Reobrix

NO.22028

MECHANICAL SK6000

A

SK6000

R/C CONTROL+

01 2.4GHZ HIGH SPEED ELECTRIC REMOTE CONTROL

PHONE CONTROL+

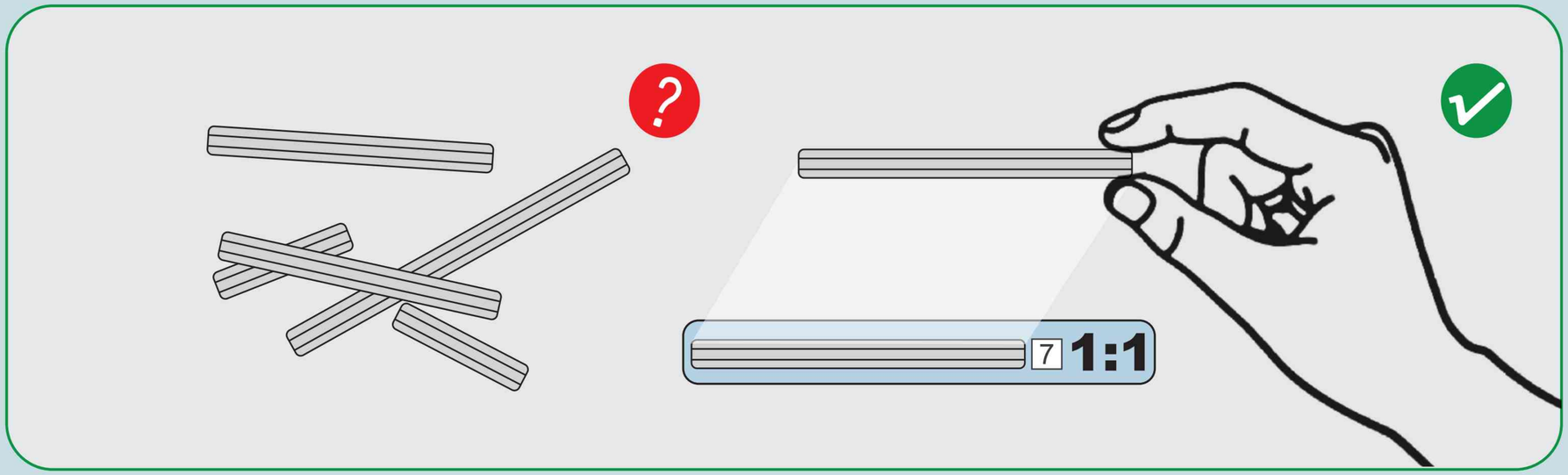
?
7
1:1

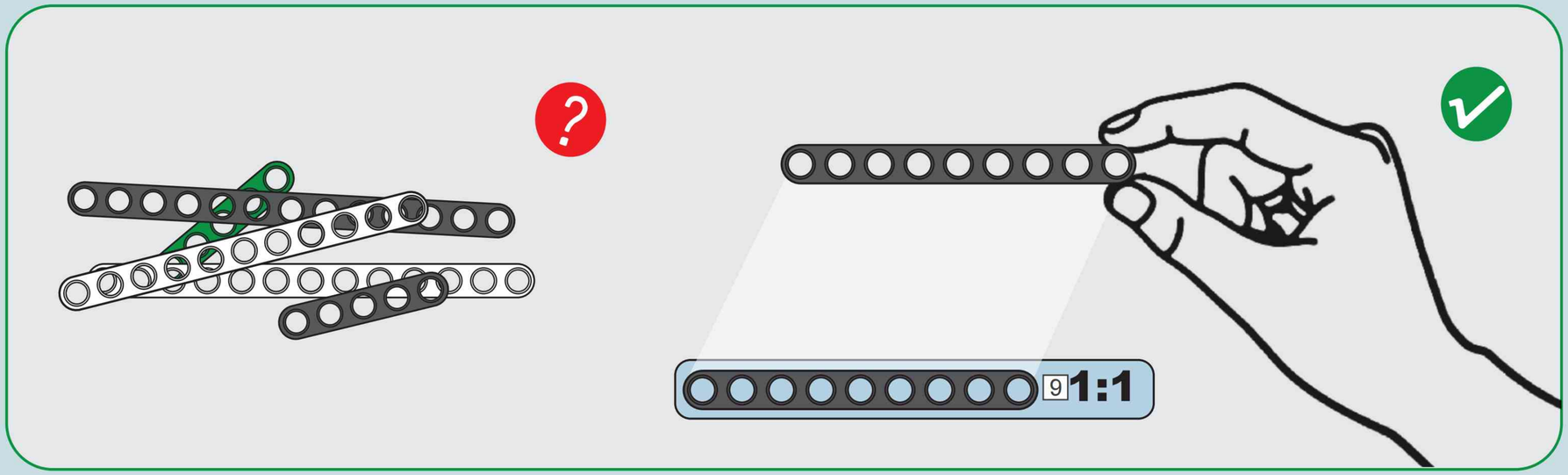
?
9
1:1



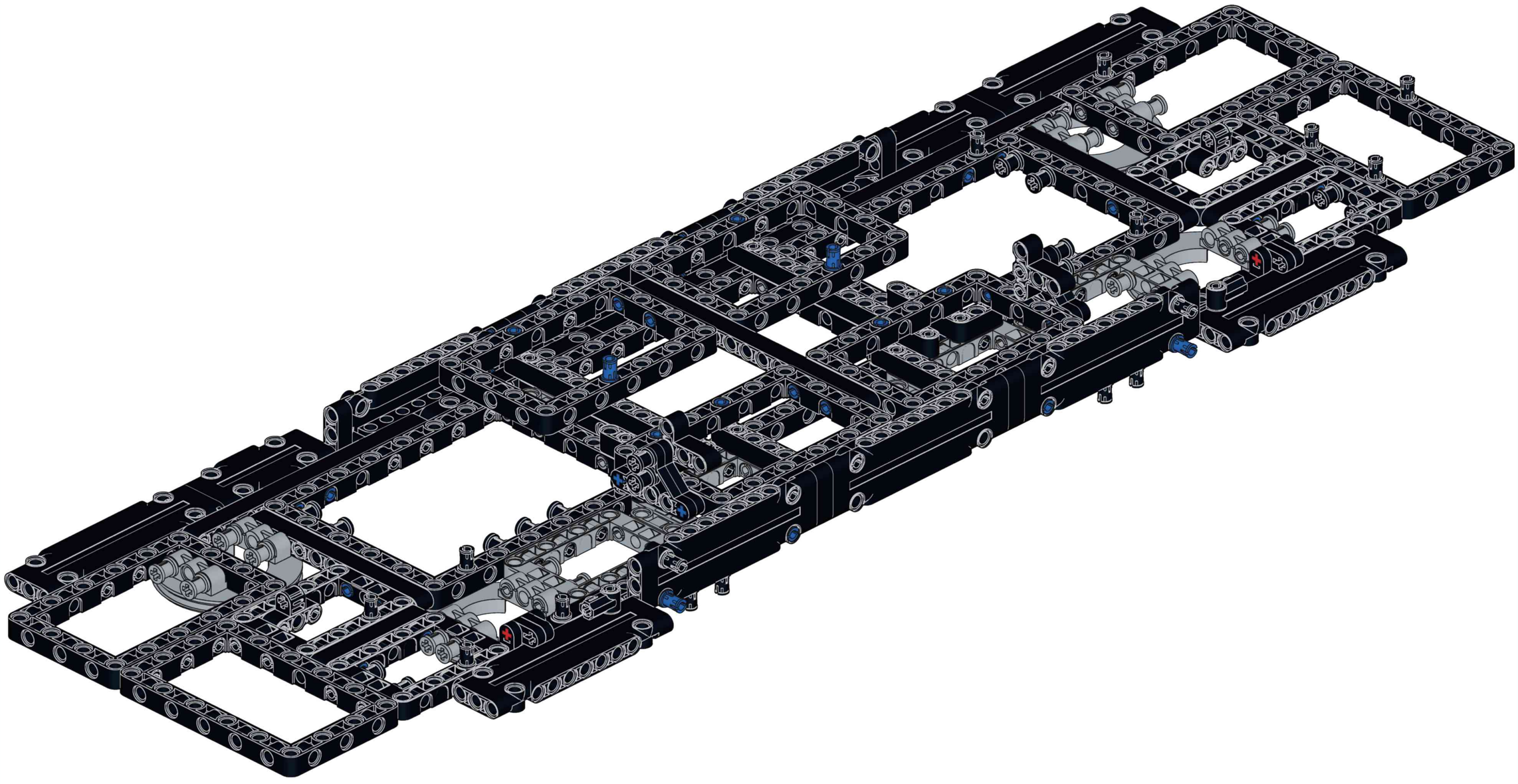

A

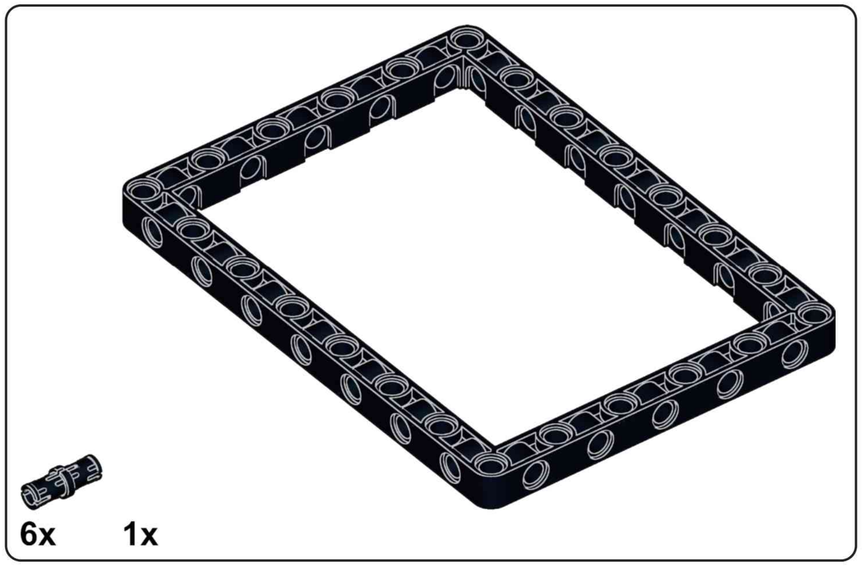

A1

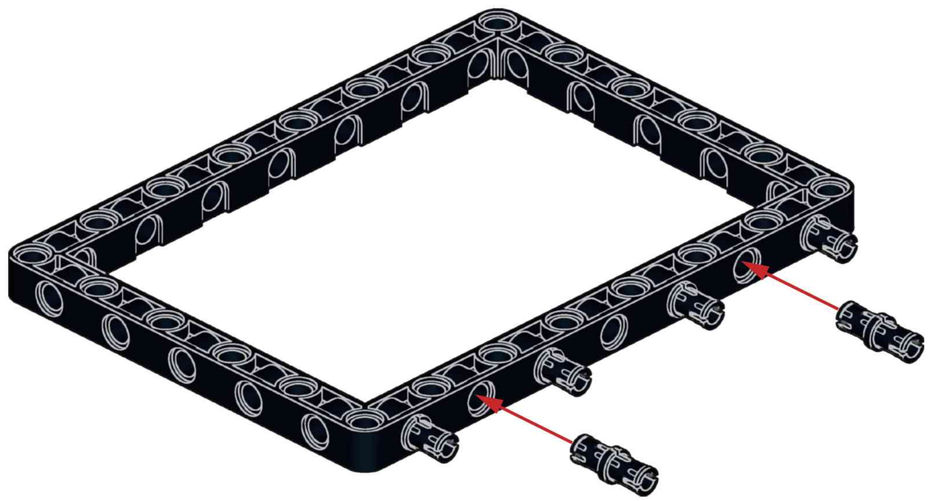

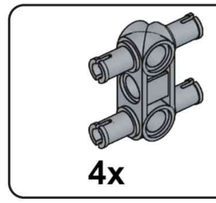

A2

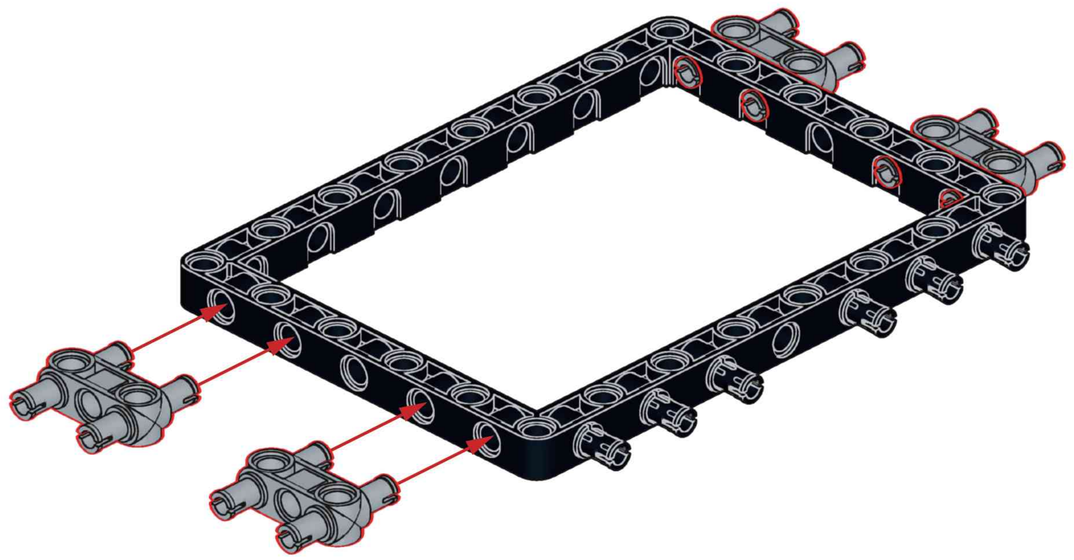

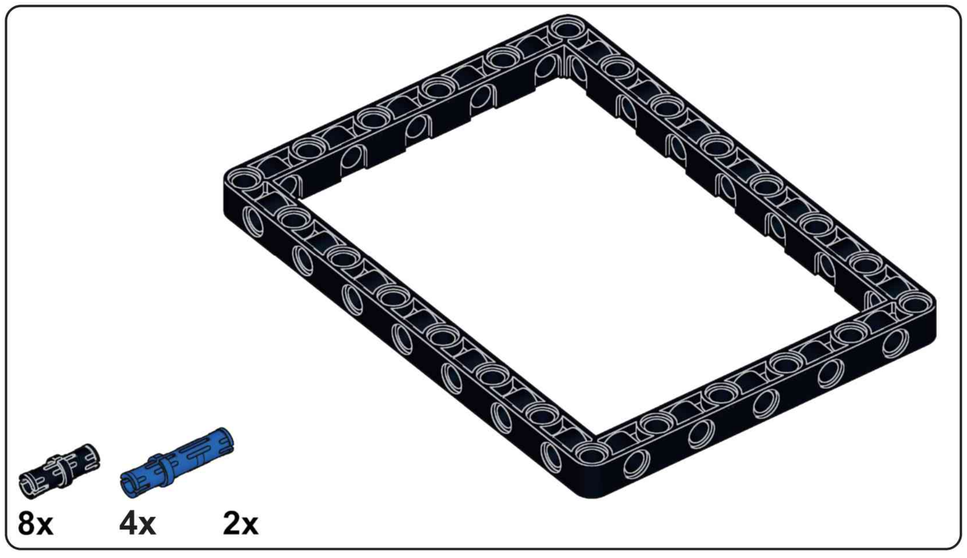

A3

2

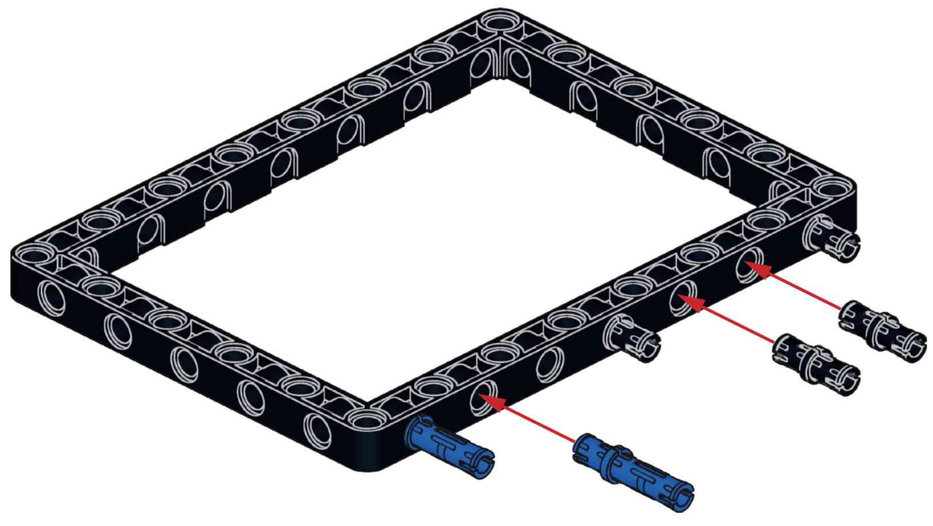

x2

12x

A4

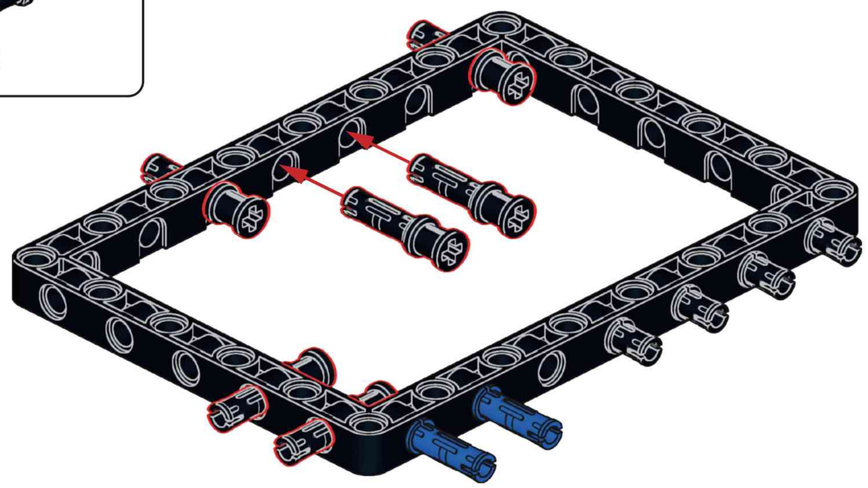

x2

4x



2x

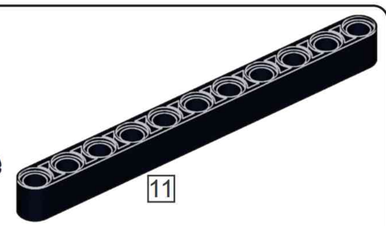

A5

x2

A6

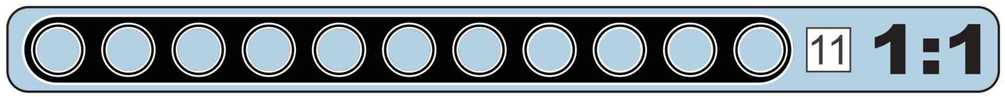

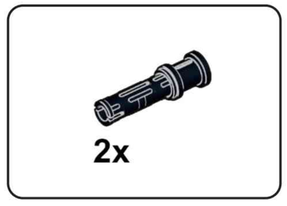

A7

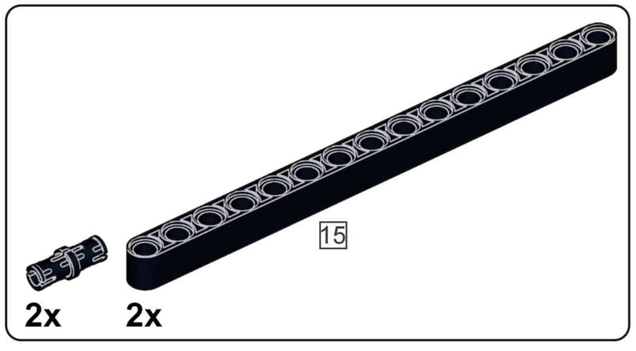

A8

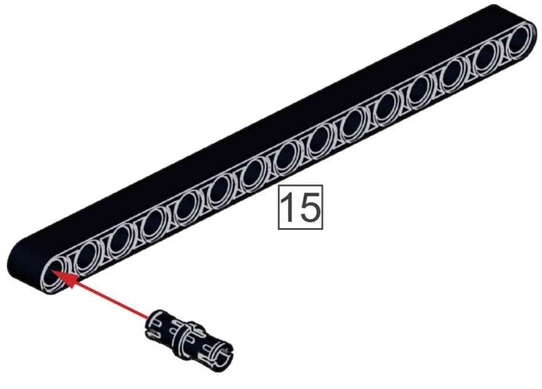

x2

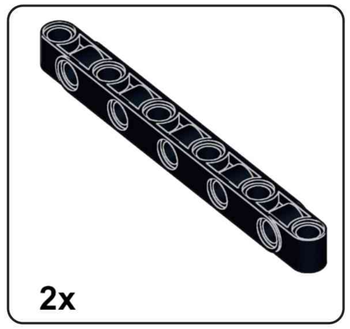

A9

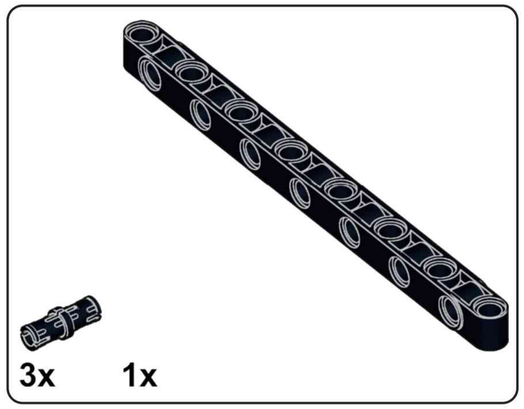

A10

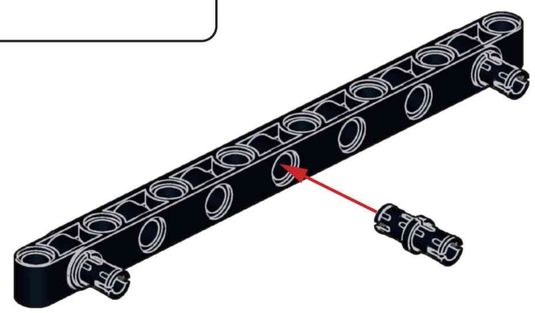

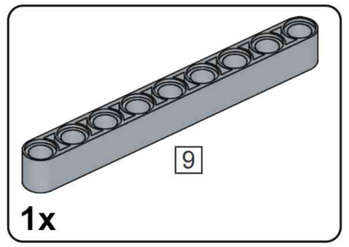

A11

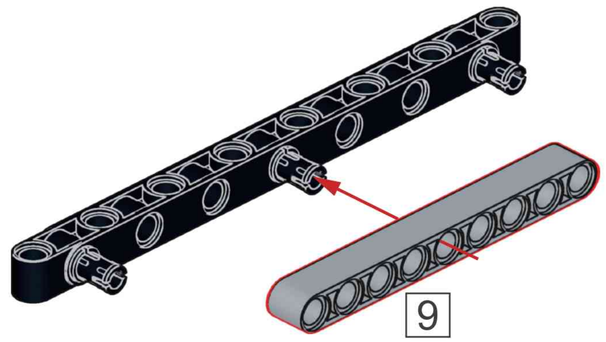

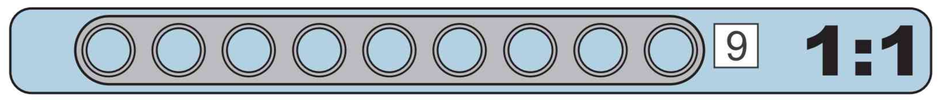

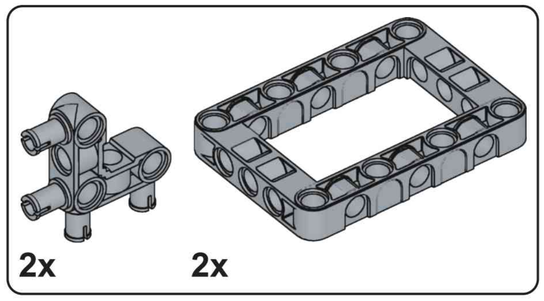

A12

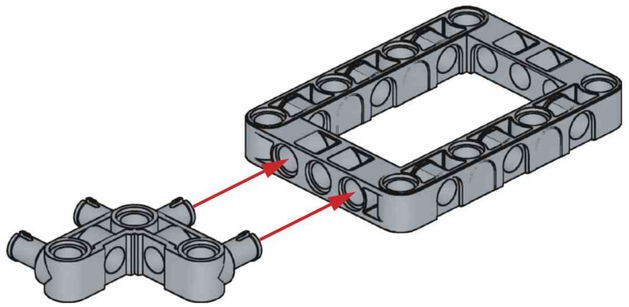

x2

A13

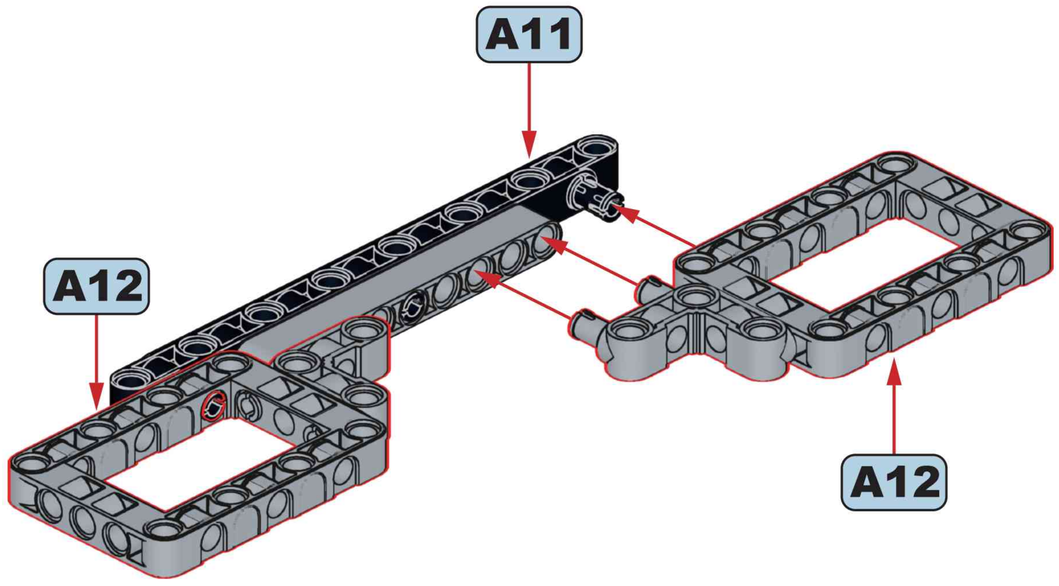

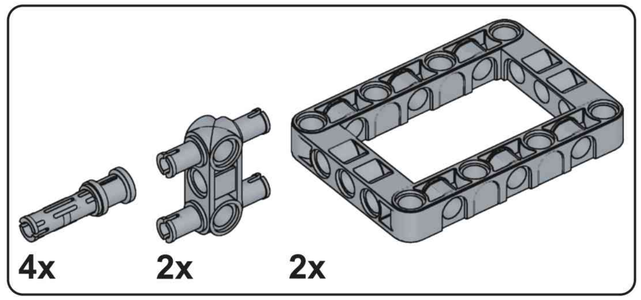

A14

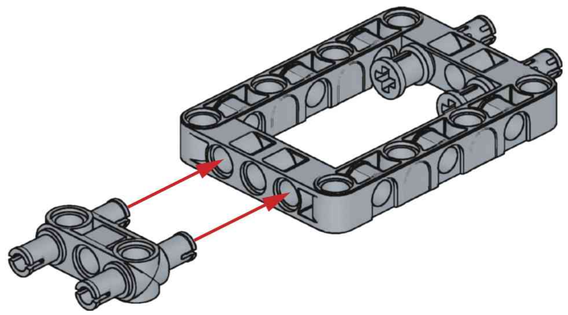

x2

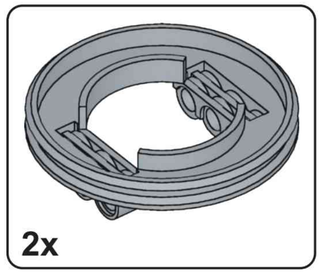

A15

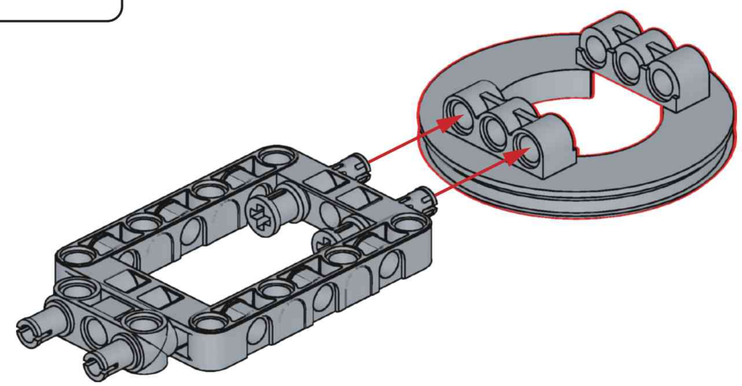

x2

A16

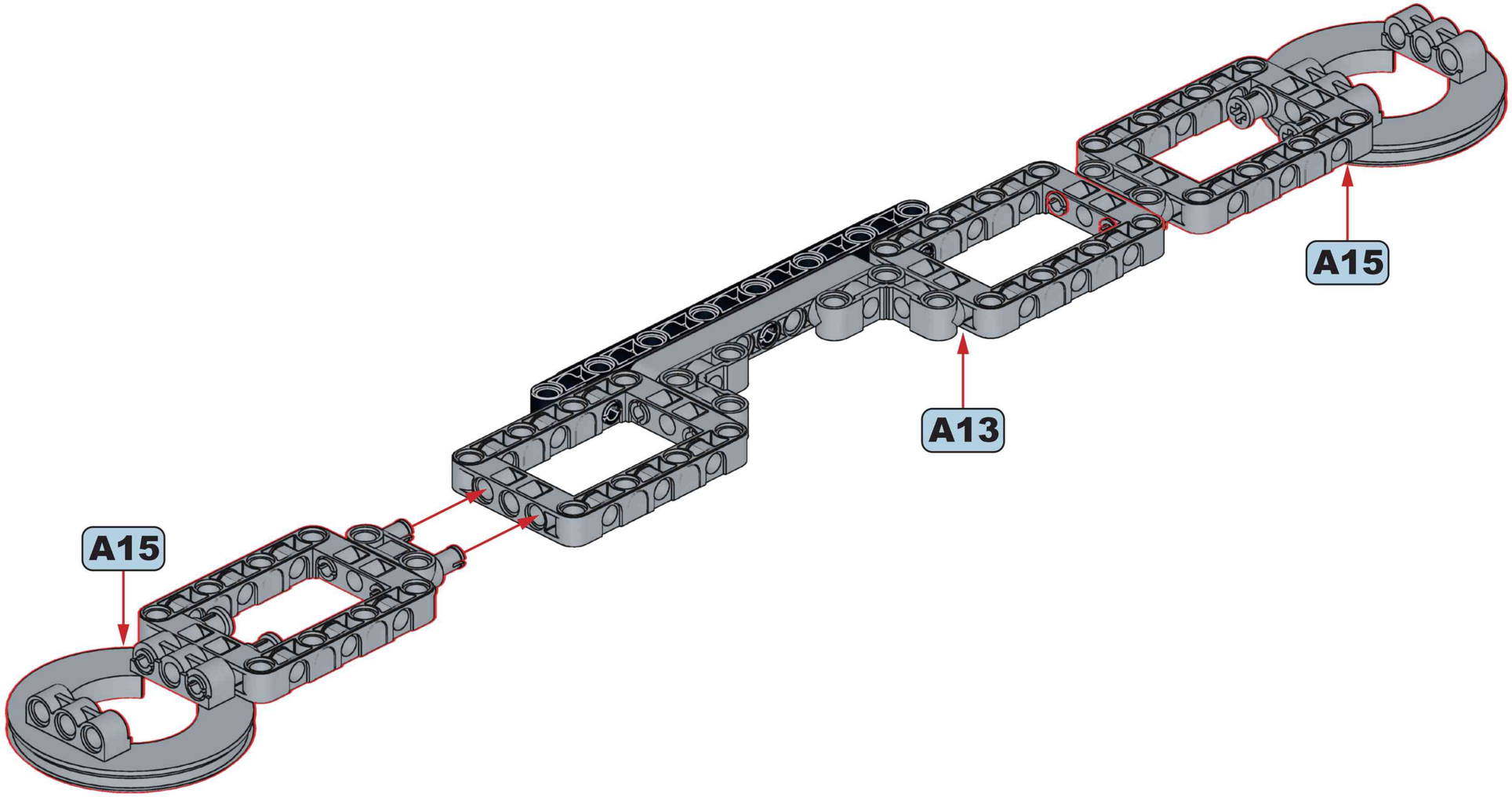

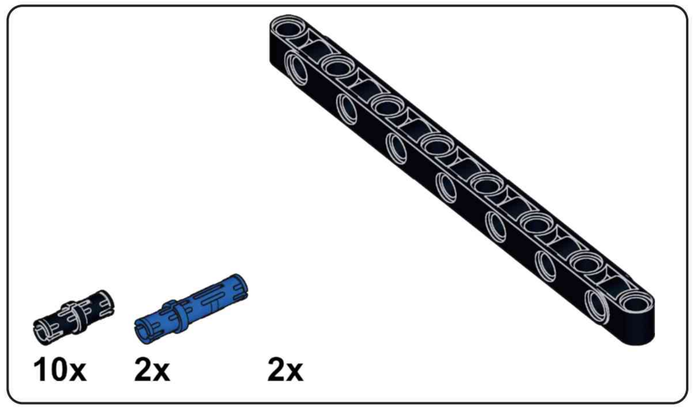

A17

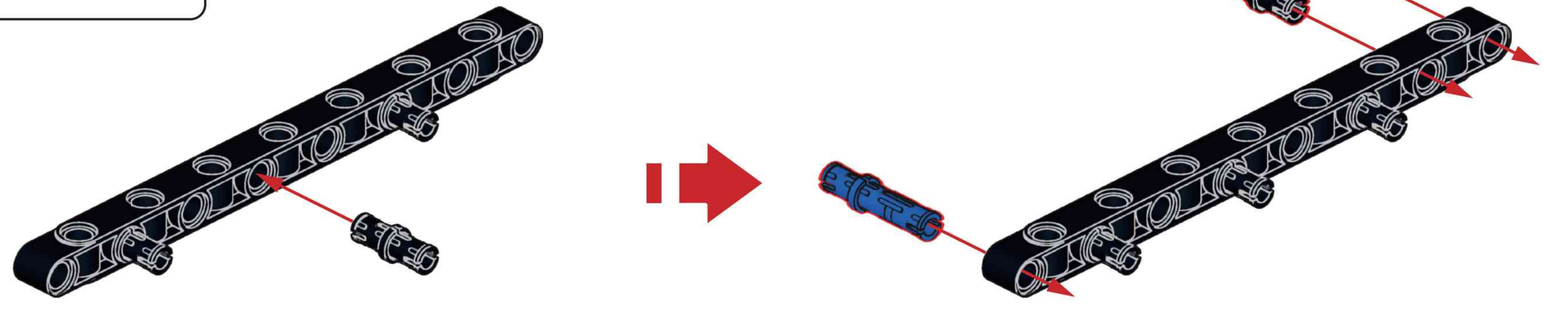

x2

A18

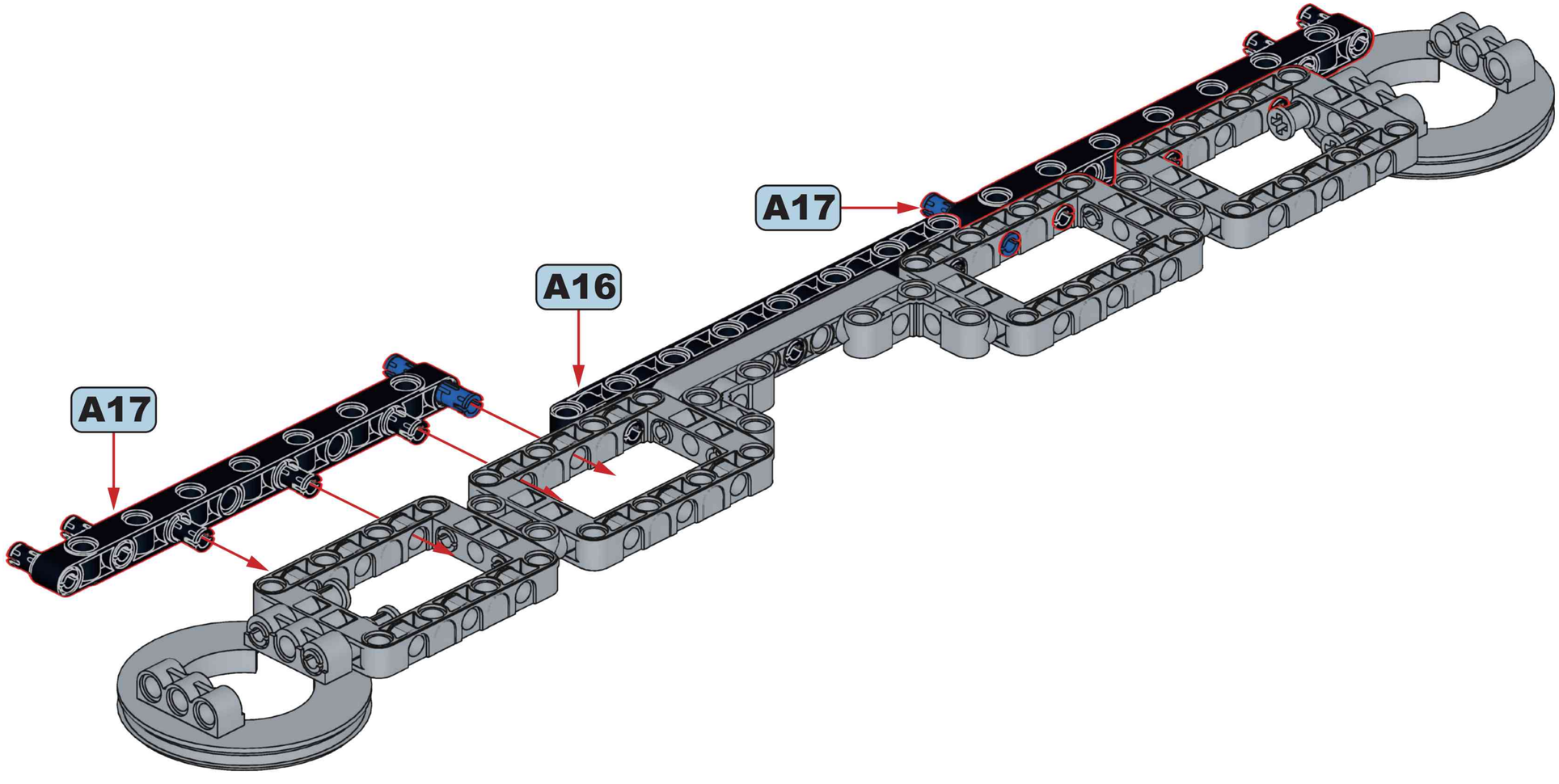

A19

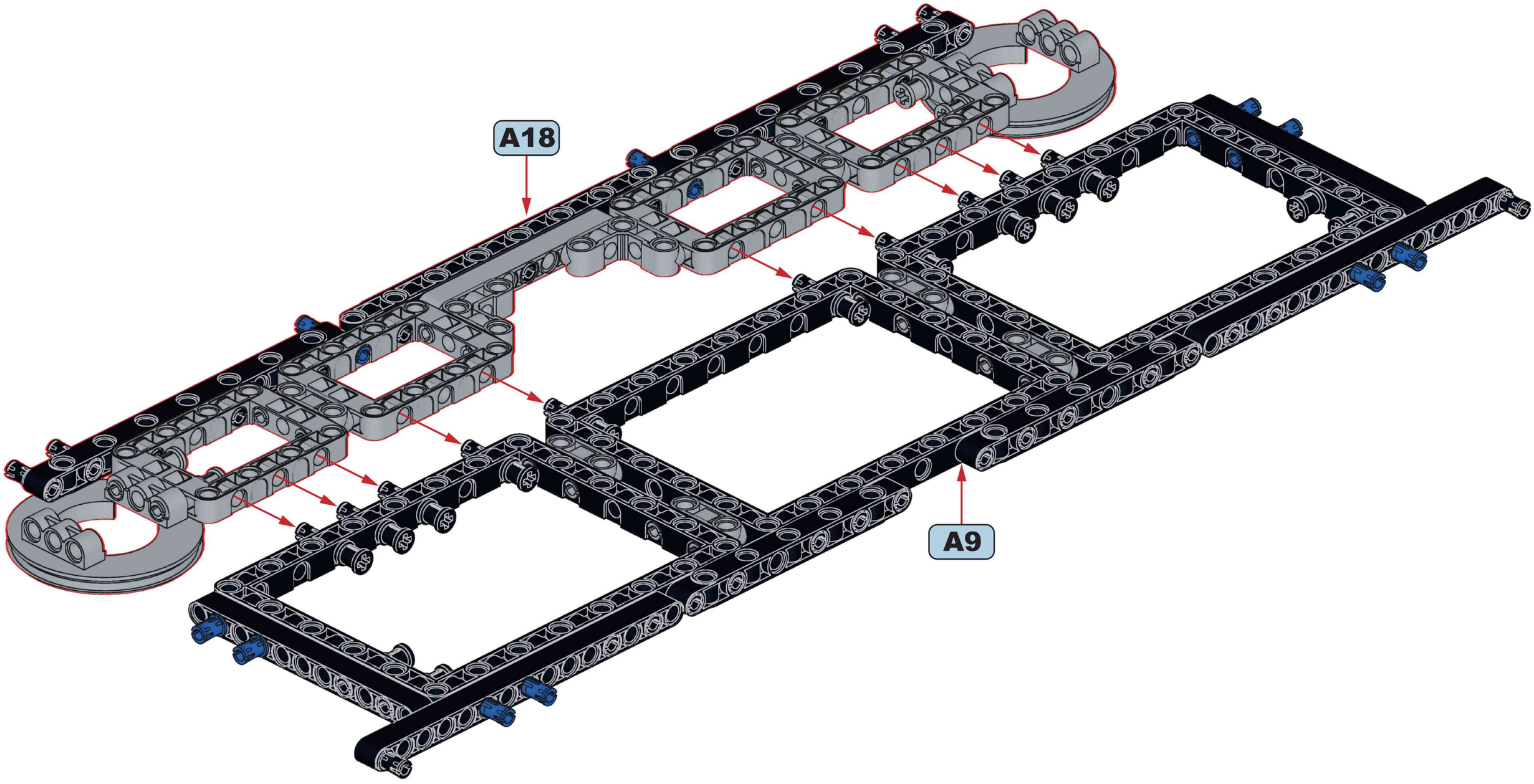

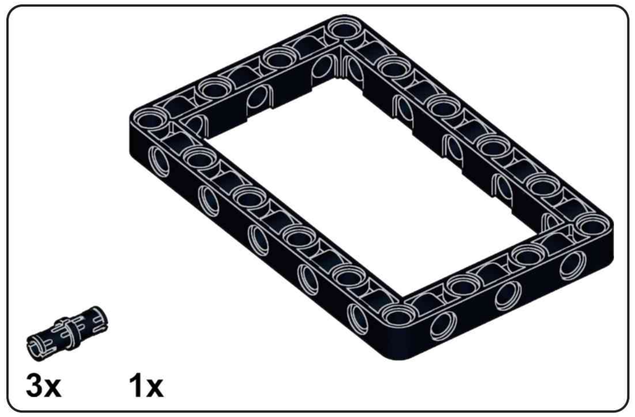

A20

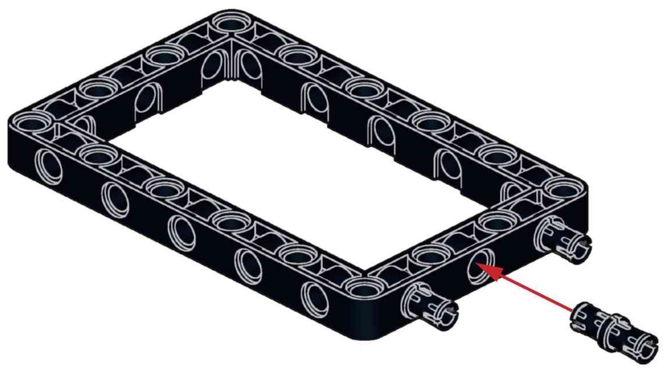

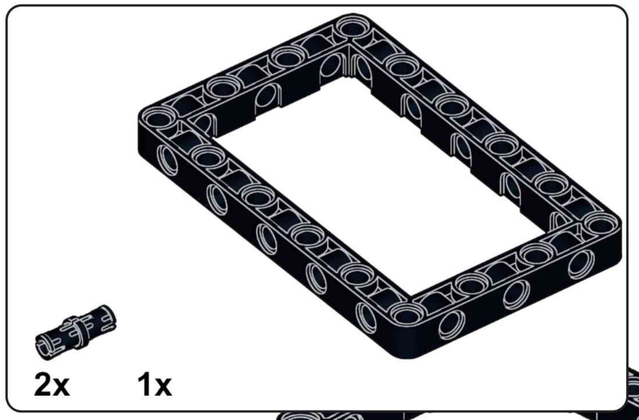

A21

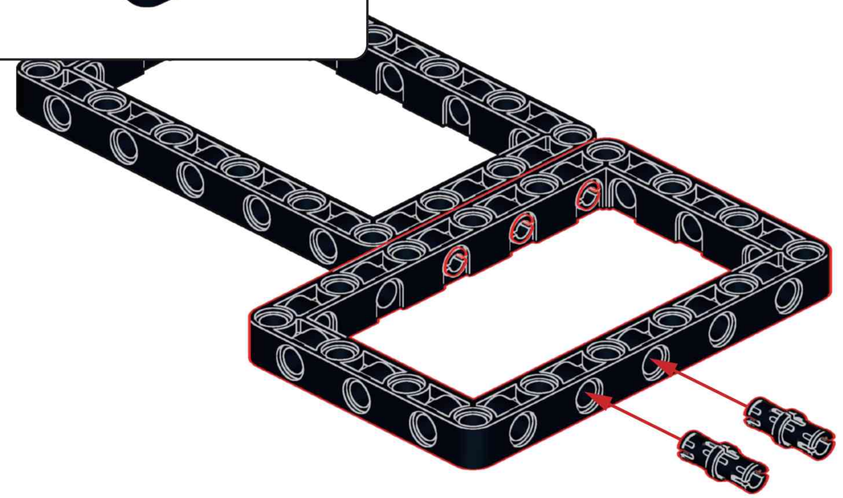

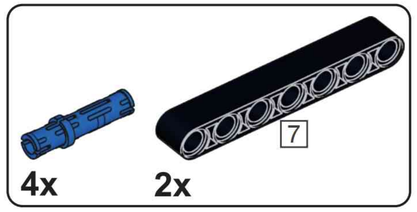

A22

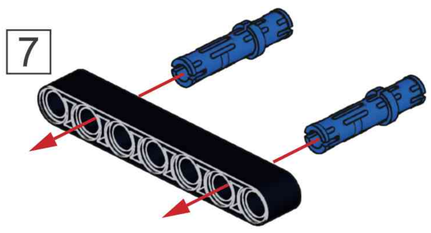

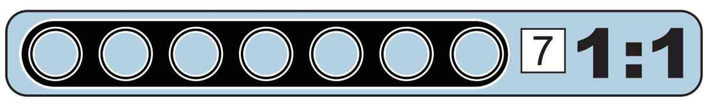

x2

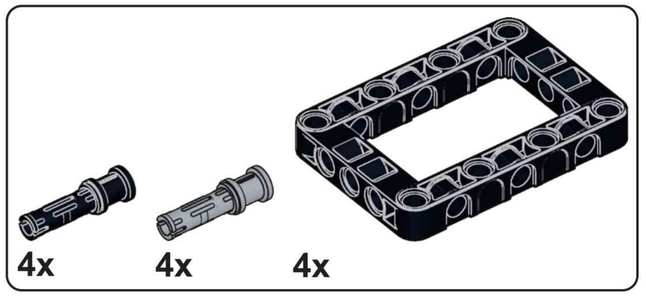

A23

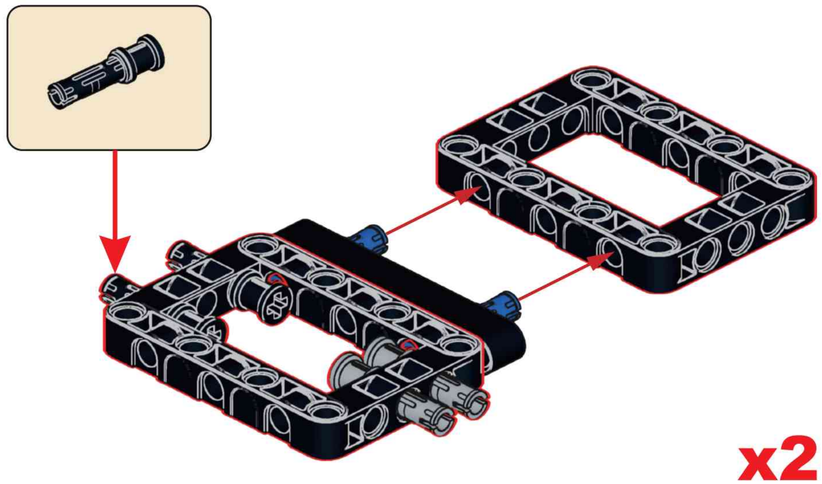

x2

6x

A24

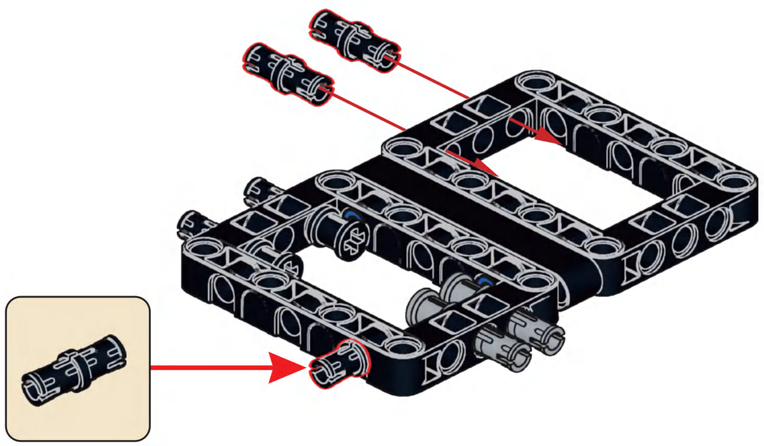

x2

2x 1x

A25

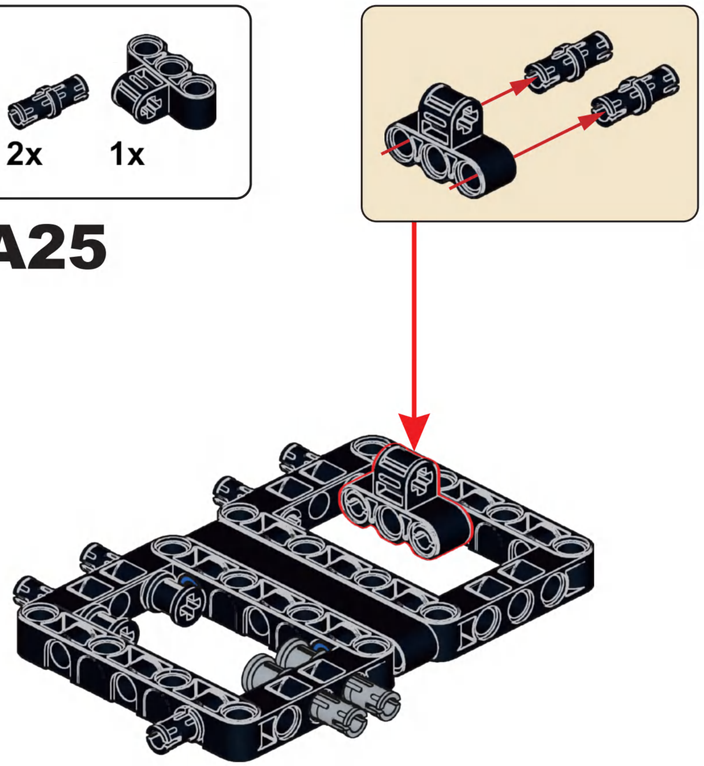

2x 1x

A26

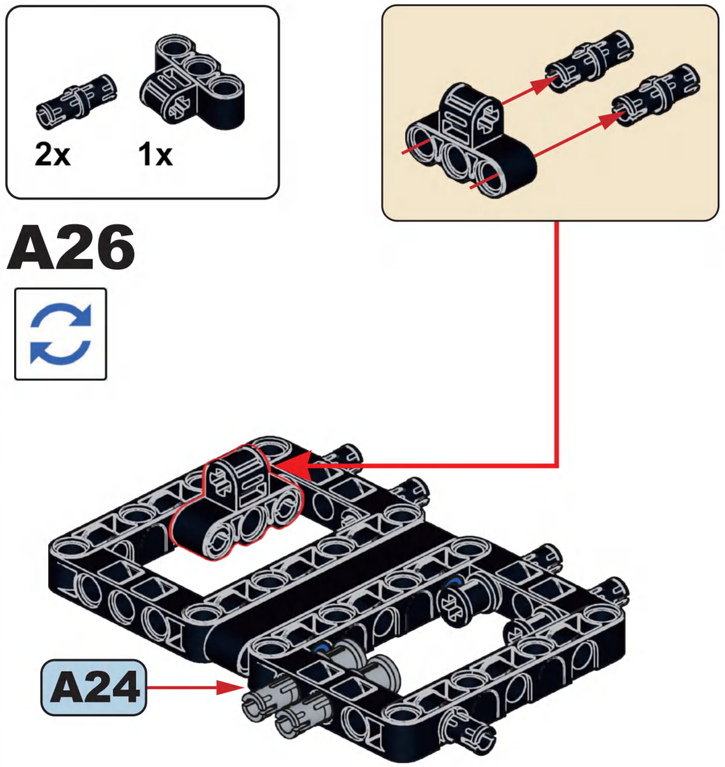

A27

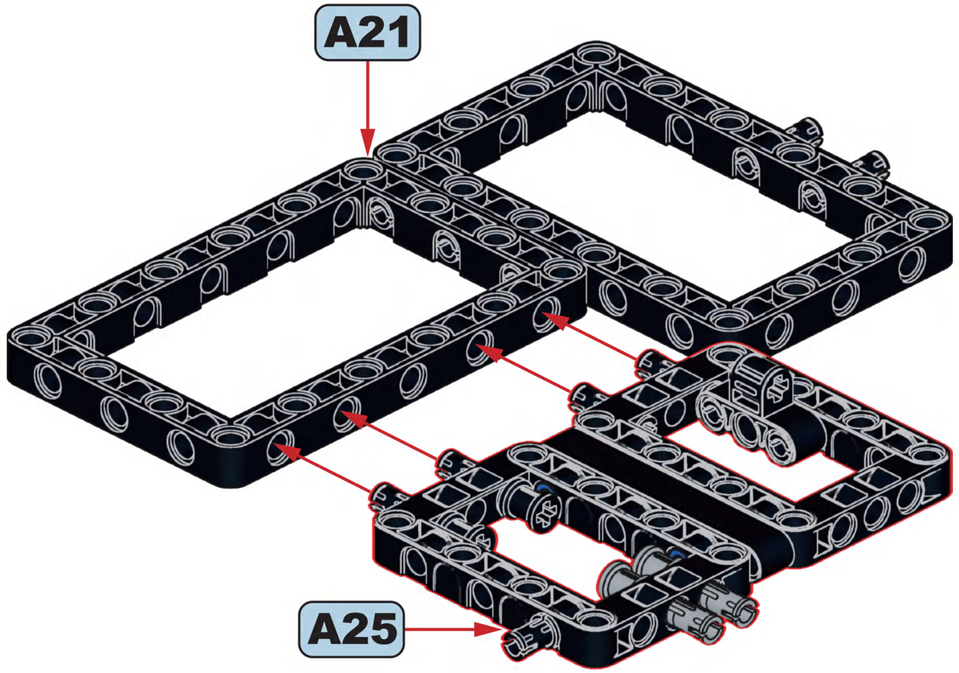

4x 1x

A28

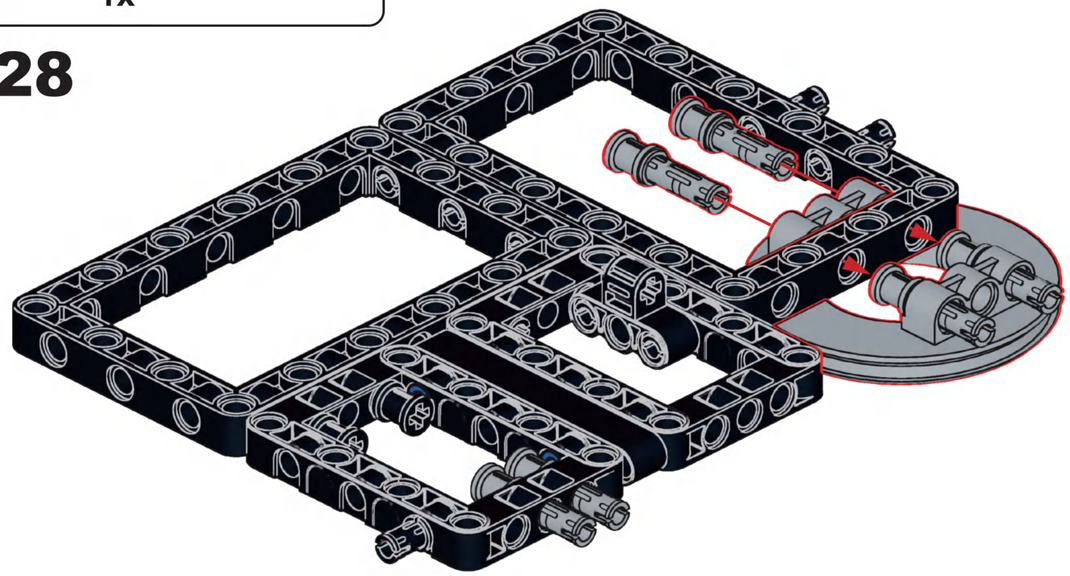

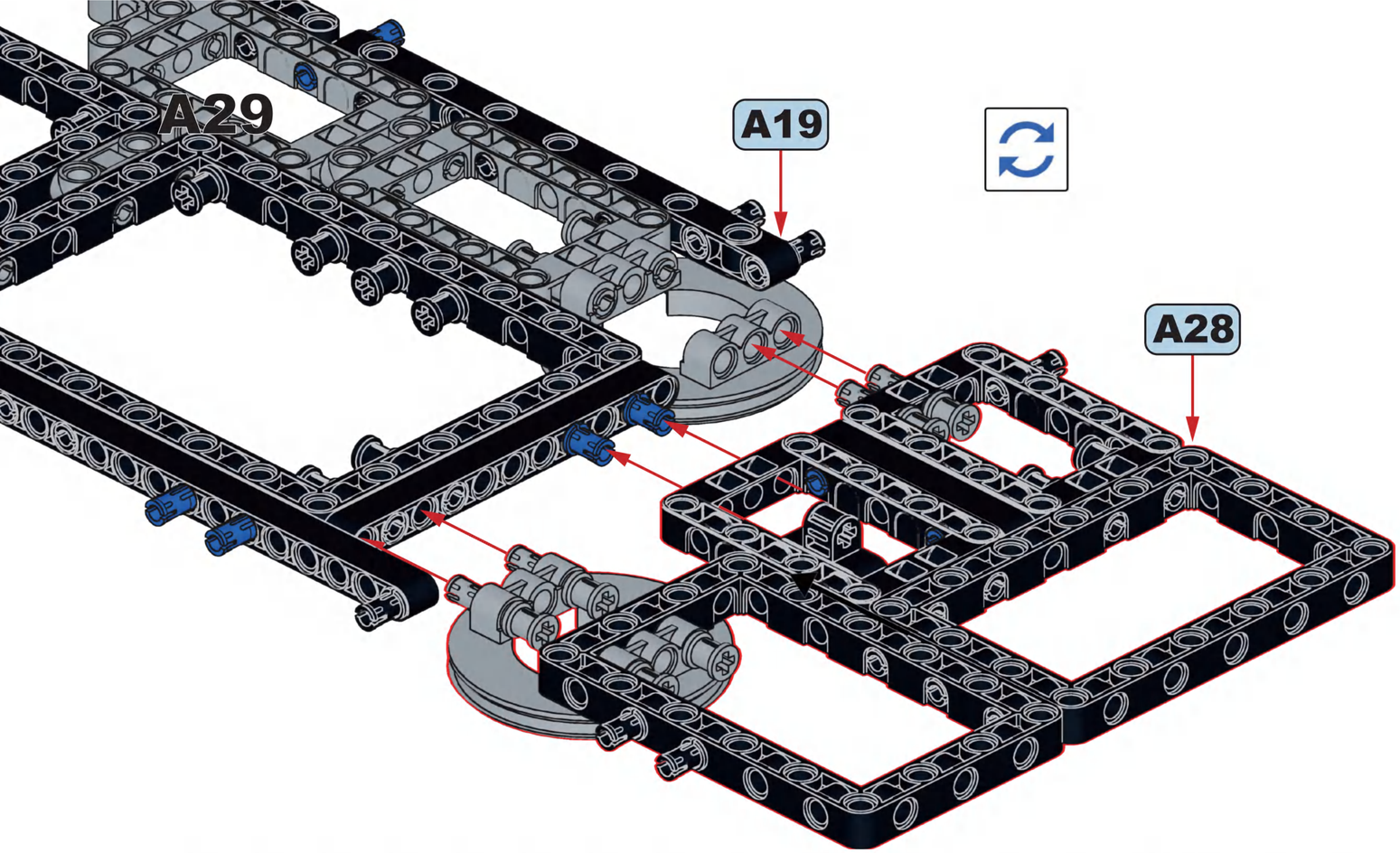

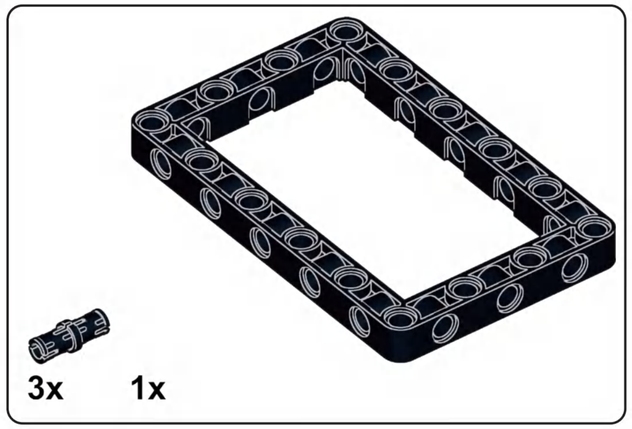

A30

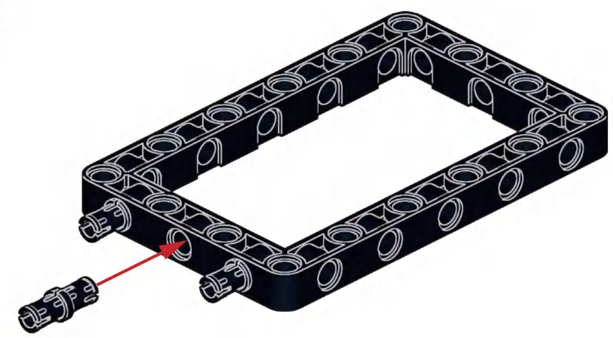

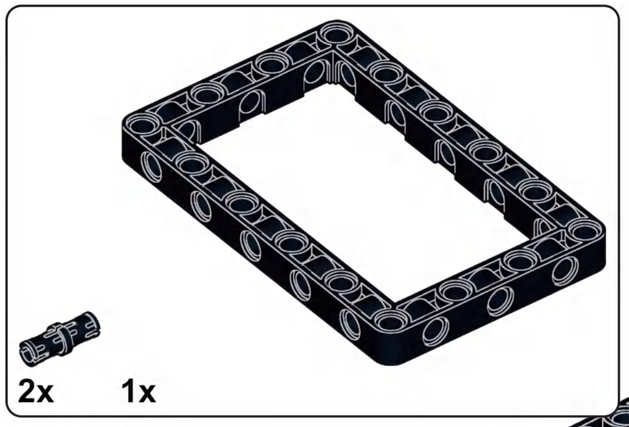

A31

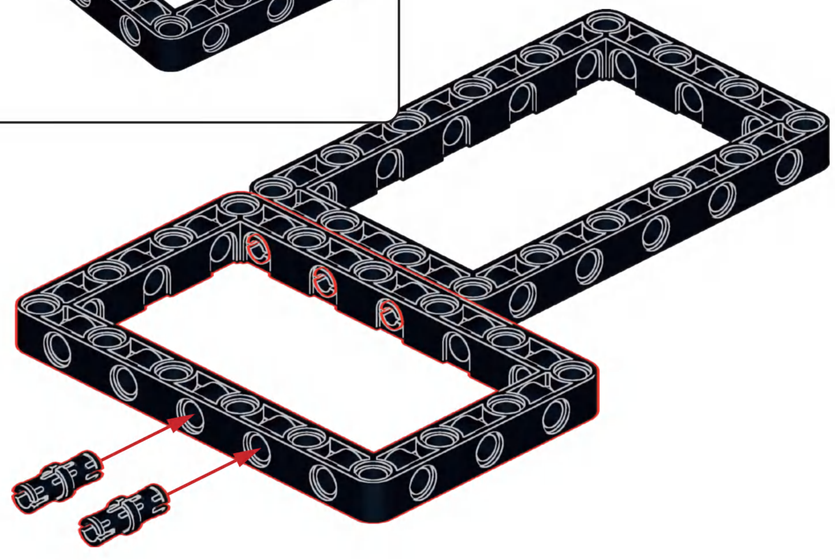

A32

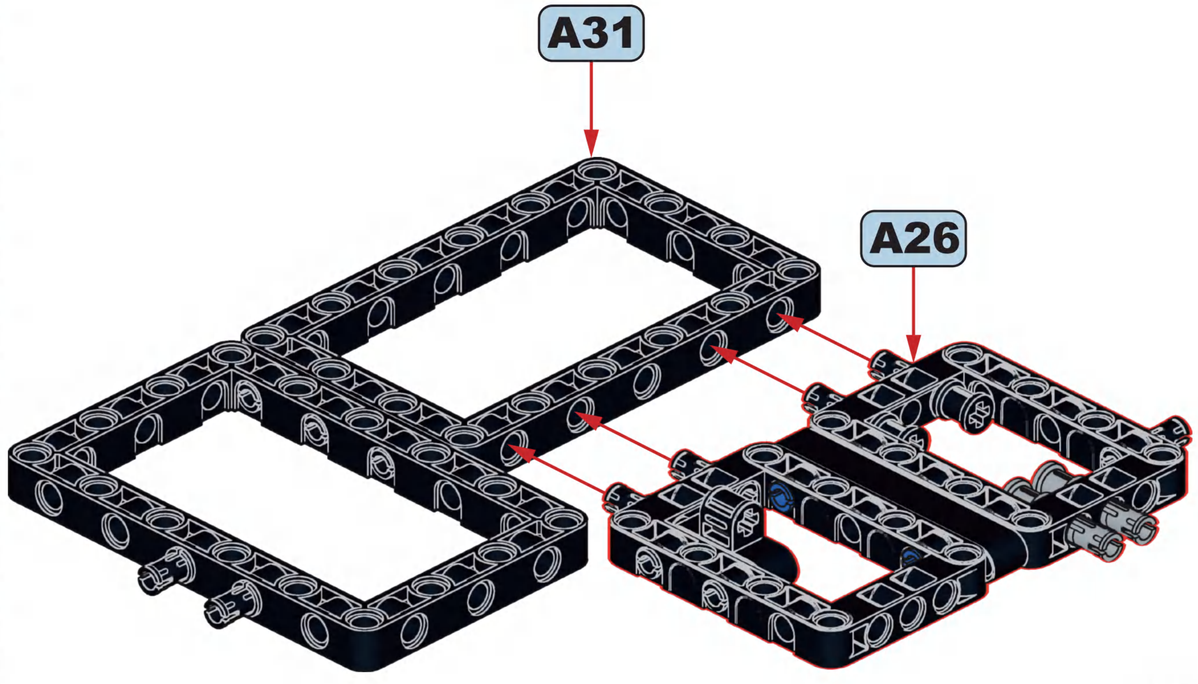

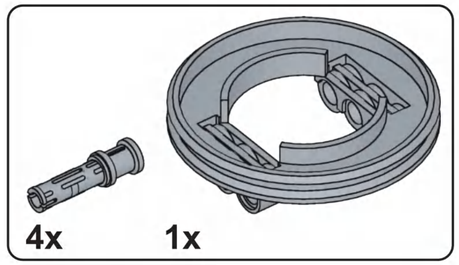

A33

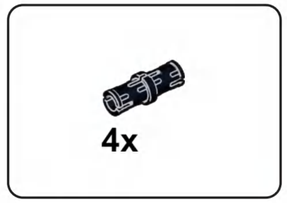

A34

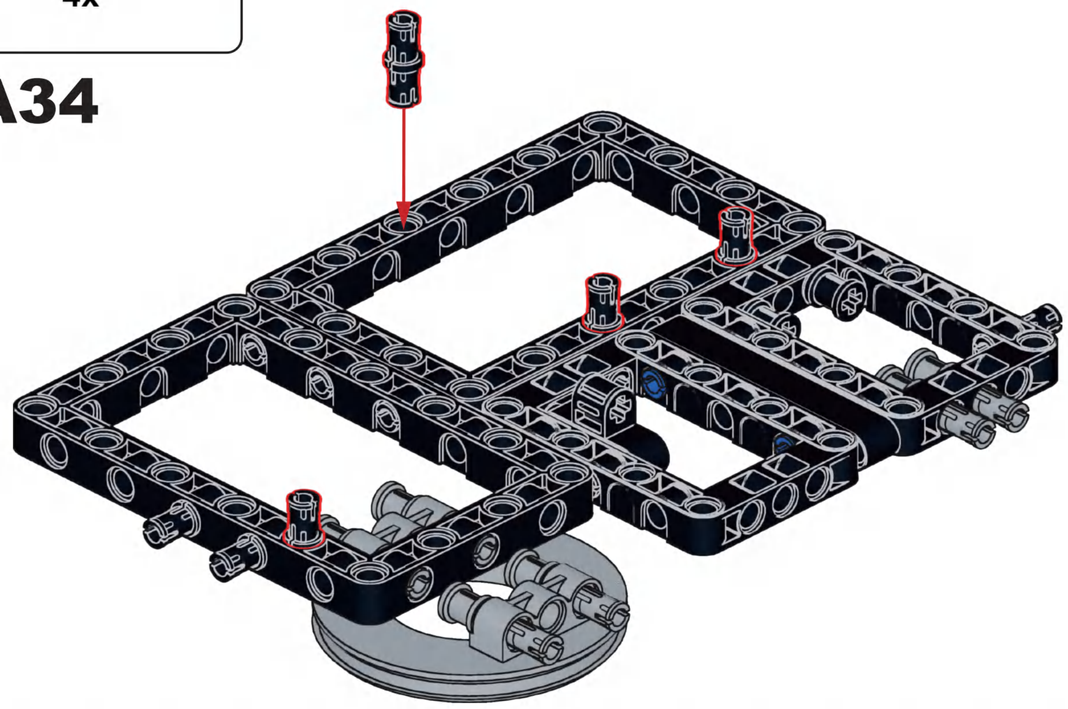

A35

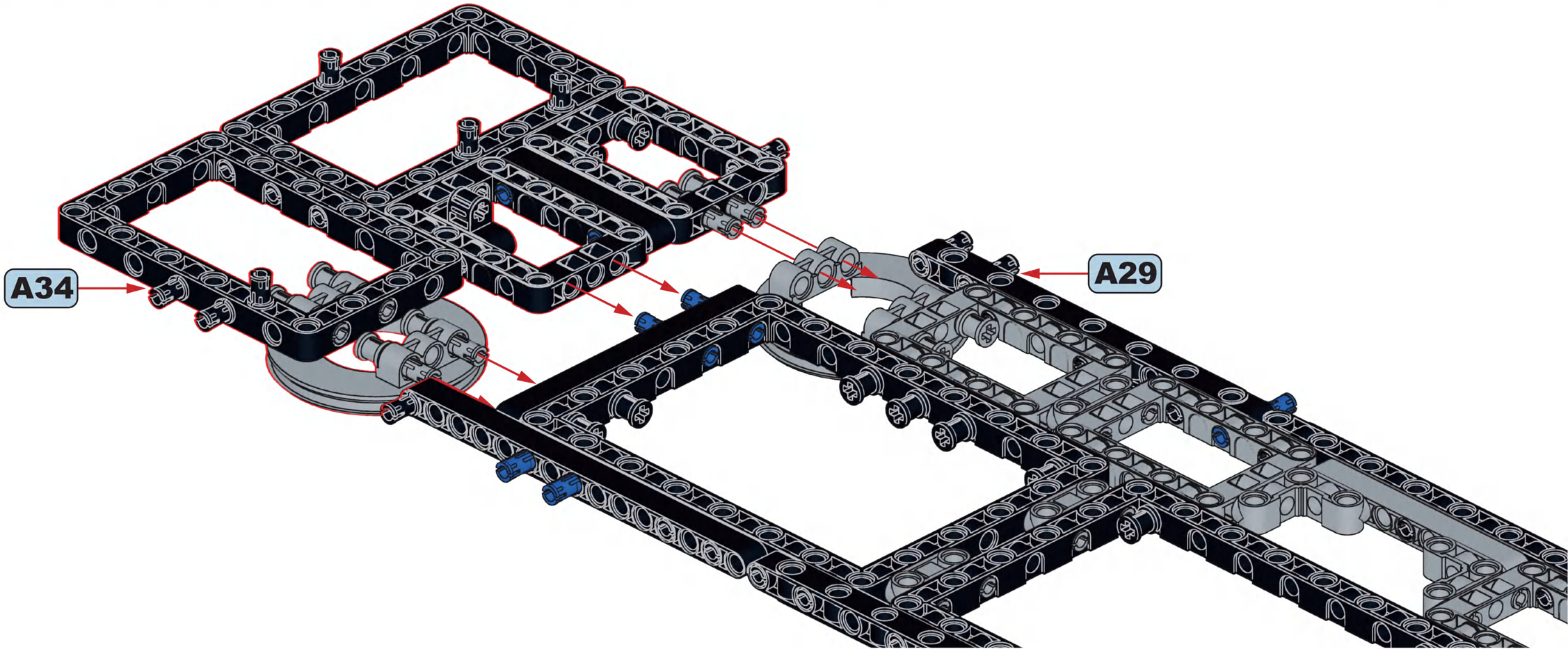

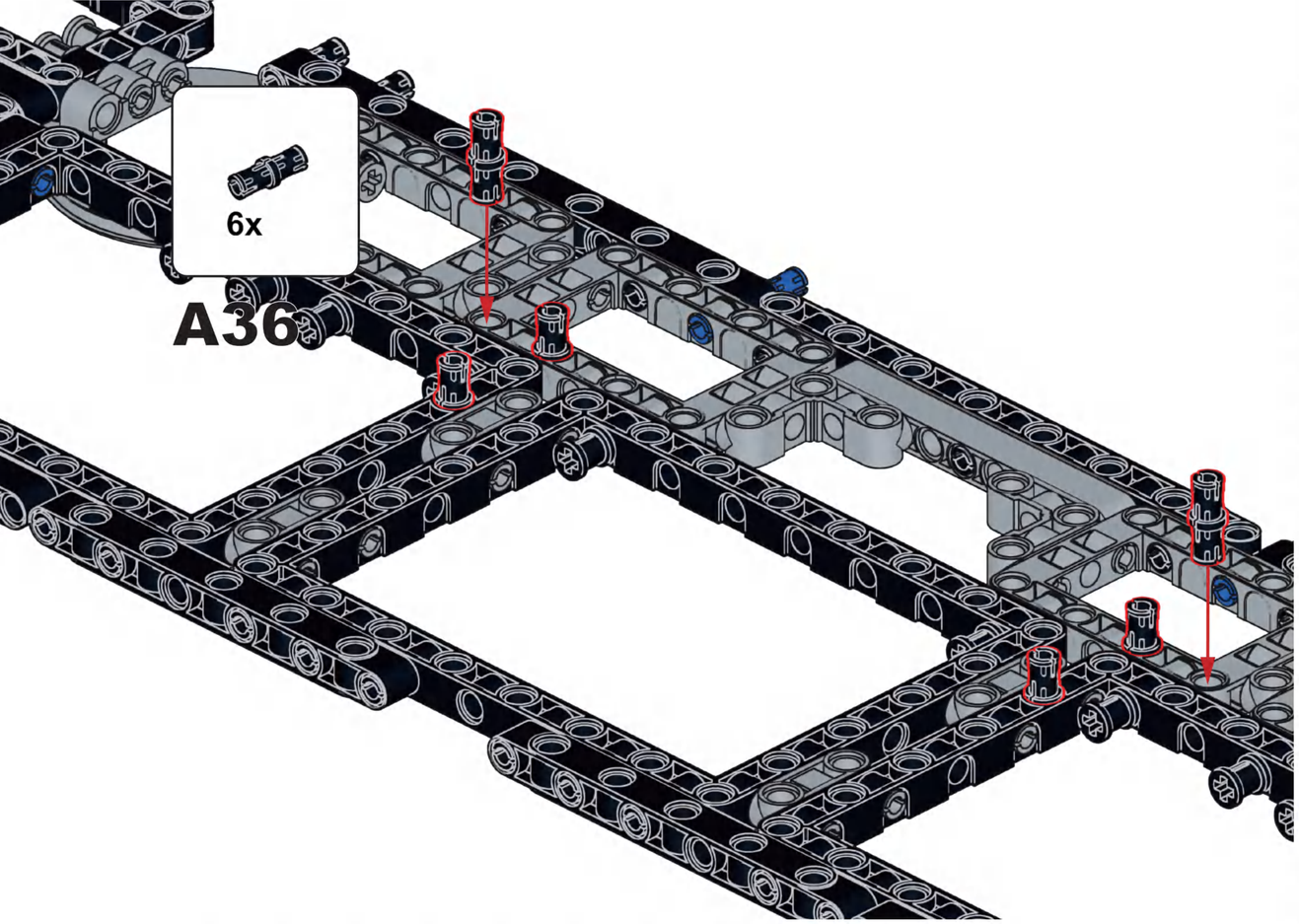
6x
A36

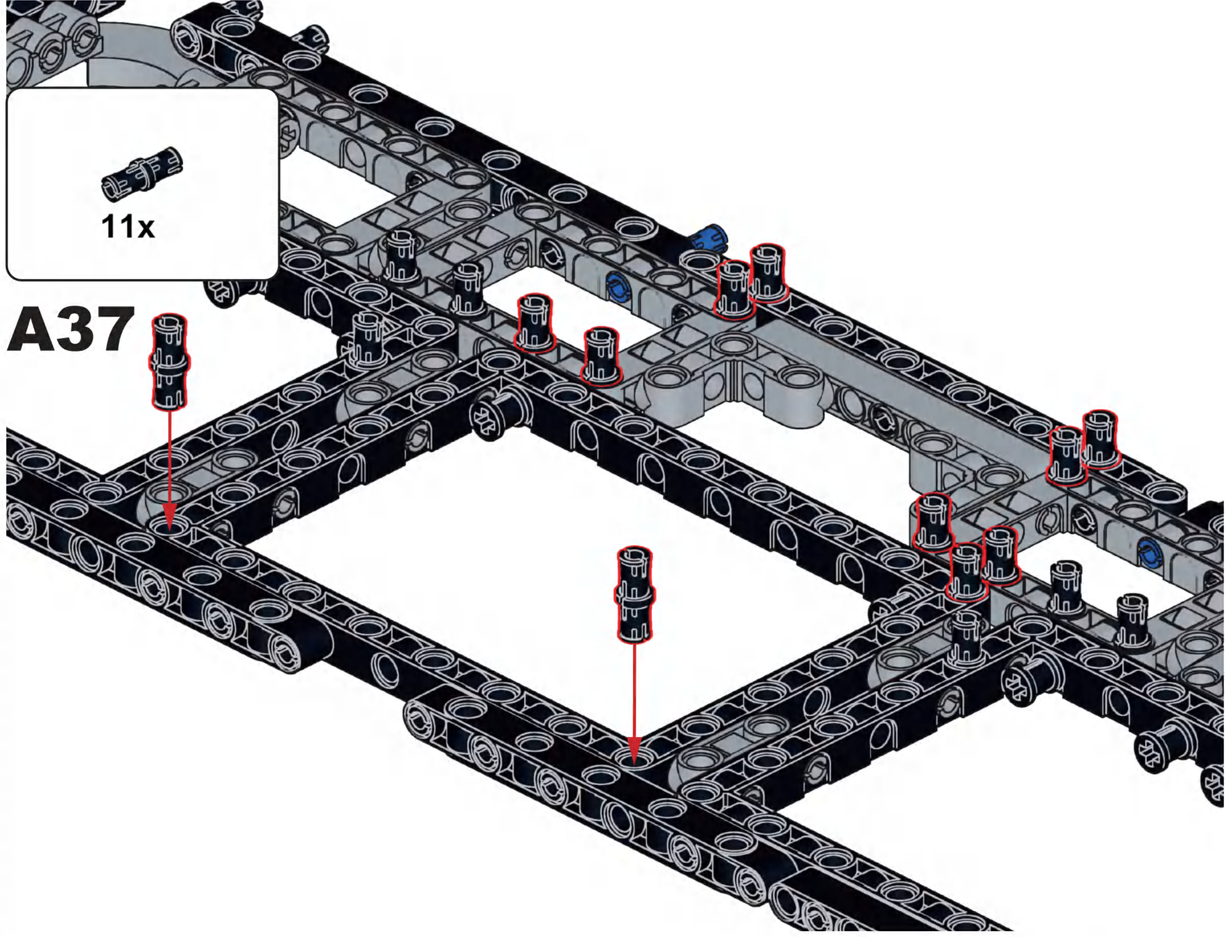
11x
A37

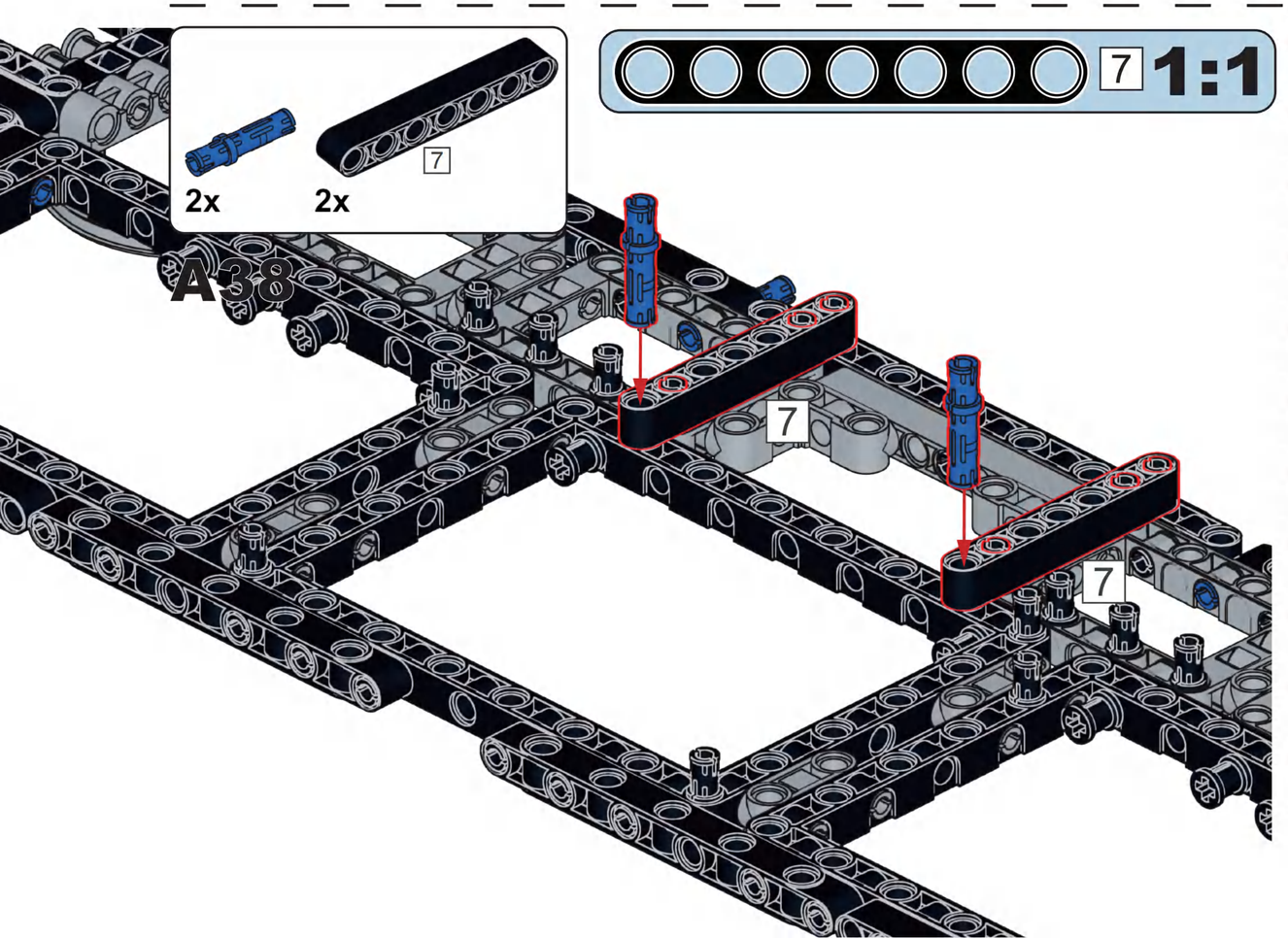
2x
2x
7
7
1:1
A38
7
7

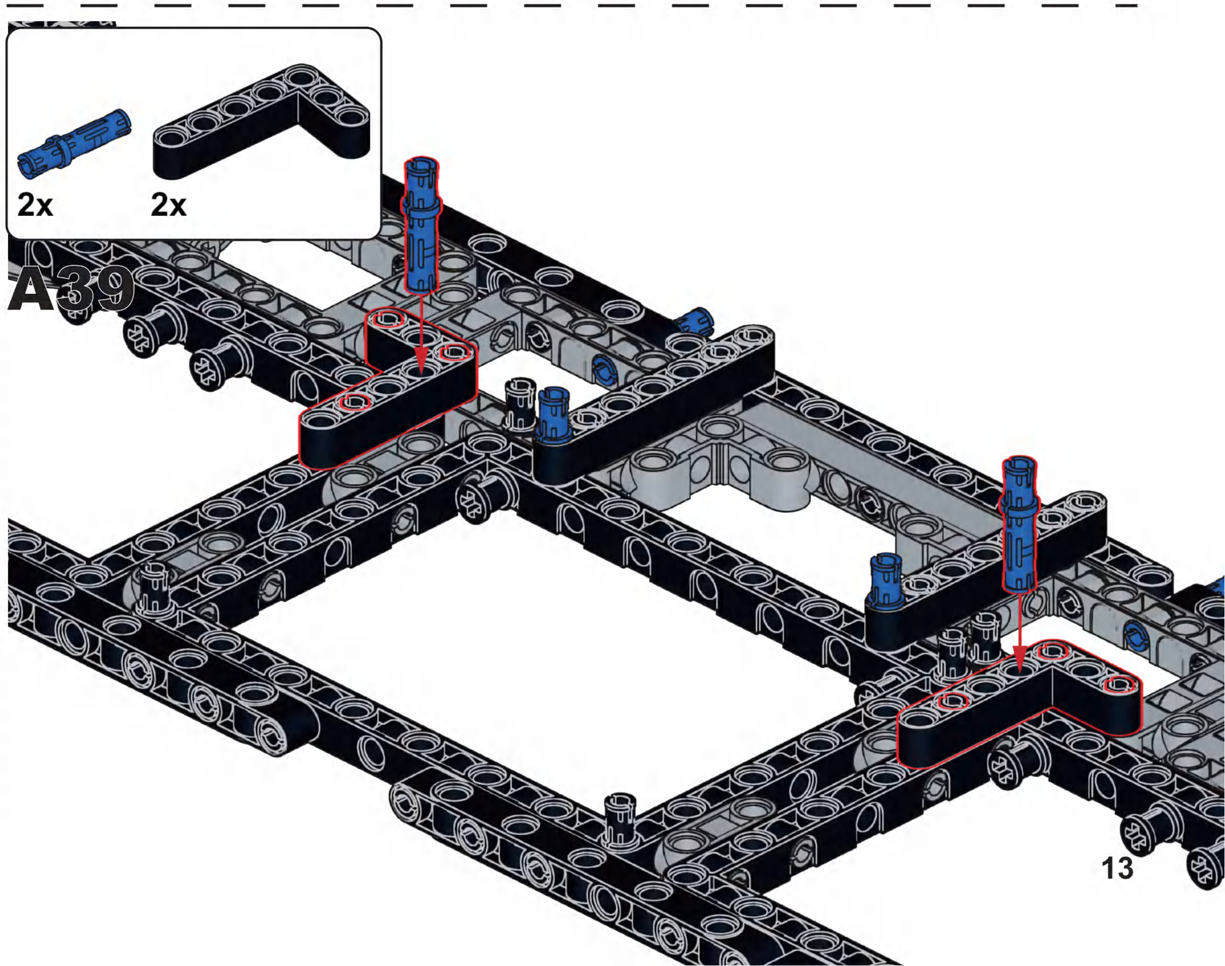
2x
2x
A39

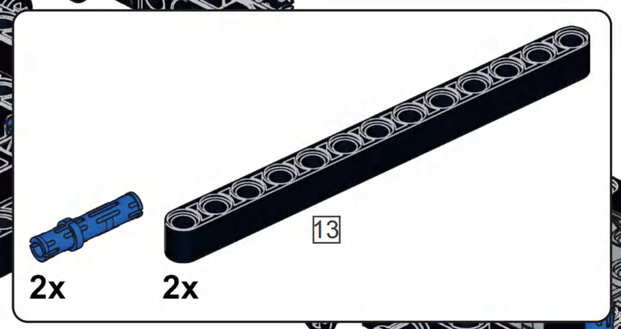

A40

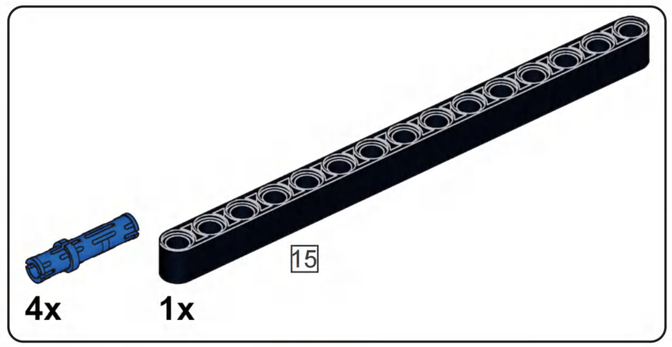

A41

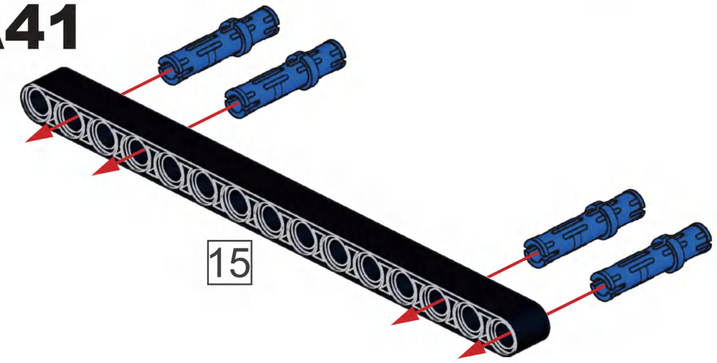

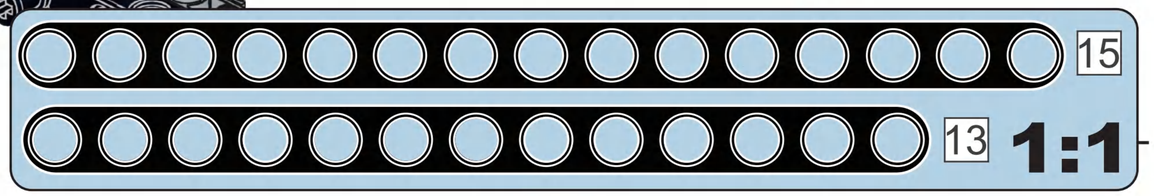

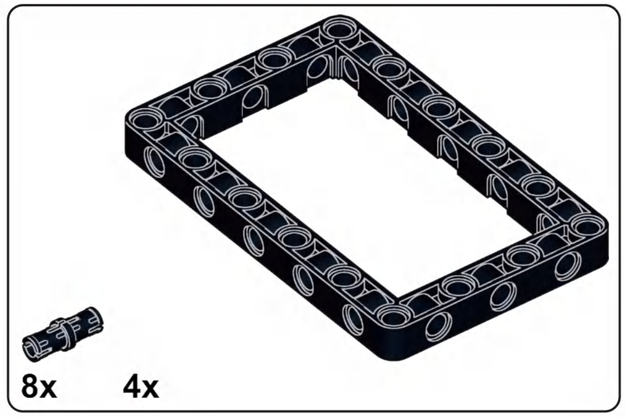

A42

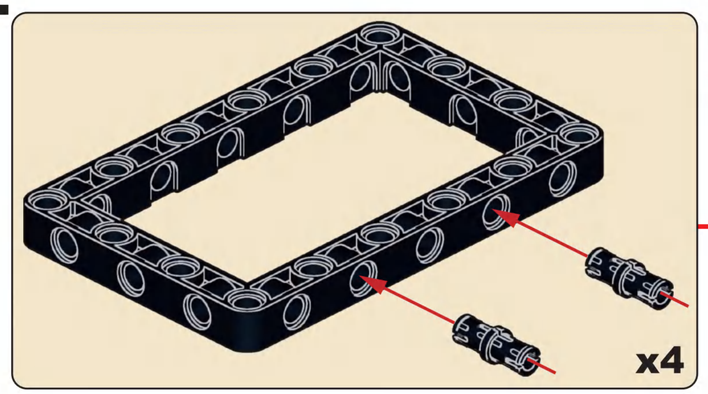

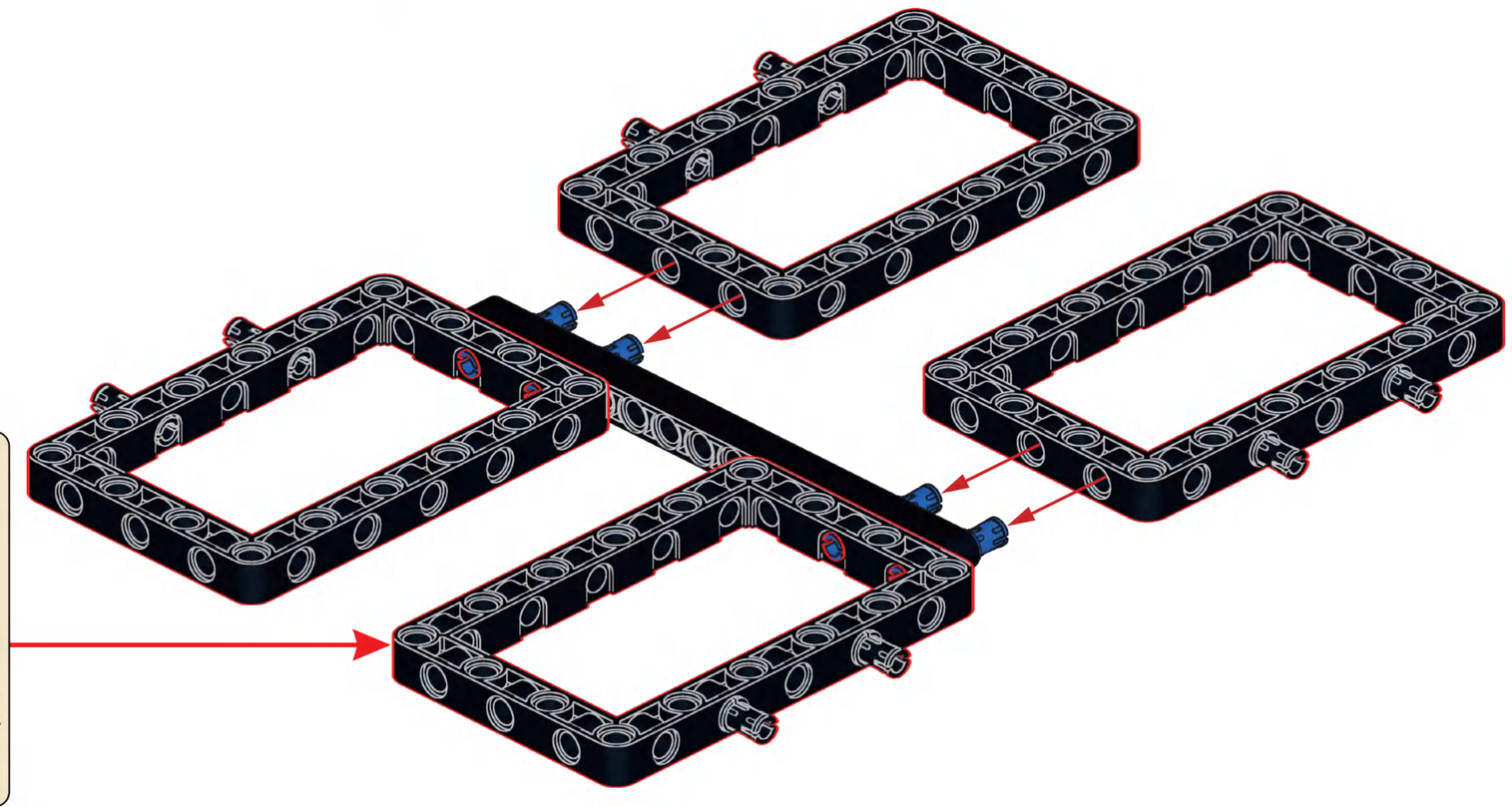

4x 4x 2x 4x

A43

1

2

A44

A43

A40

2x

A45

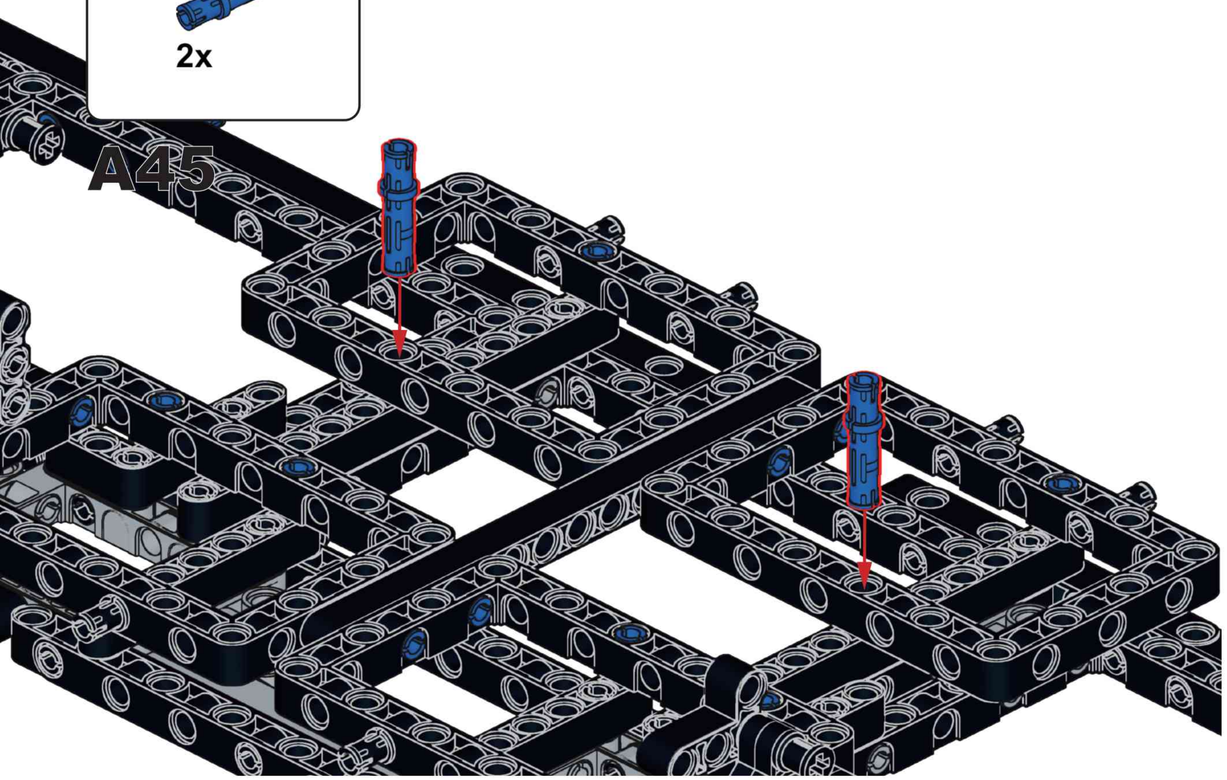

4x 2x 1x

A46

x2

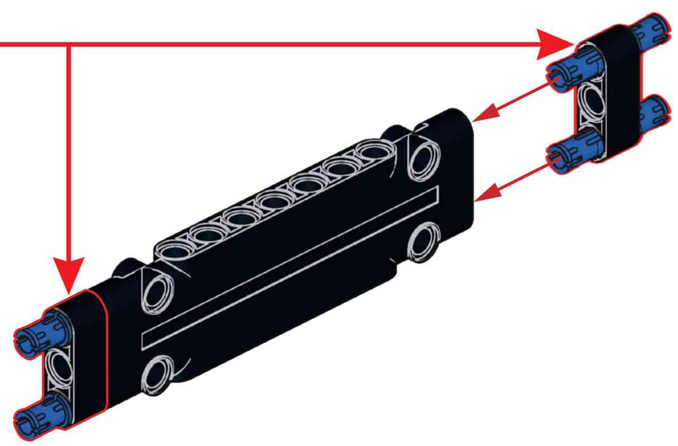

2x 2x

A47



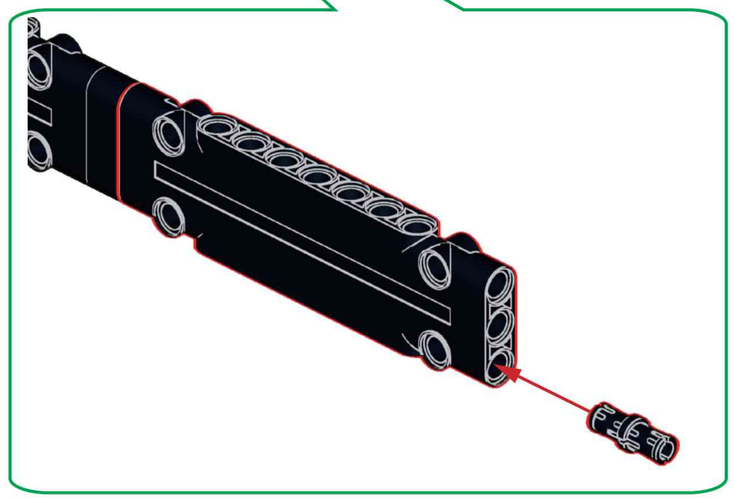

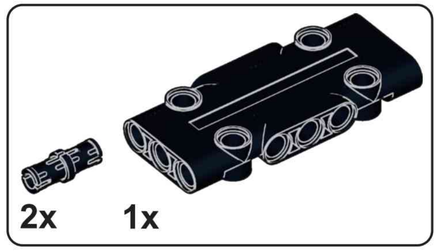

A48

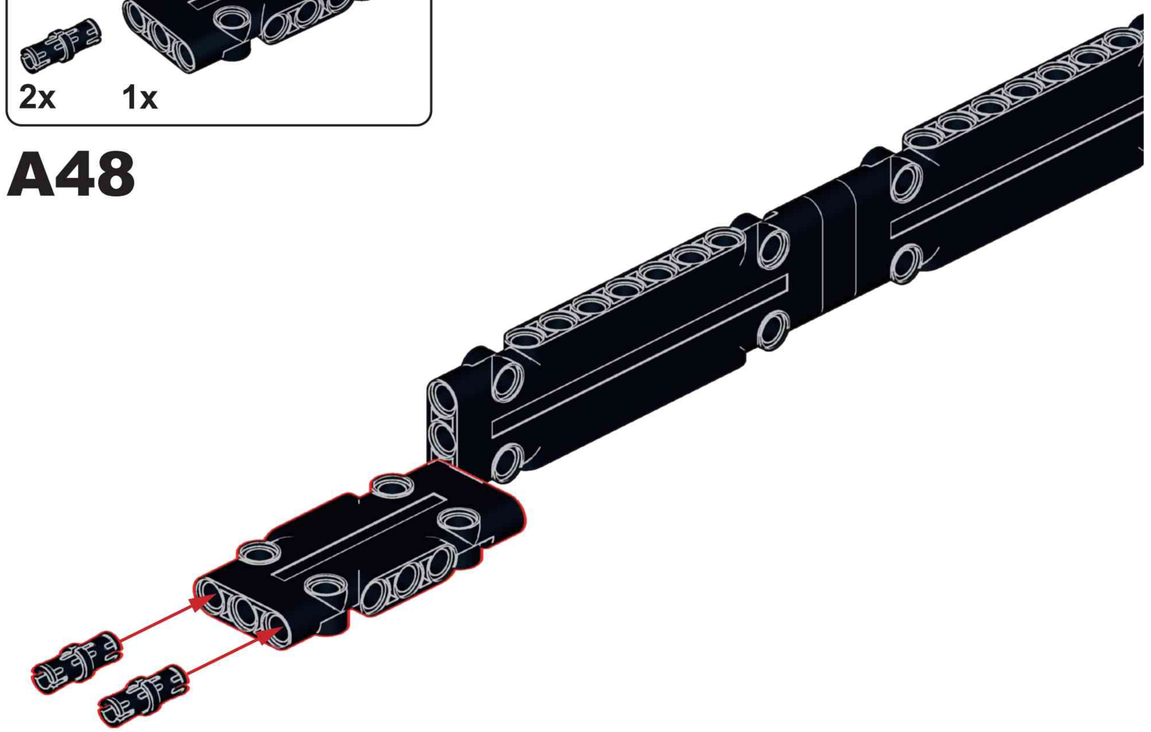

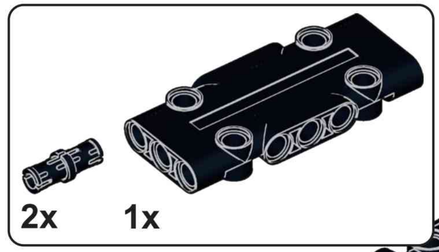

A49

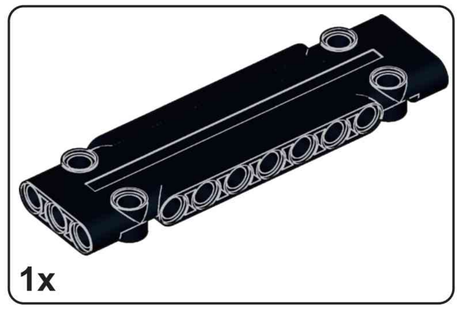

A50

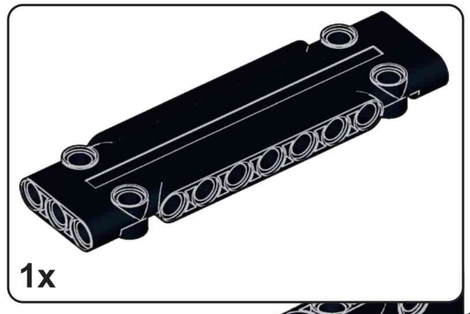

A51

A52

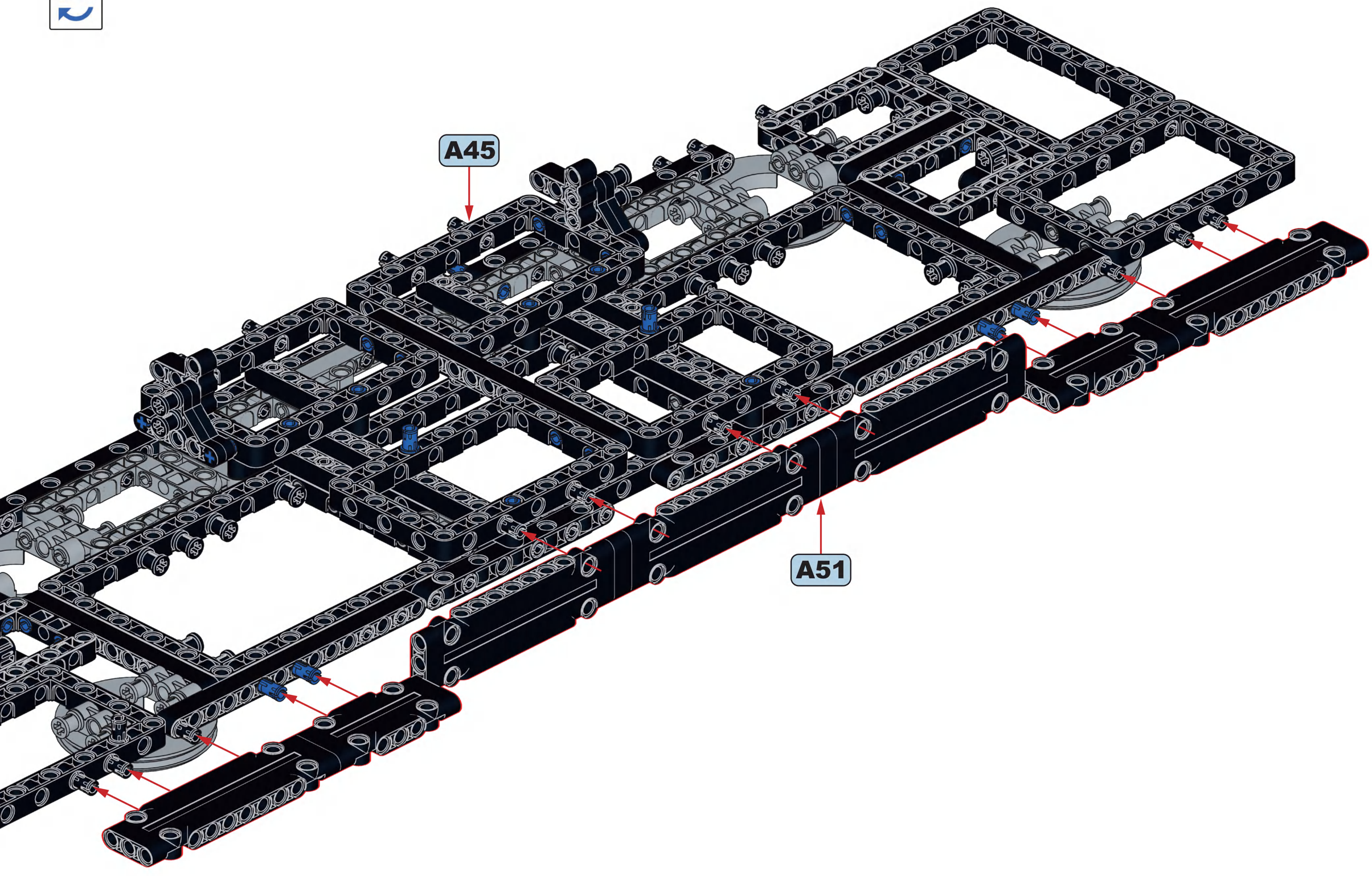

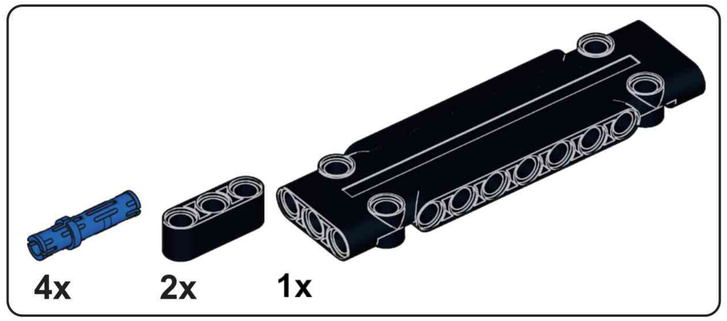

A53

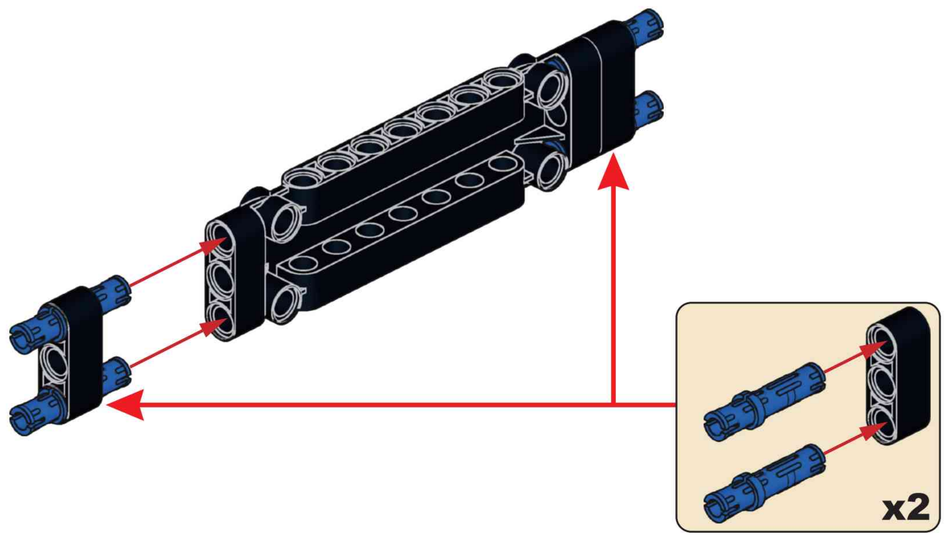

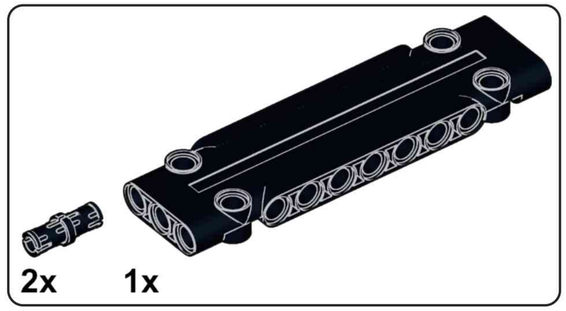

A54

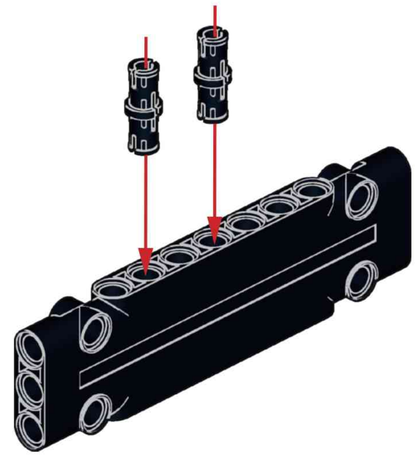

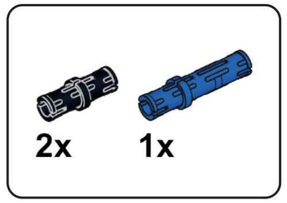

A55

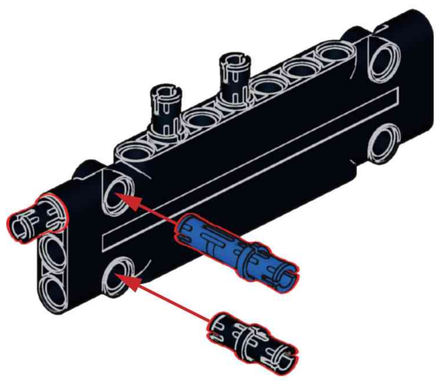

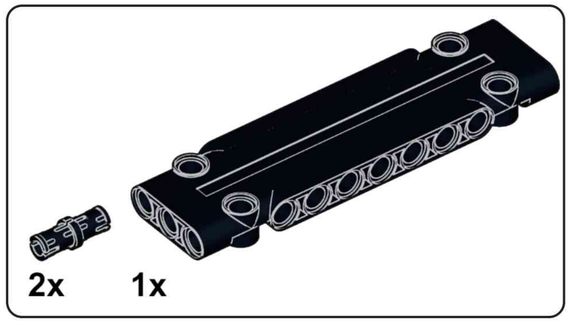

A56

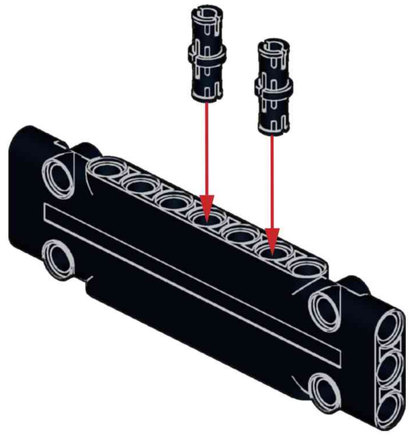

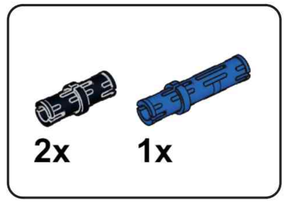

A57

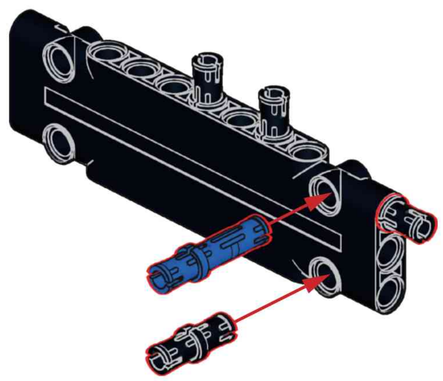

A58

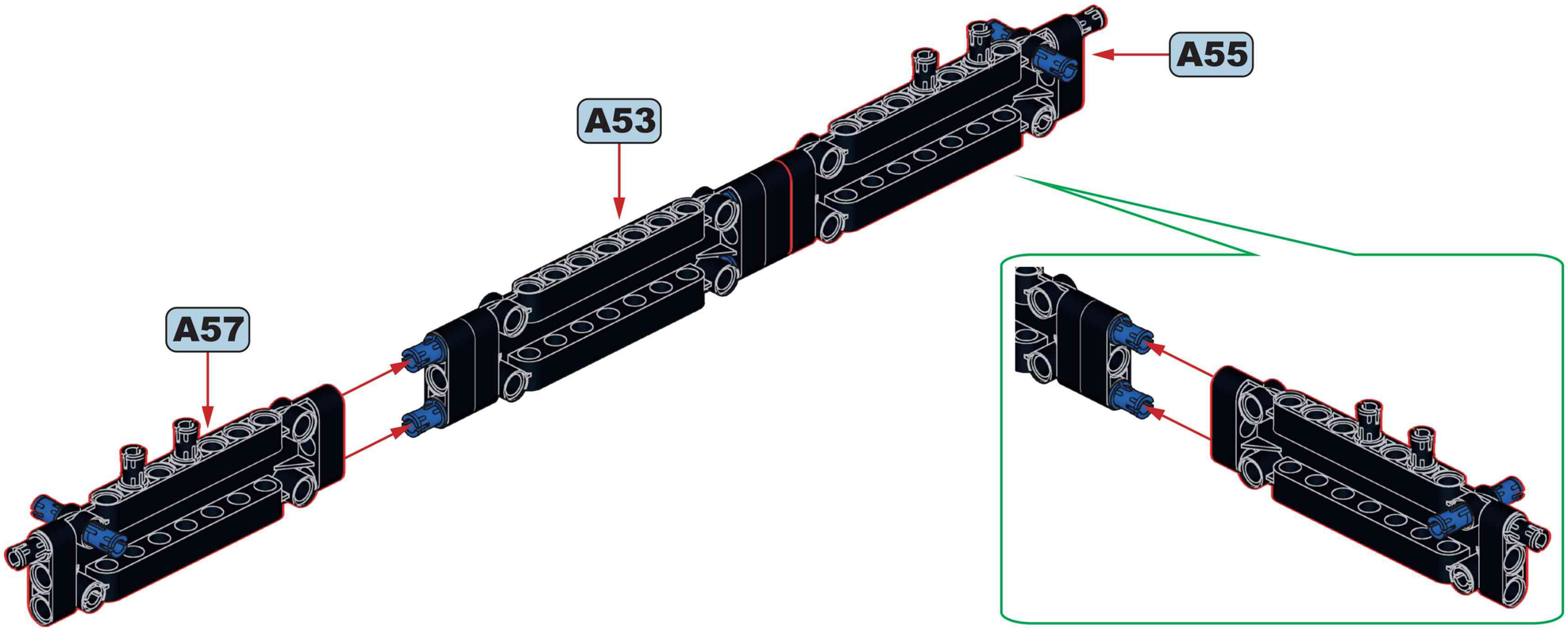

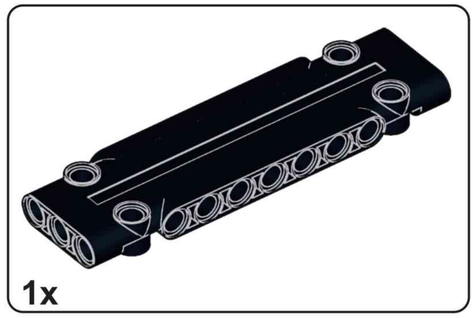

A59

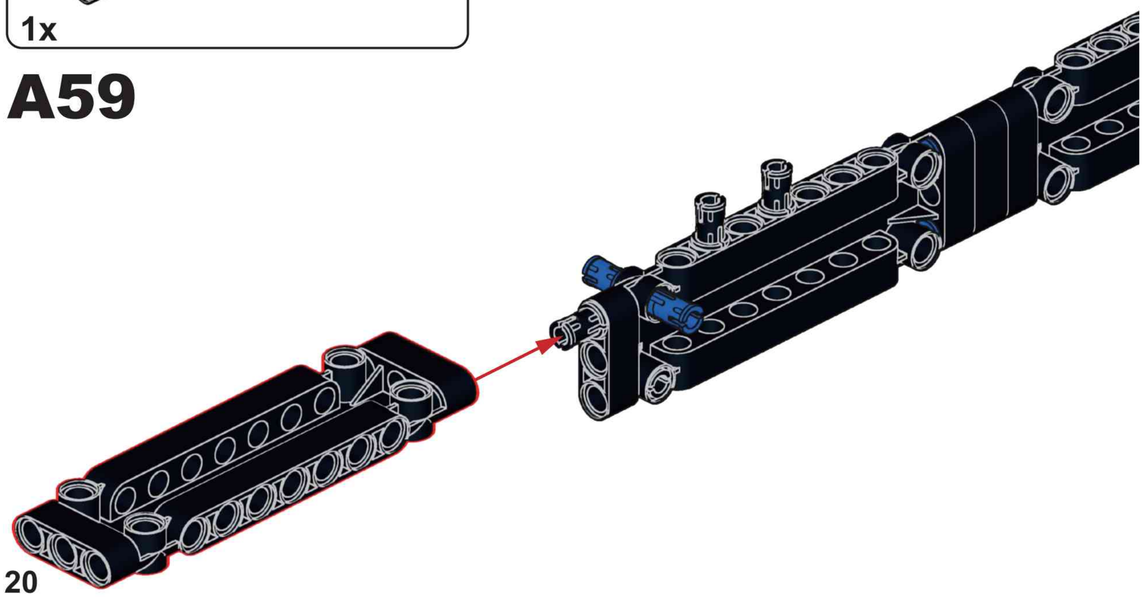

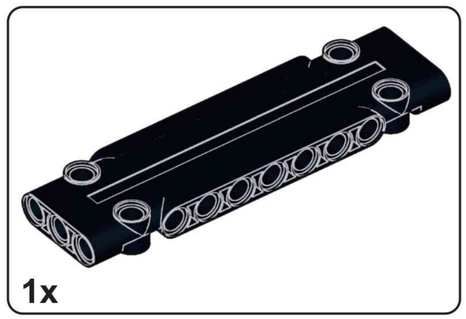

A60

1x 2x 2x 1x

A61

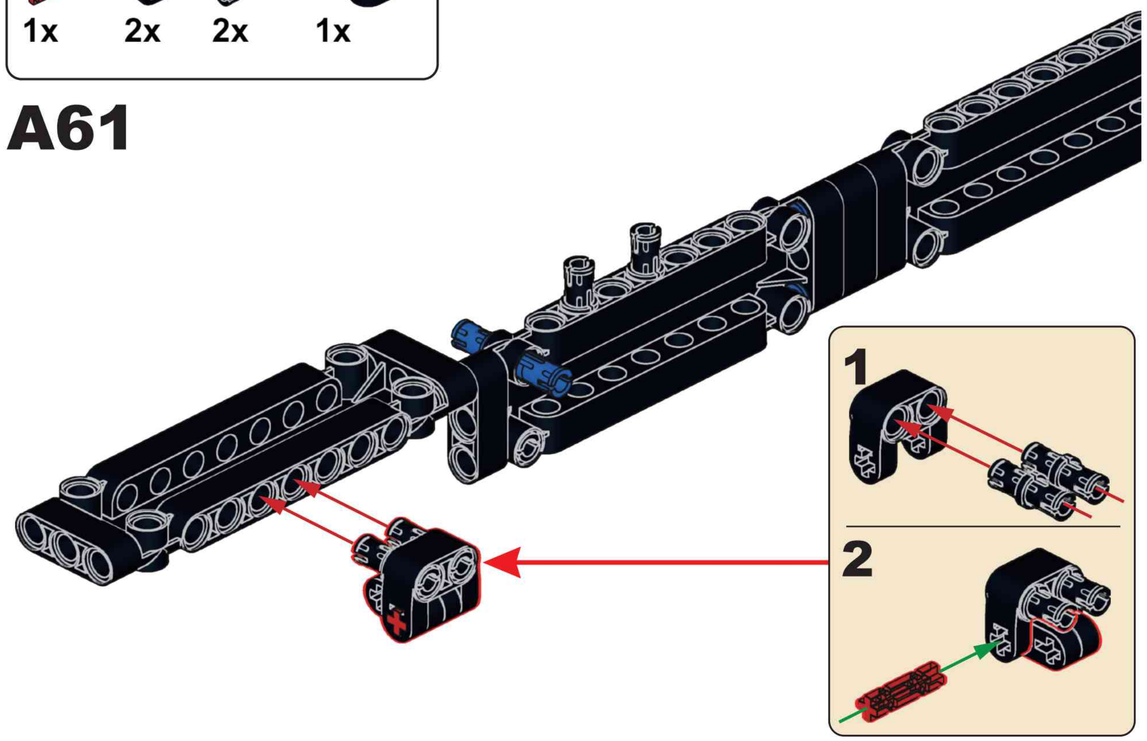

1x 2x 2x 1x

A62

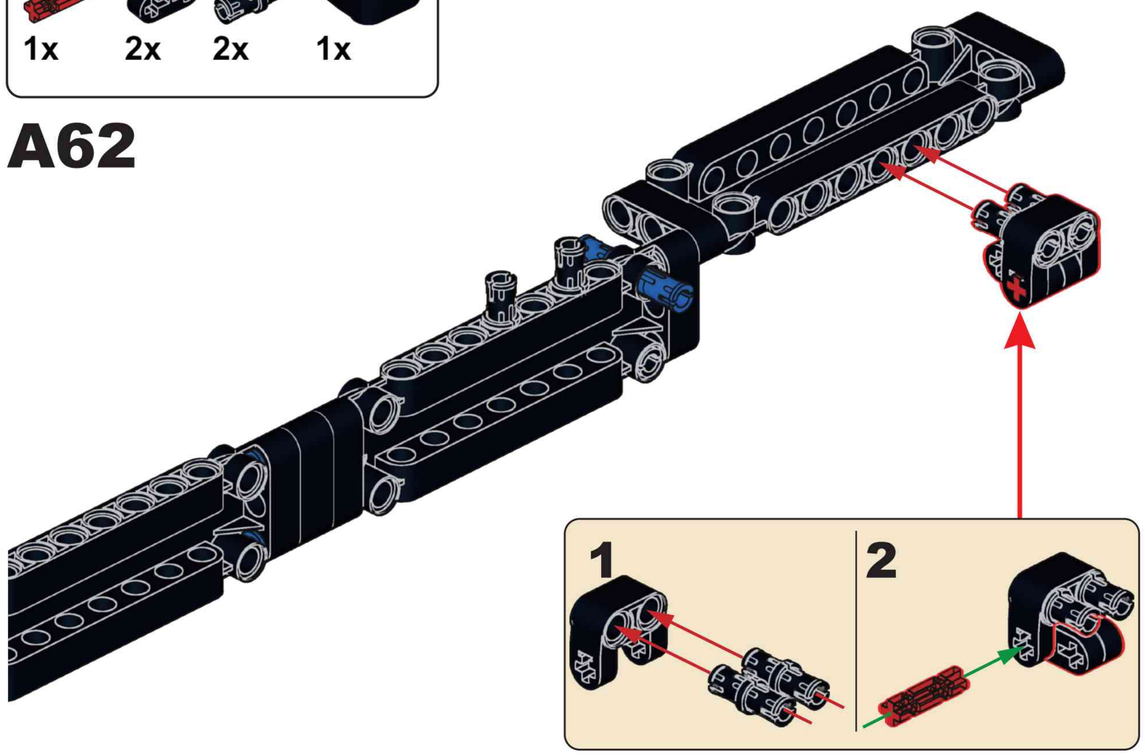

1x 1x

A63

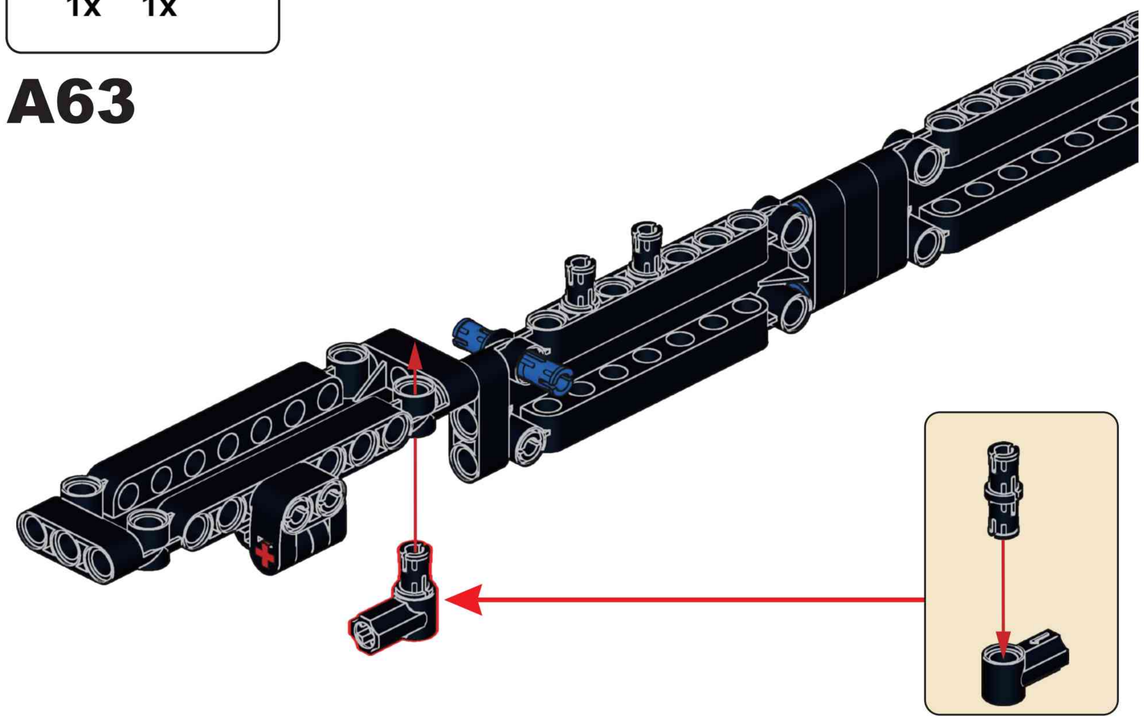

1x 1x

A64

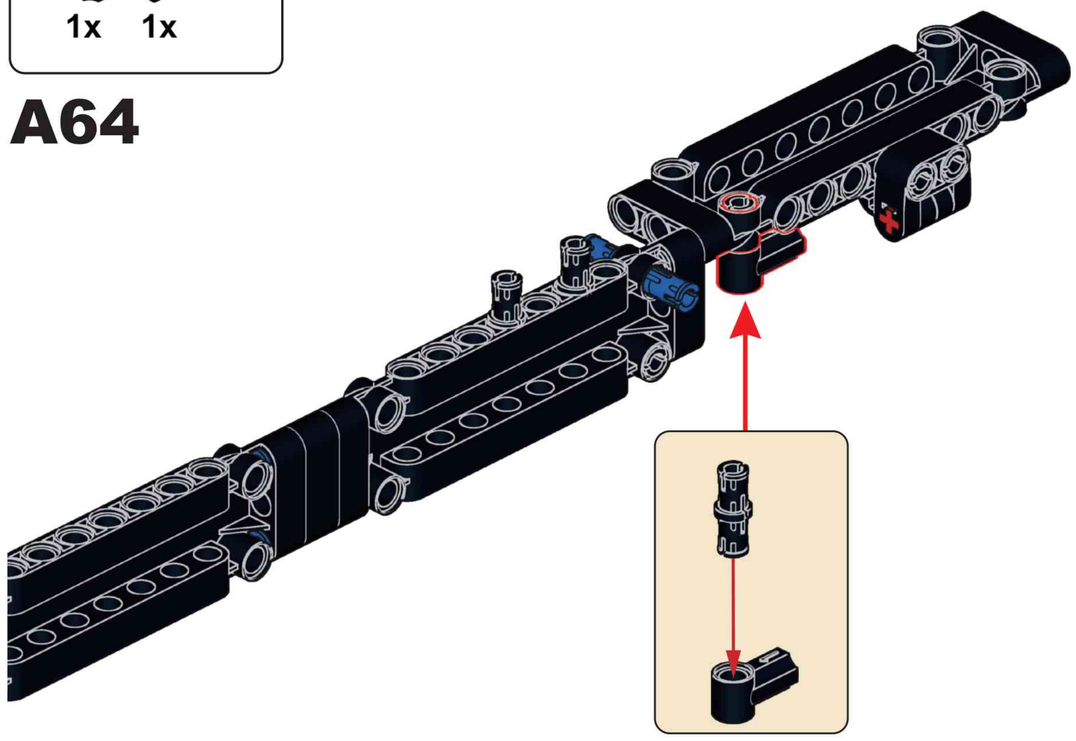

6x

A65

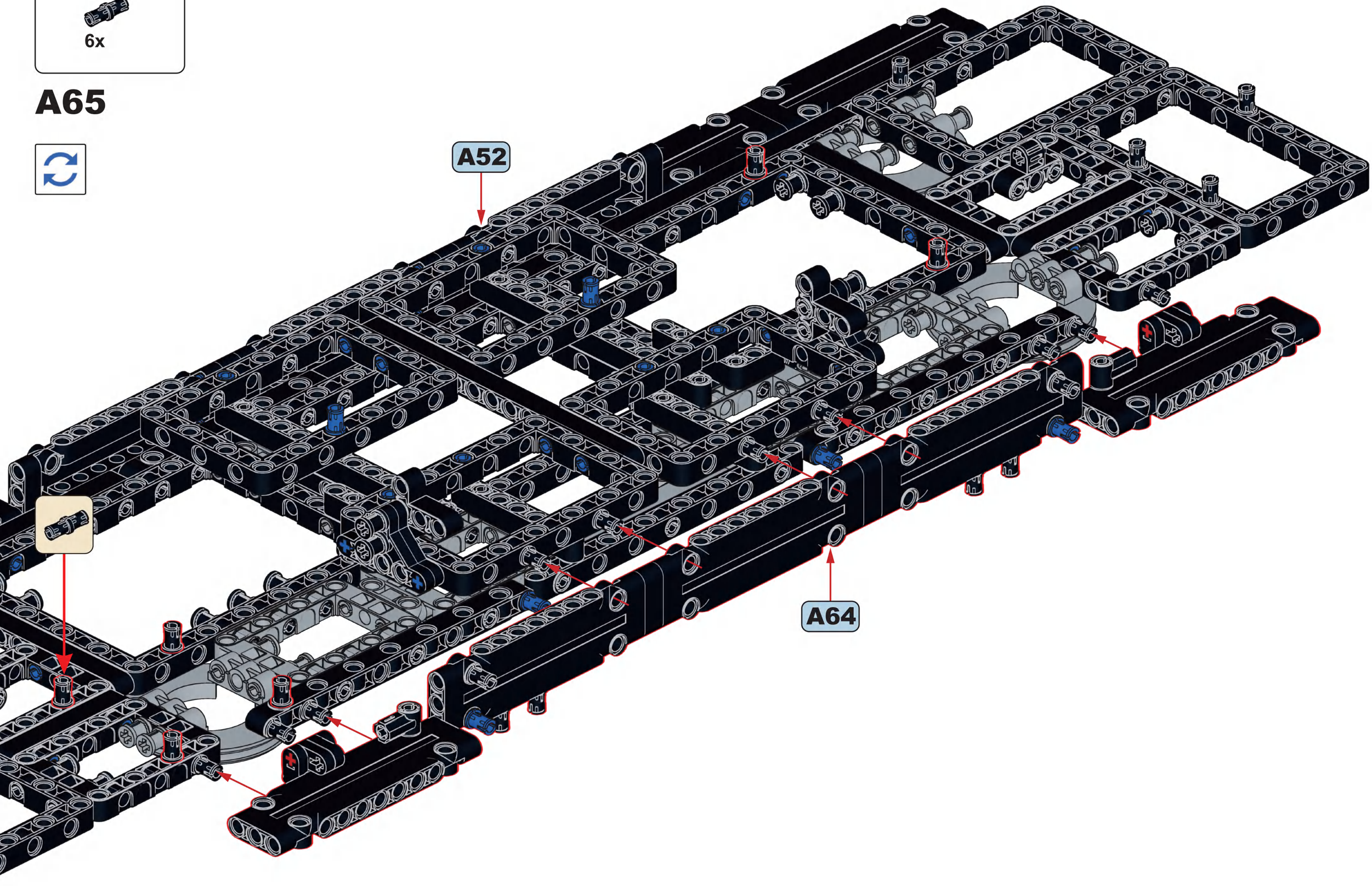

2

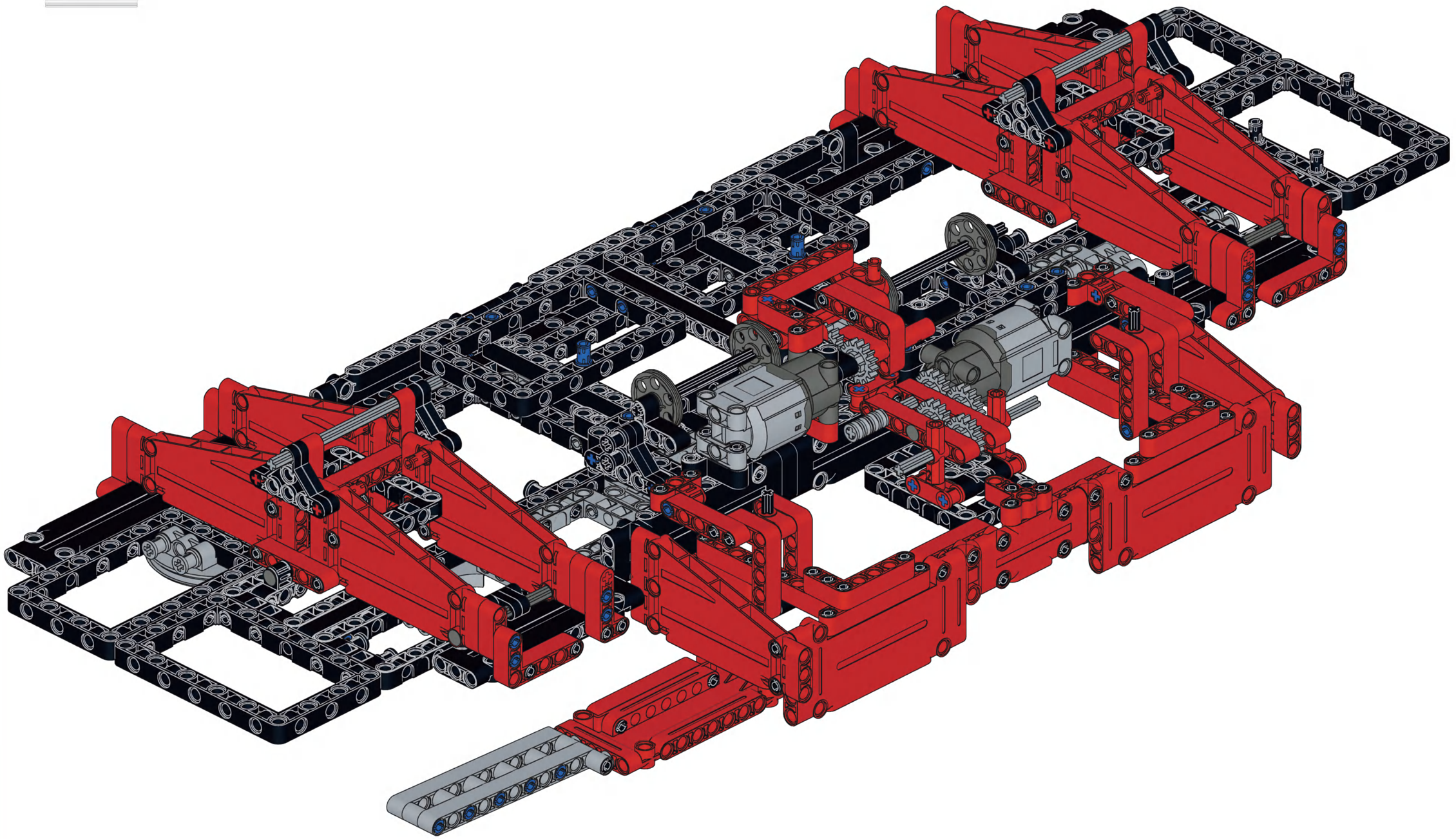

B

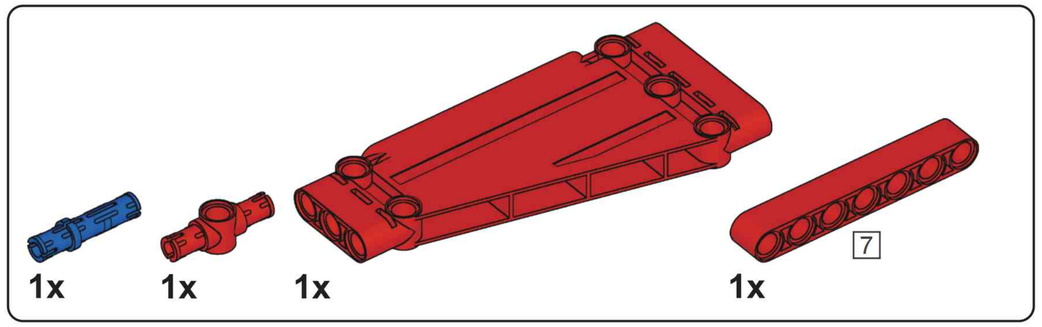

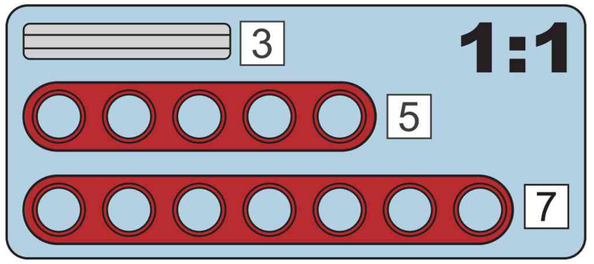

B1

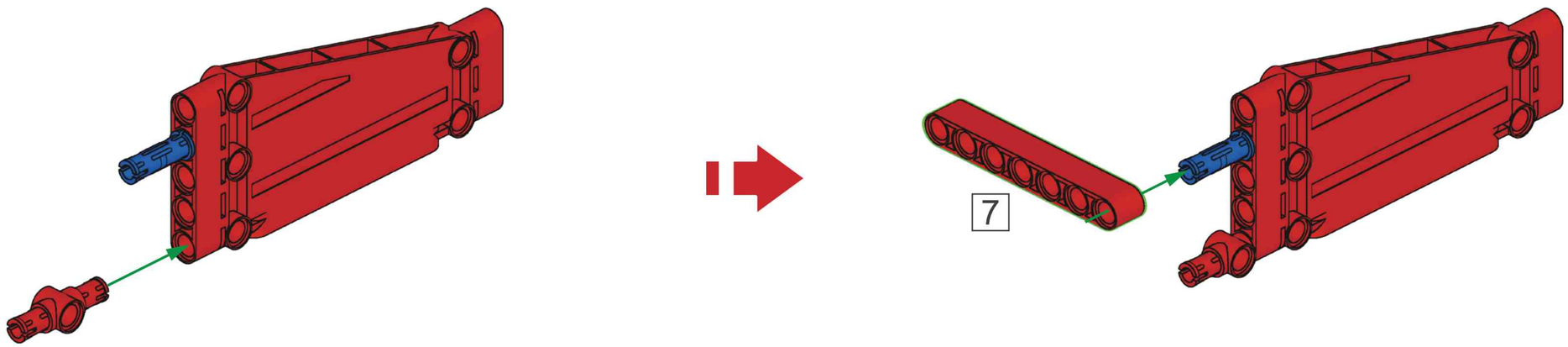

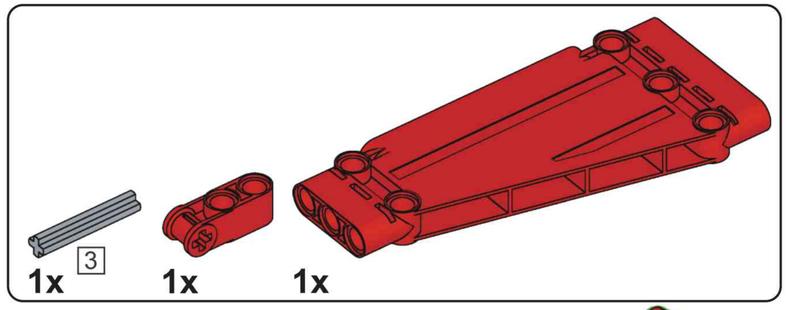

B2

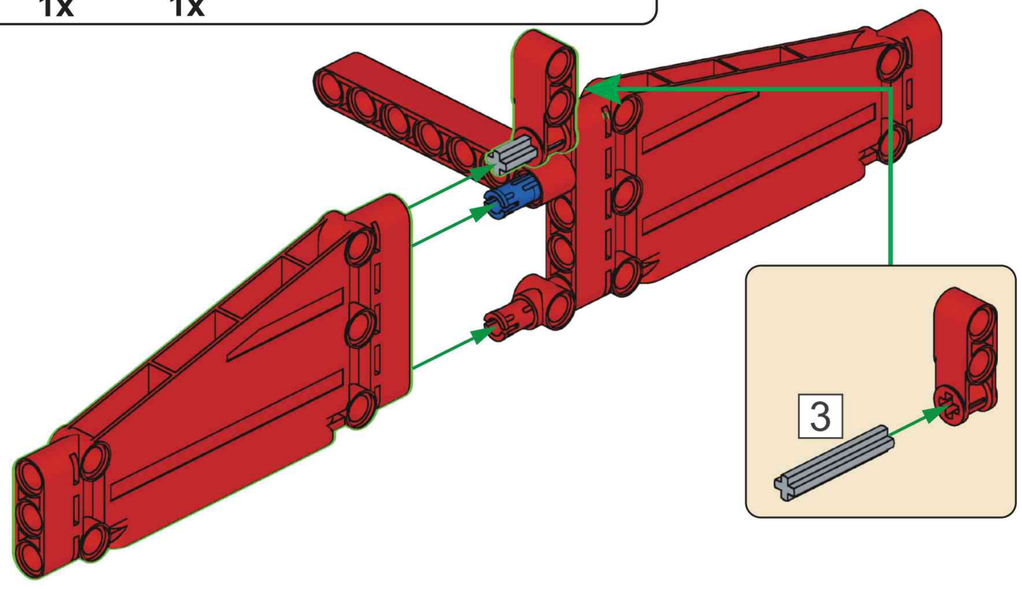

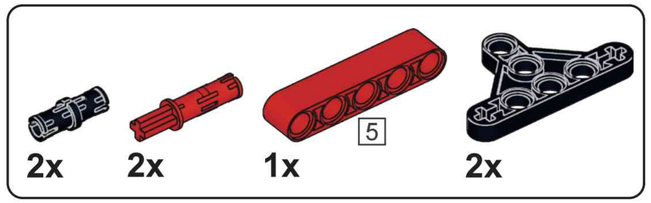

B3

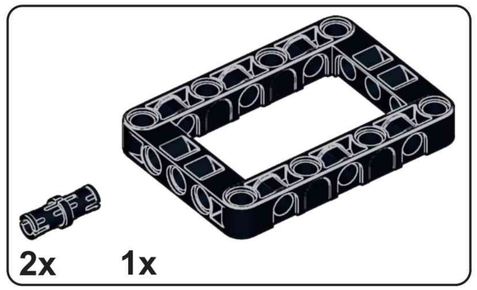

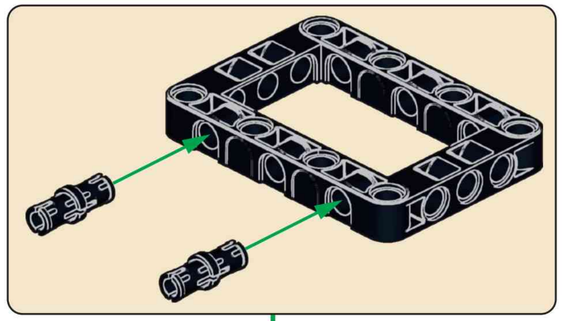

B4

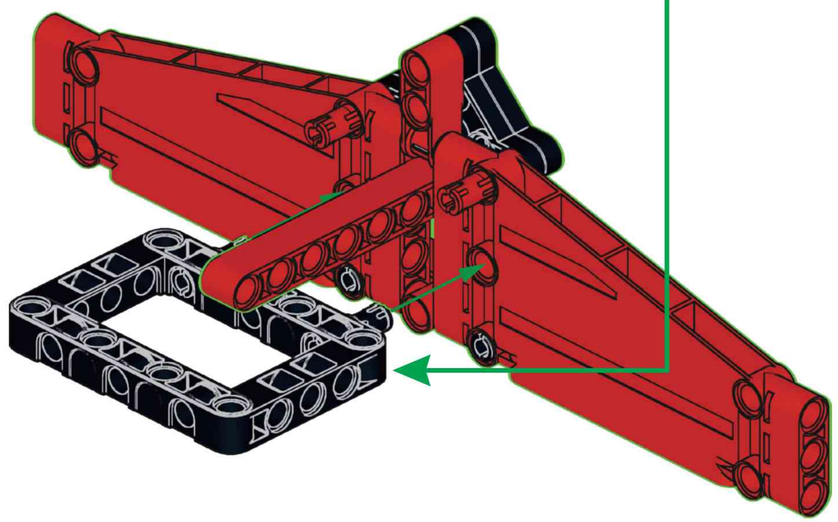

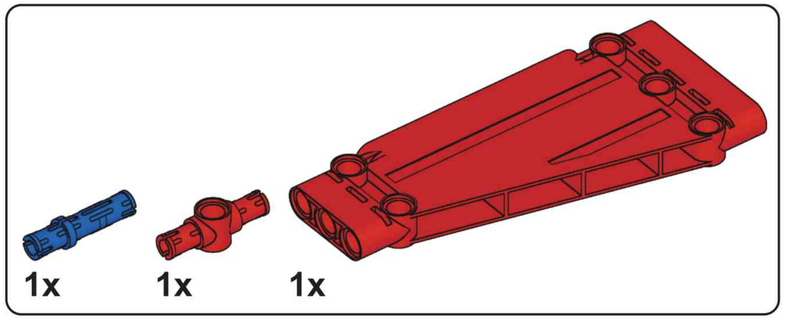

B5

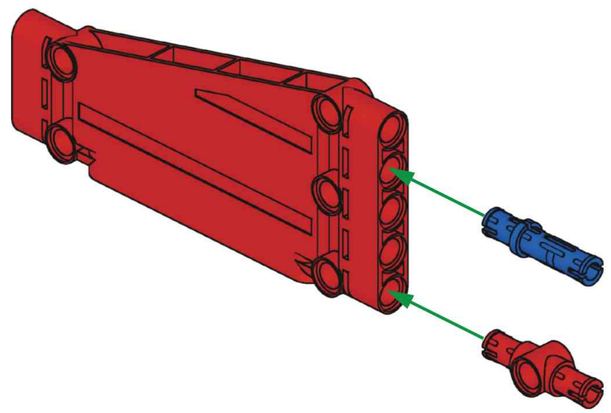

B6

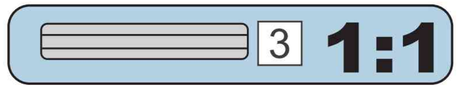

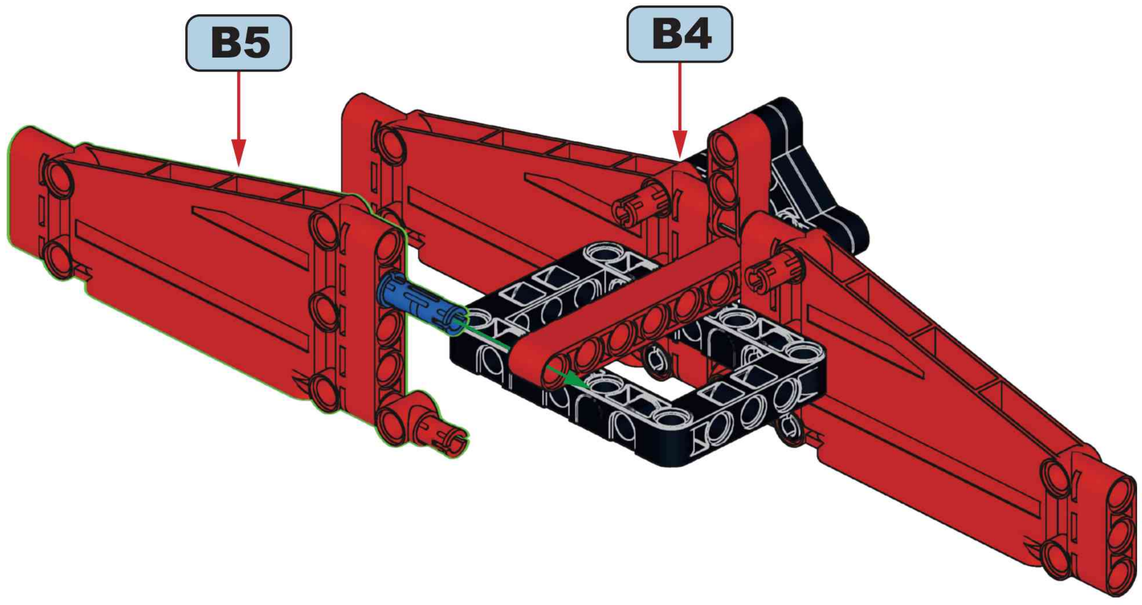

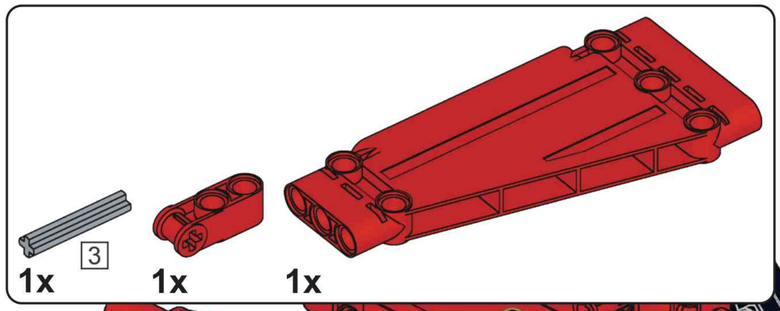

B7

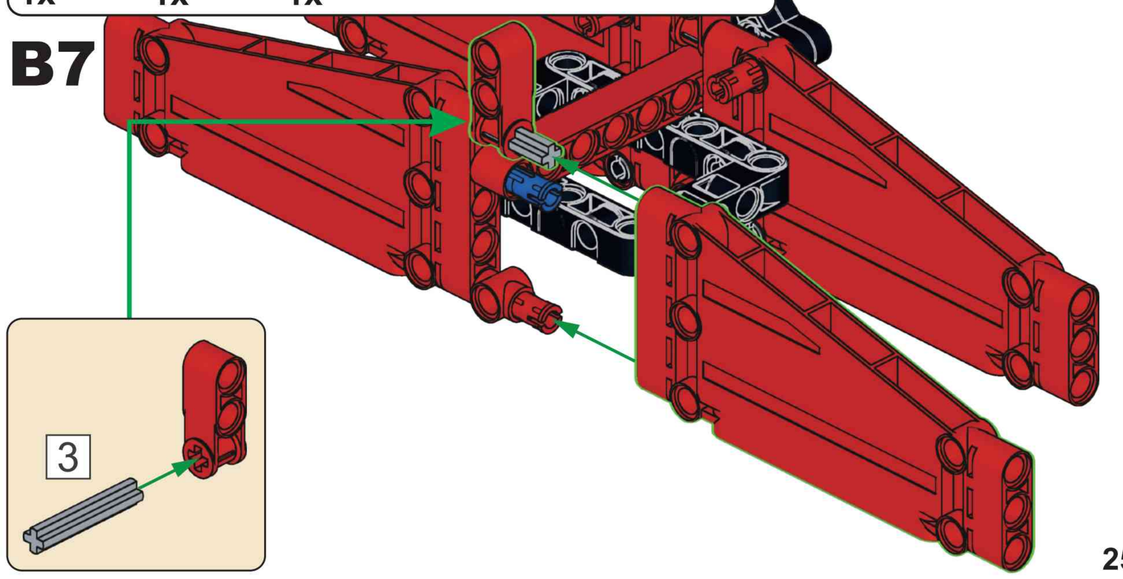

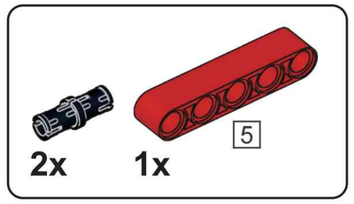

B8

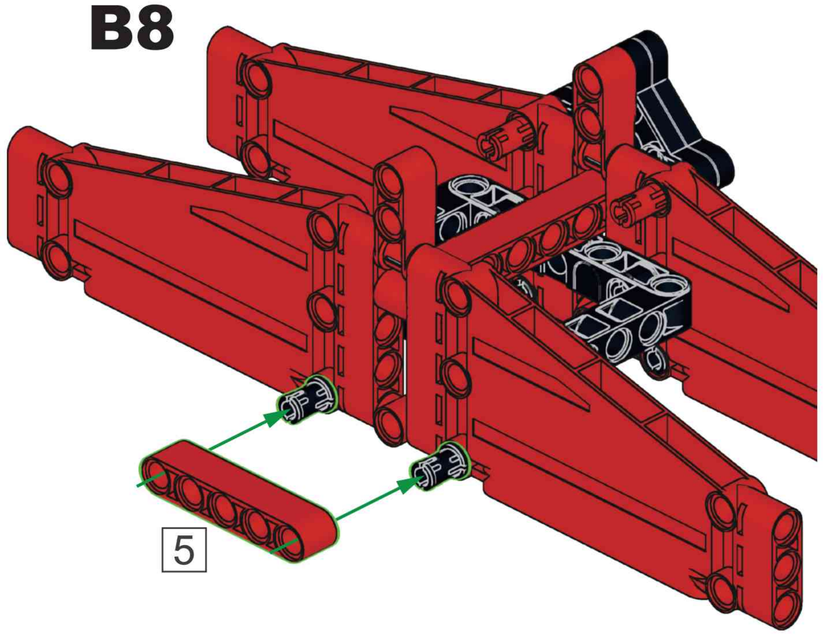

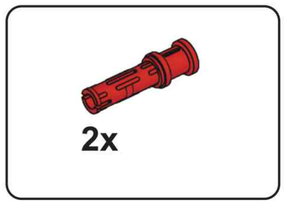

B9

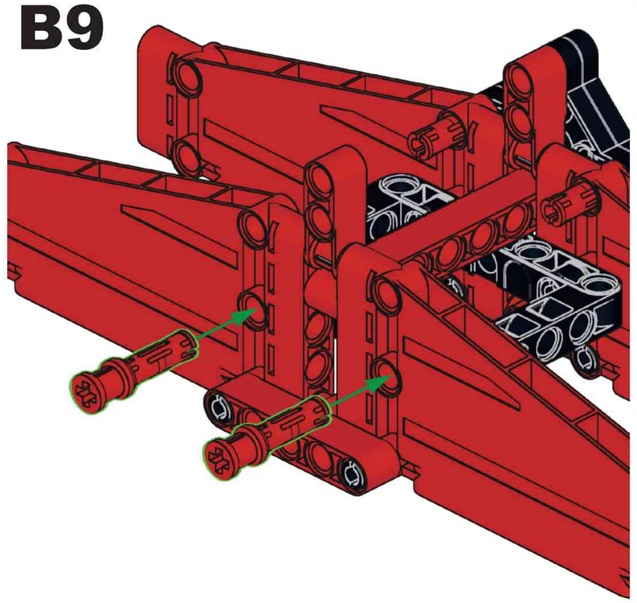

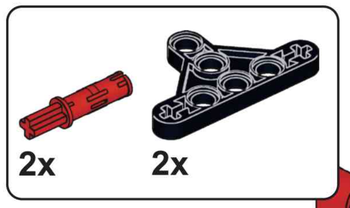

B10

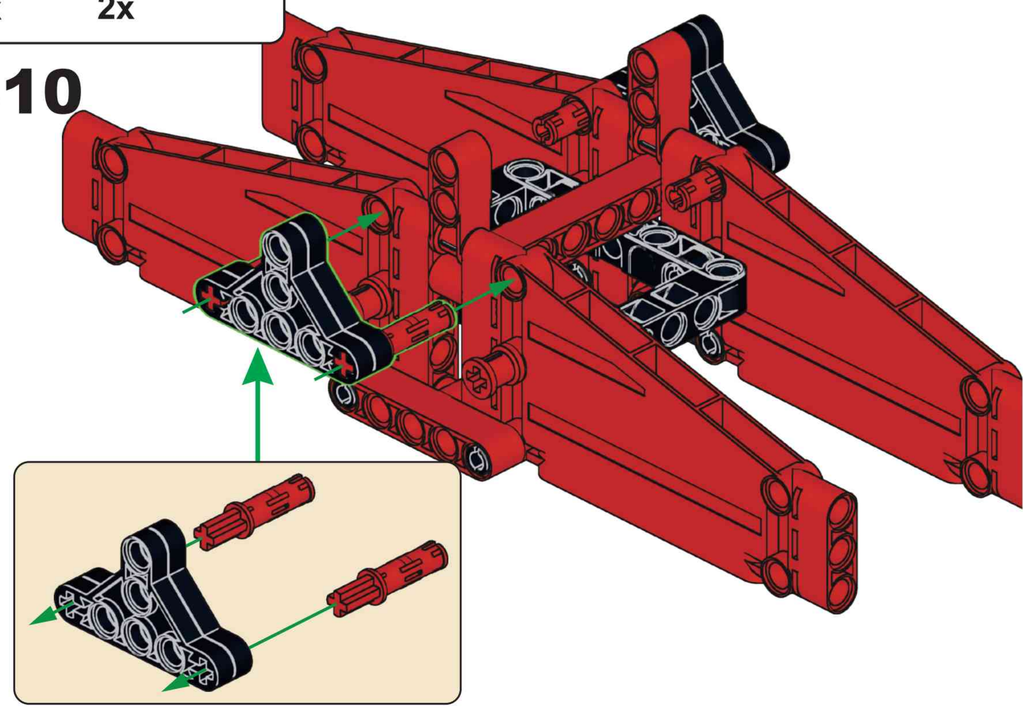

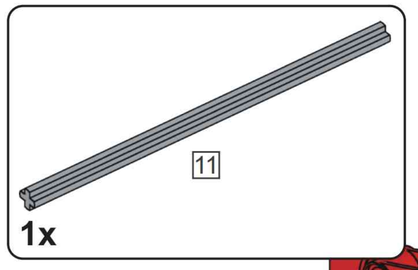

B11

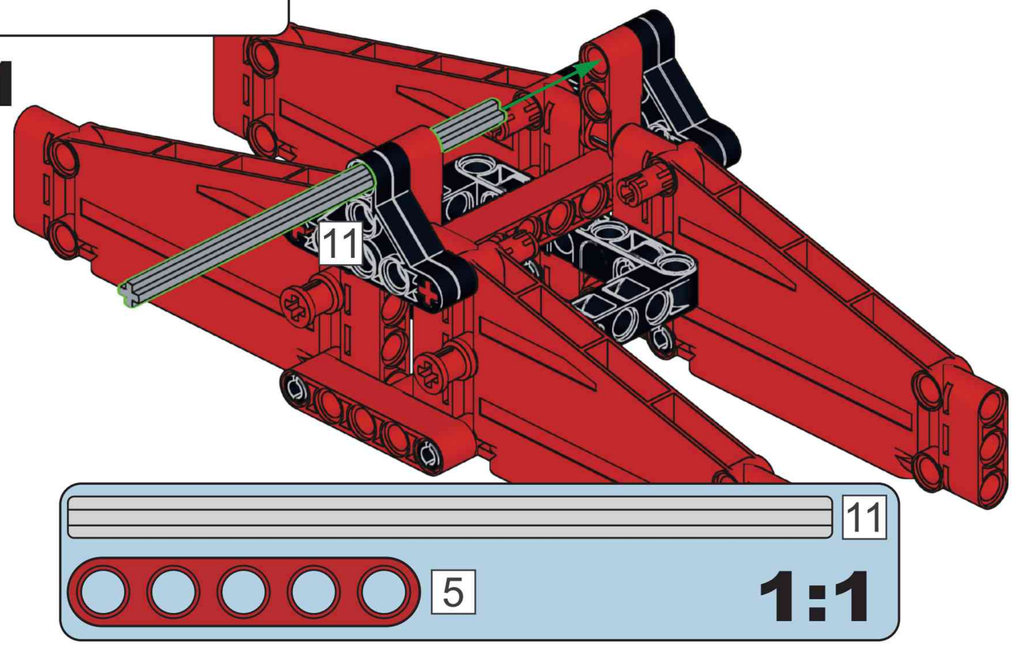

B12

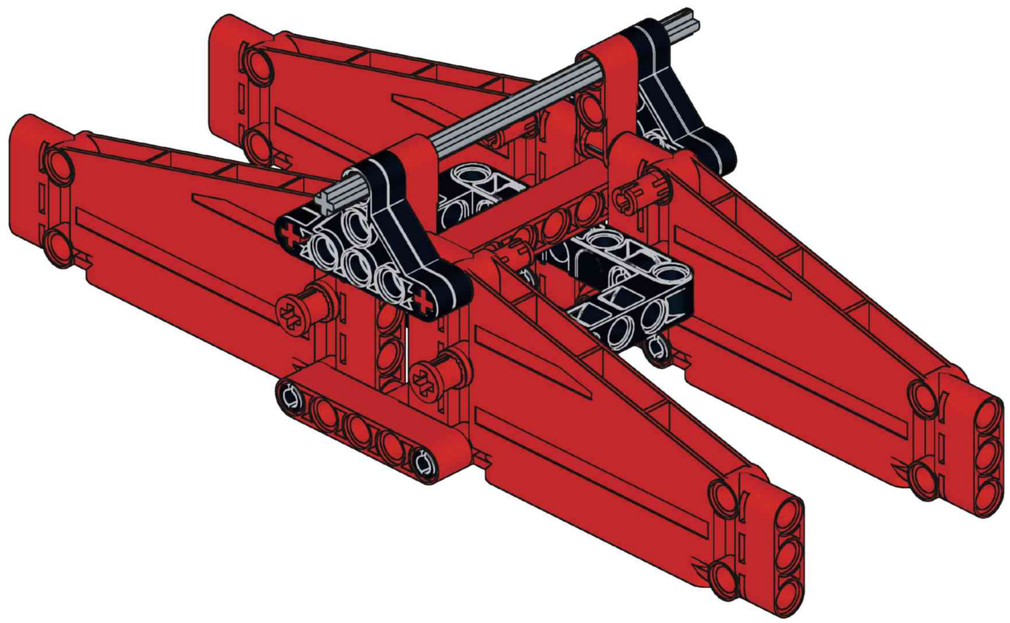

x2

B13

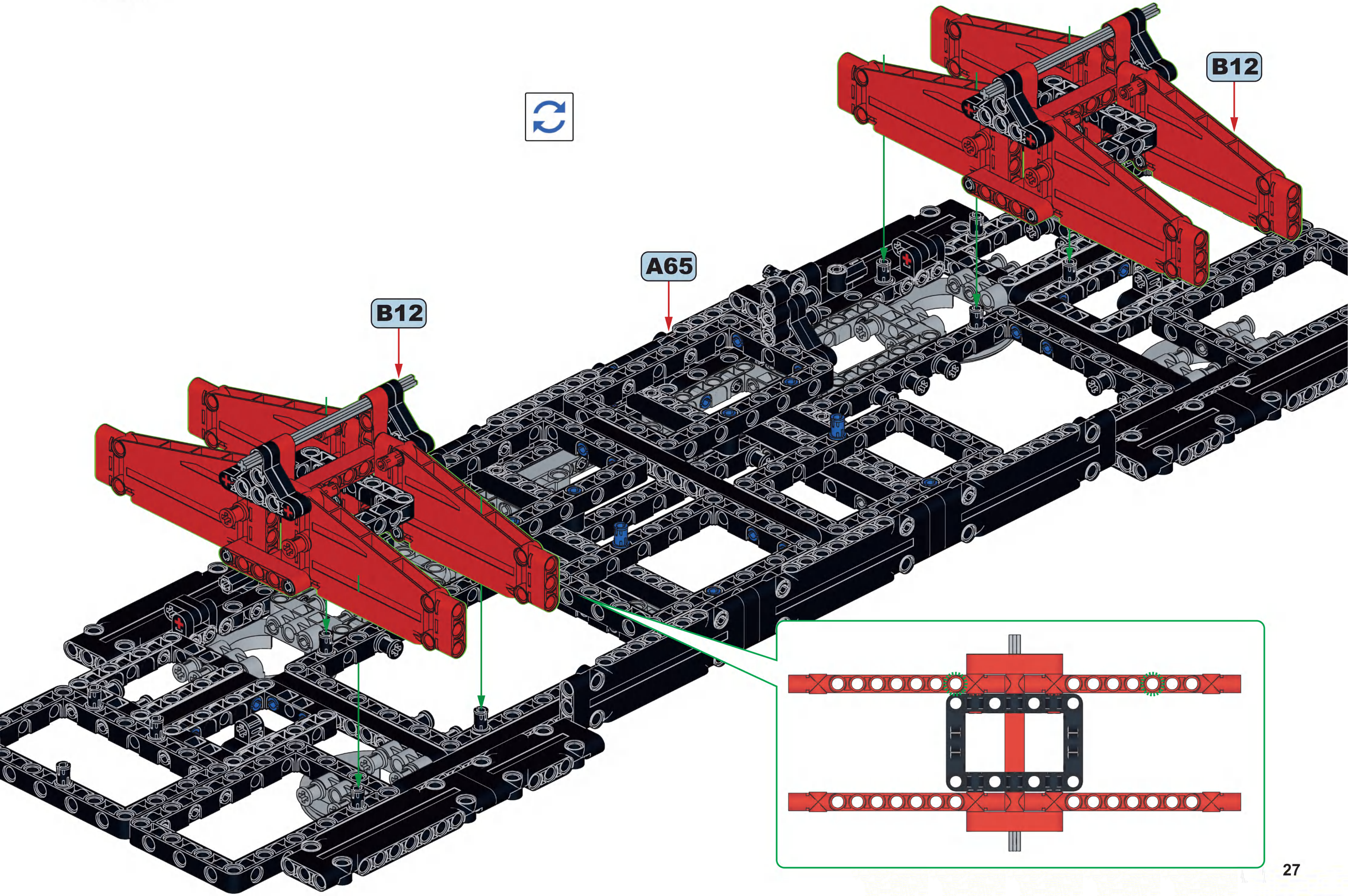

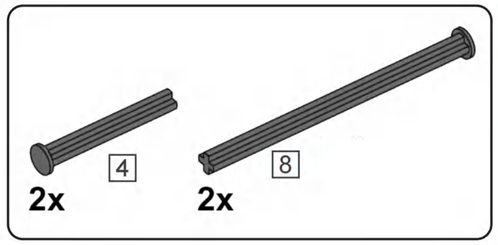

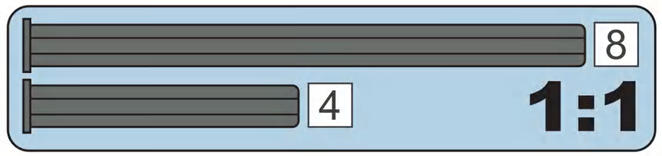

B14

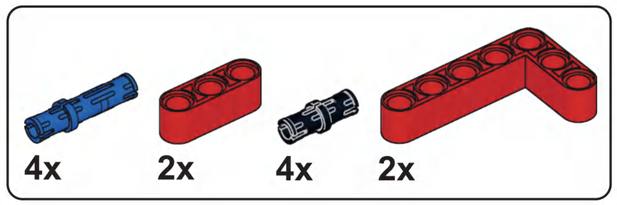

B15



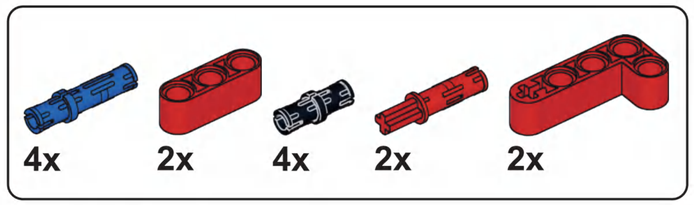

B16

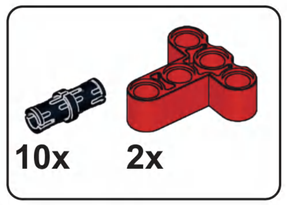

B17

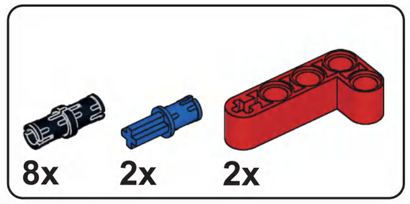

B18

4x 2x

B19

3x 1x

B20

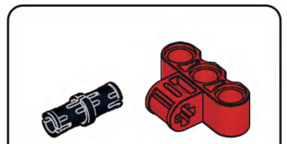

B21

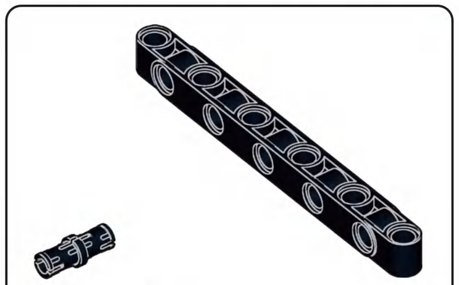

B22

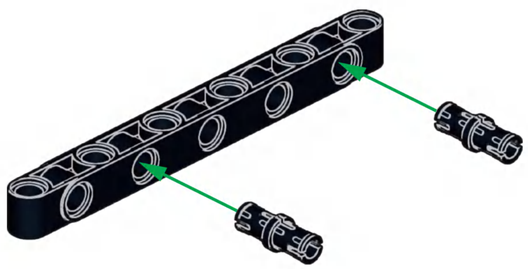

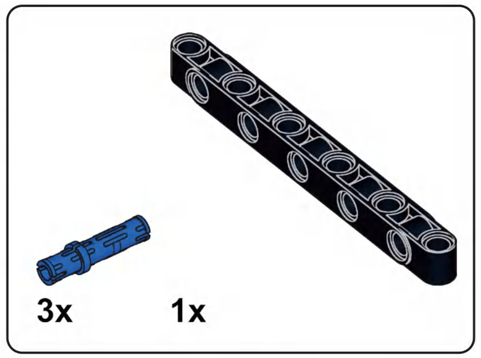

B23

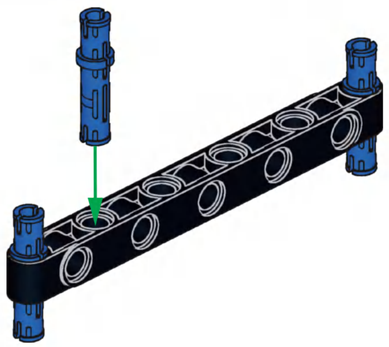

B24

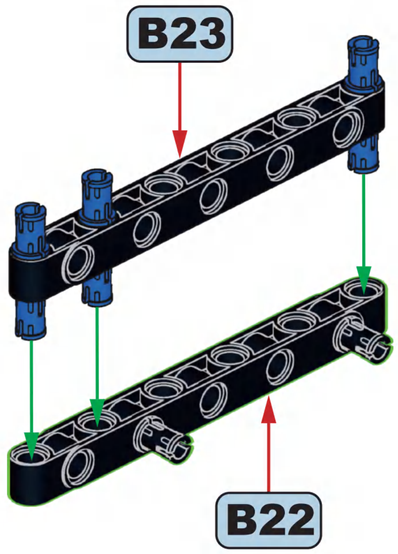

B25

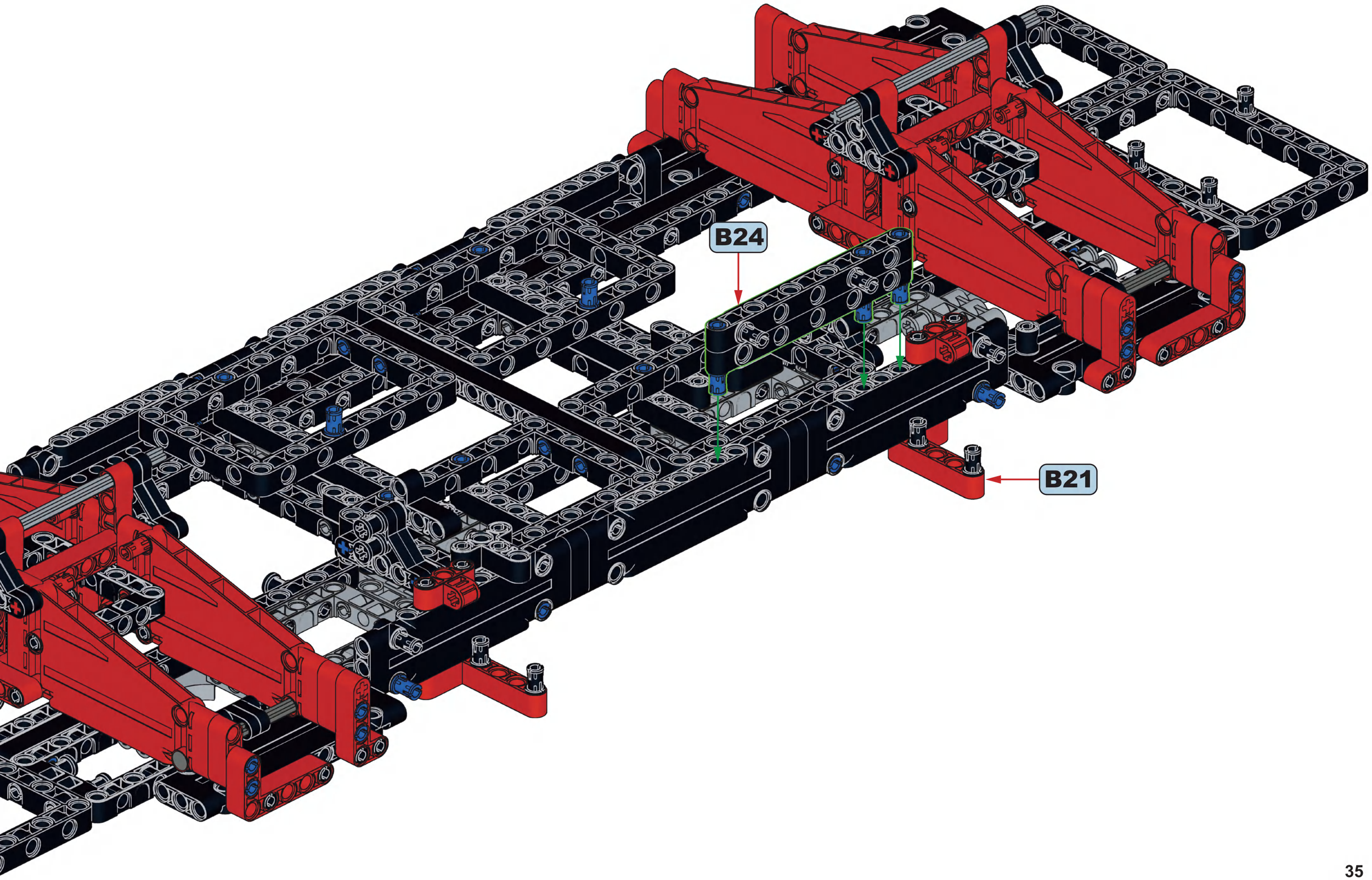

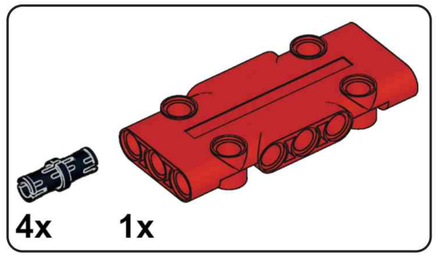

B26

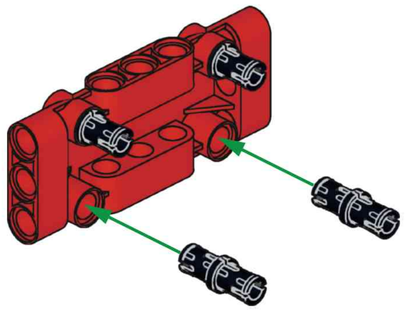

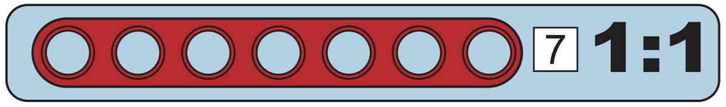

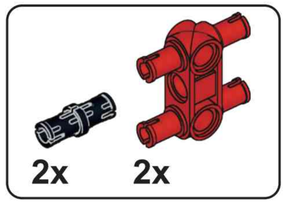

B27

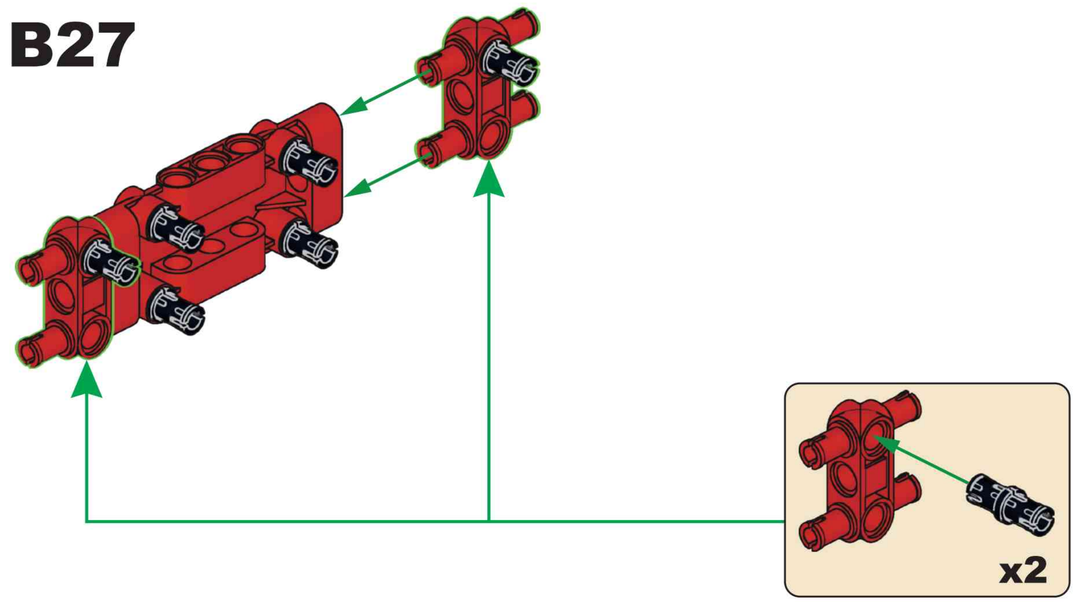

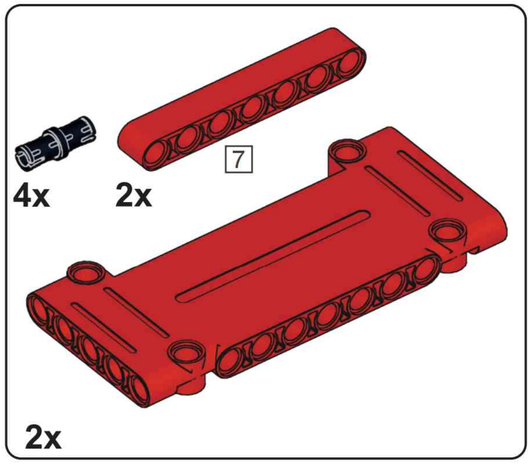

B28

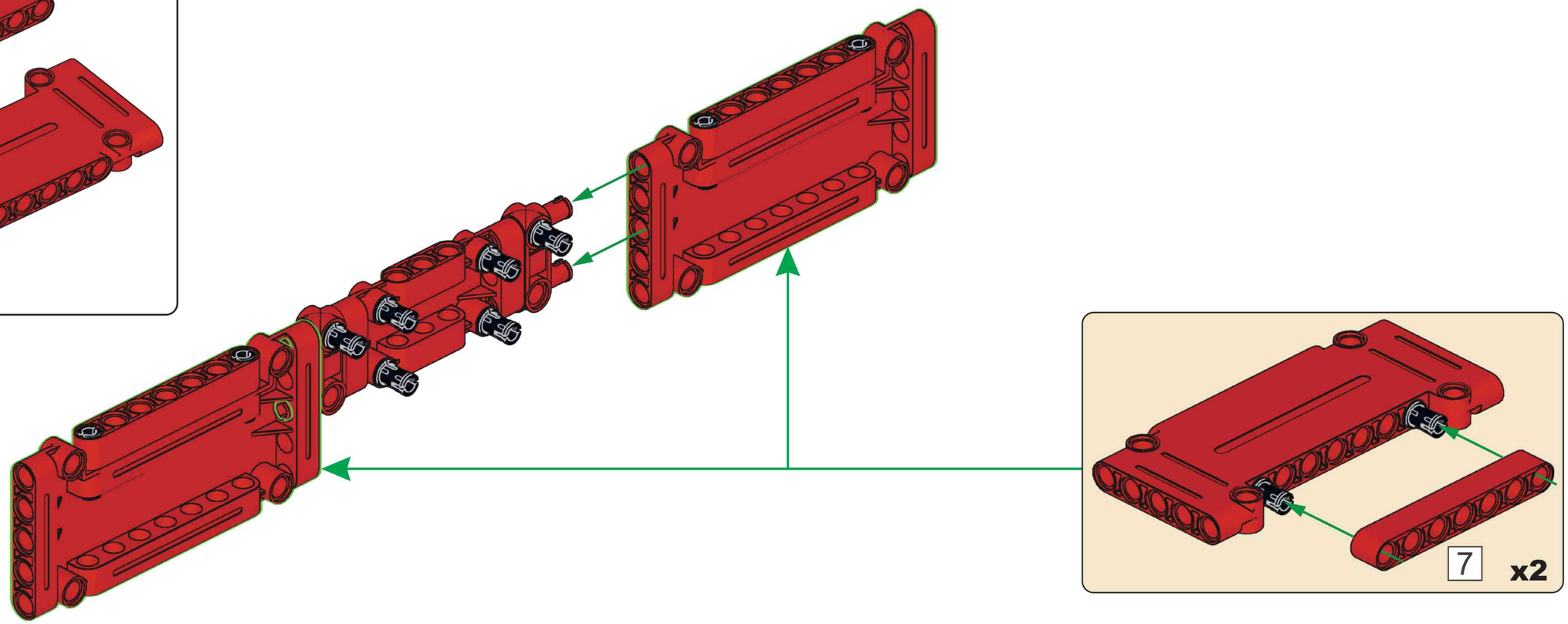

2x 2x

B29

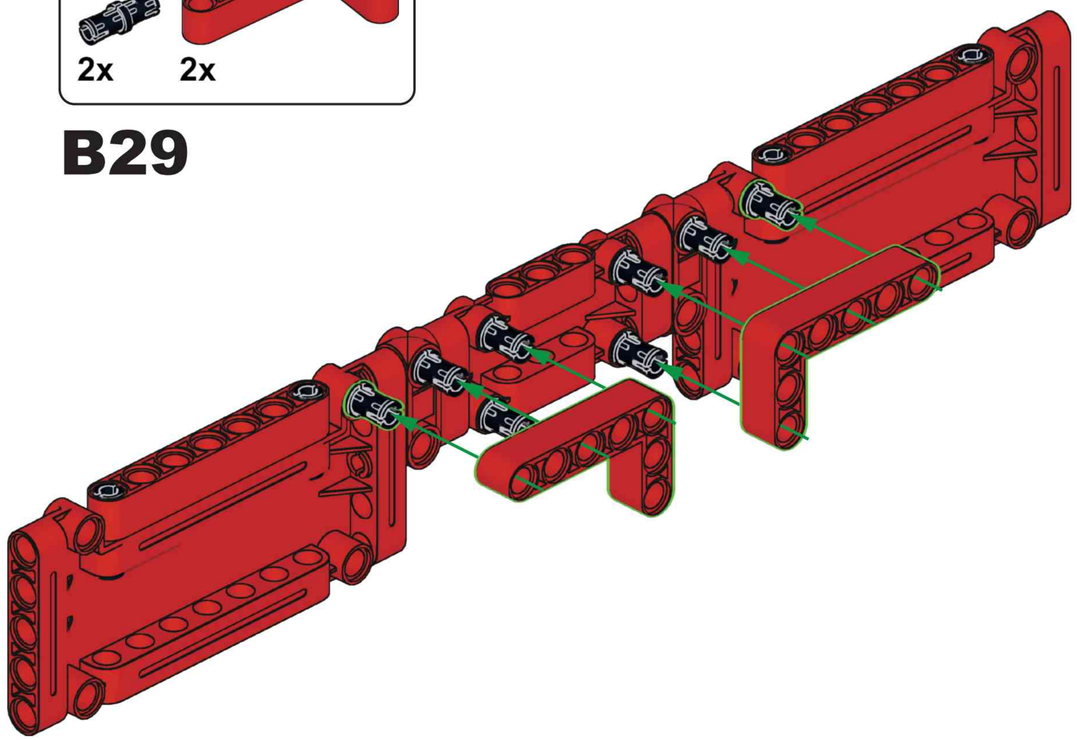

4x

B30

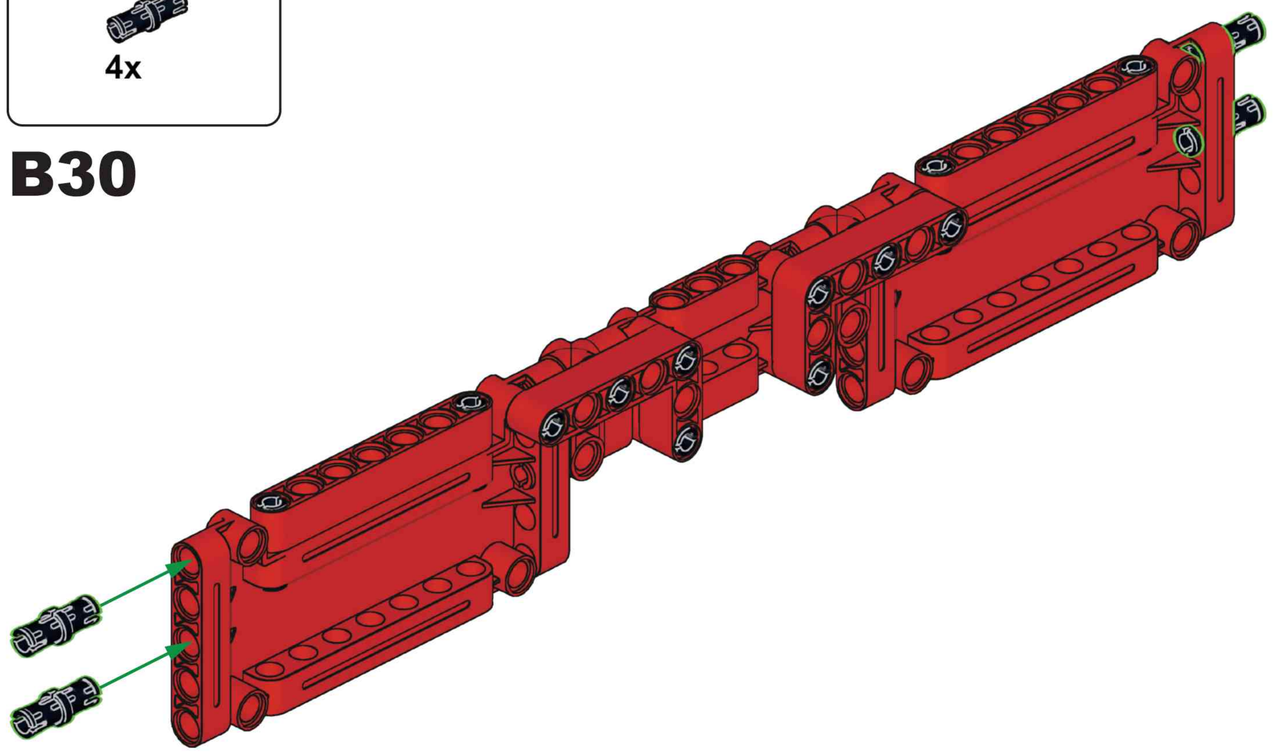

6x

B31

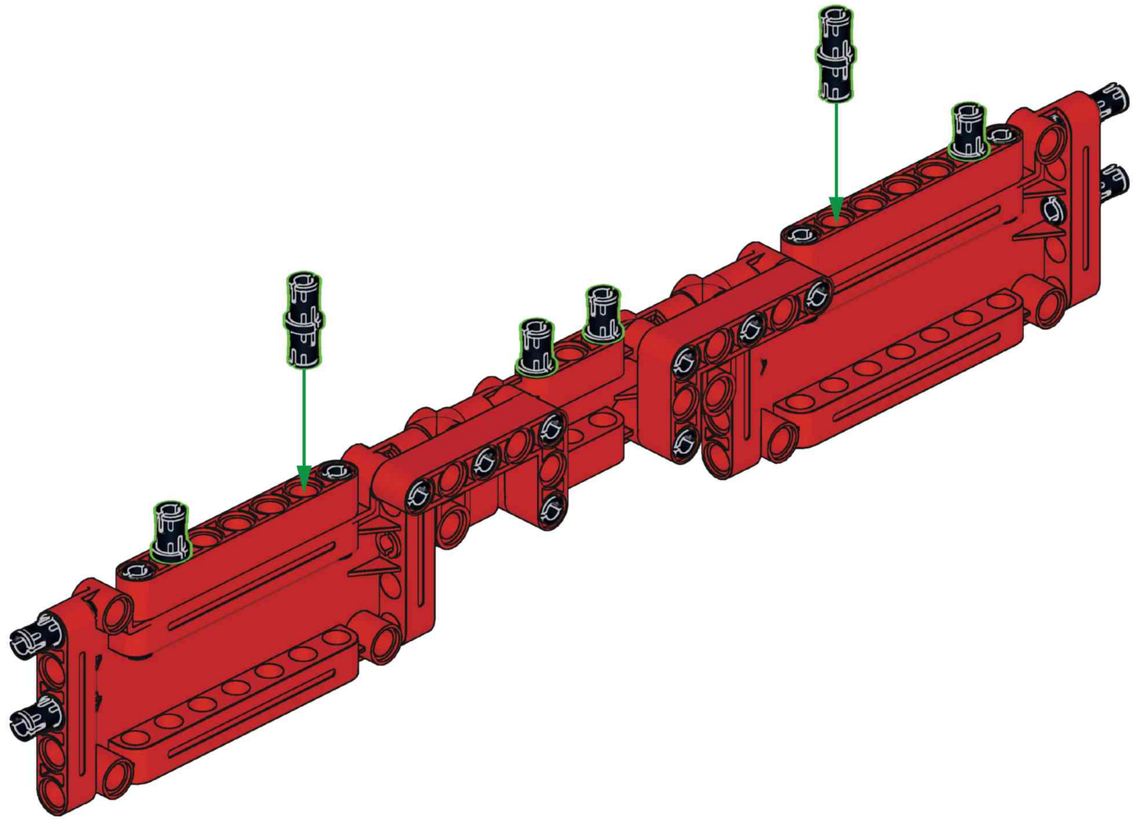

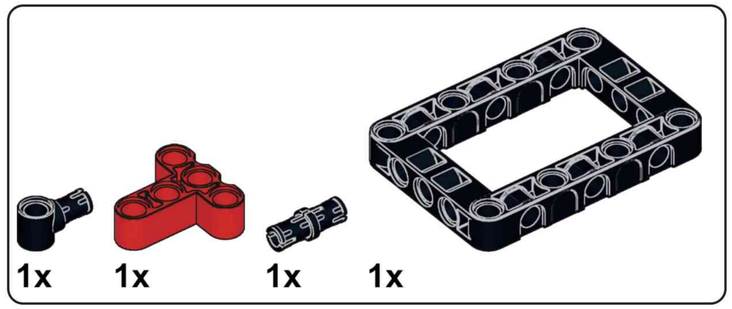

B32

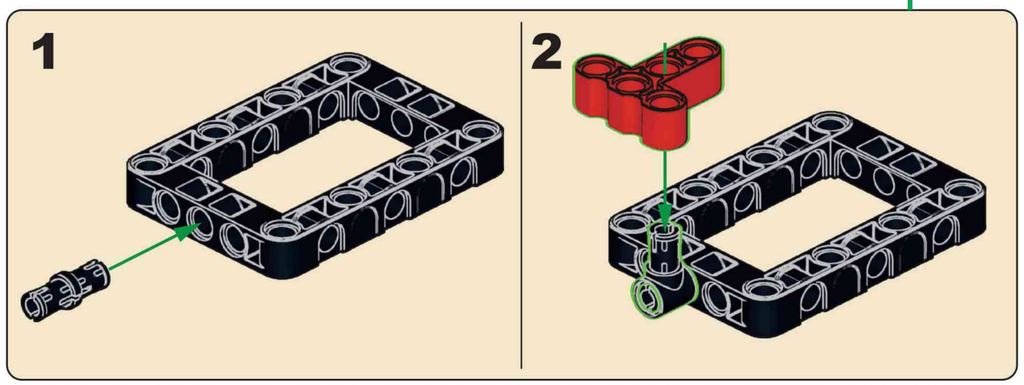

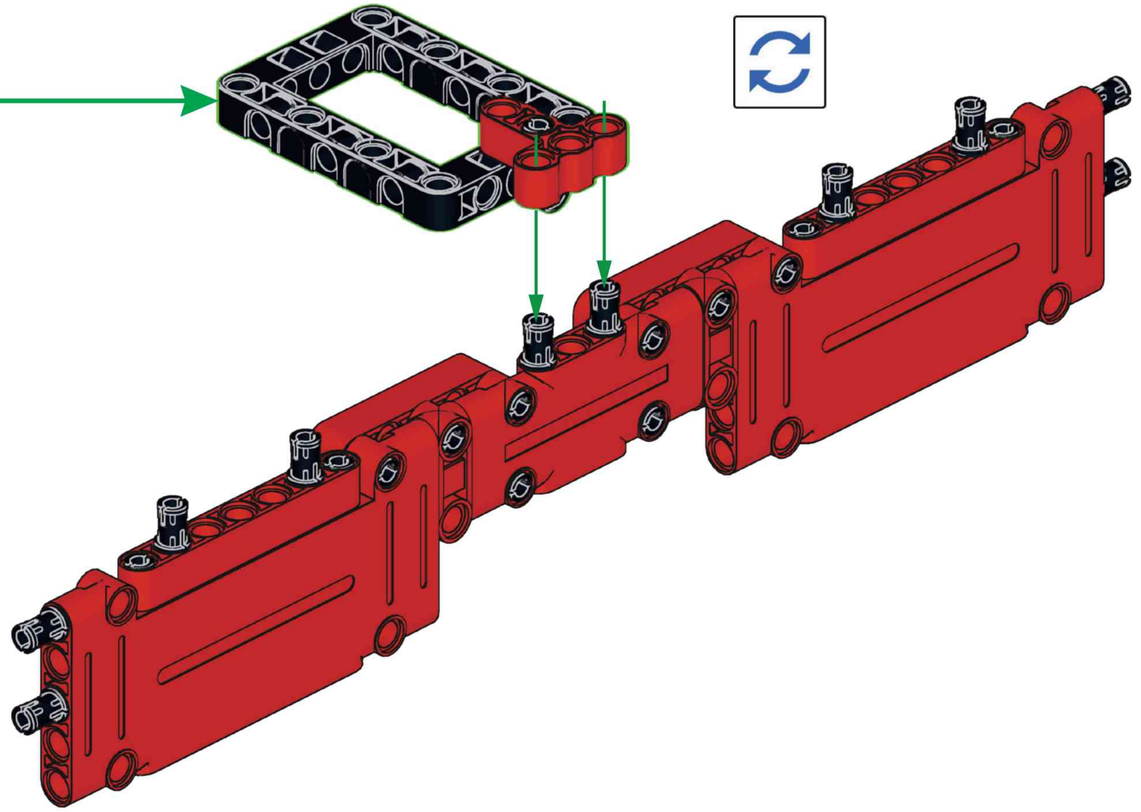

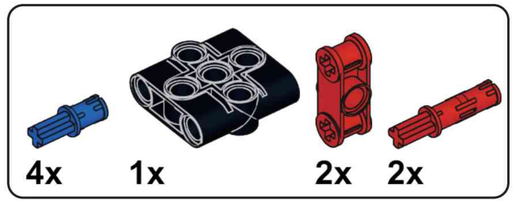

B33

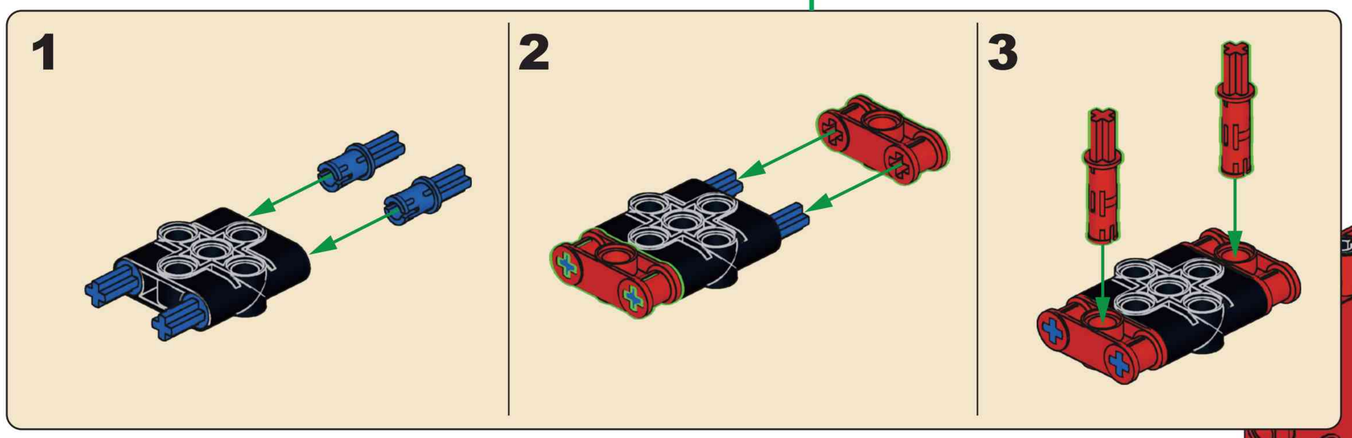

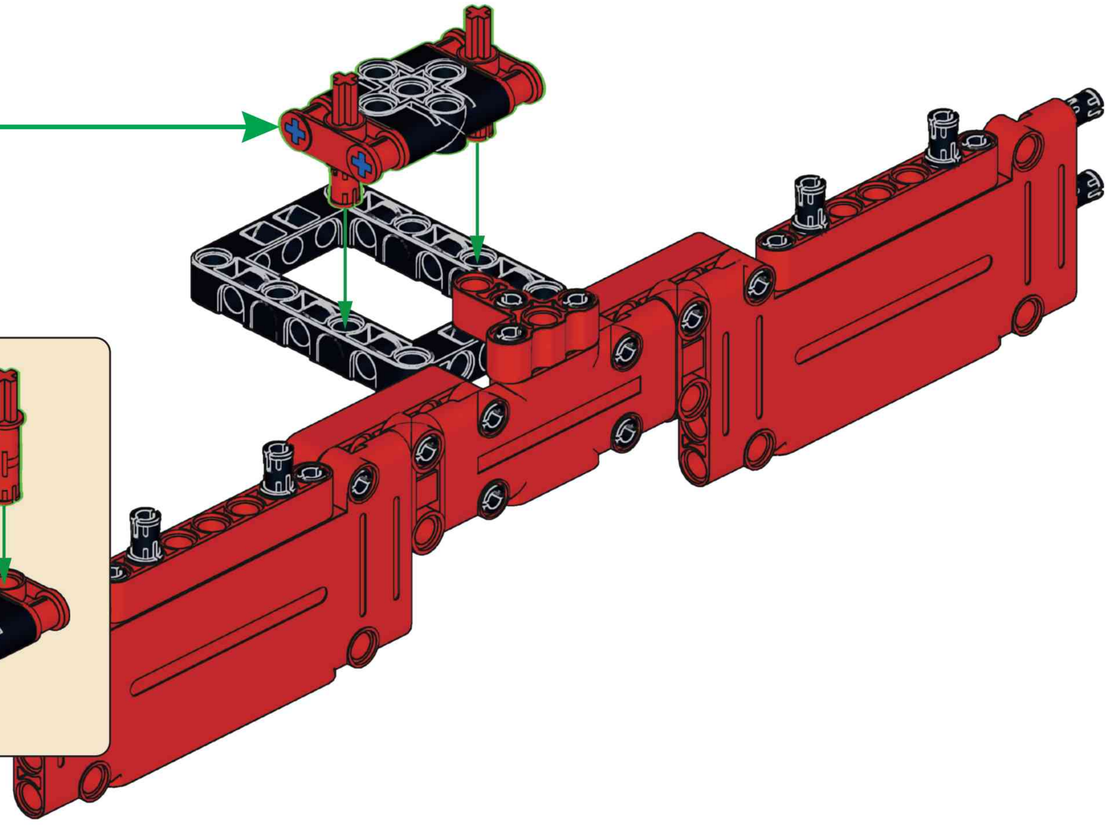

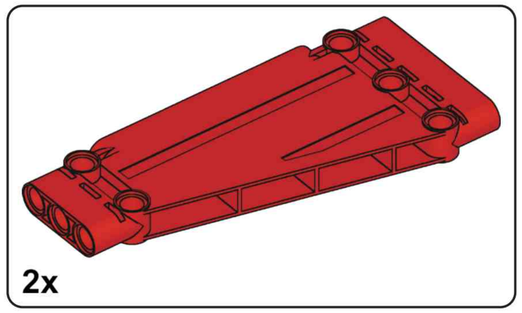

B34

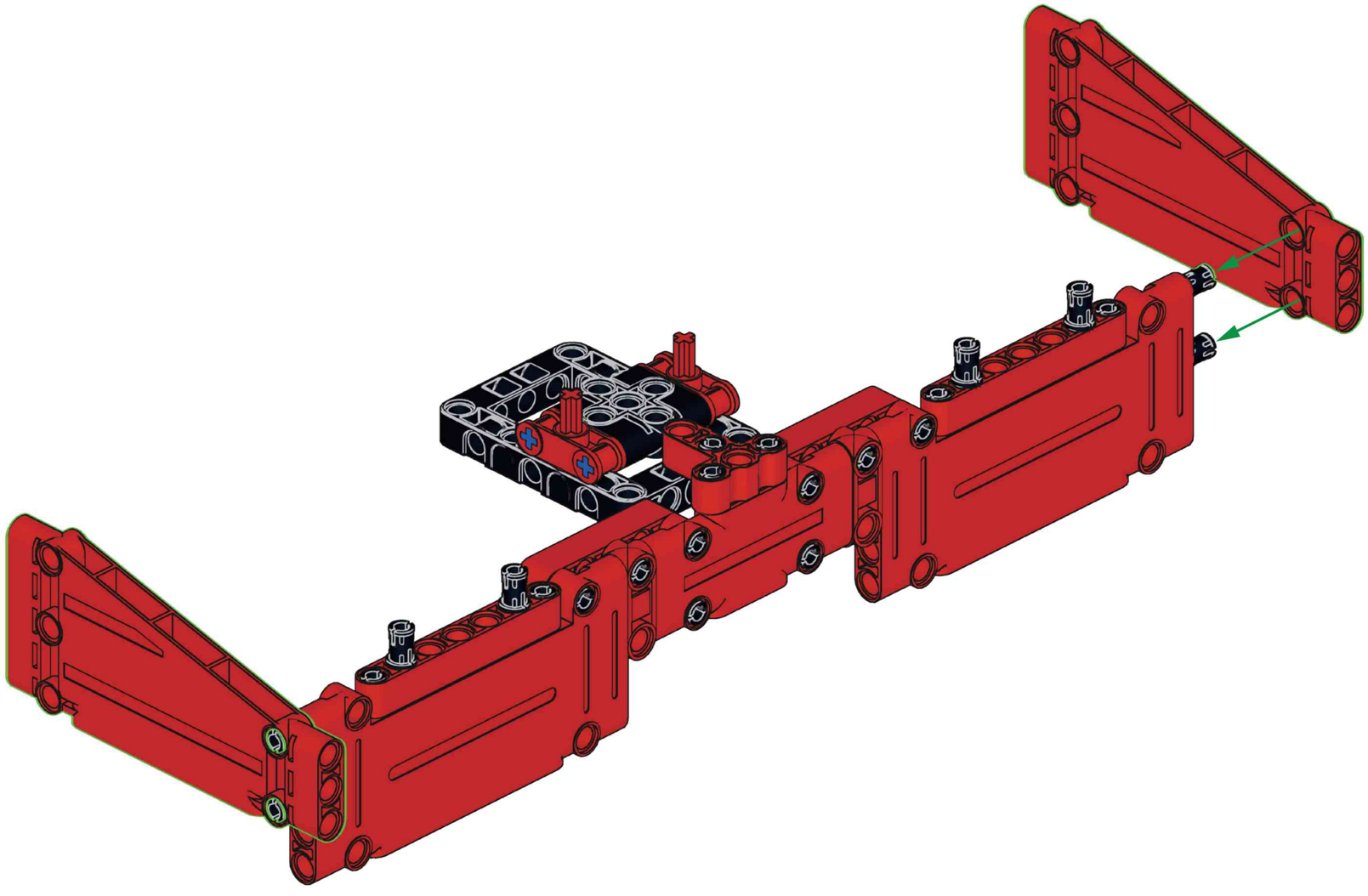

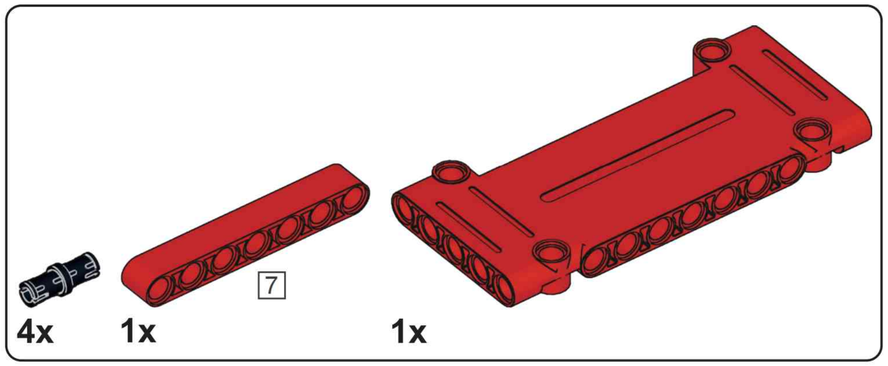

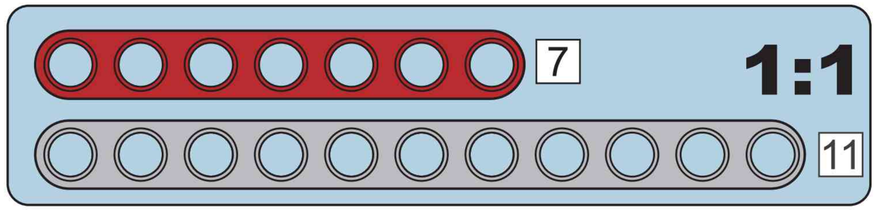

B35

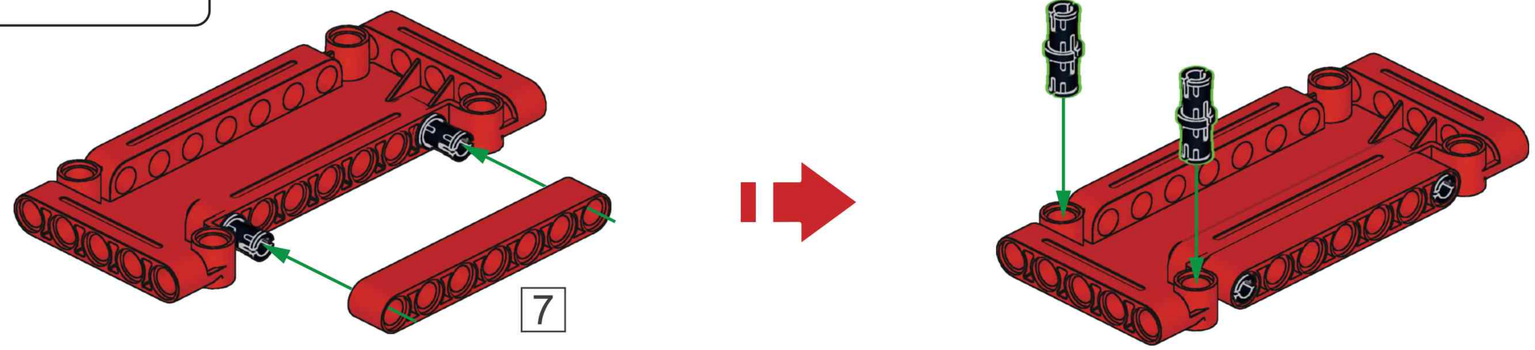

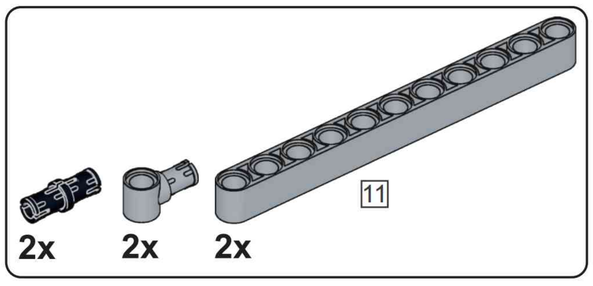

B36

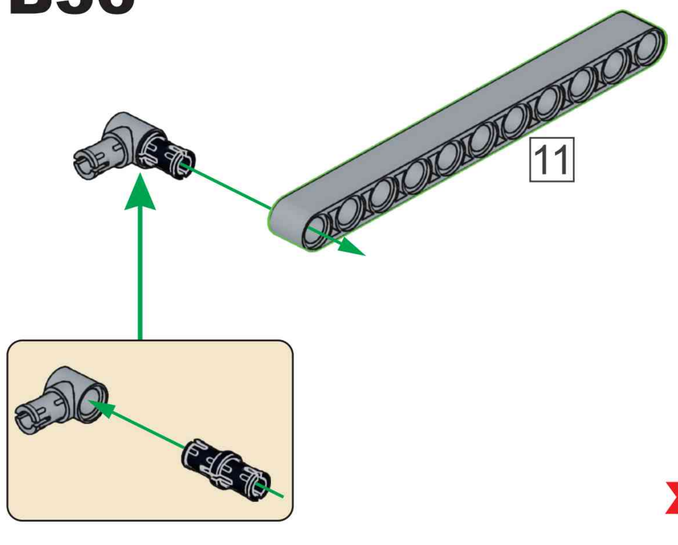

x2

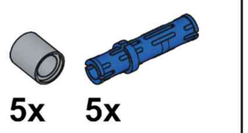

B37

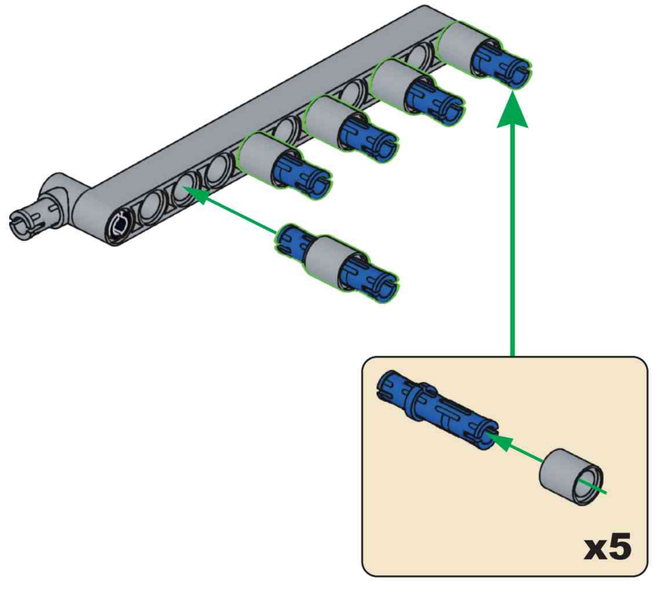

B38

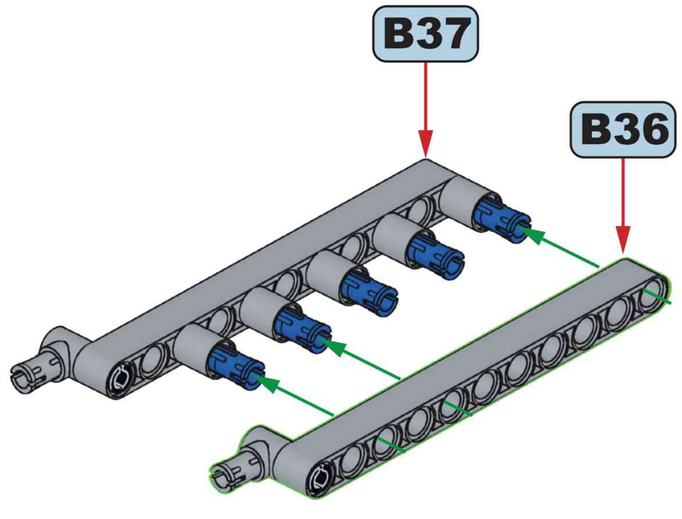

B39

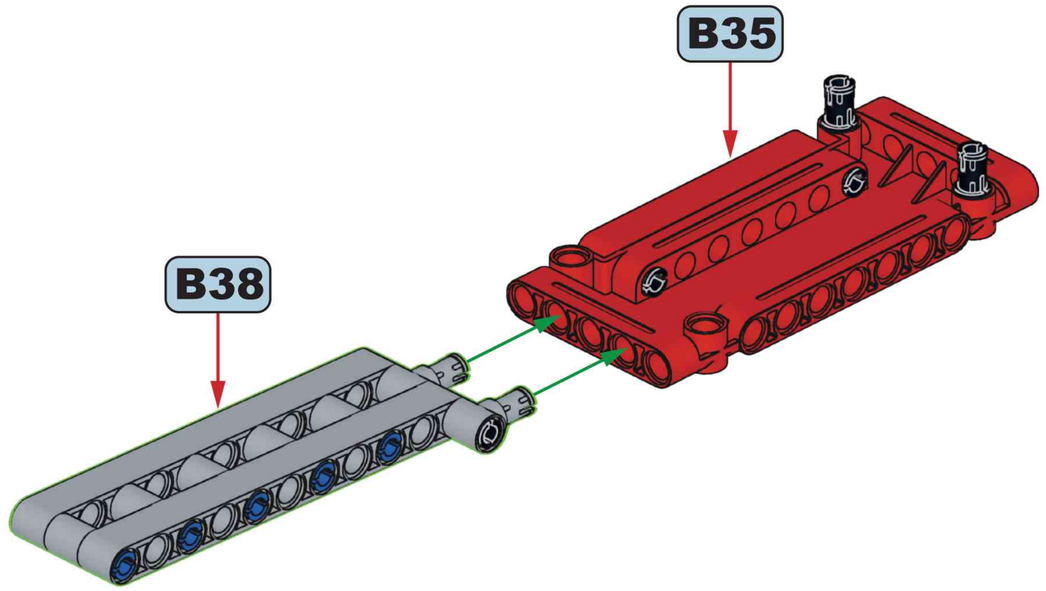

B40

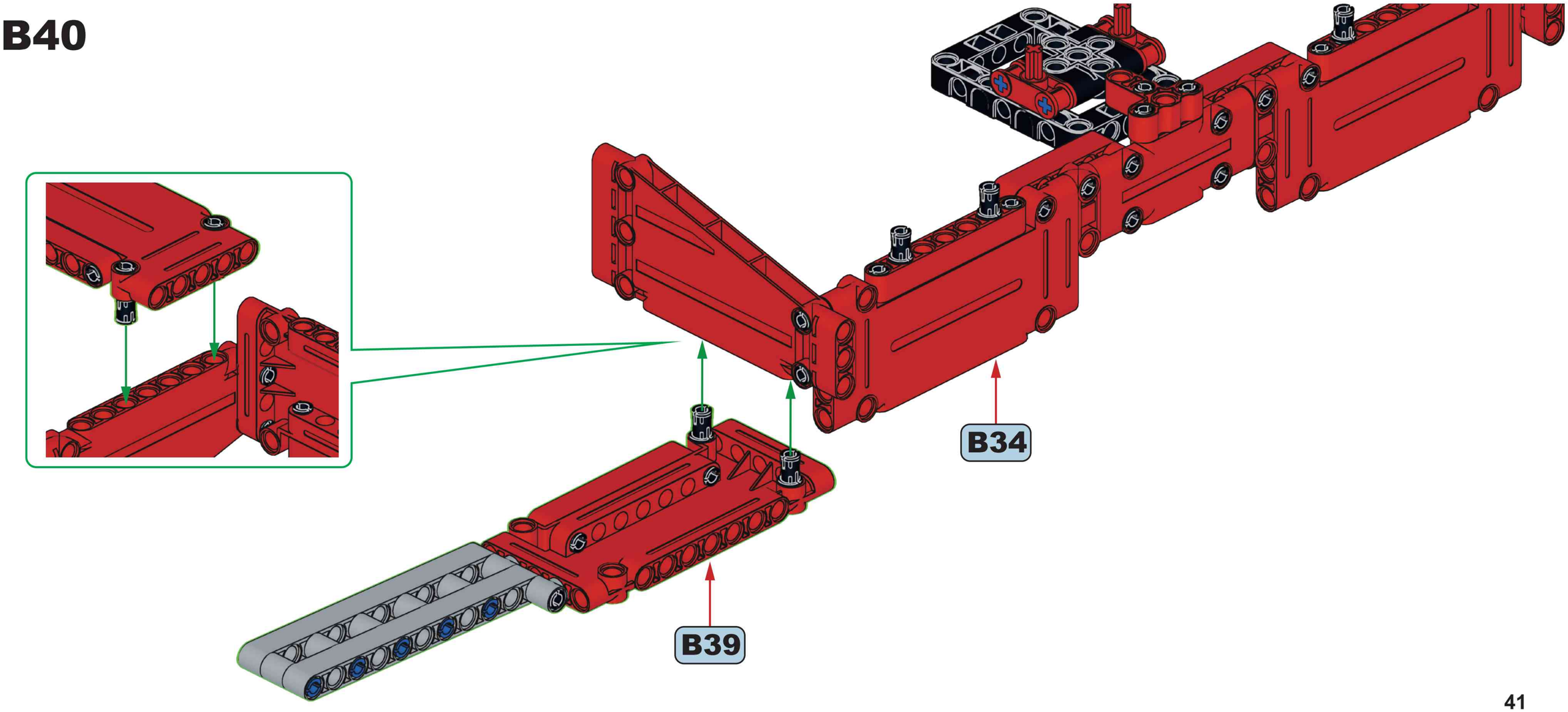

B41

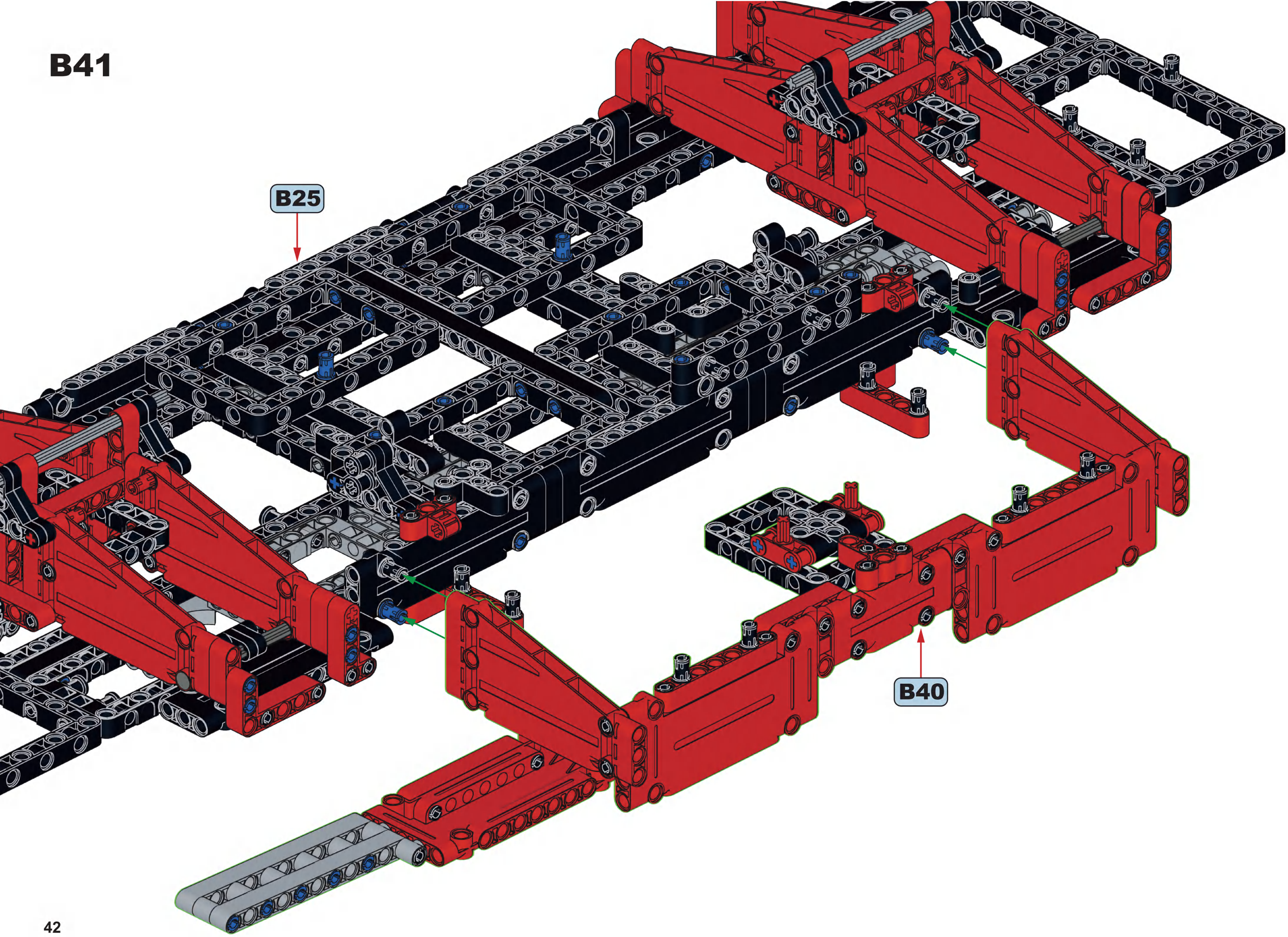

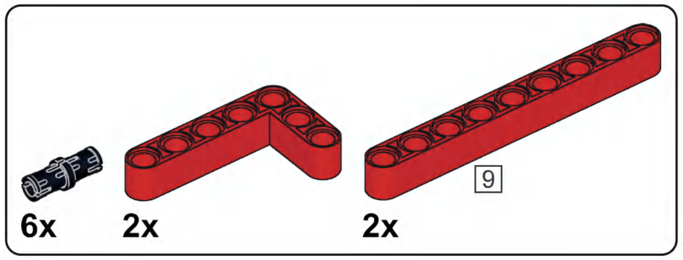

B42

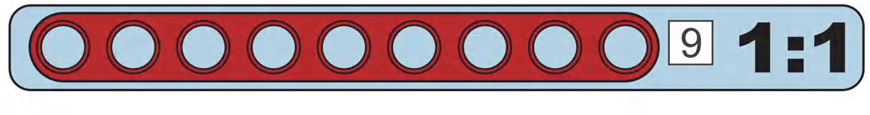

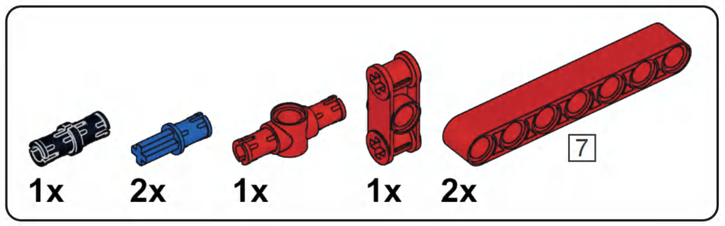

B43

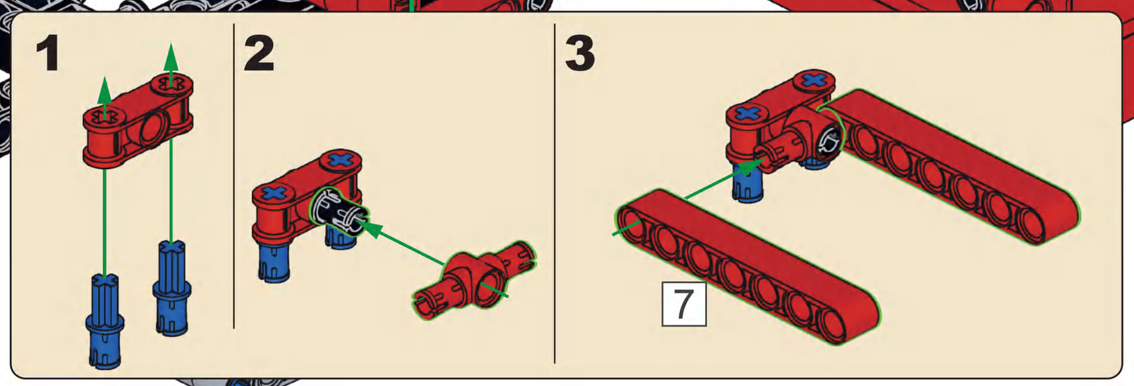

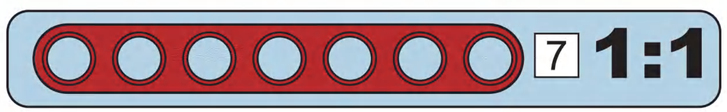

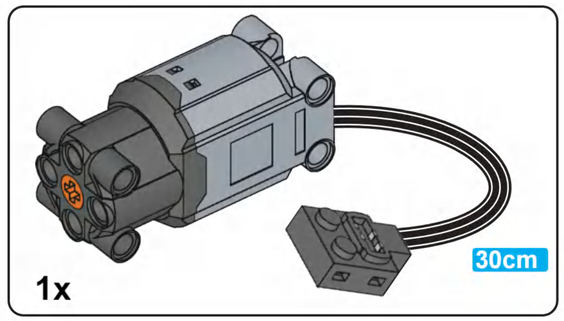

1x

B44

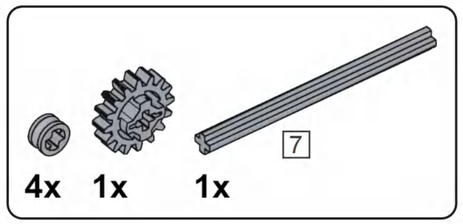



B45

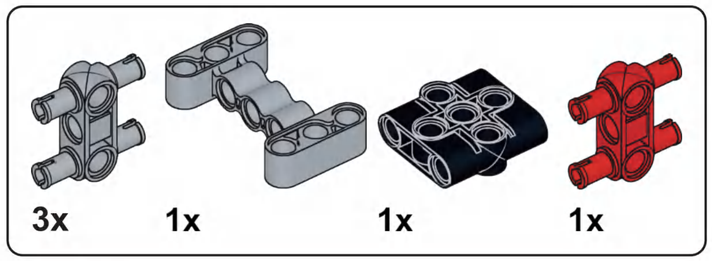

B46

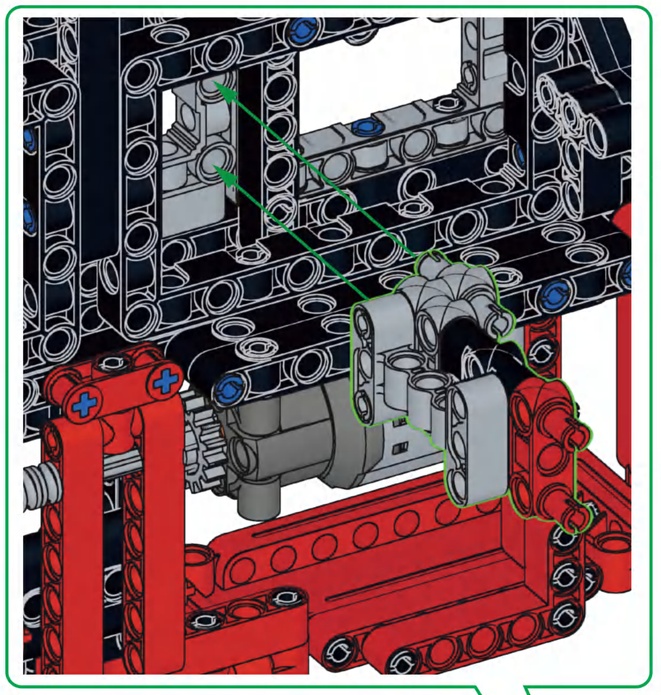

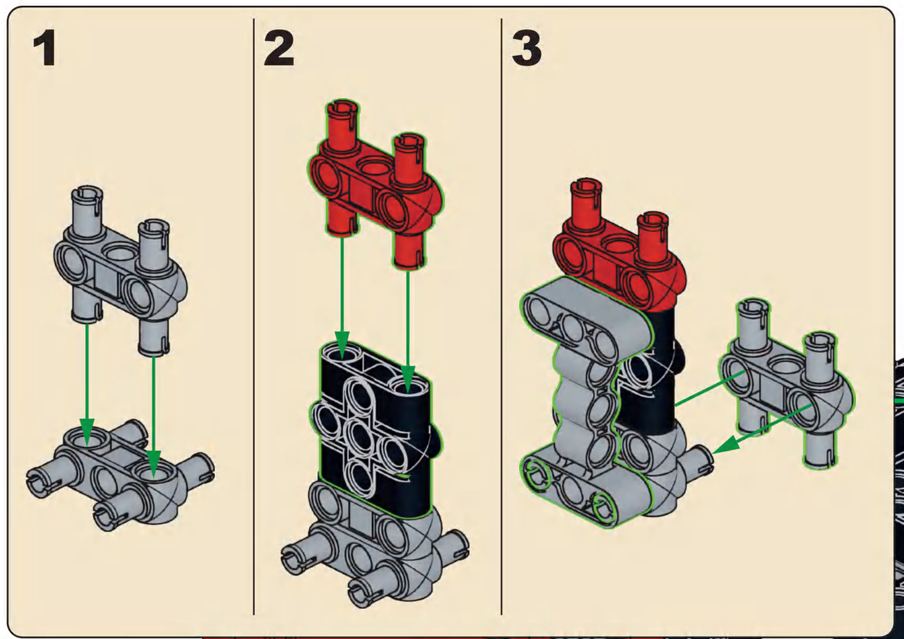

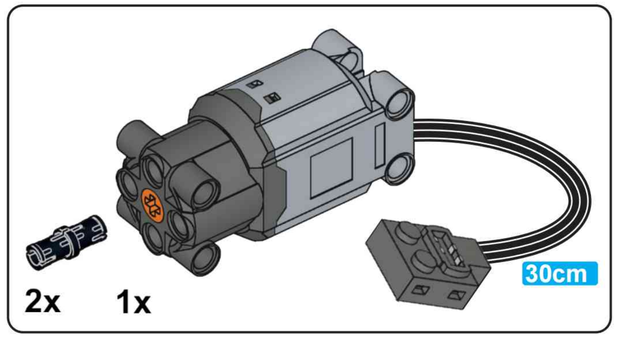

B47

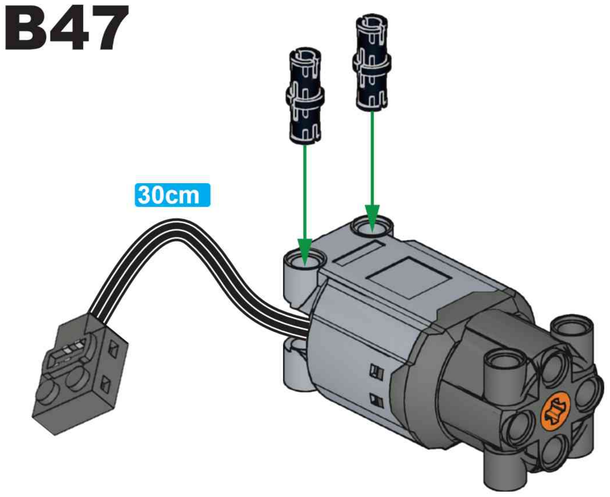

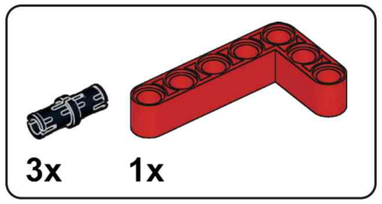

B48

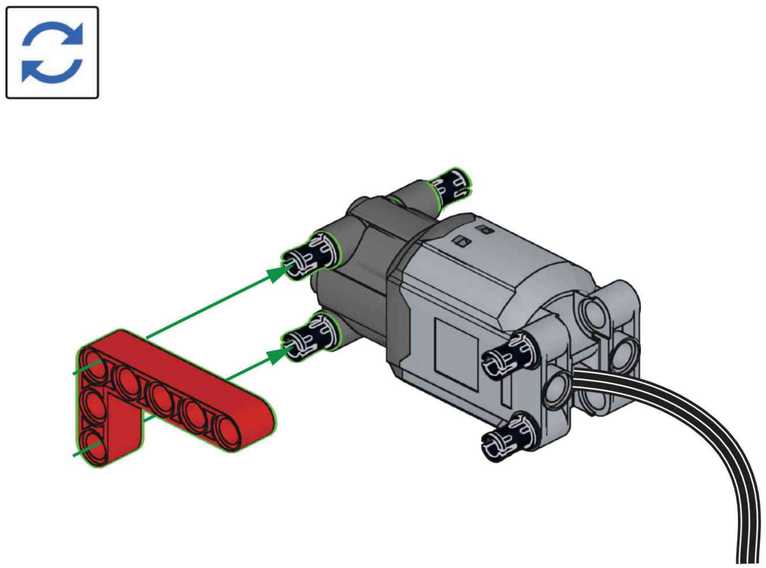

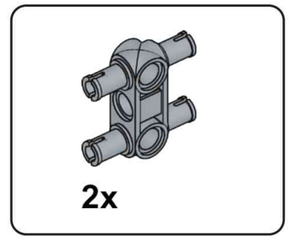

B49

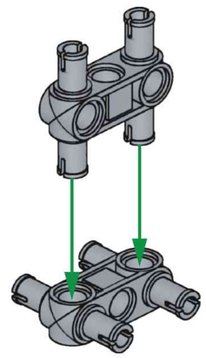

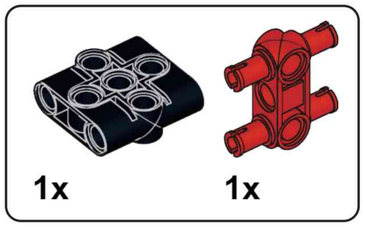

B50

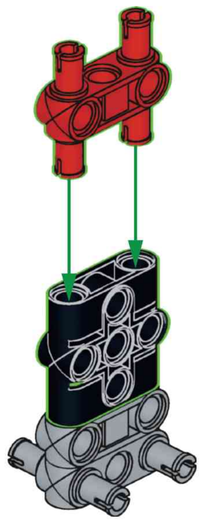

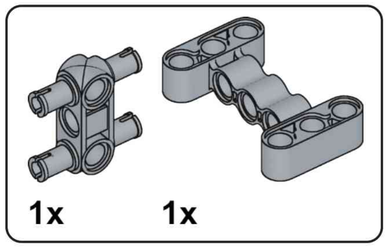

B51

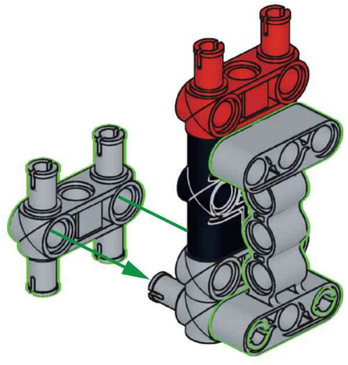

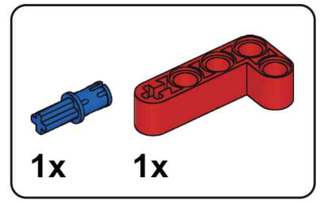

B52

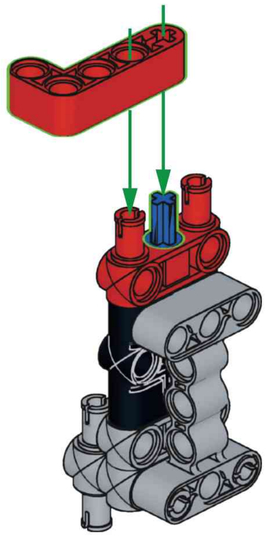

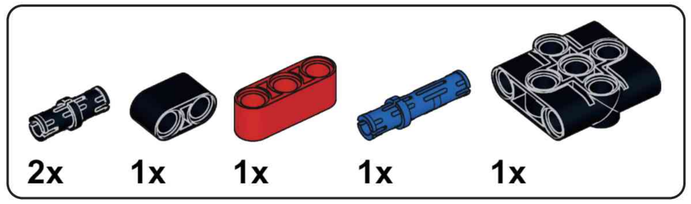

B53

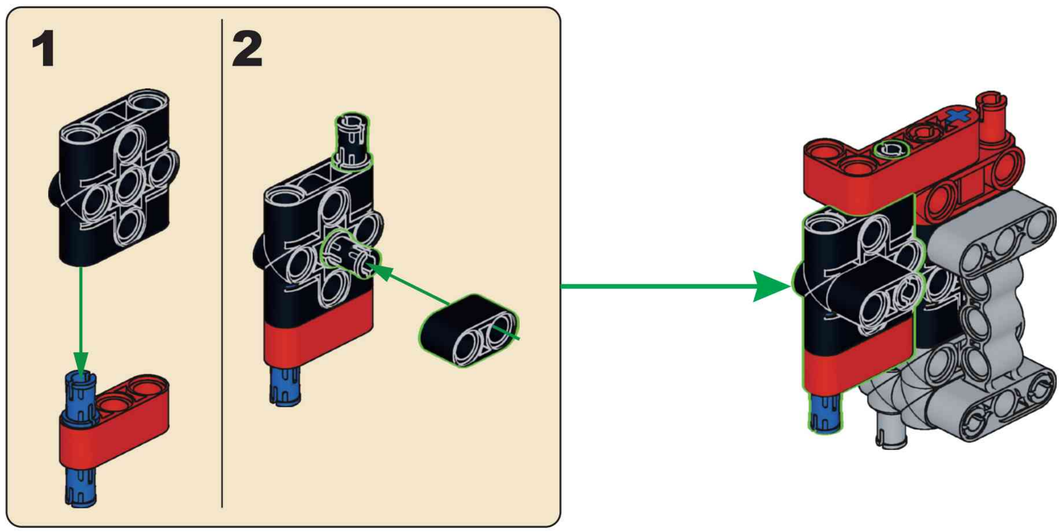

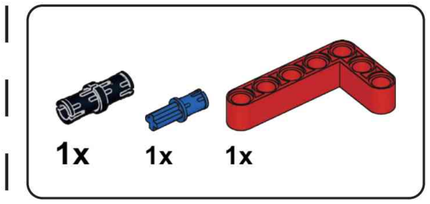

B54

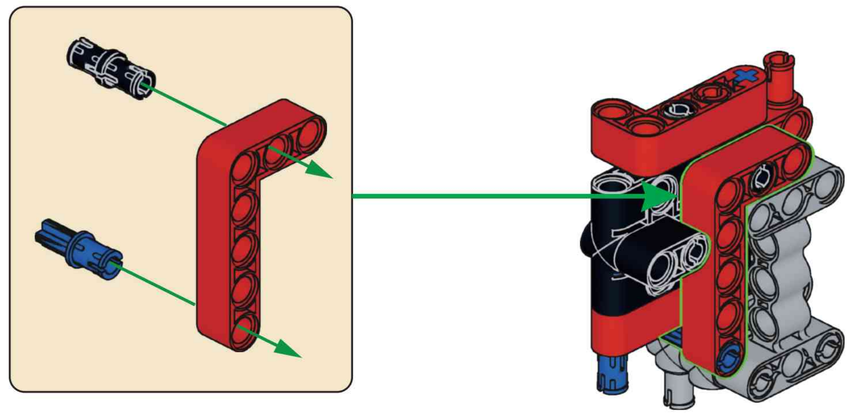

B55

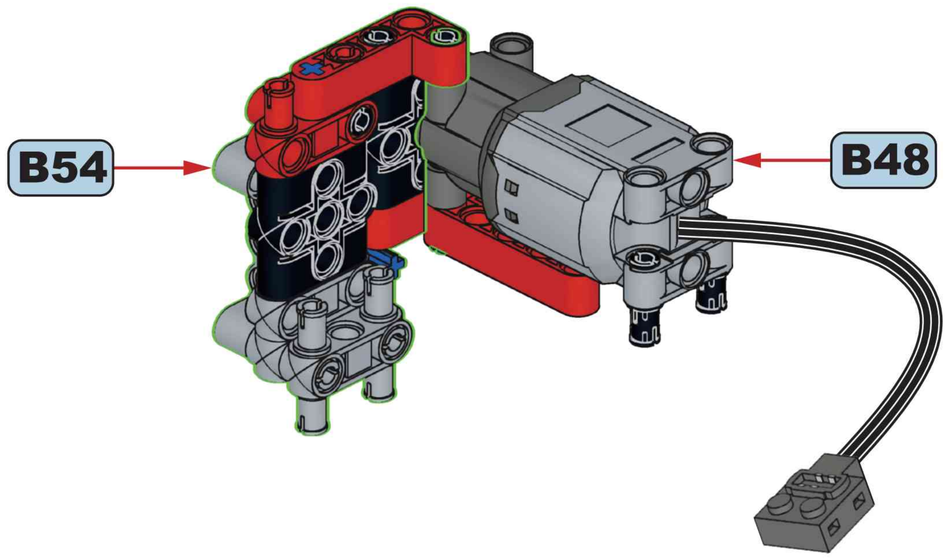

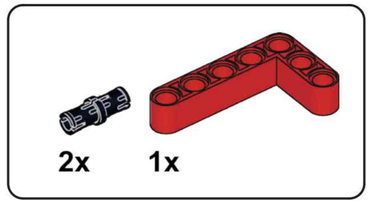

B56

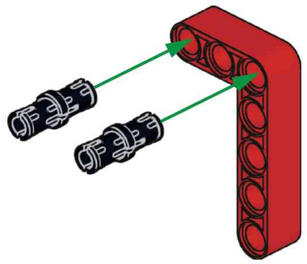

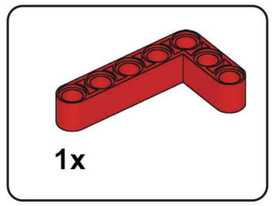

B57

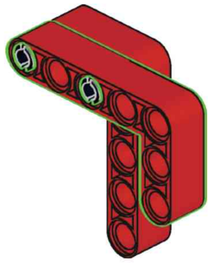

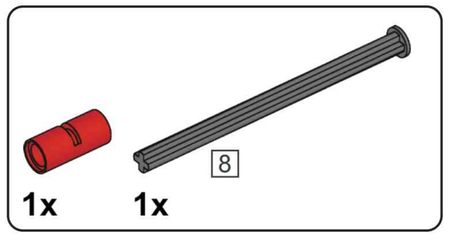

B58

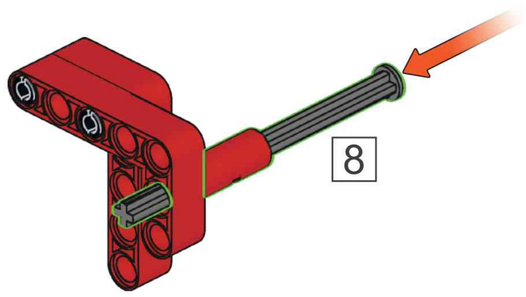

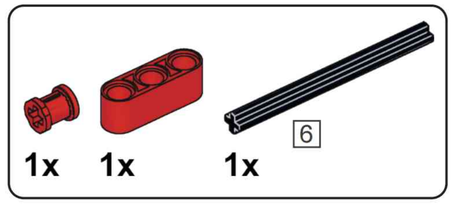

B59



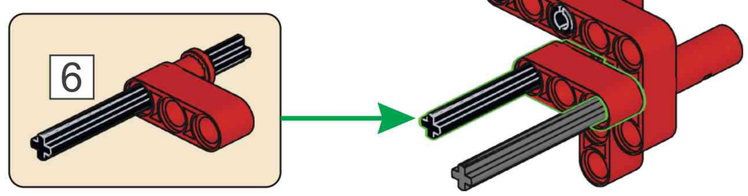

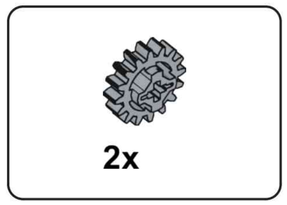

B60

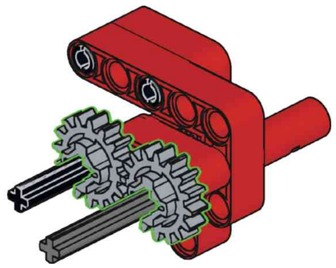

B61

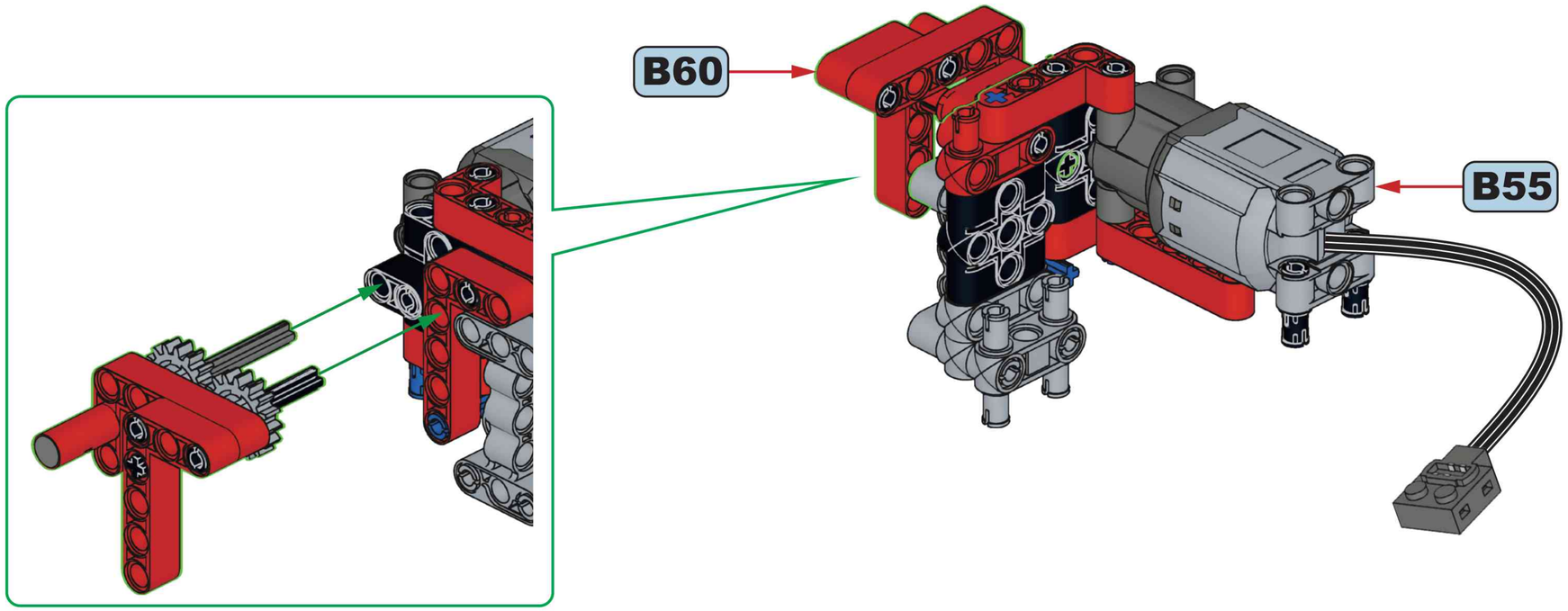

B62

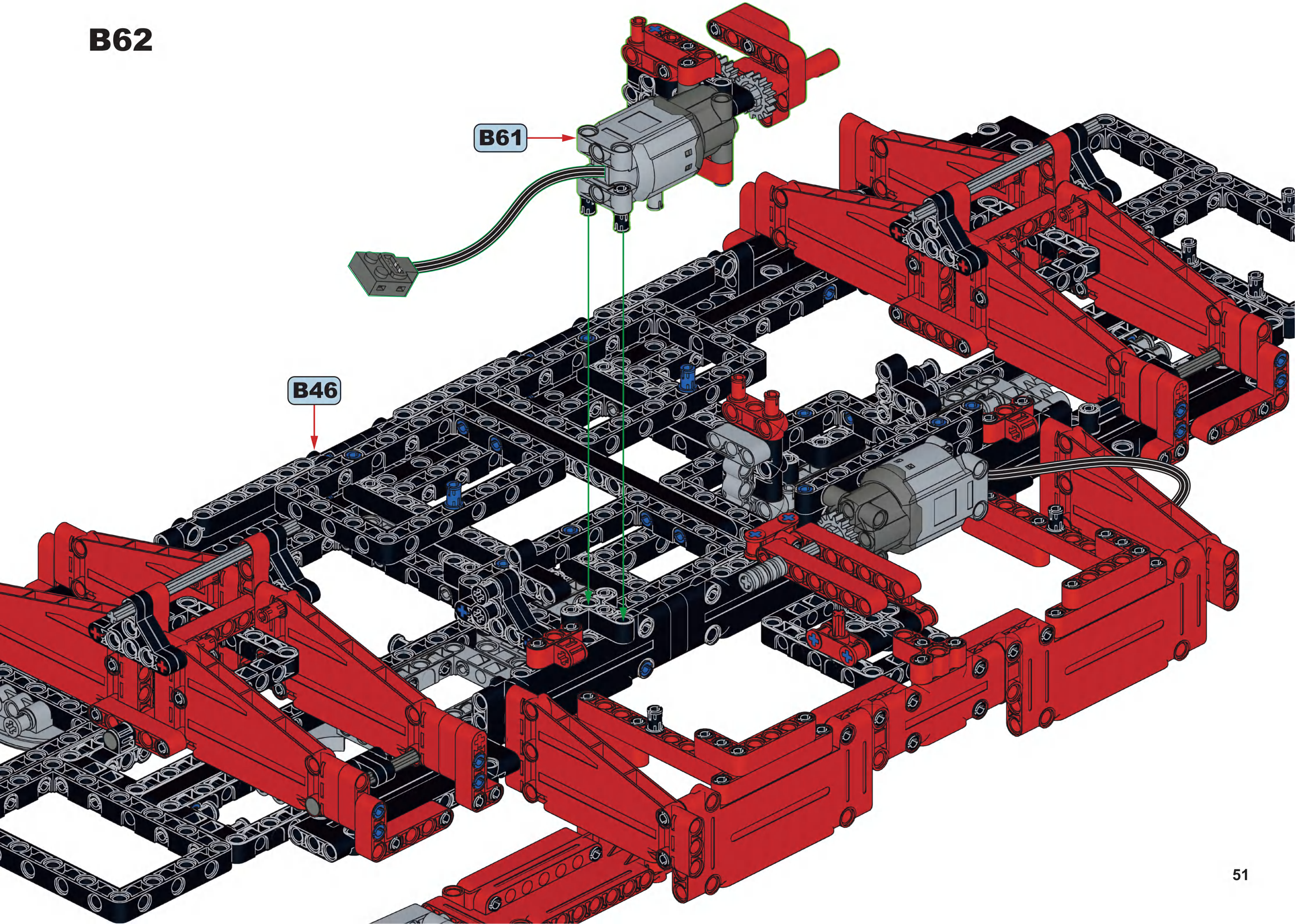

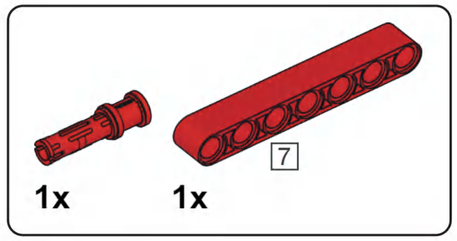

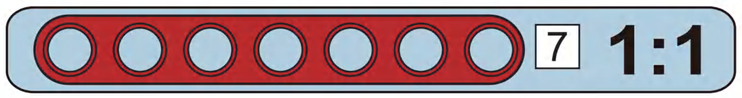

B63

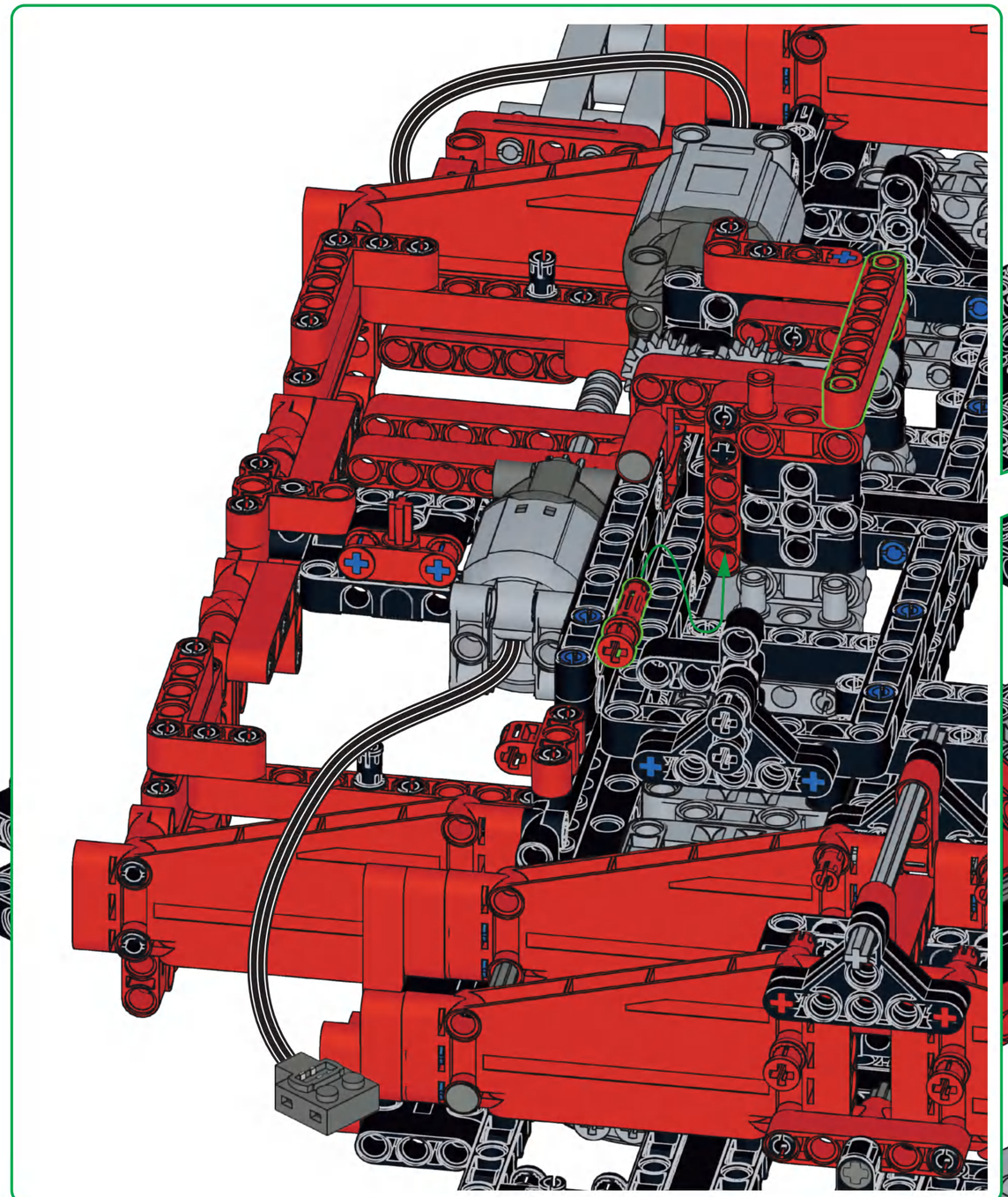

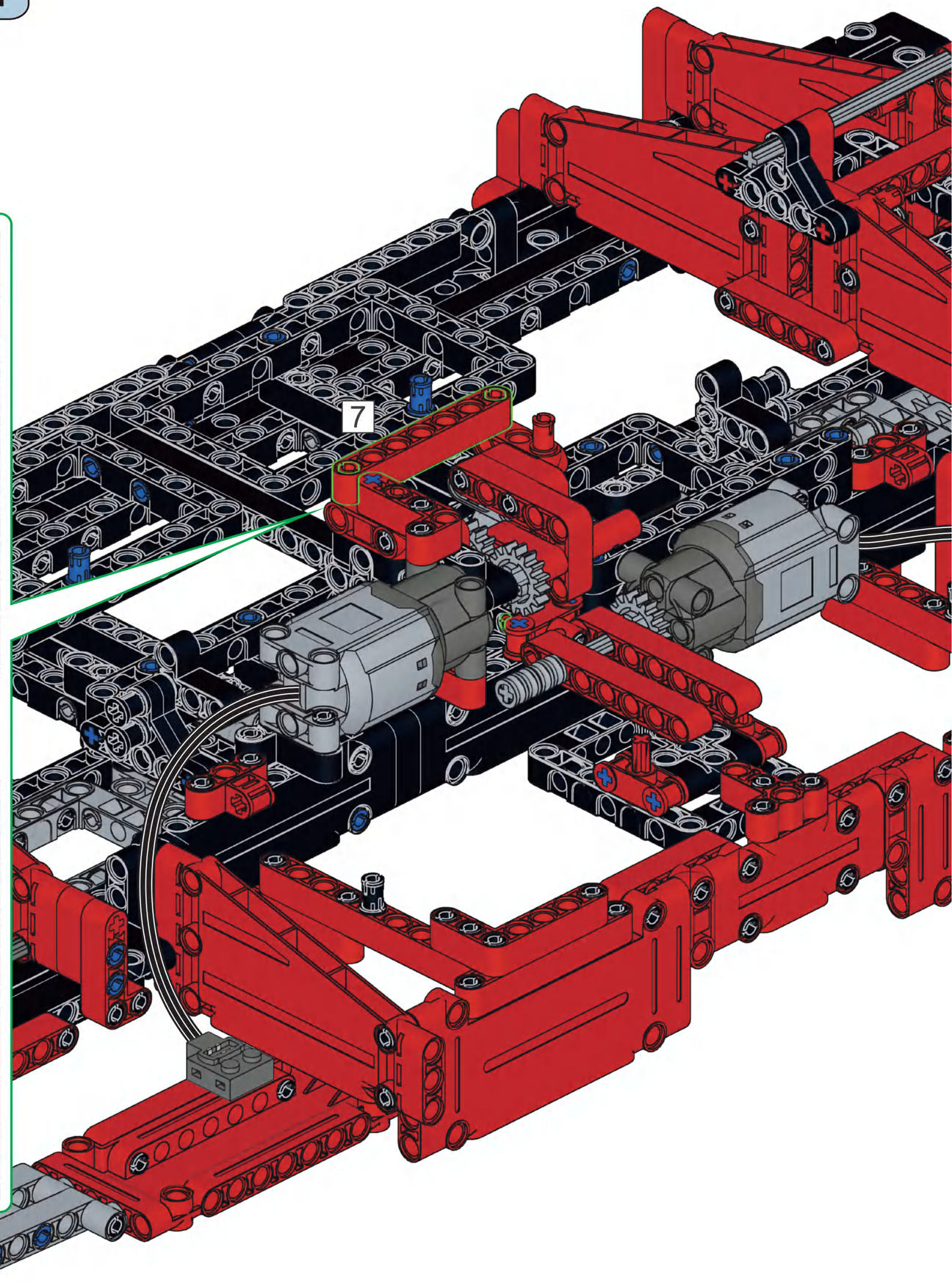

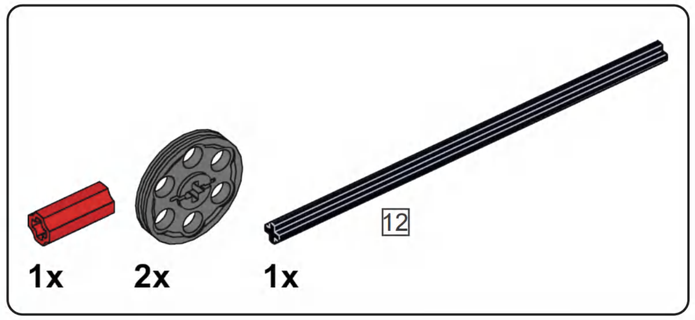

B64

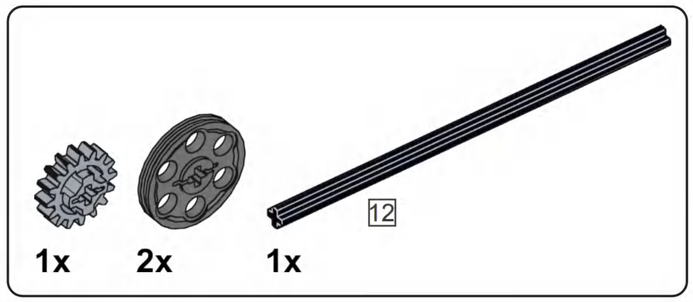

B65

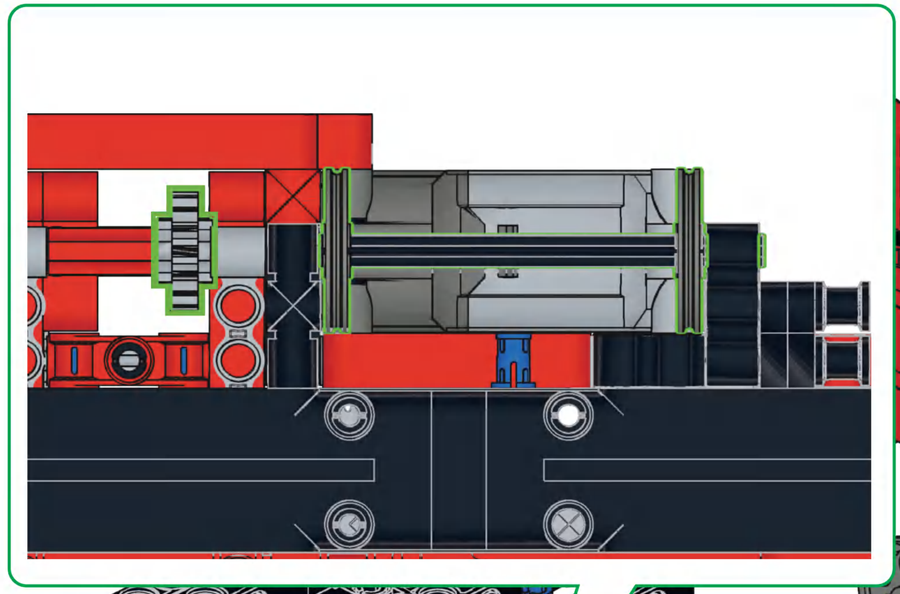

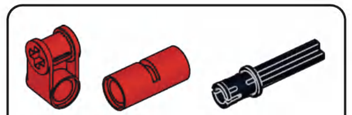

B66

2x

B 67

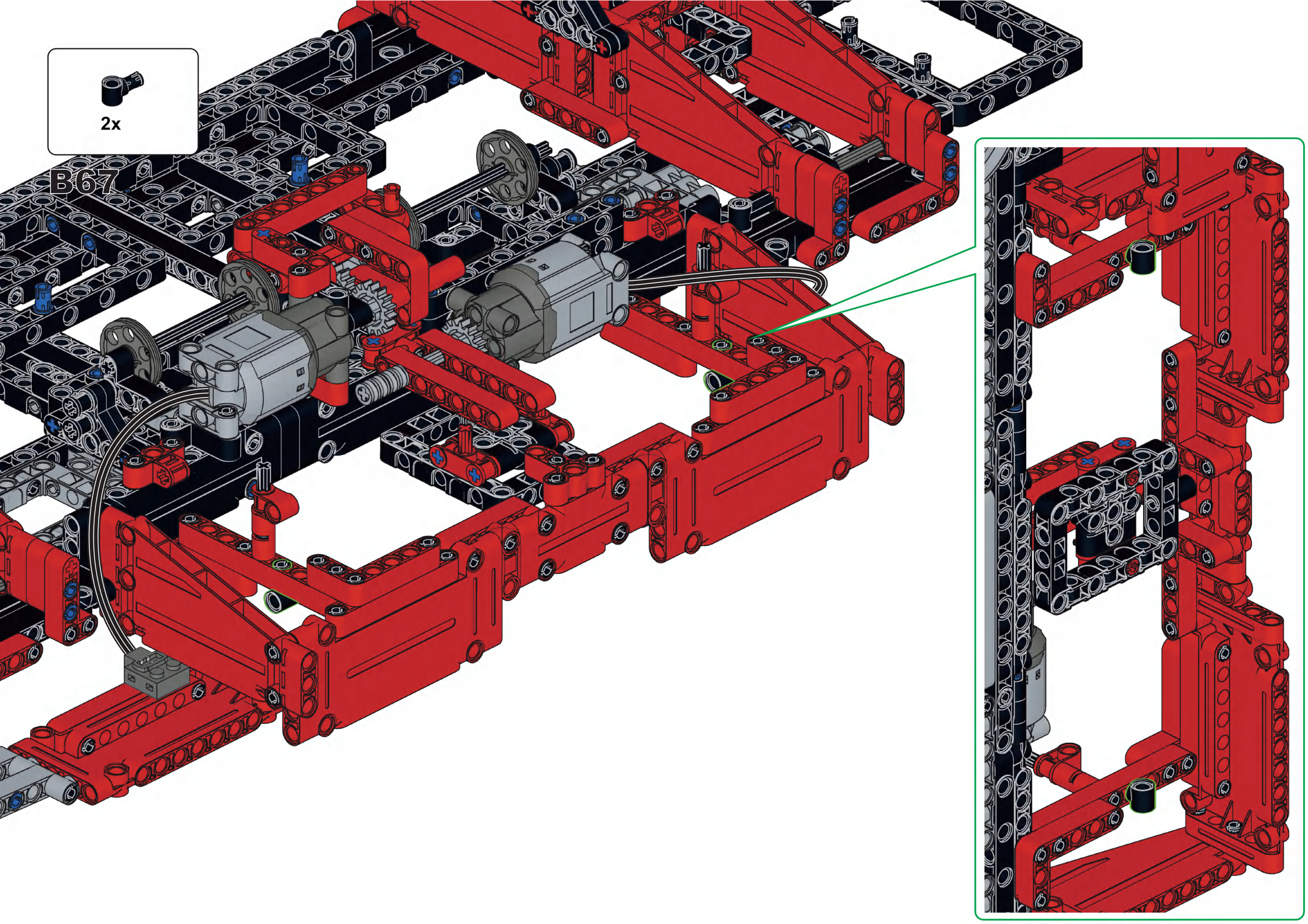

2x 2x

B68

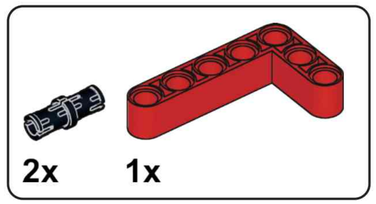

B69

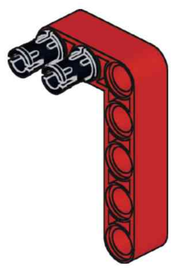

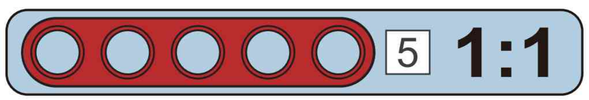

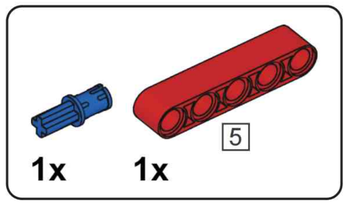

B70

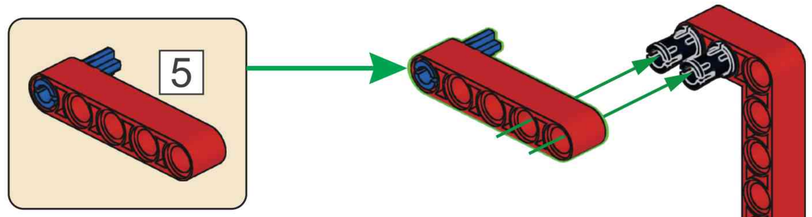

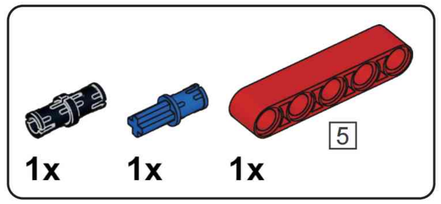

B71

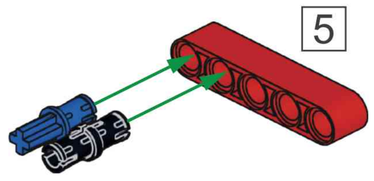

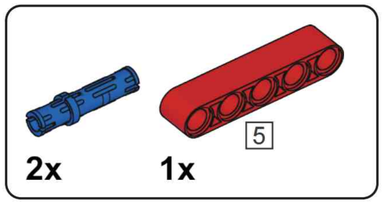

B72

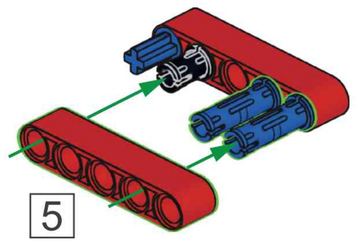

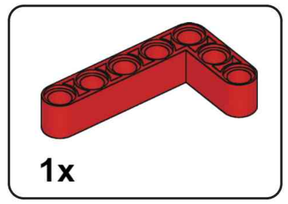

B73

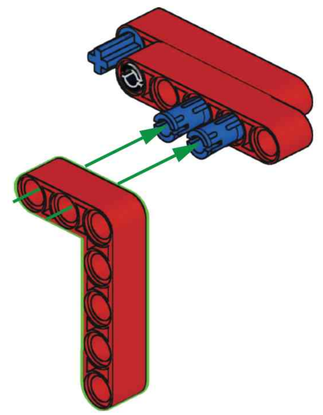

B74

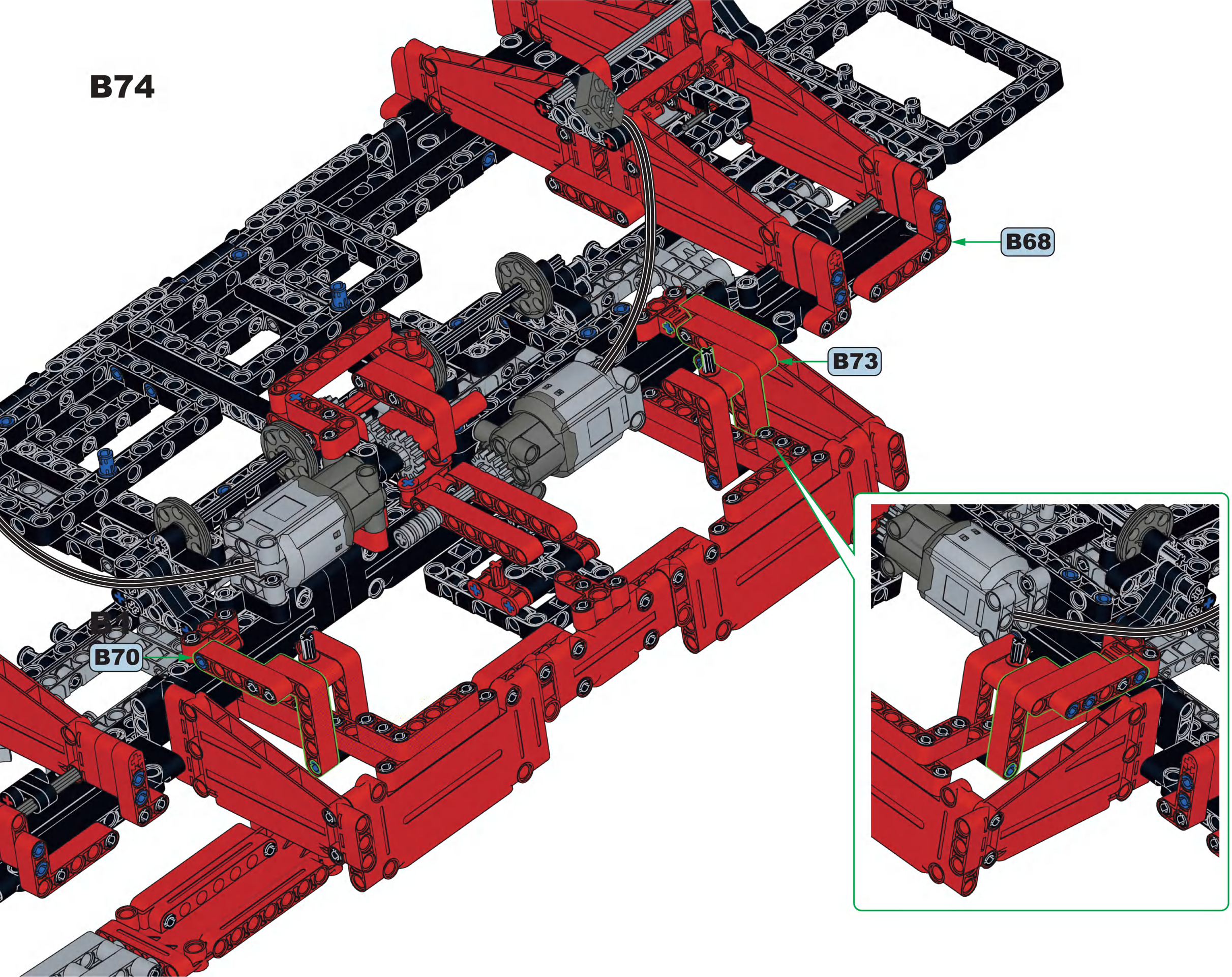

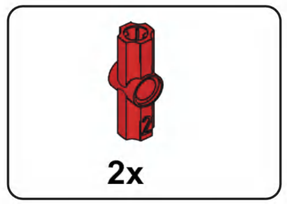

B75

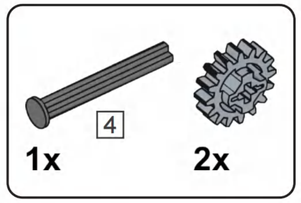

B76



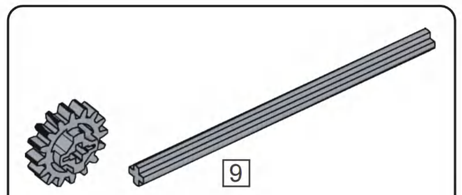

B77





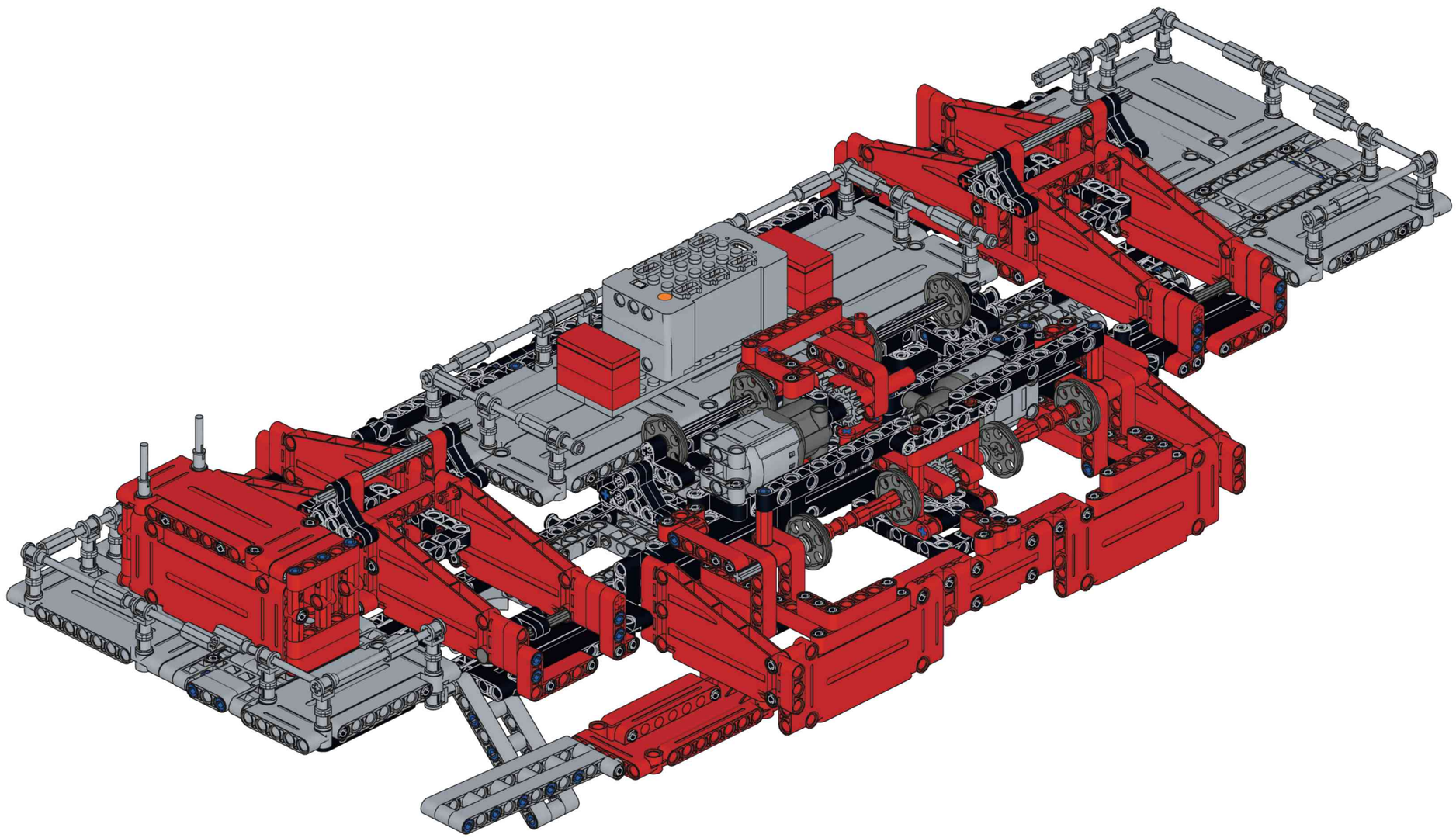

C

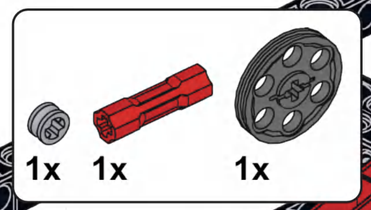

C1

1x 3x 1x 1x 9

C2

9

9 1:1

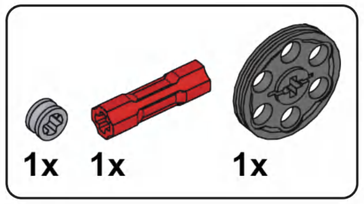

C3

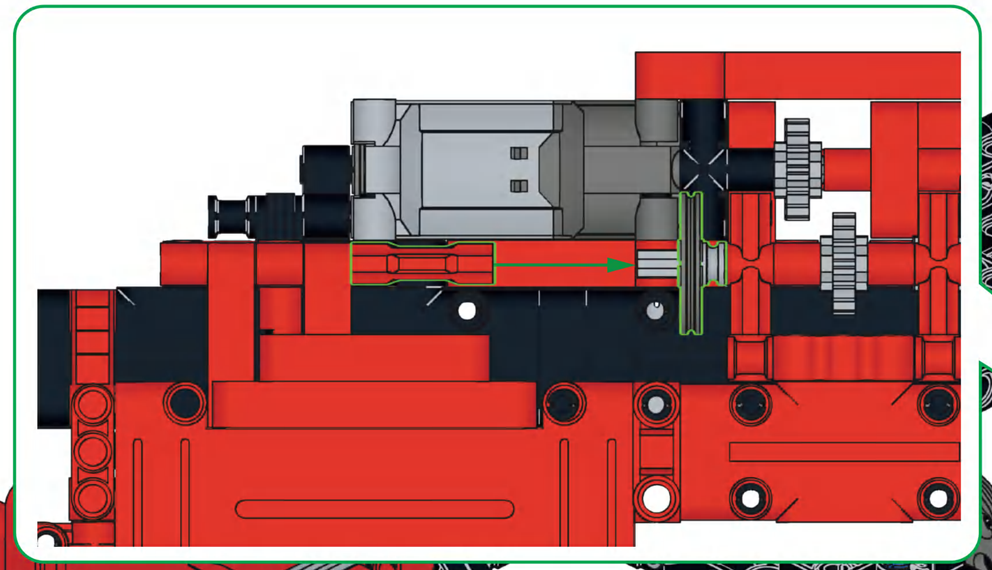

9 1:1

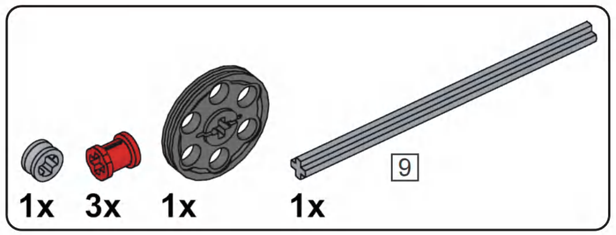

C4



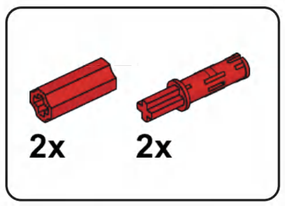

C5

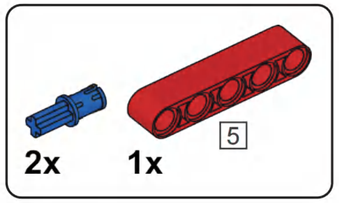

C6

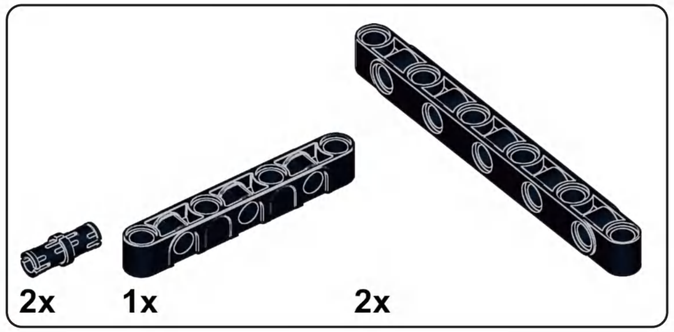

C7

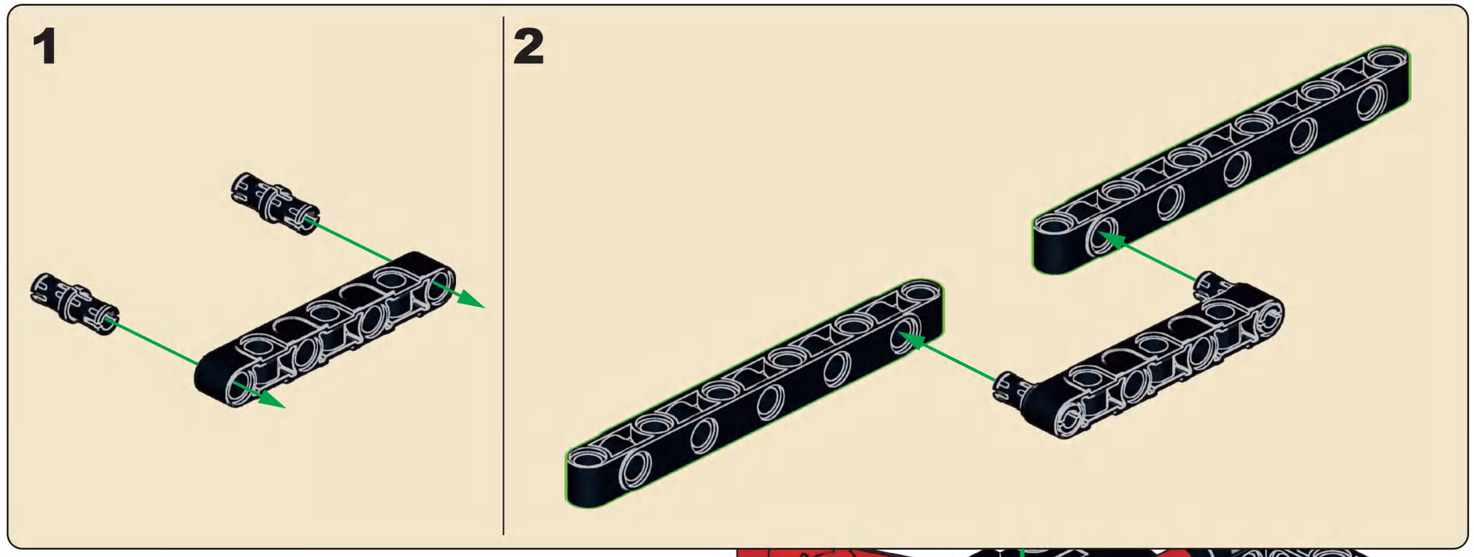

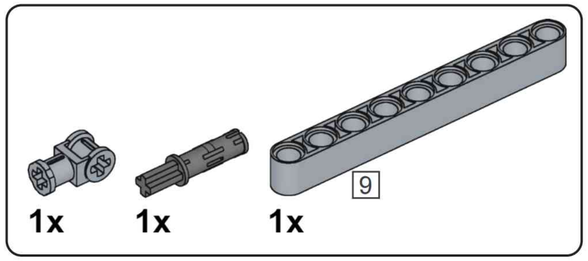

C8

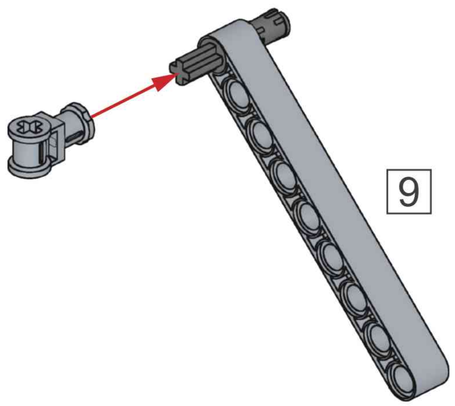

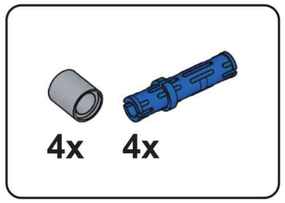

C9

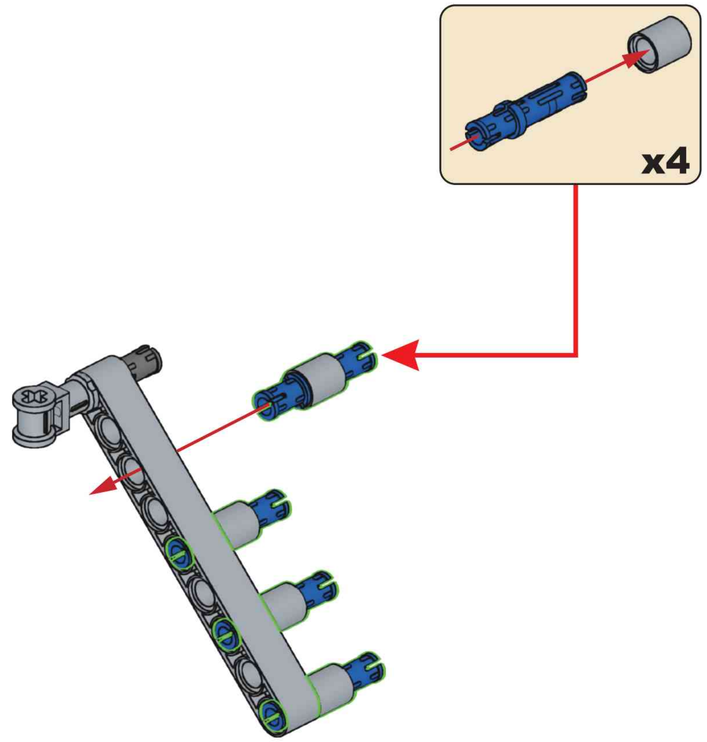

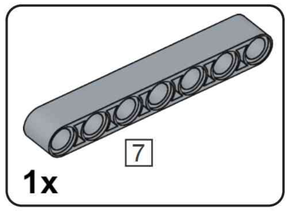

C10

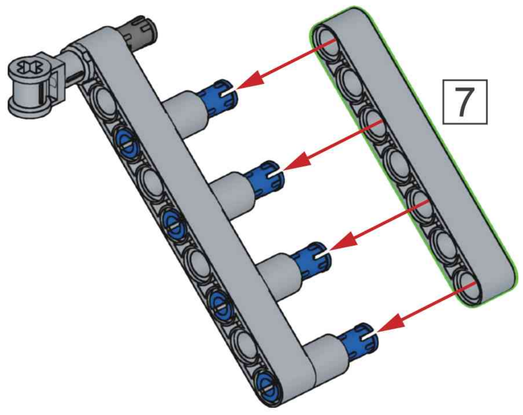

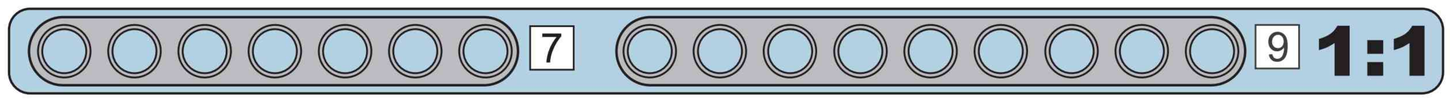

C11

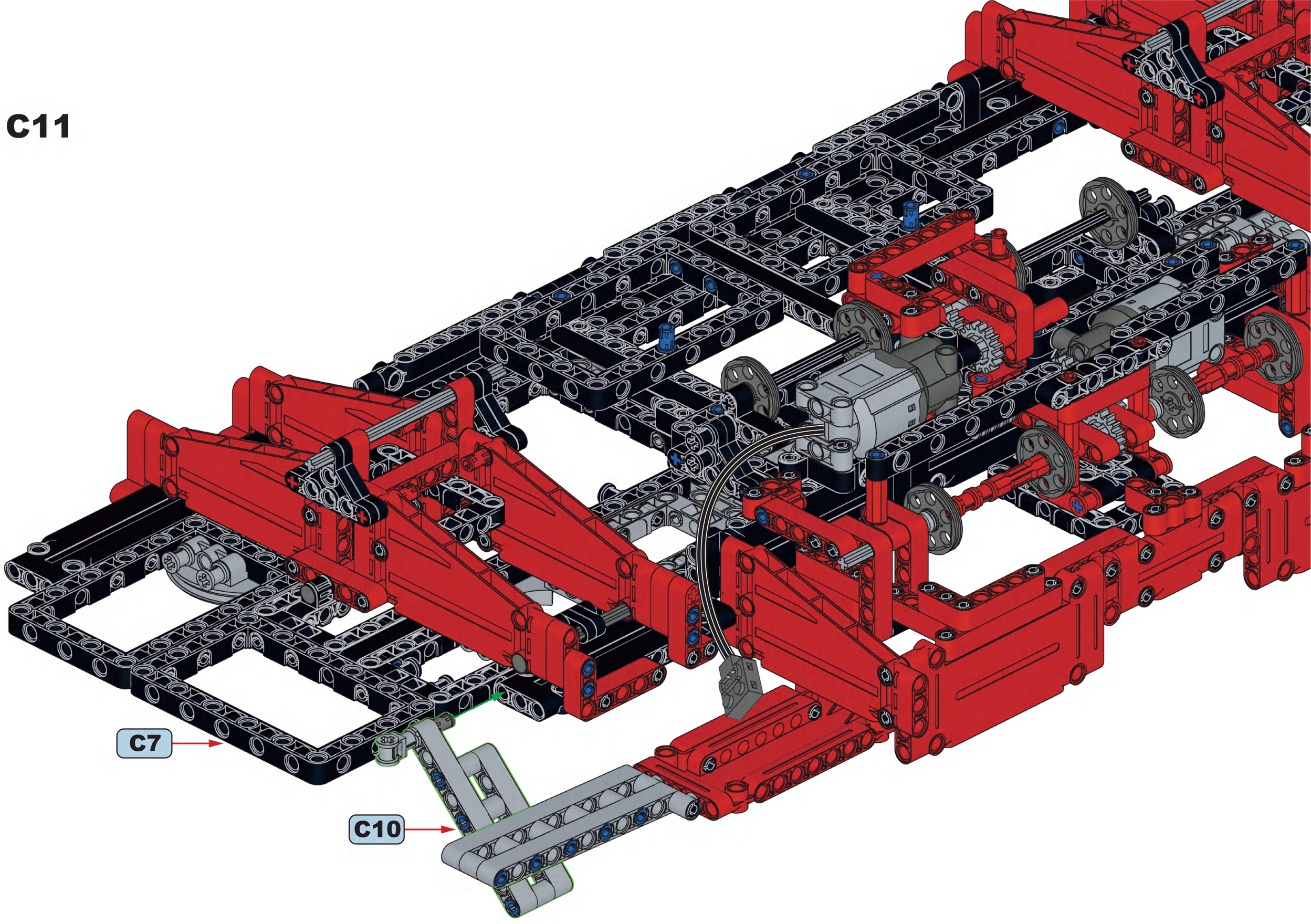

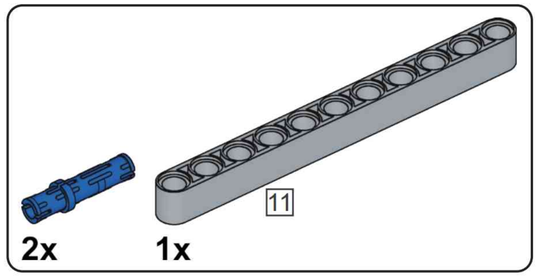

C12

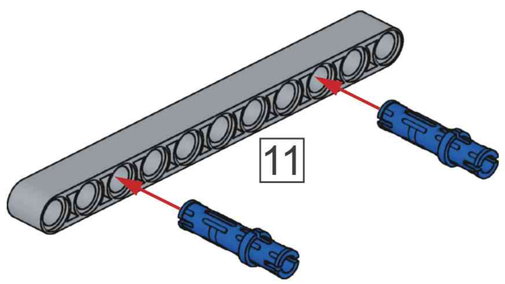

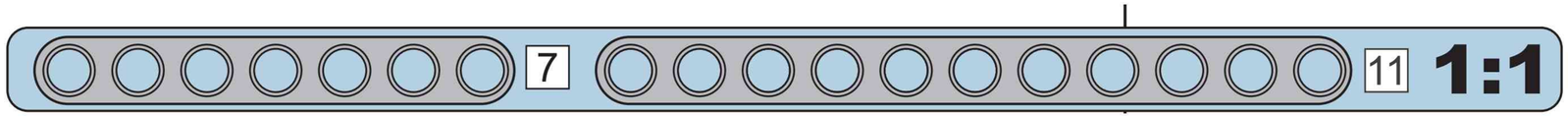

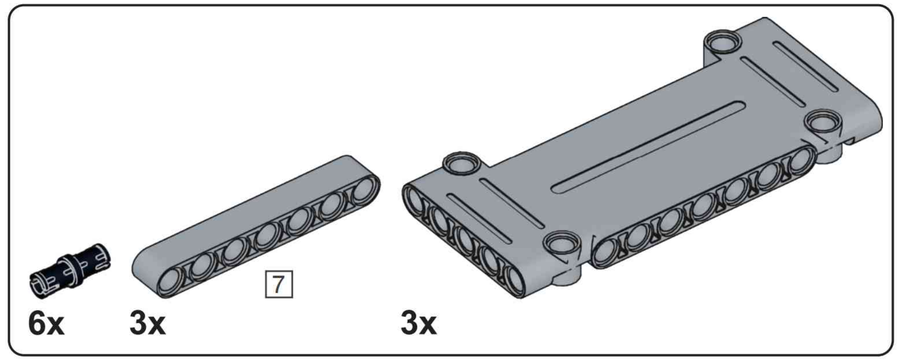

C13

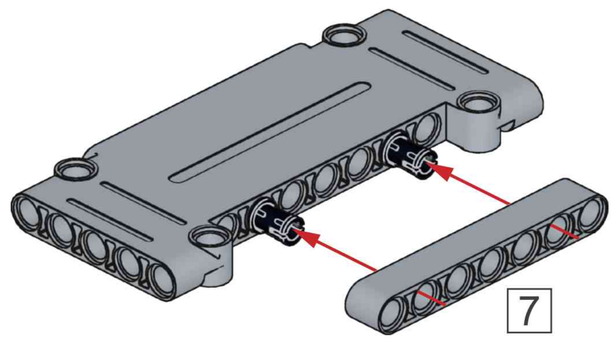

x3

C14

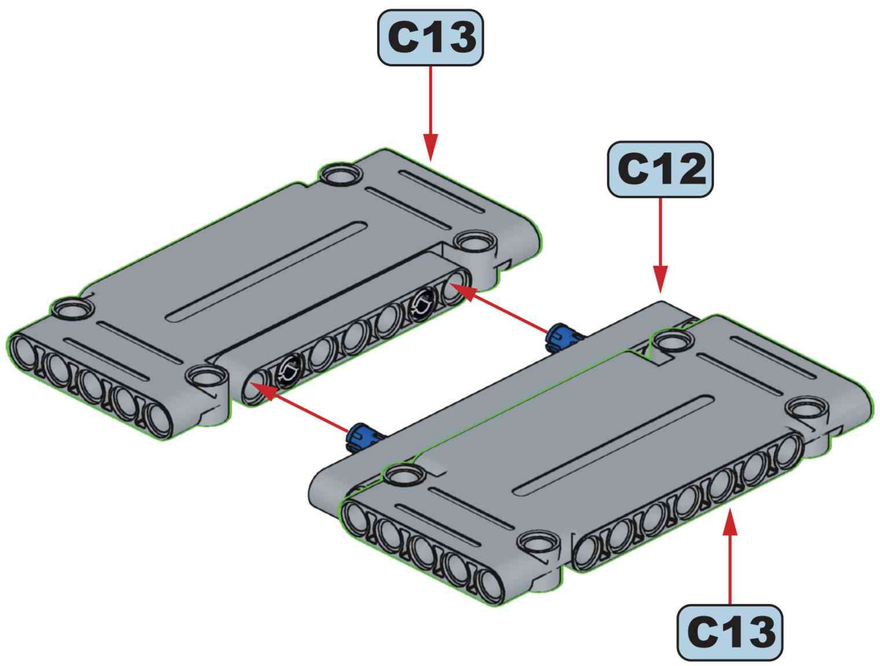

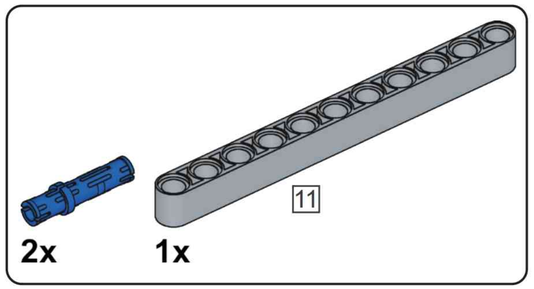

C15

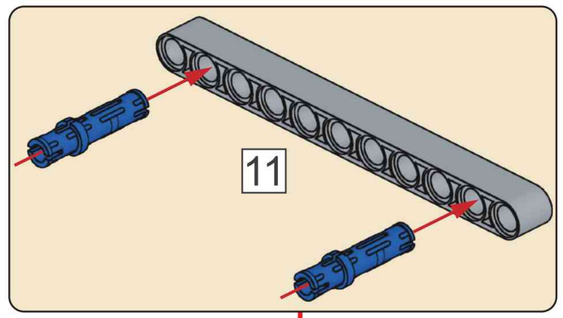

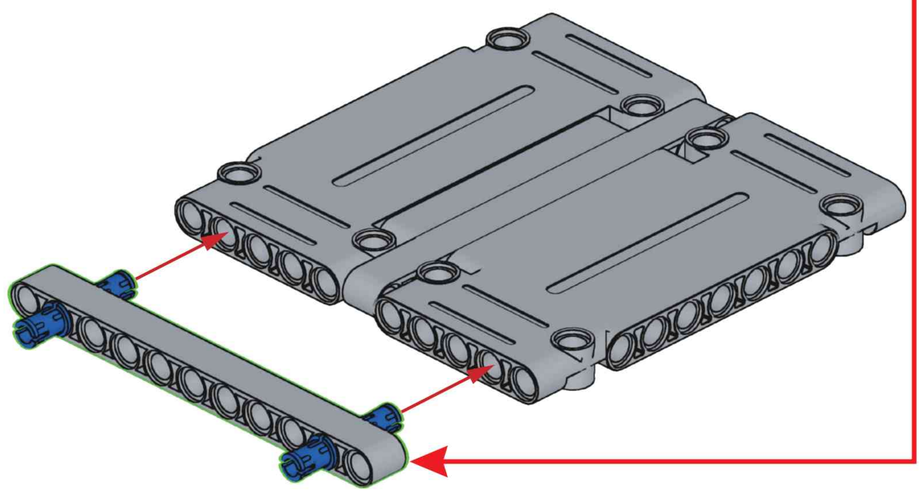

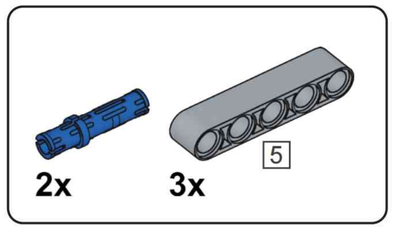

C16

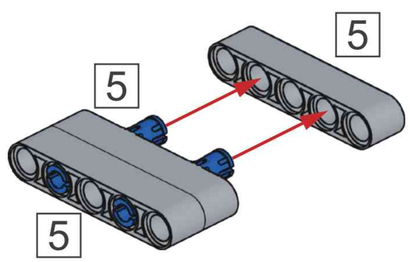

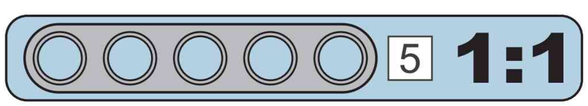

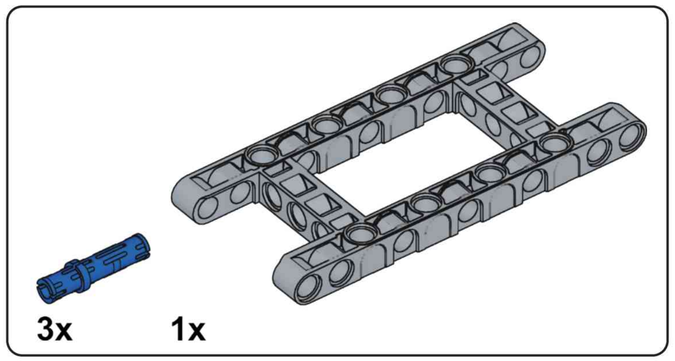

C17

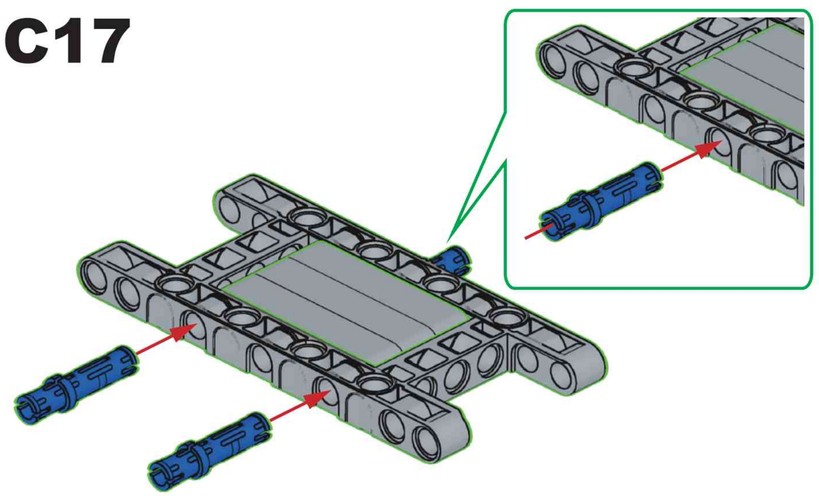

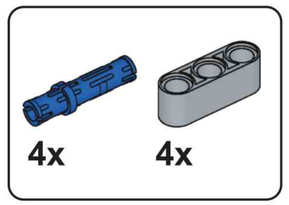

C18

C19

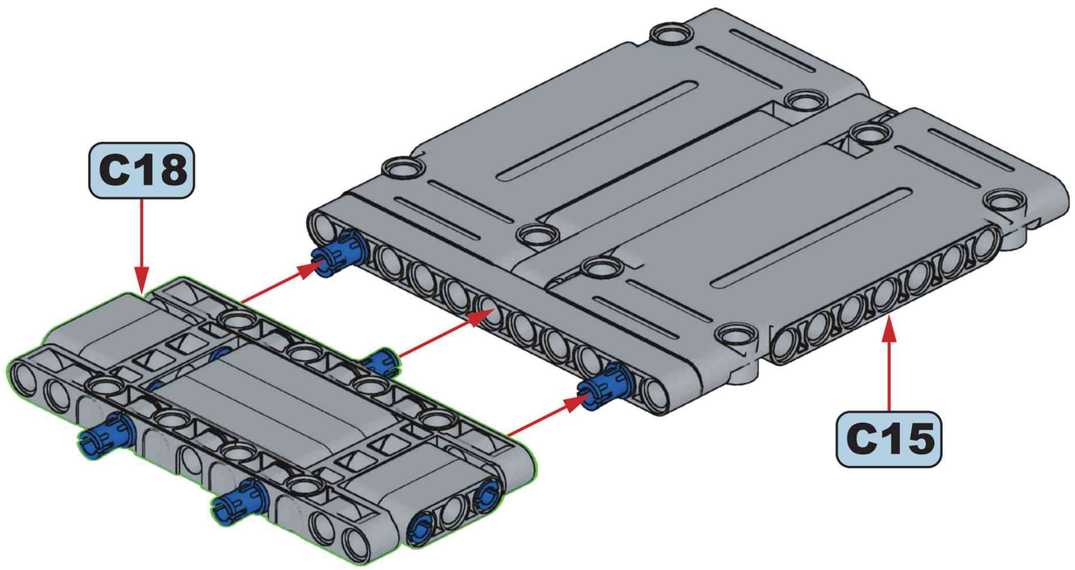

C20

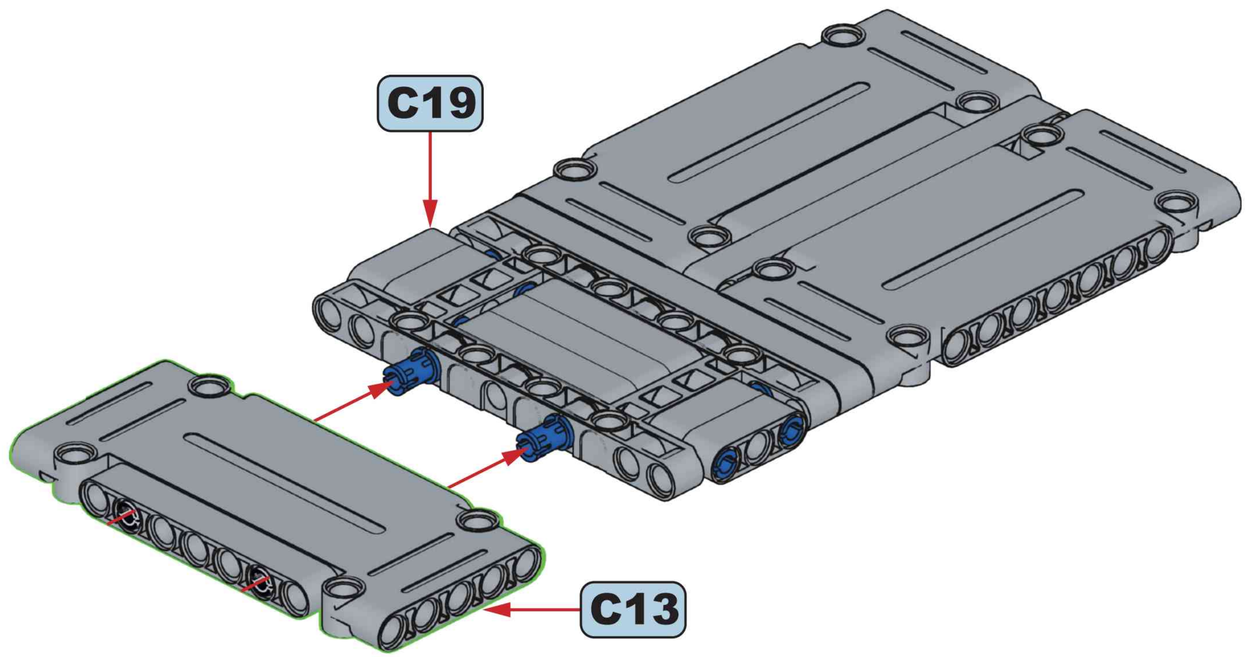

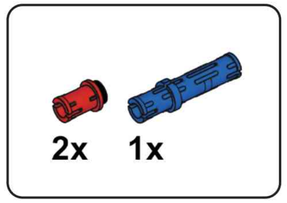

C21

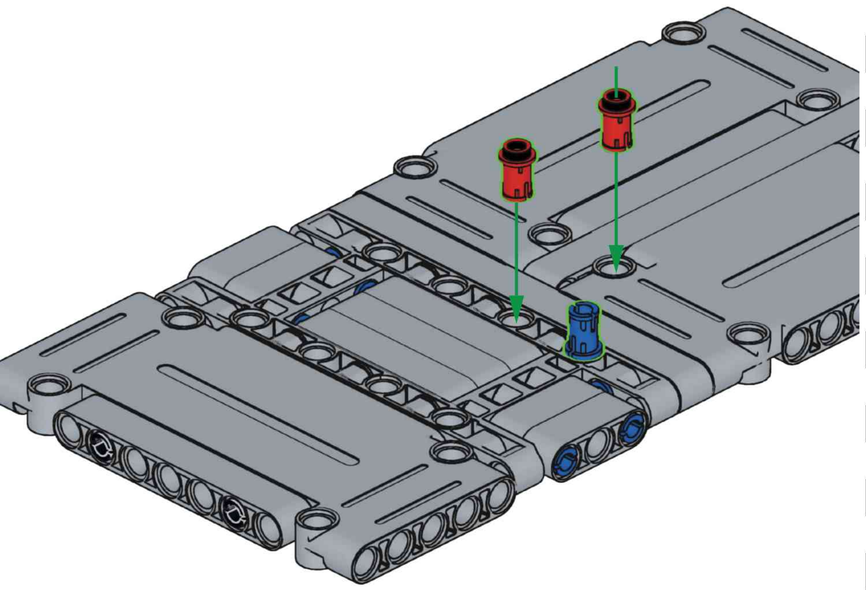

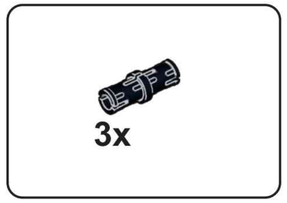

C22

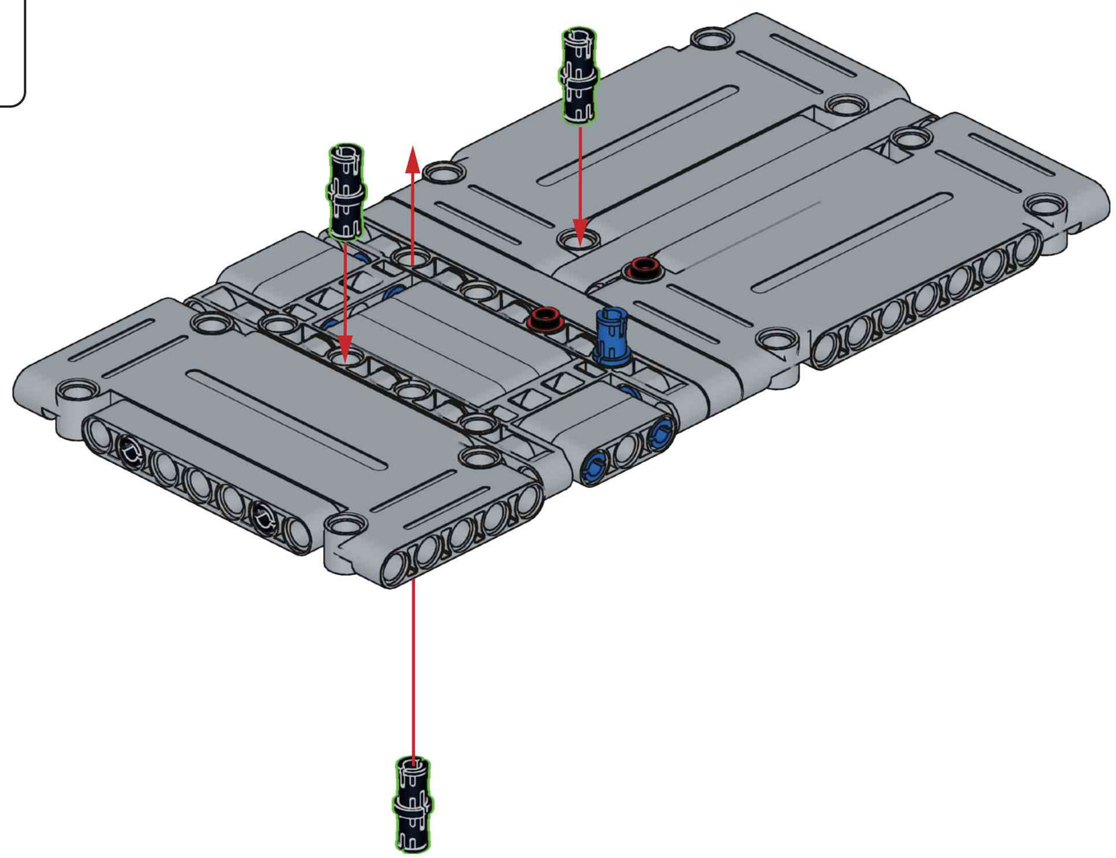

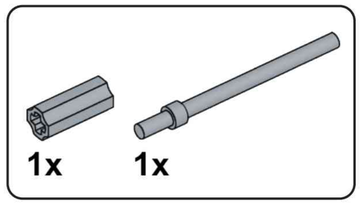

C23

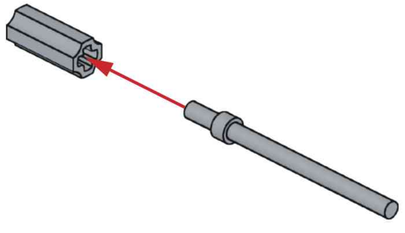

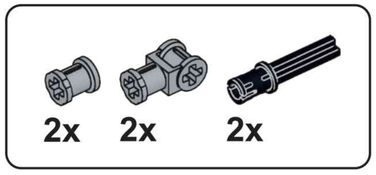

C24

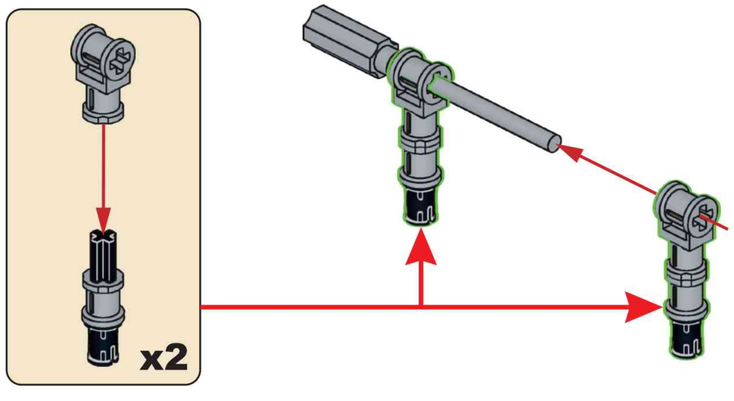

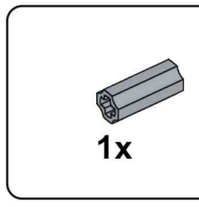

C25

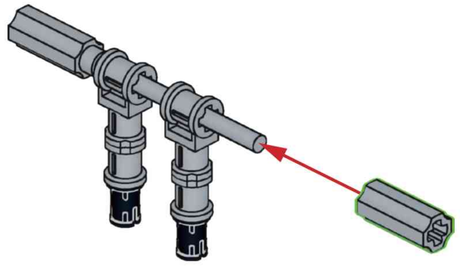

C26

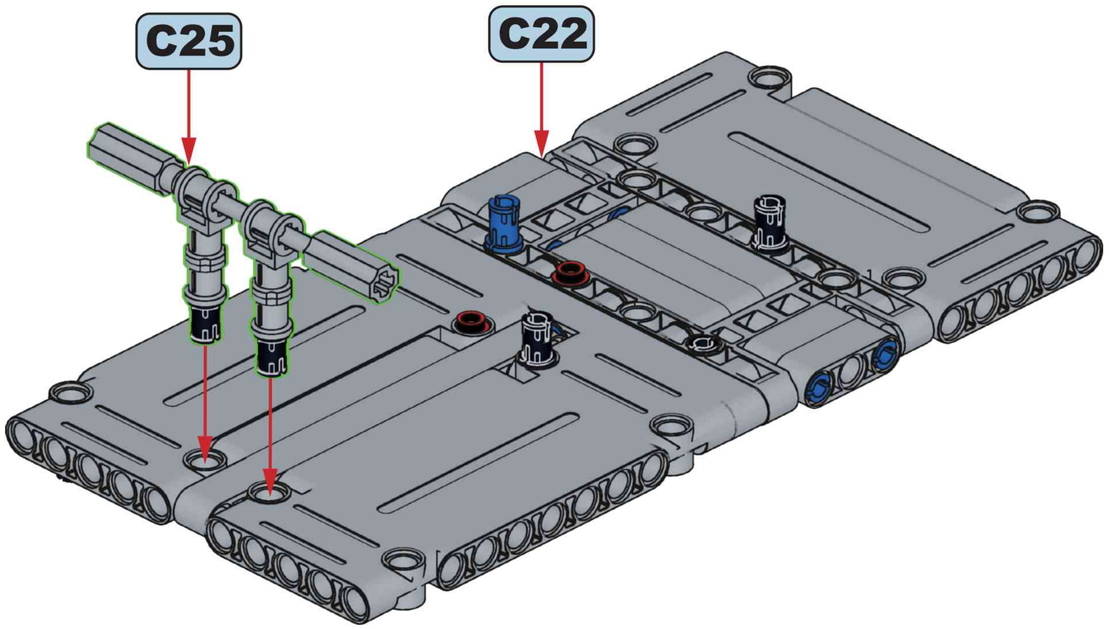

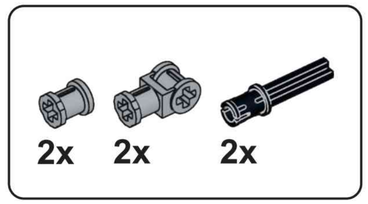

C27



x2

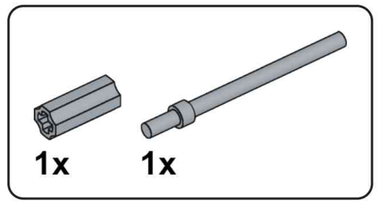

C28

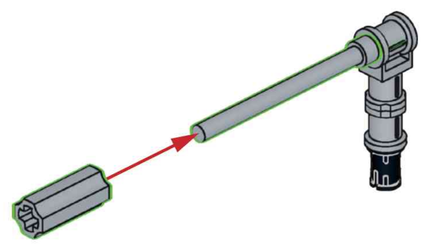

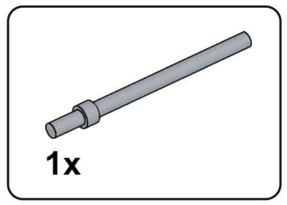

C29

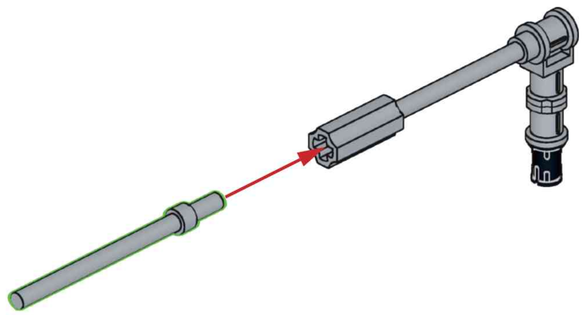

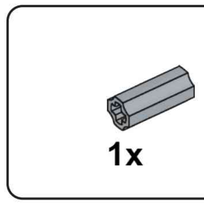

C30

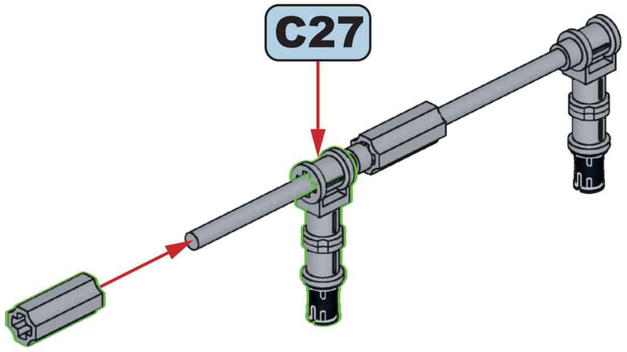

C31

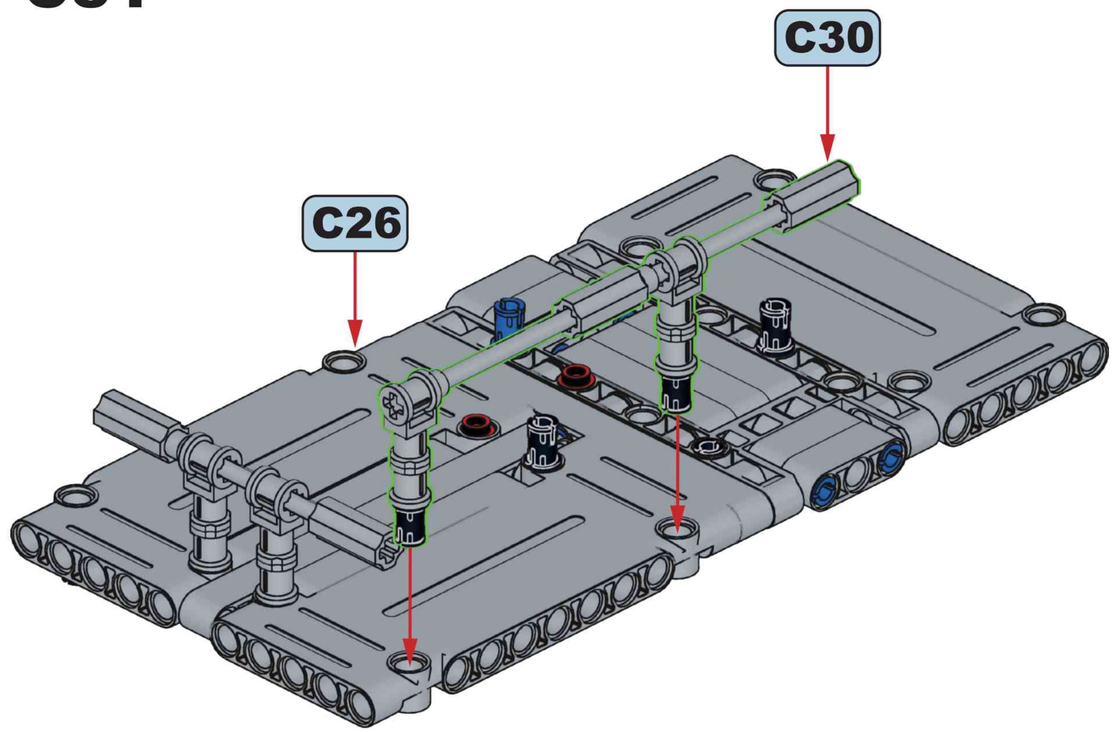

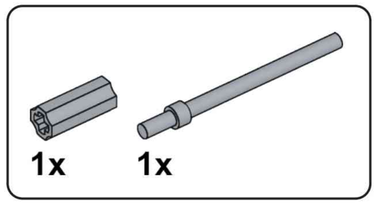

C32

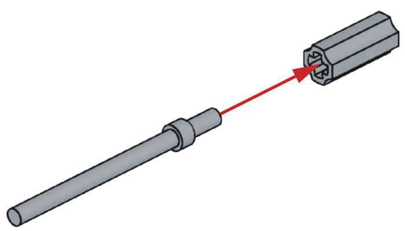

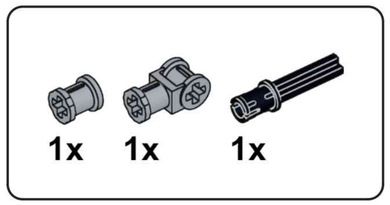

C33

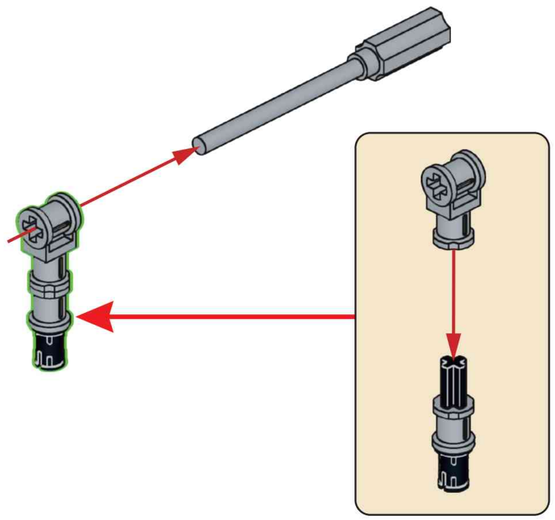

C34

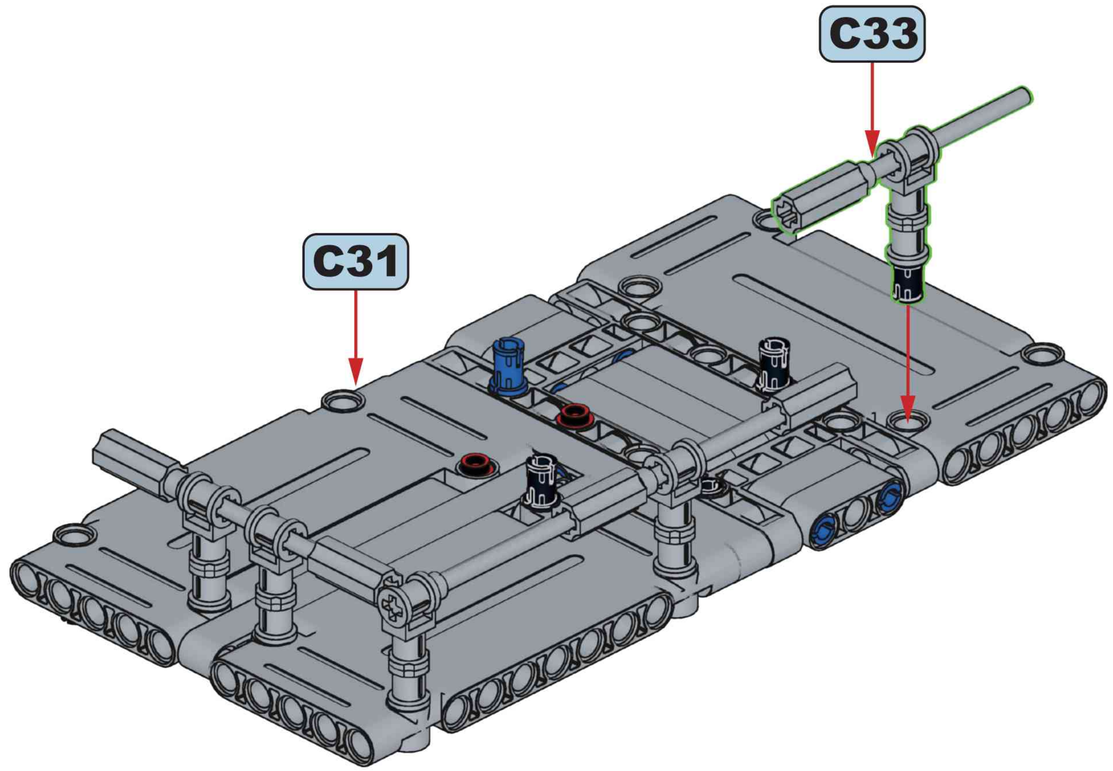

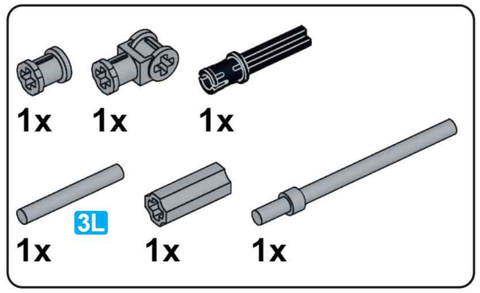

C35

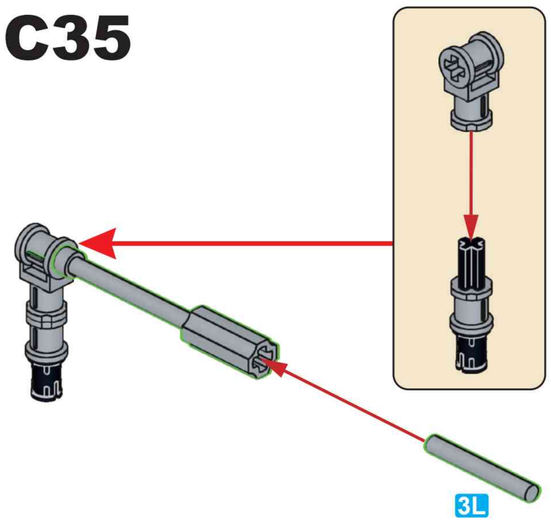

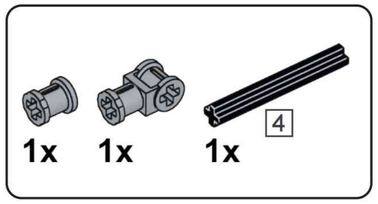

C36

C37

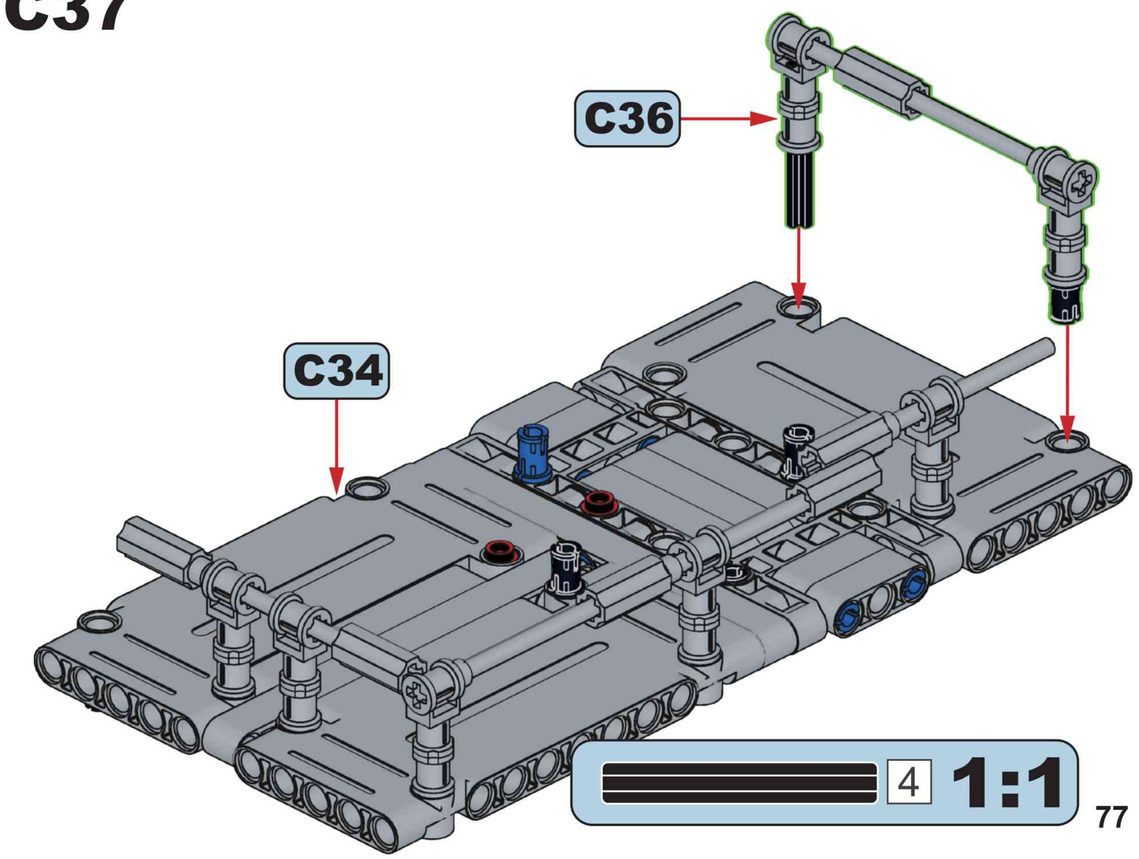

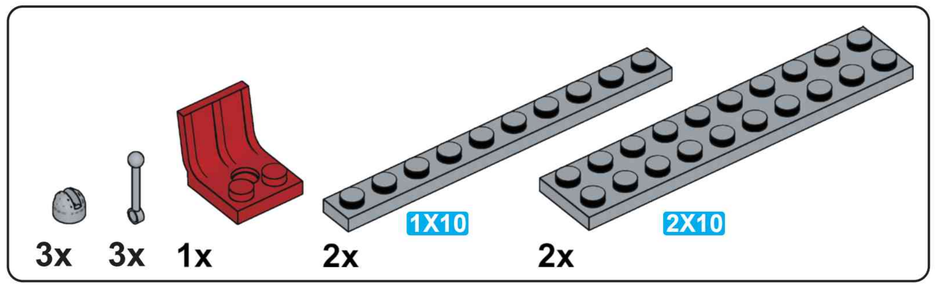

C38

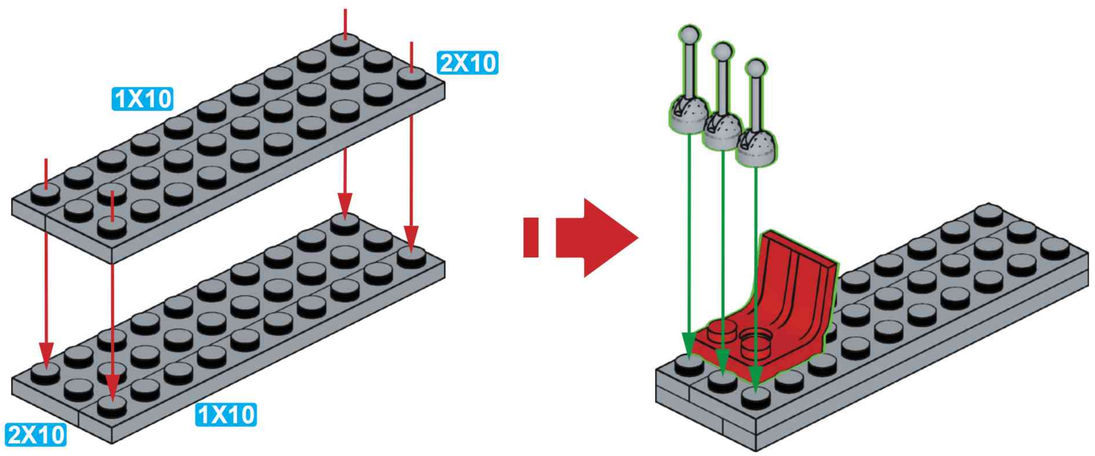

C39

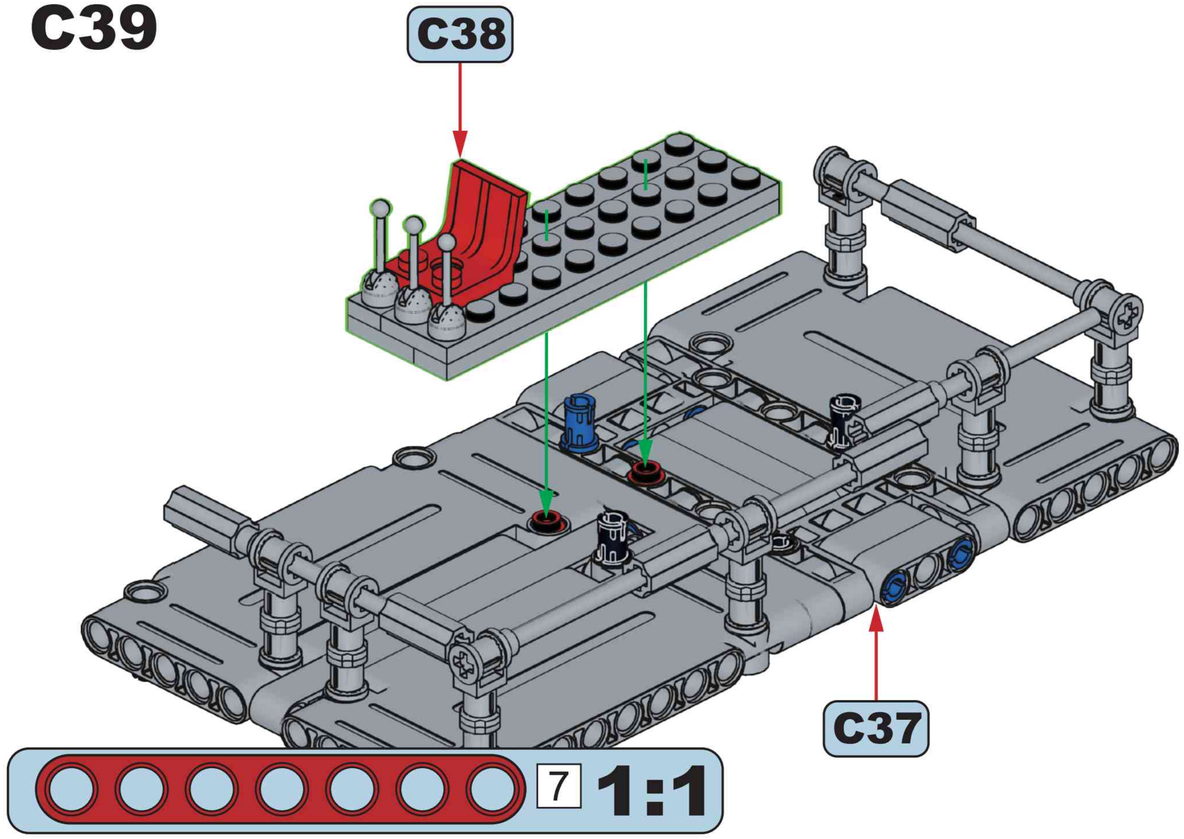

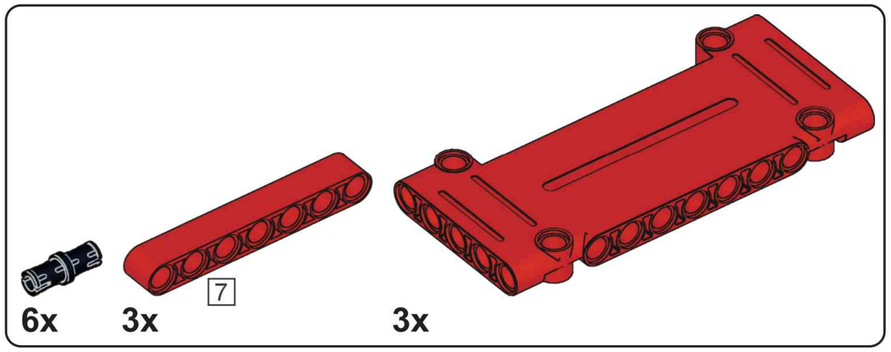

C40

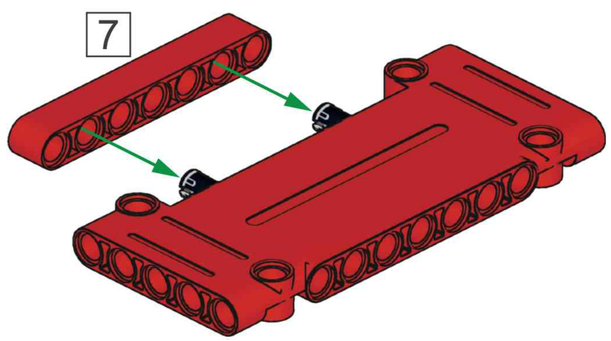

x3

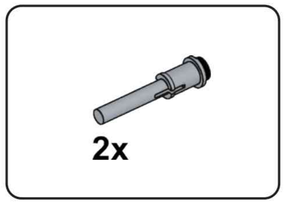

C41

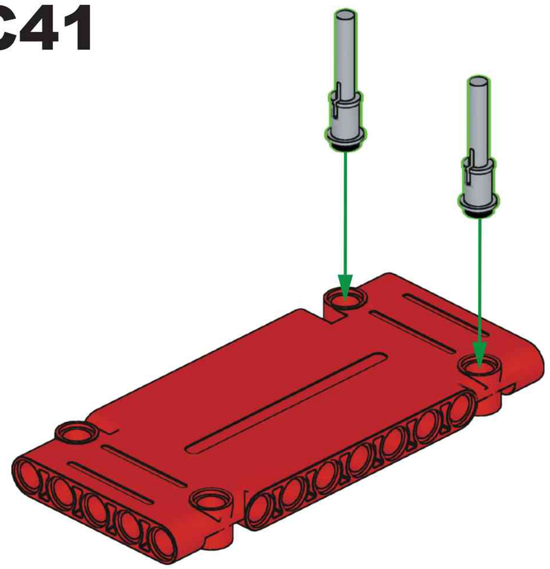

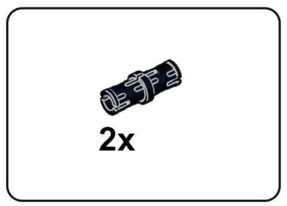

C42

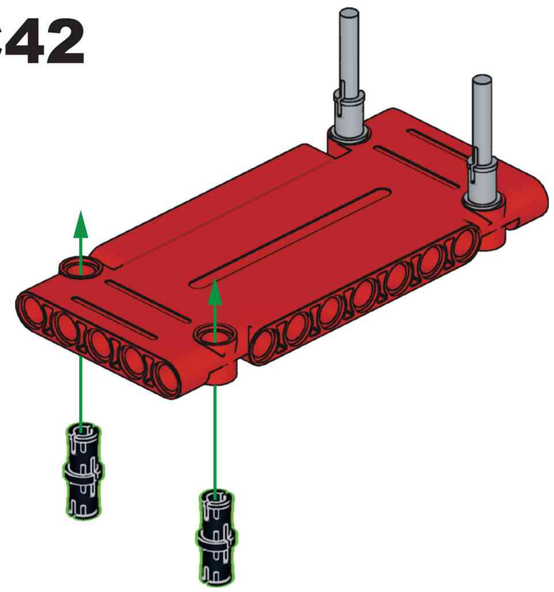

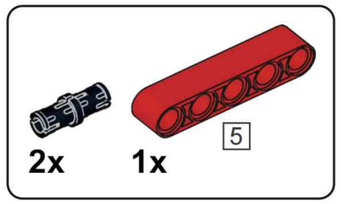

C43

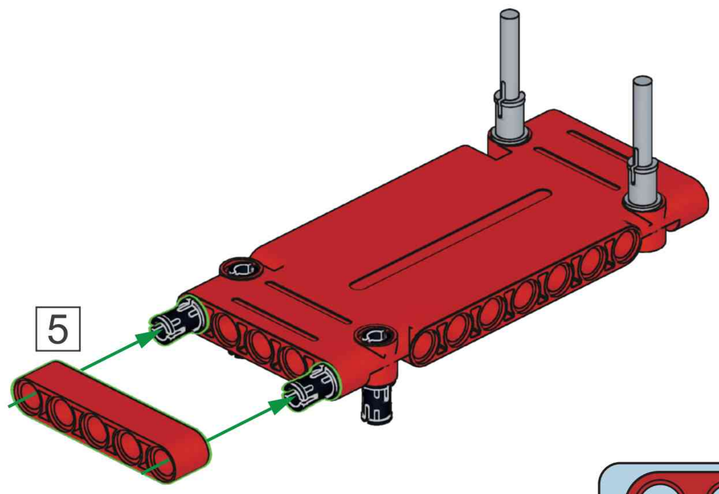

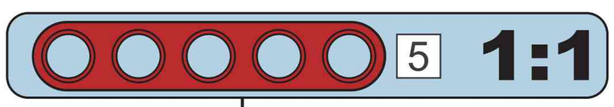

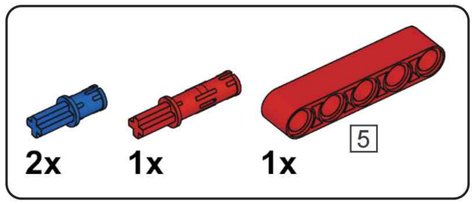

C44

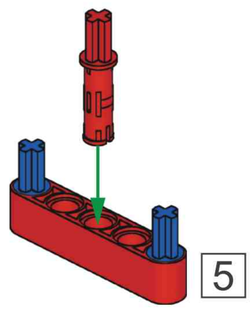

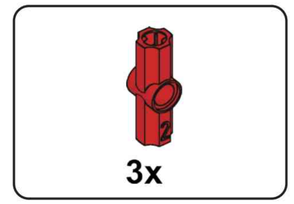

C45

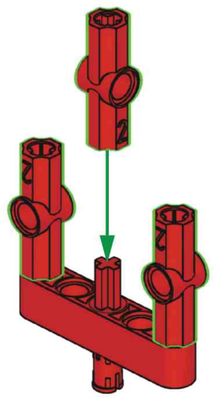

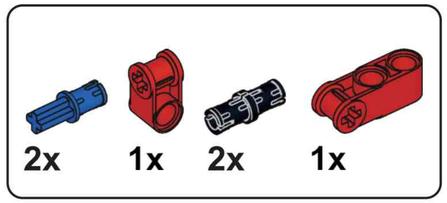

C46

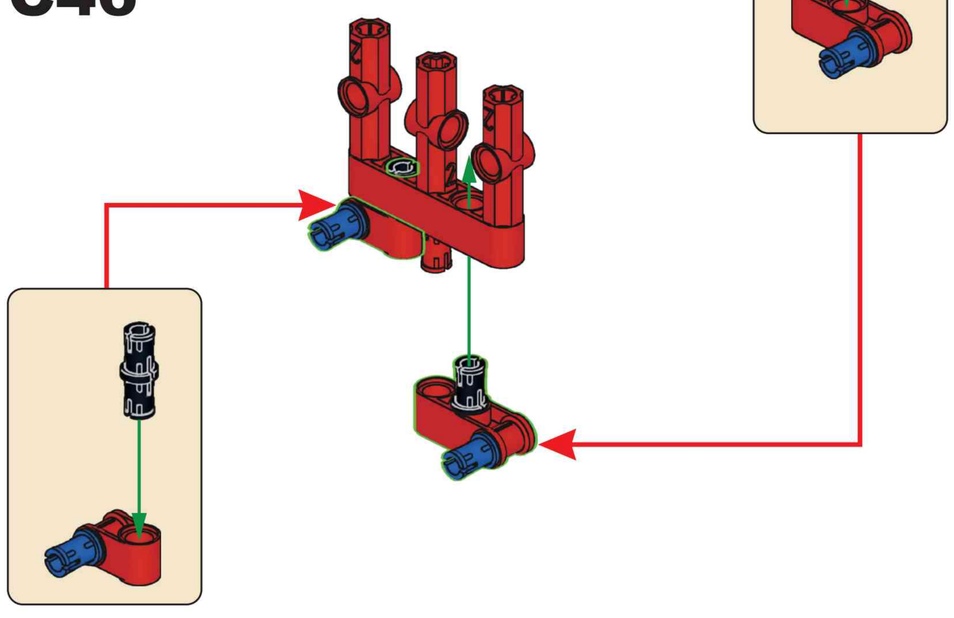

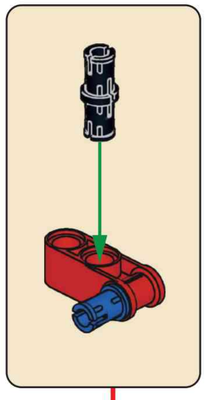

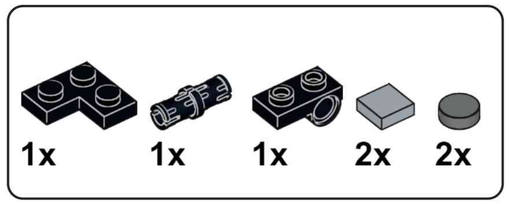

C47

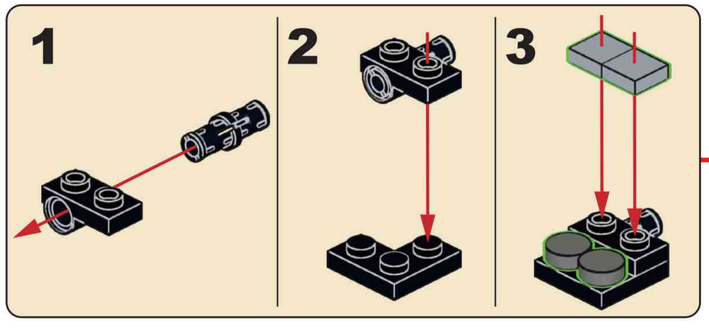

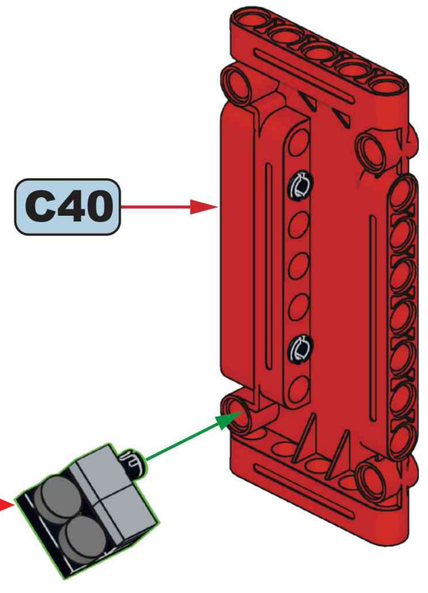

C48

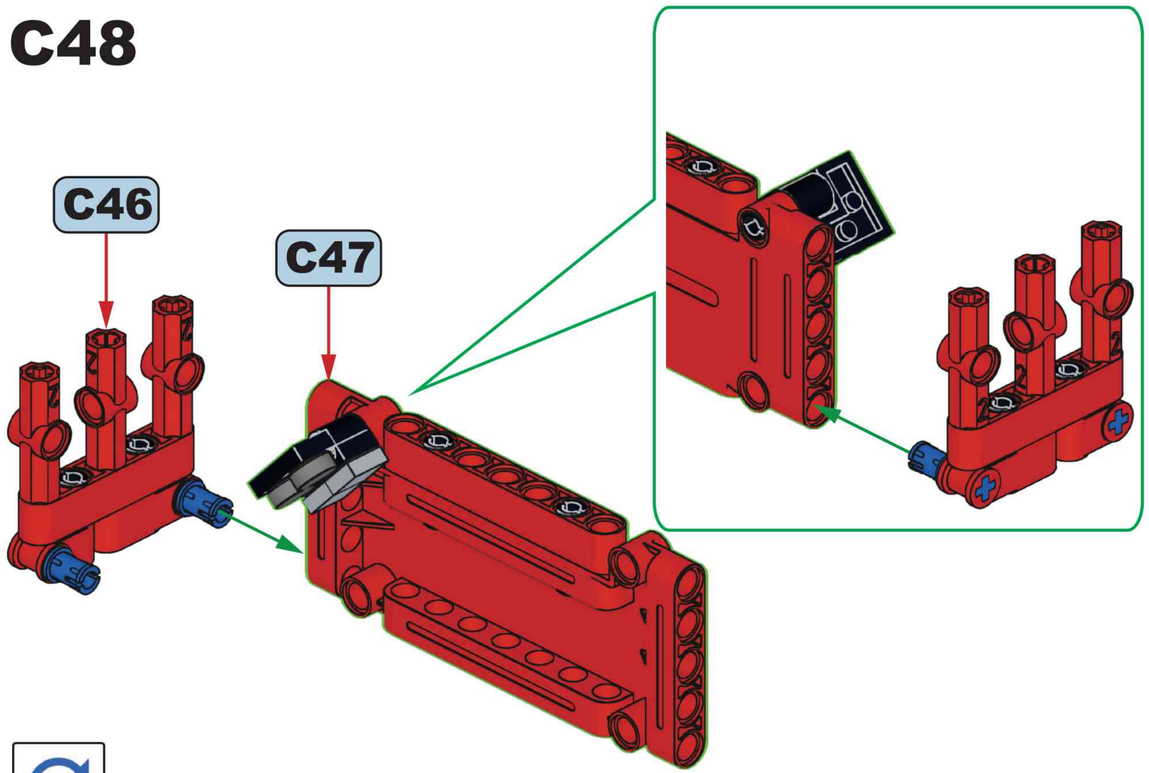

C49

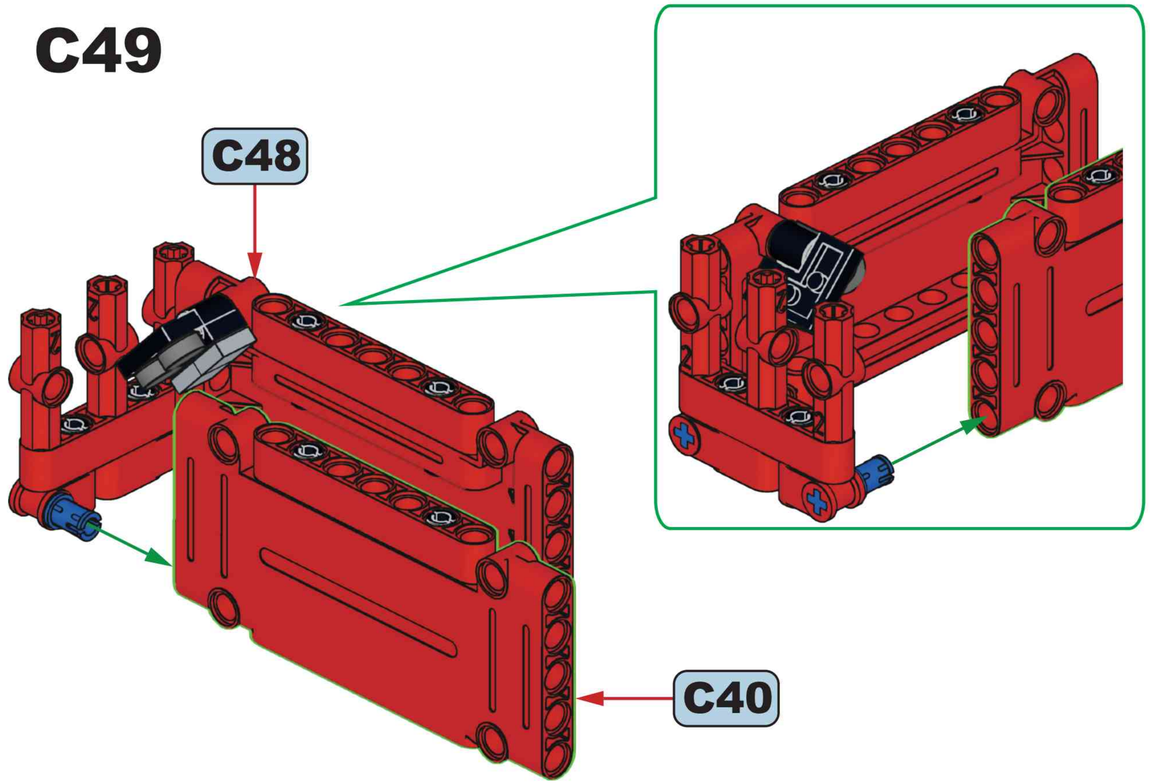

C50

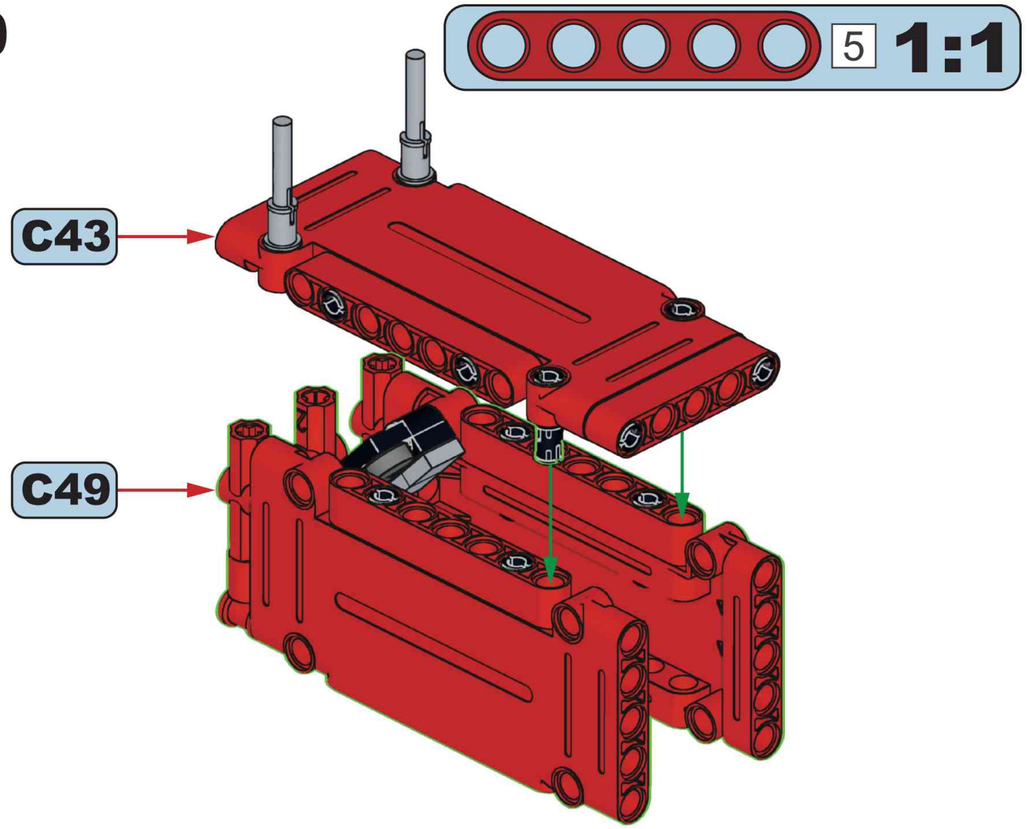

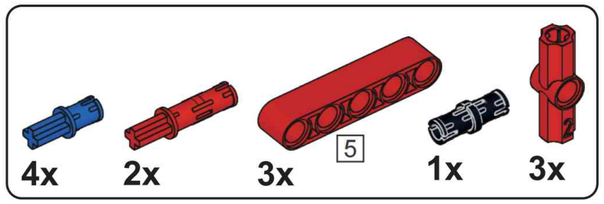

C51

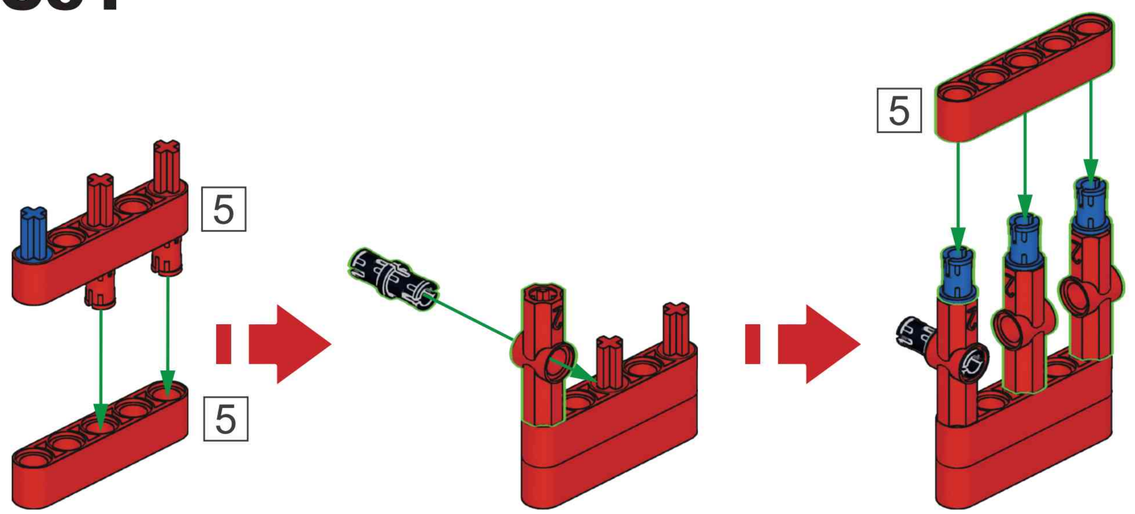

C52

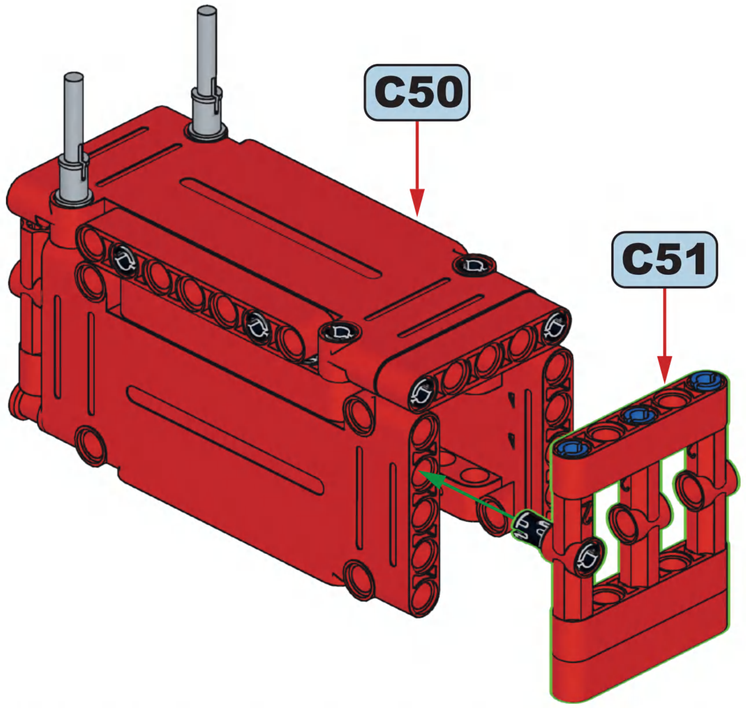

C53

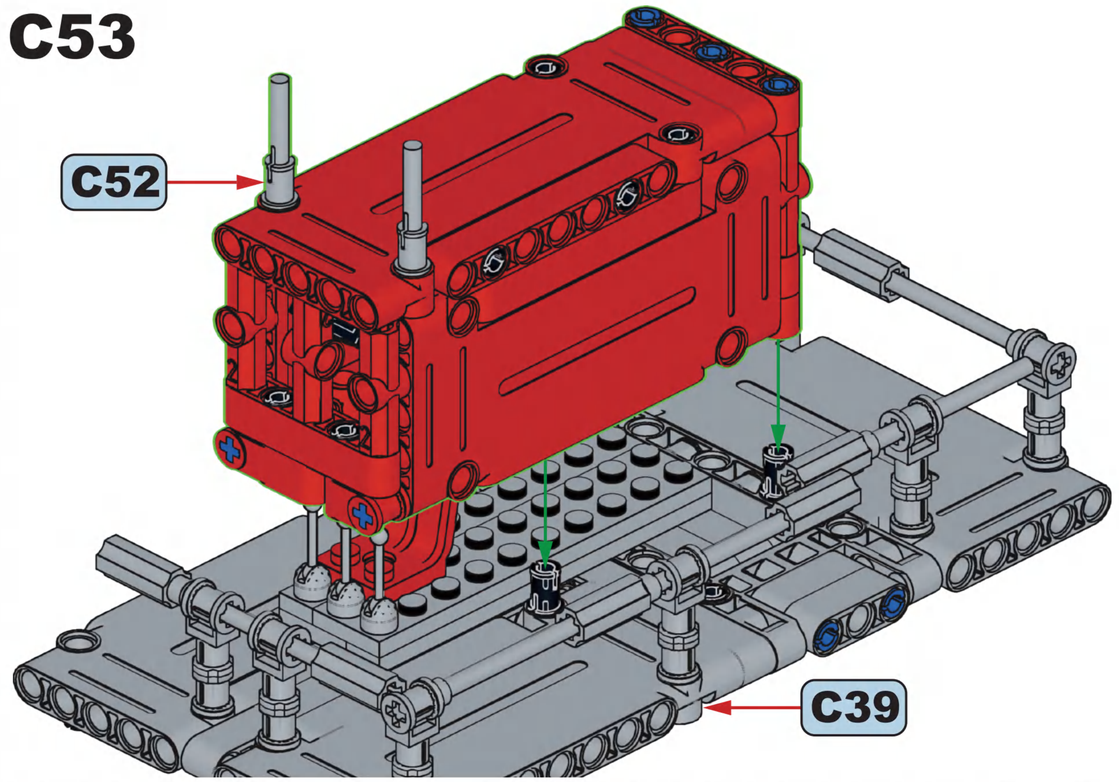

C54

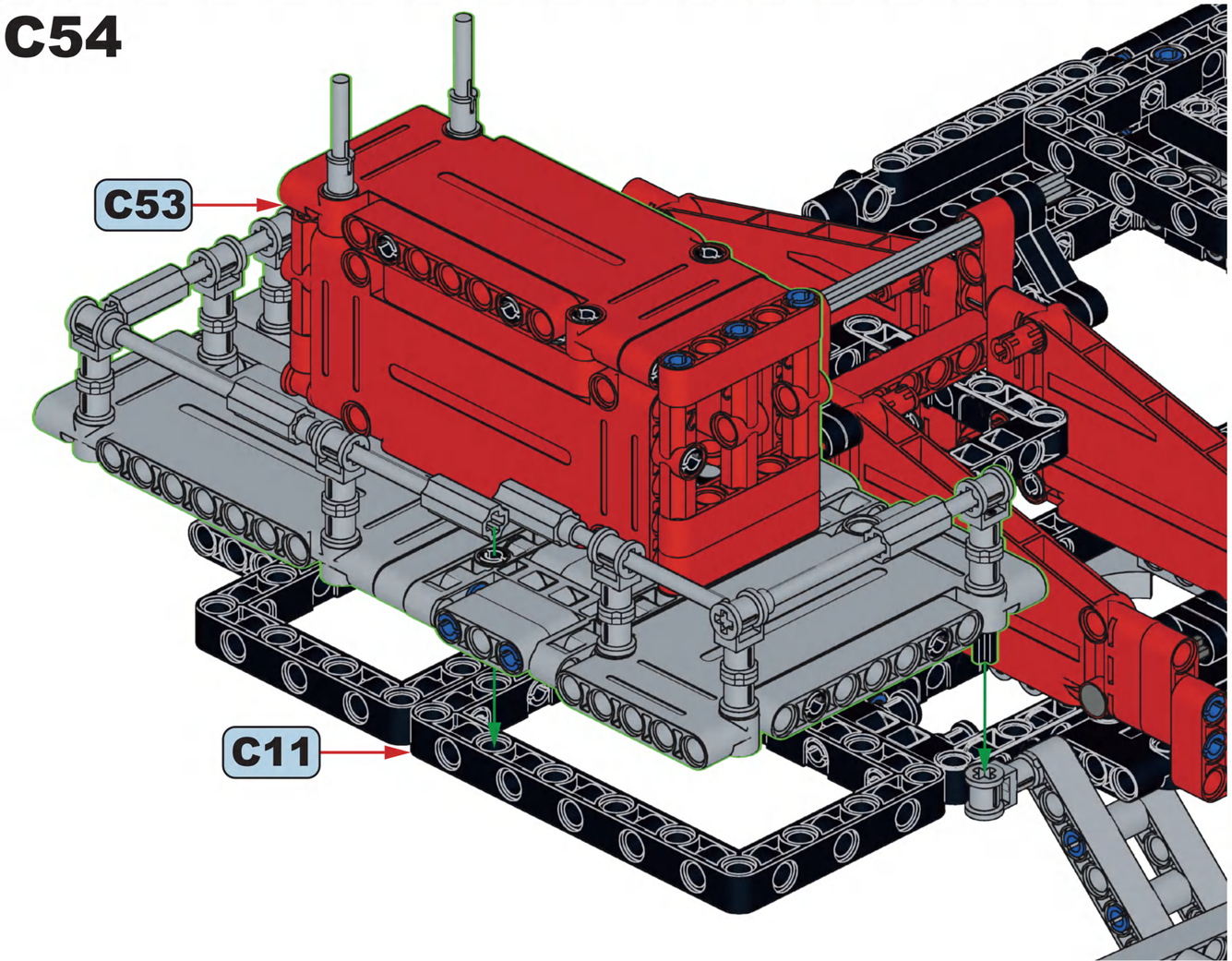

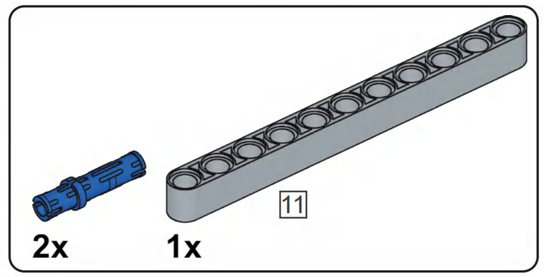

C55

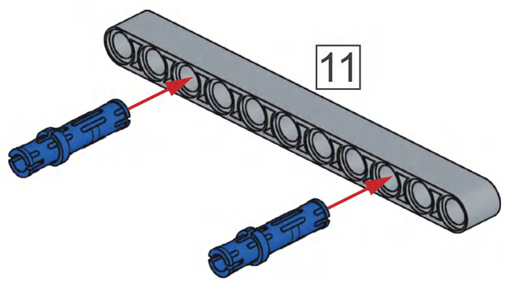

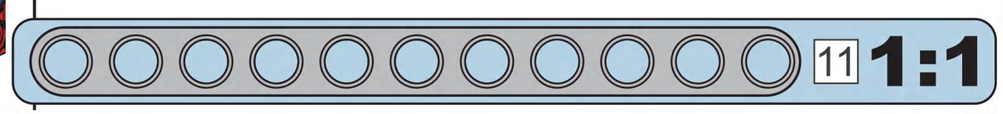

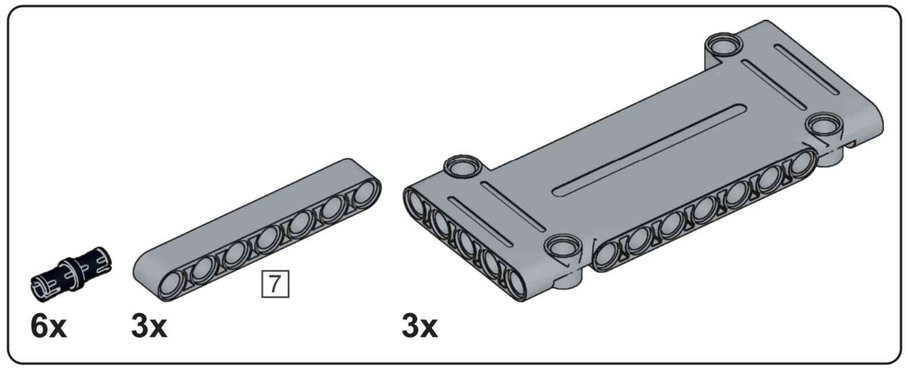

C56

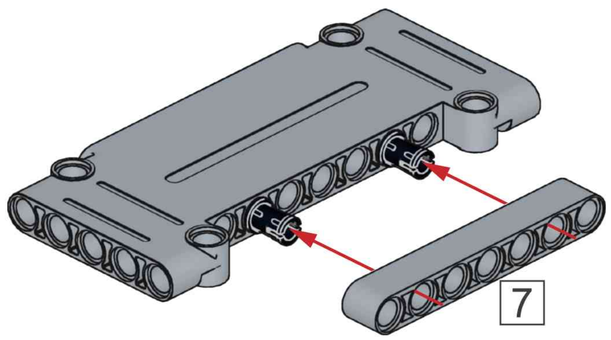

x3

C57

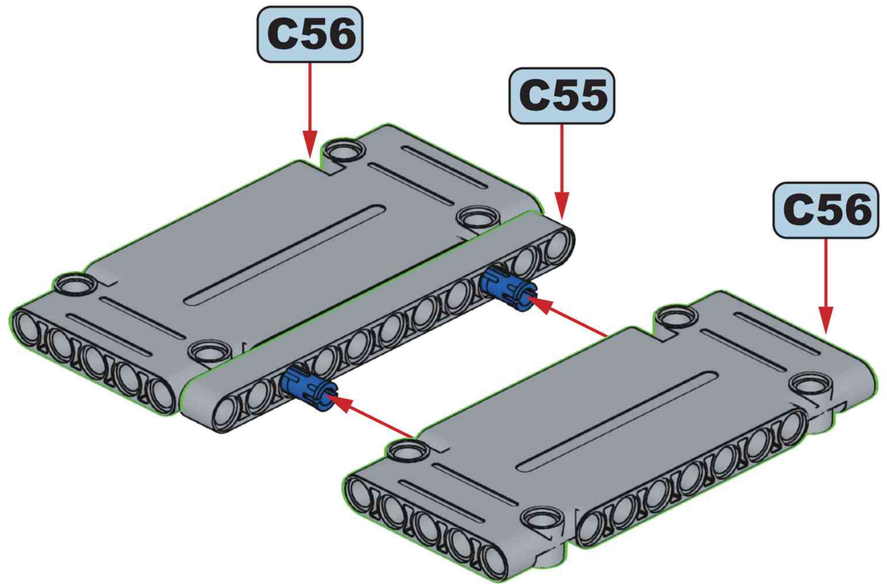

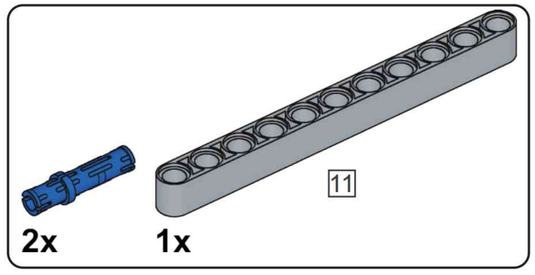

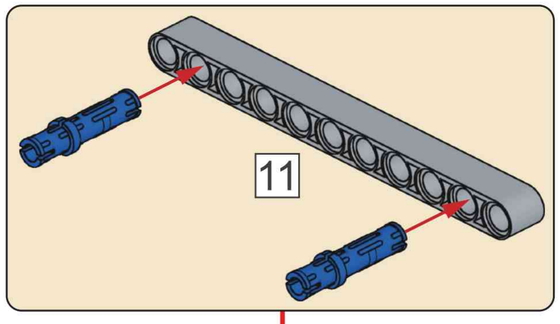

C58

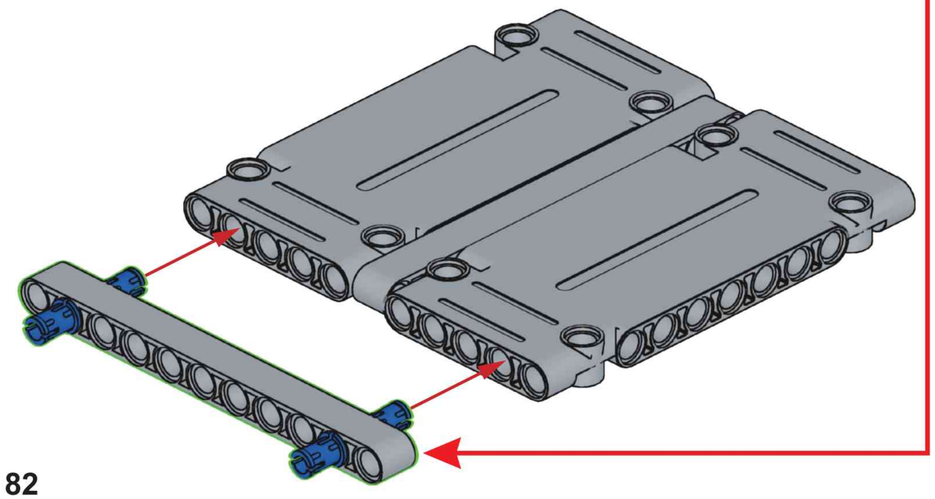

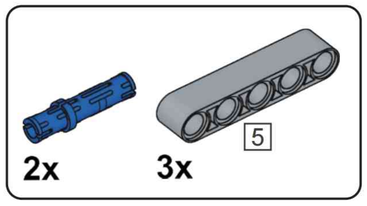

C59

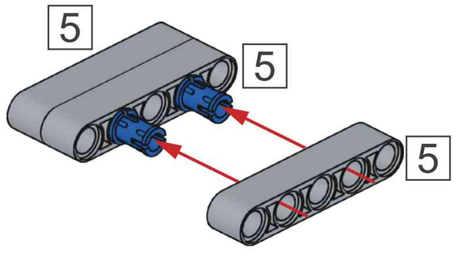

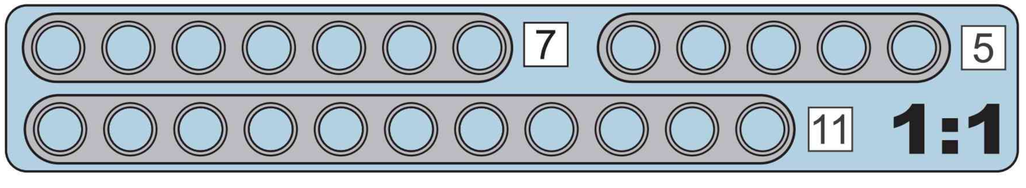

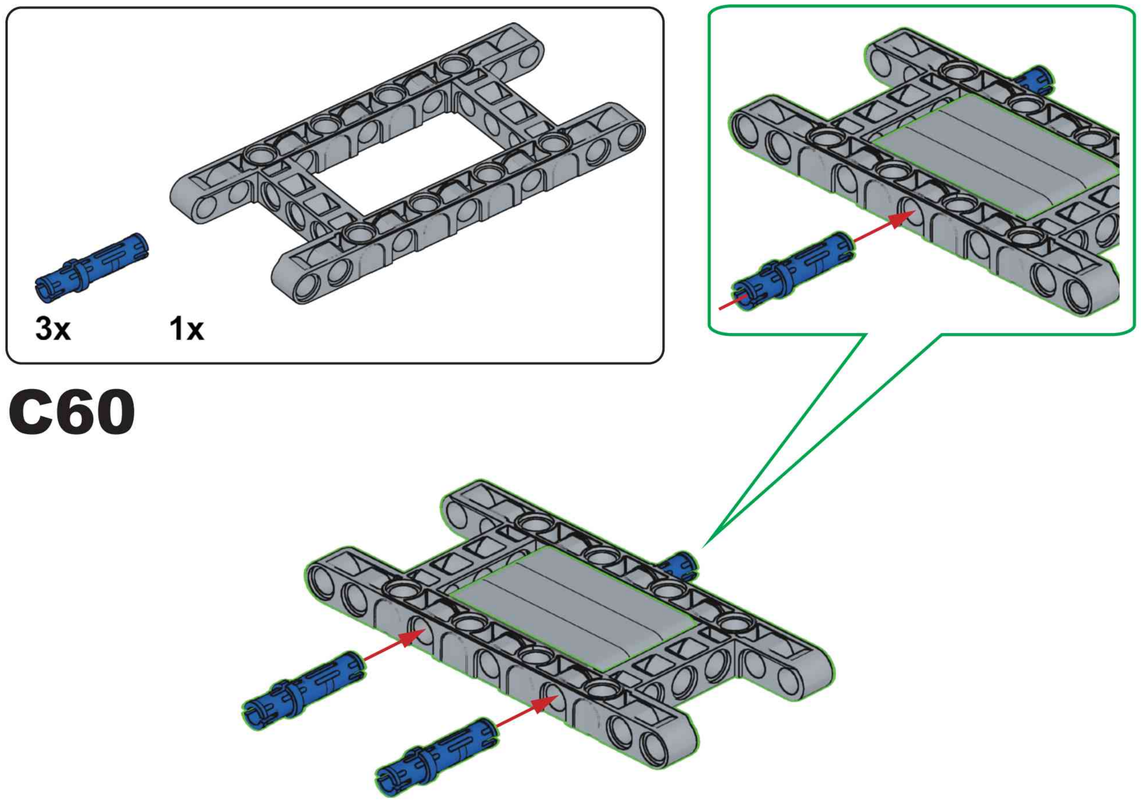

C60

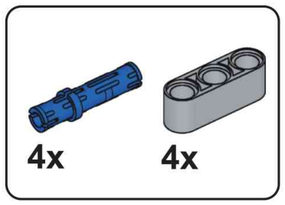

C61

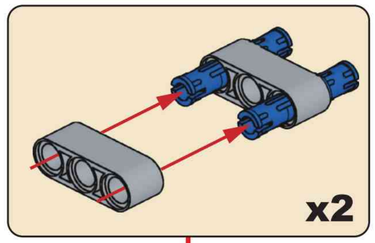

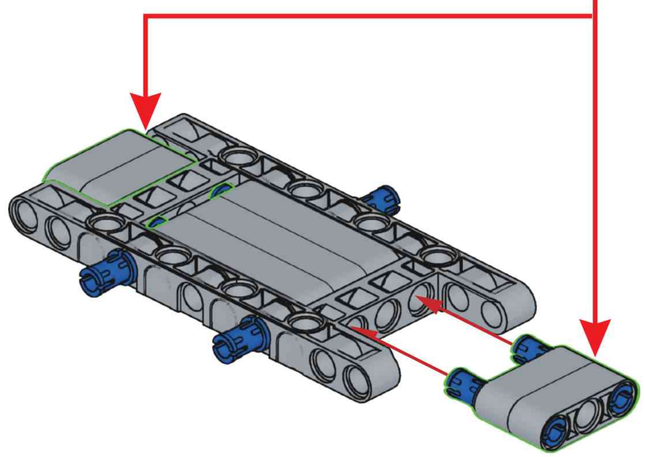

C62

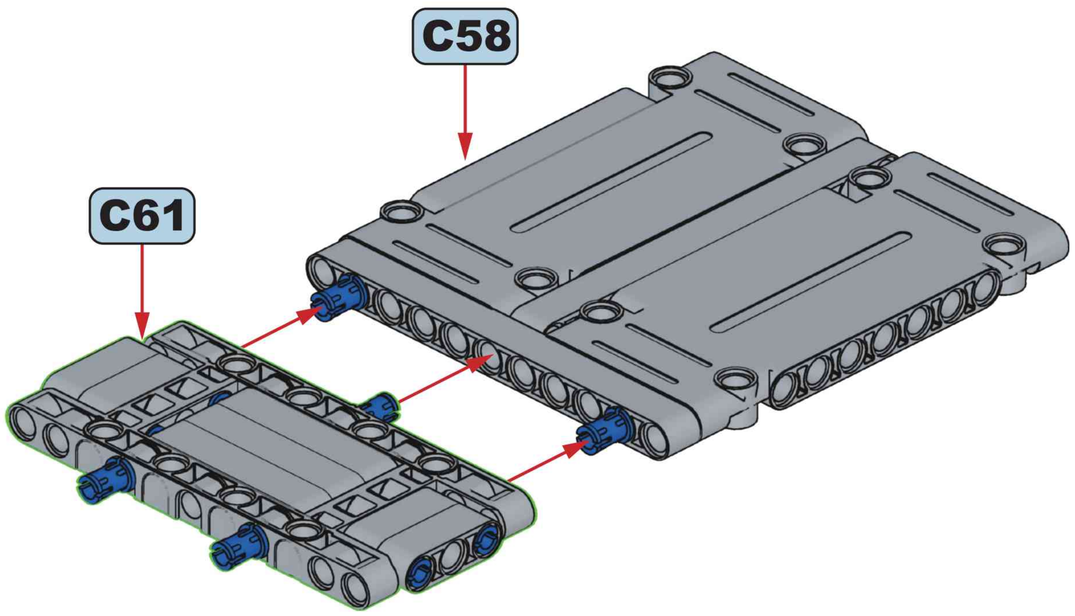

C63

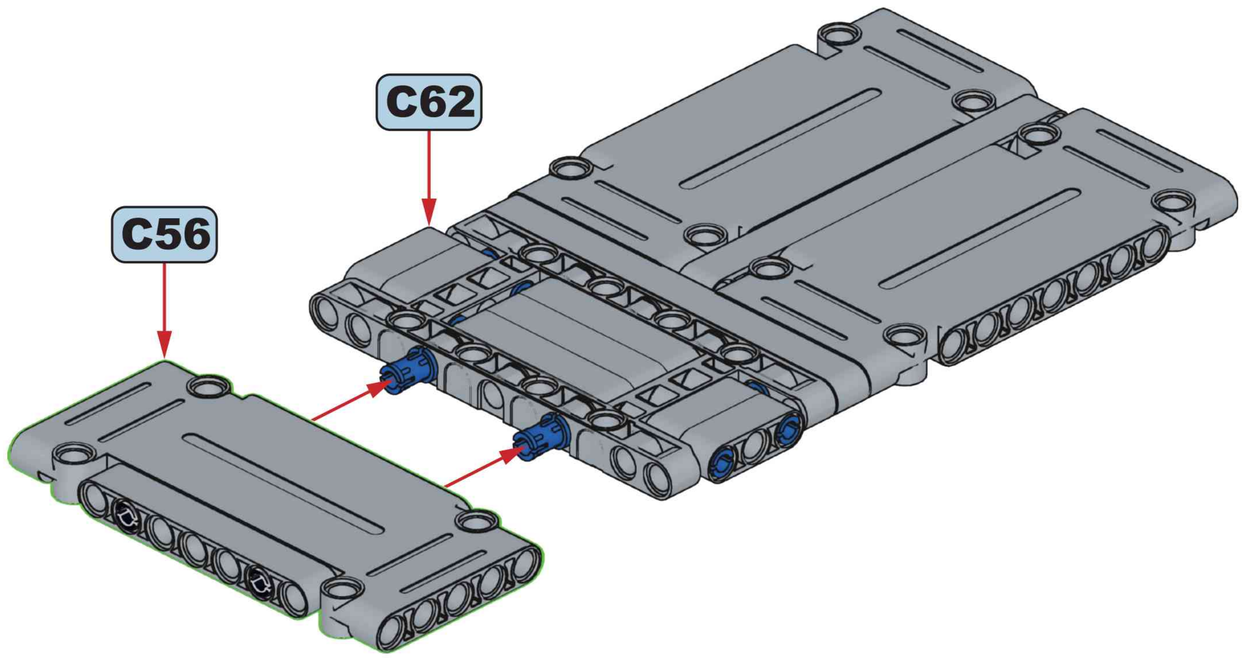

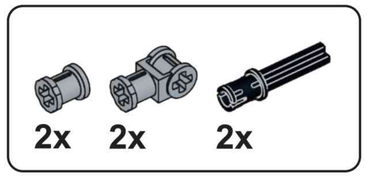

C64



x2

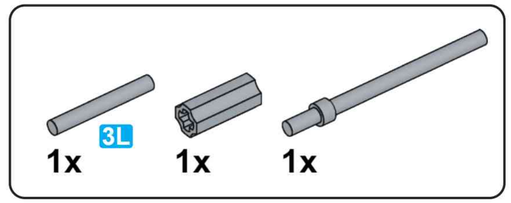

C65

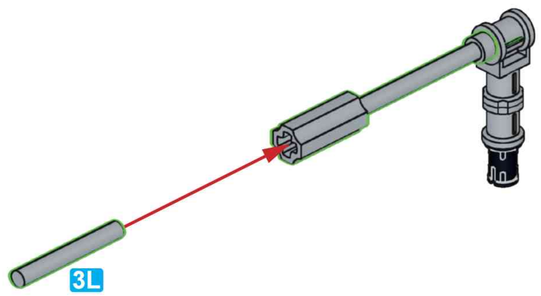

C66

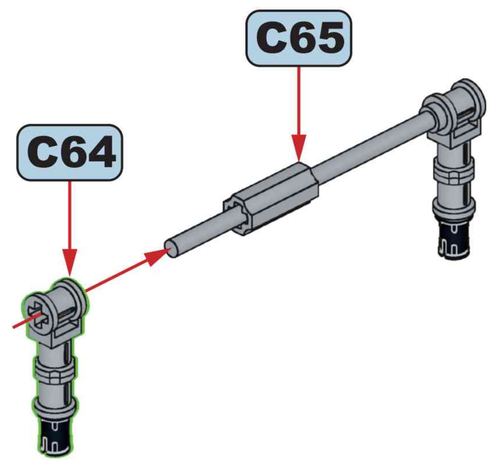

C67

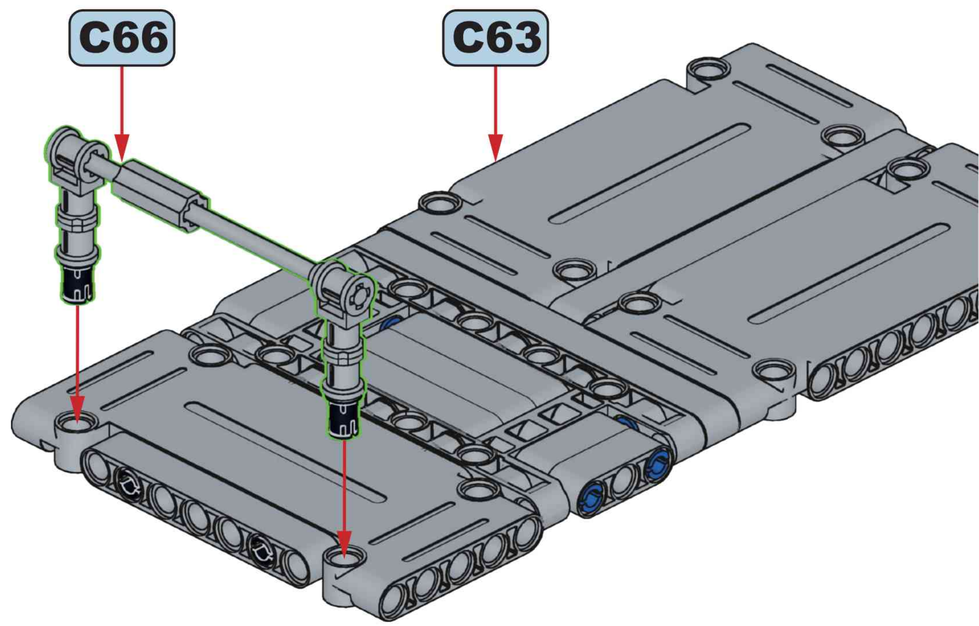

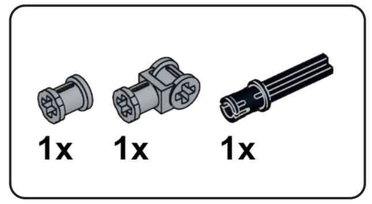

C68



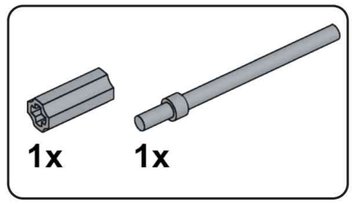

C69

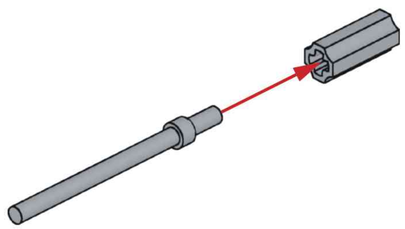

C70

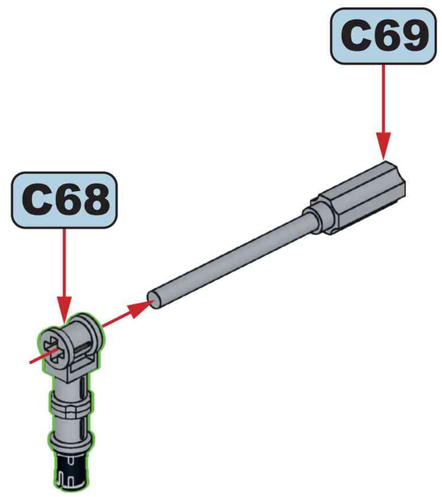

C71

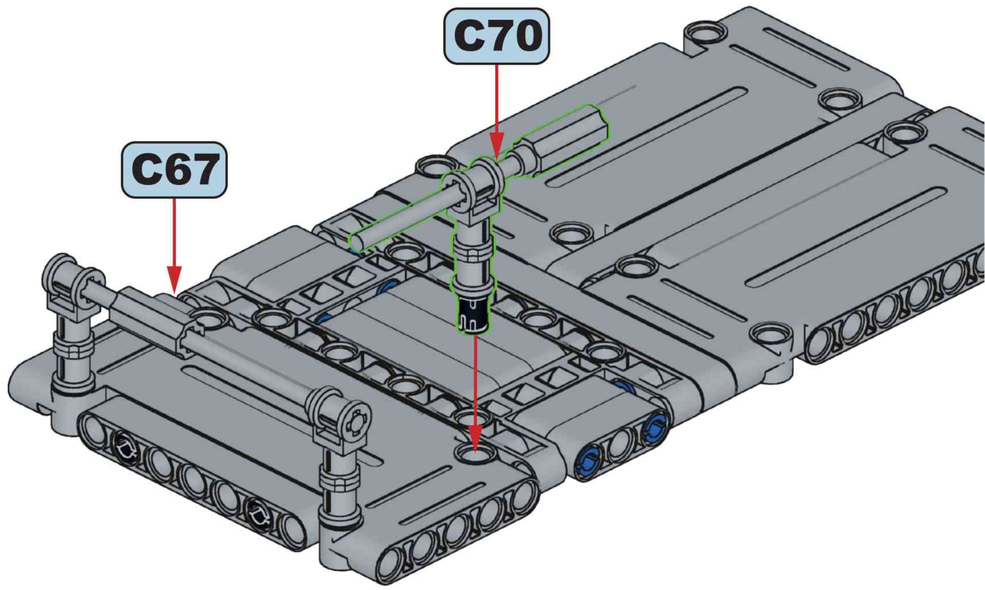

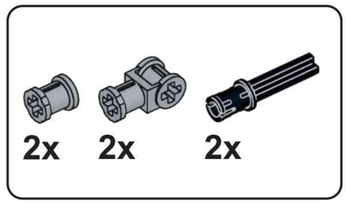

C72



x2

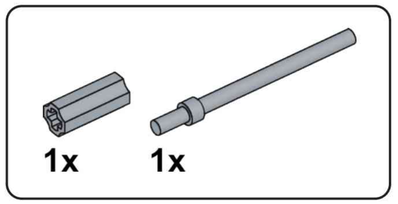

C73

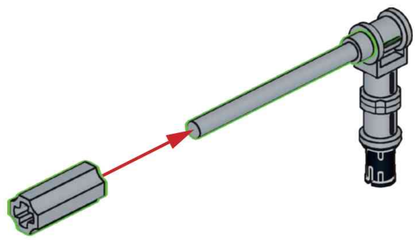

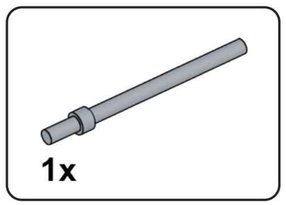

C74

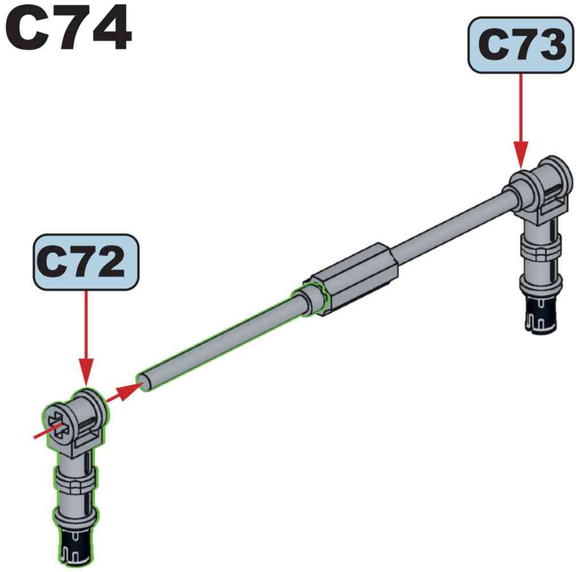

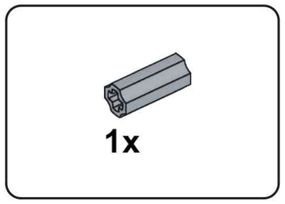

C75

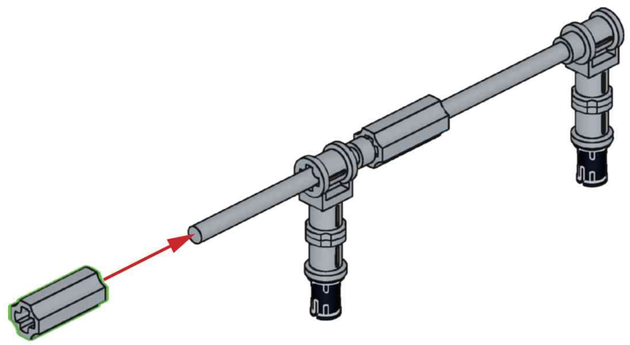

C76

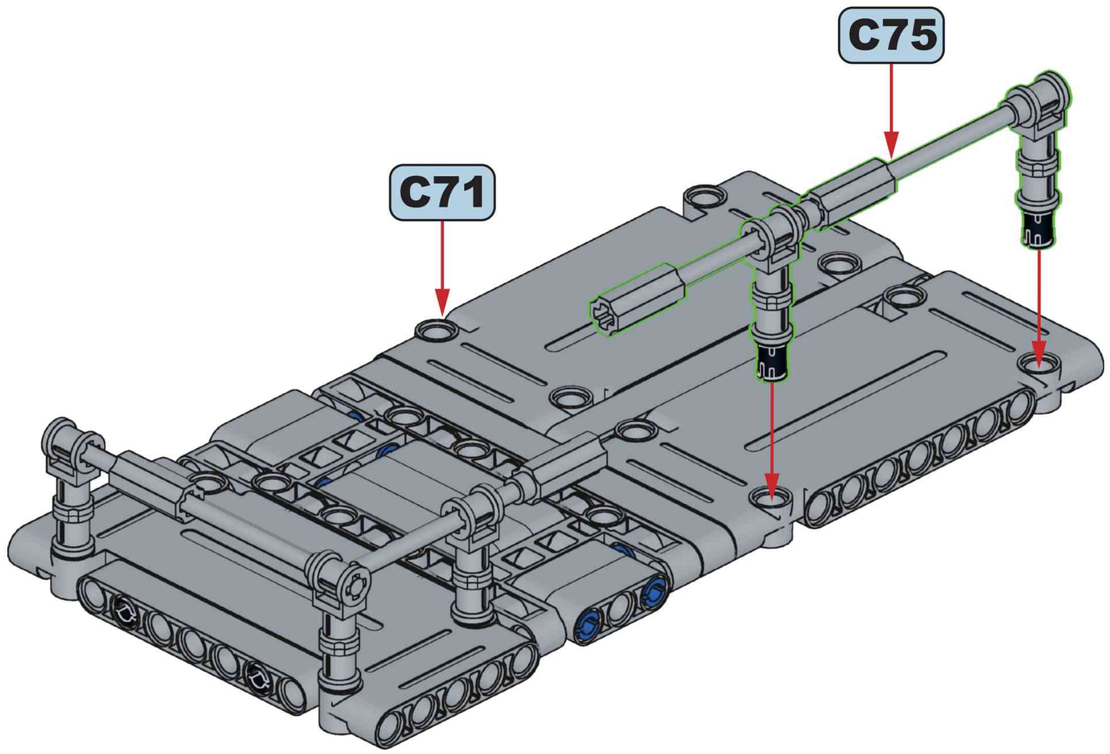

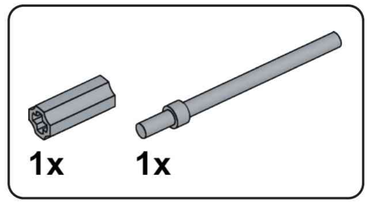

C77

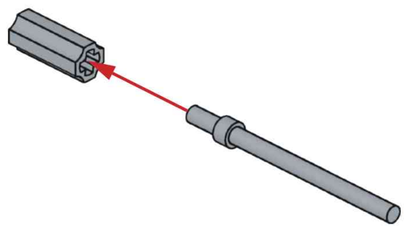

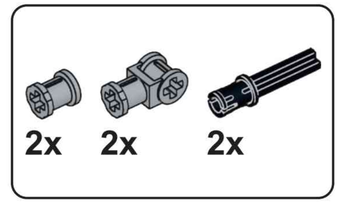

C78

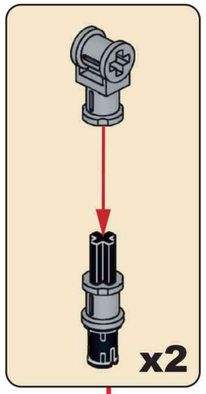

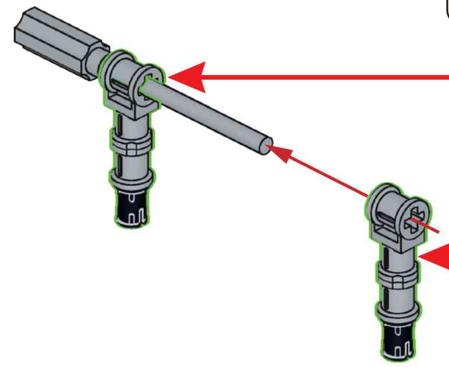

1x

C79

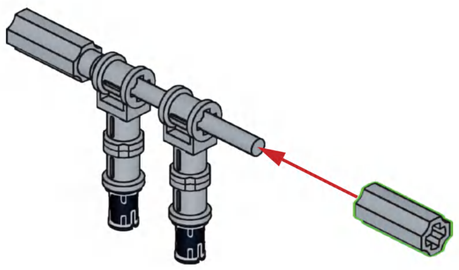

C80

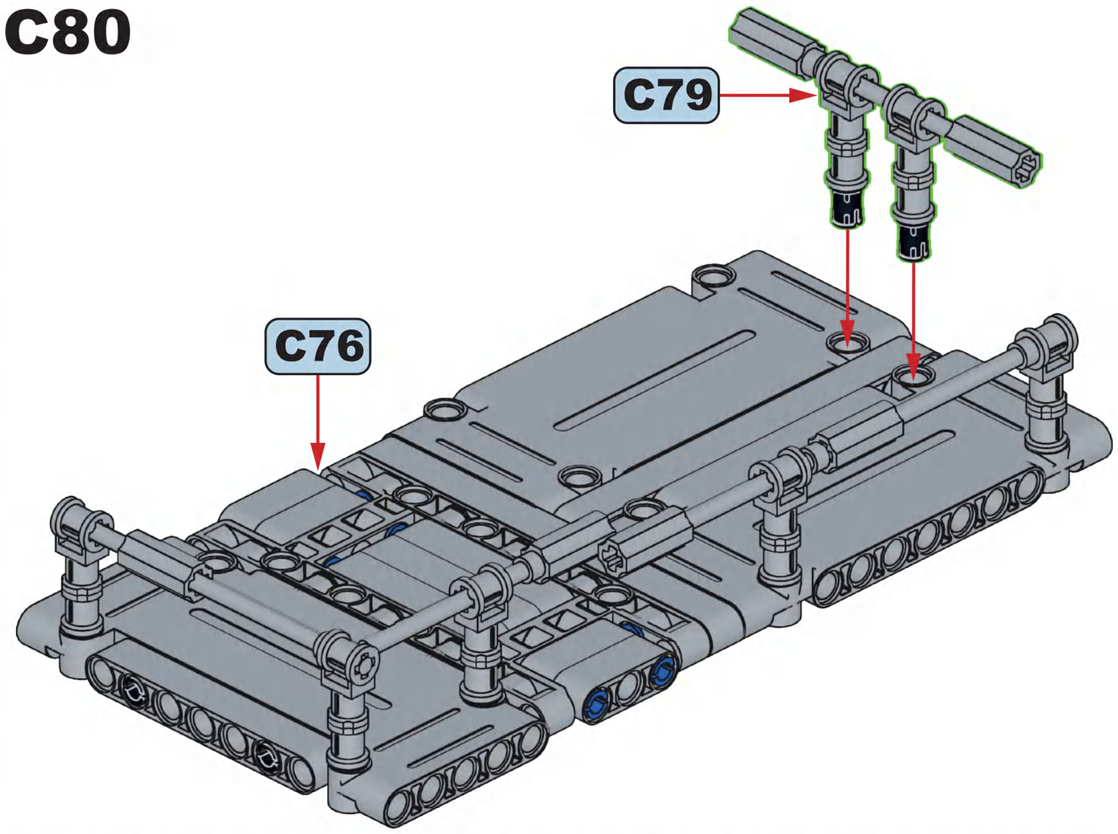

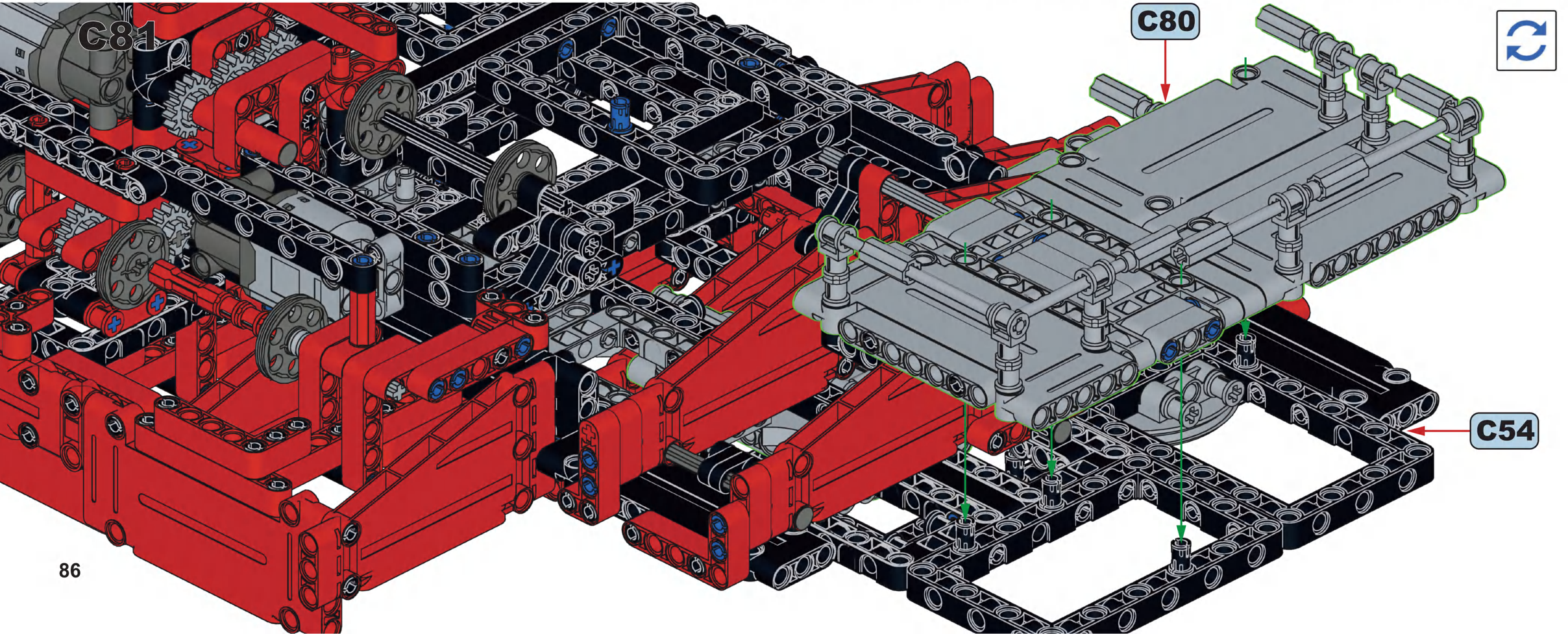

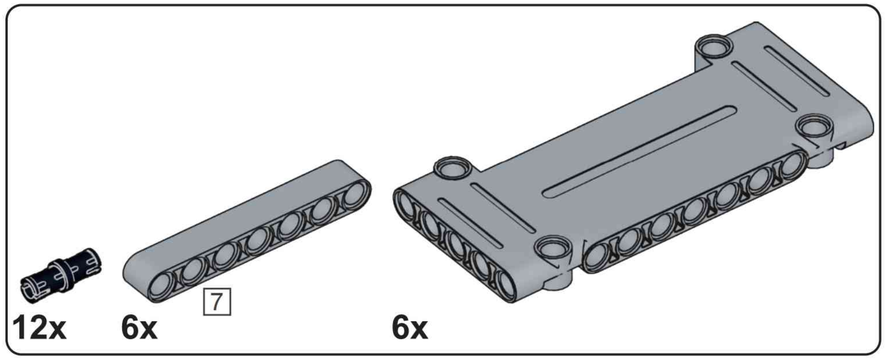

C82

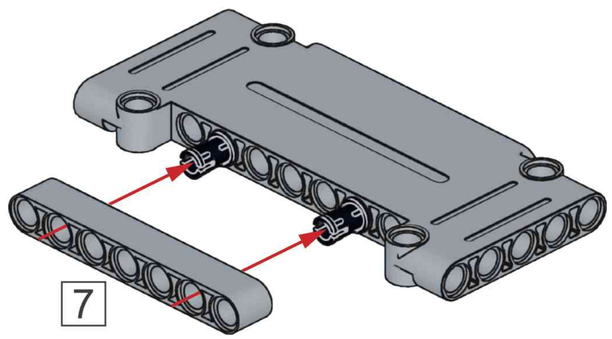

x6

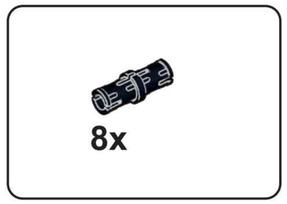

C83

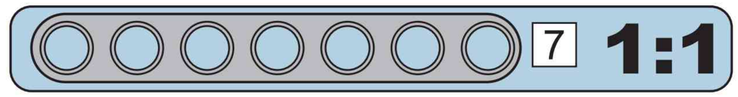

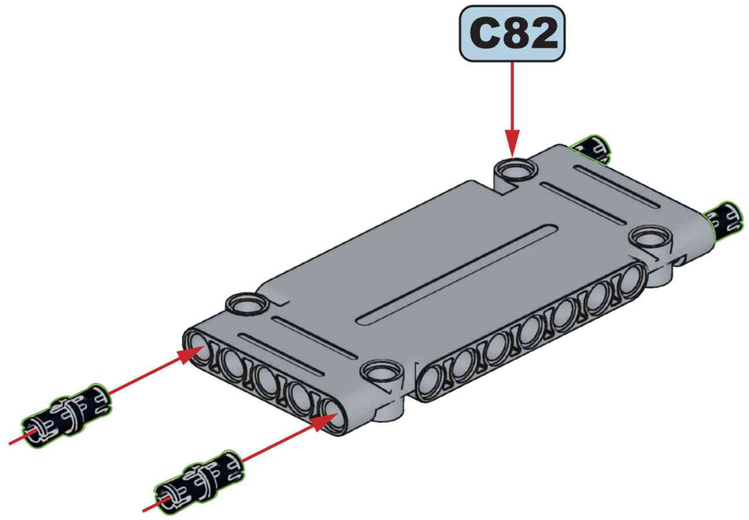

x2

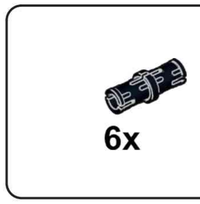

C84

C85

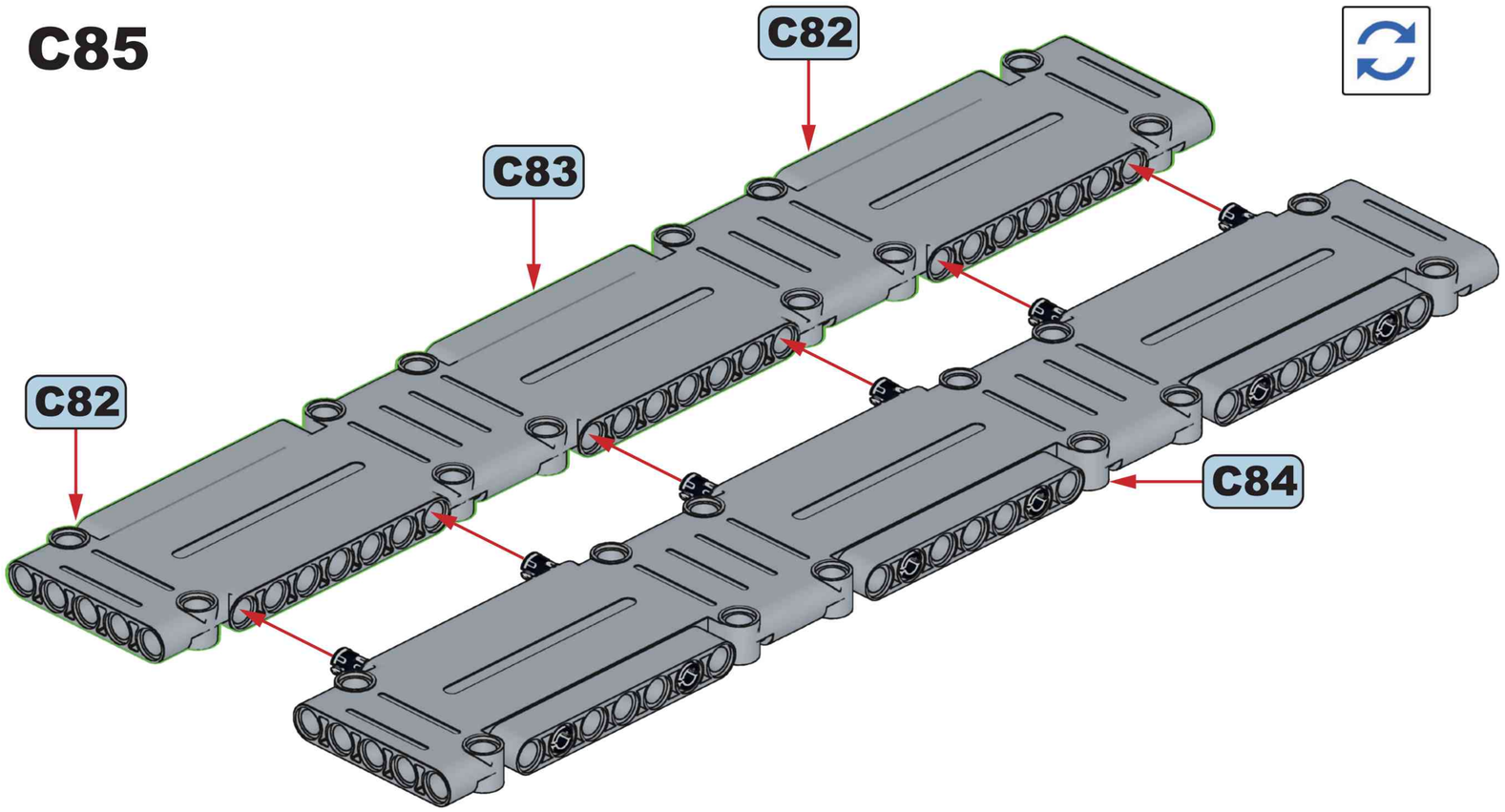

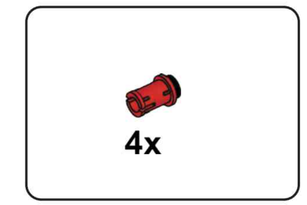

C86

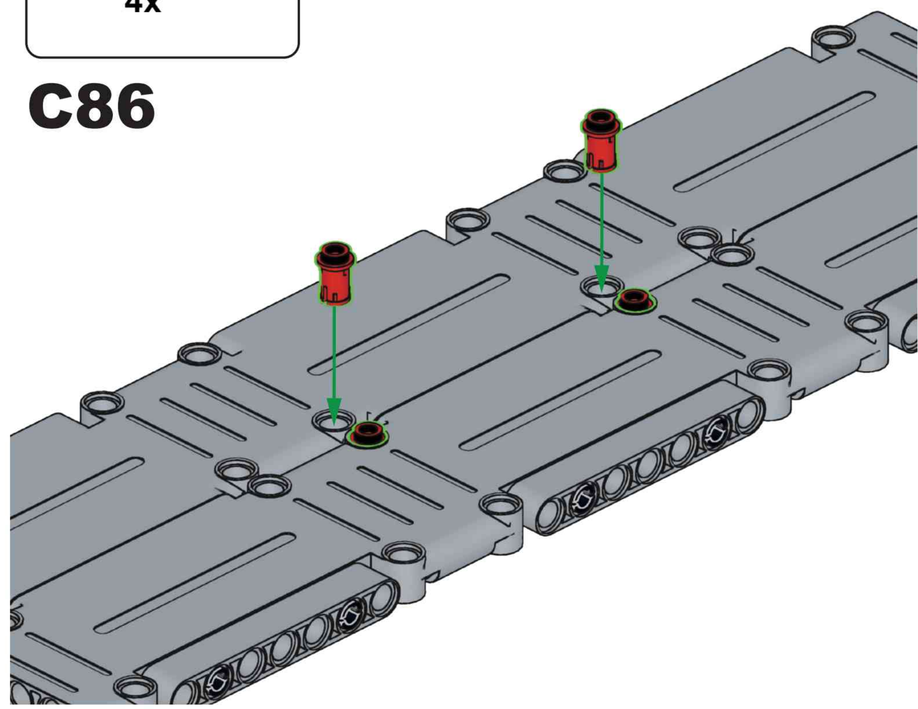

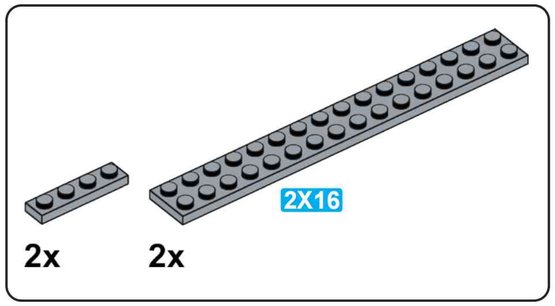

C87

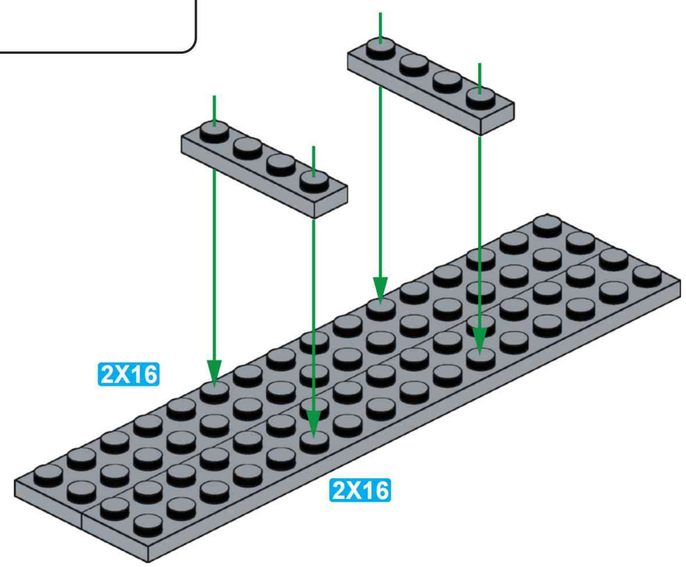

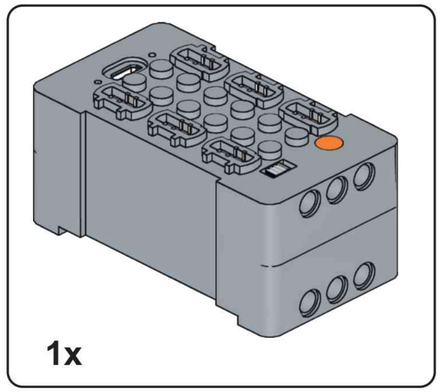

C88

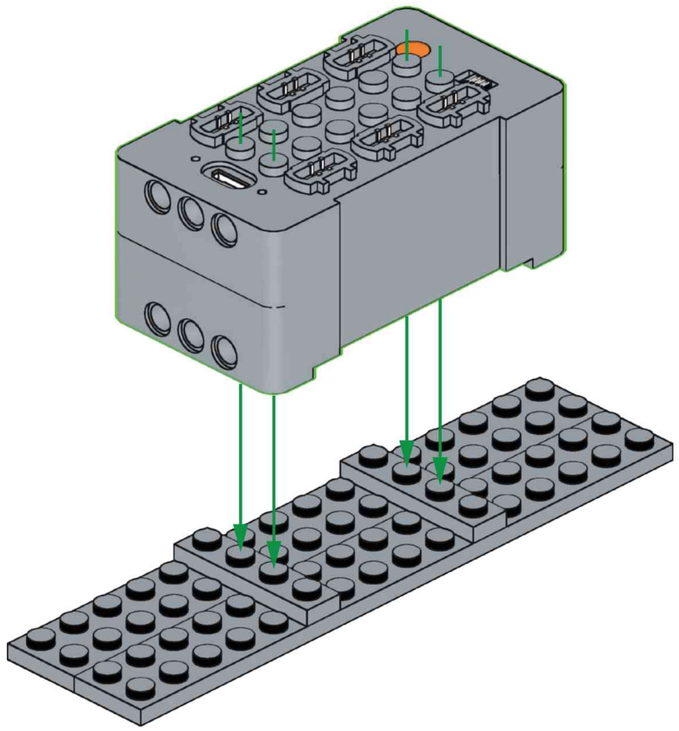

C89

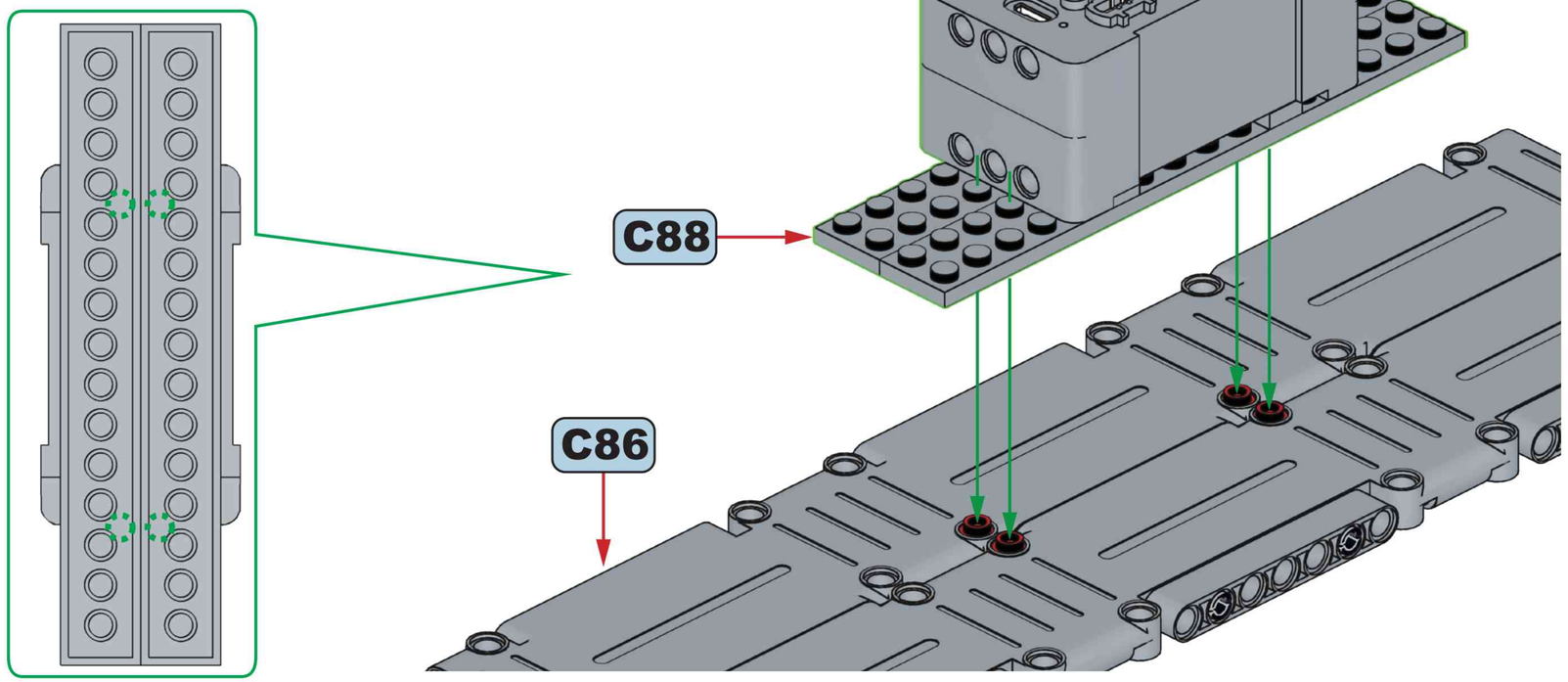

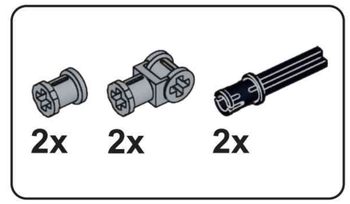

C90



x2

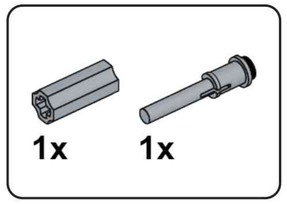

C91

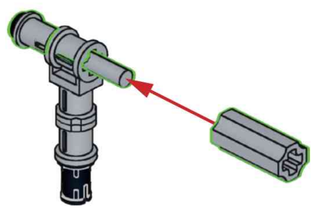

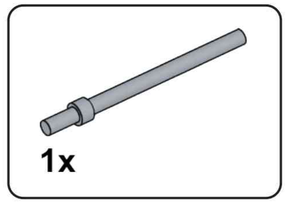

C92

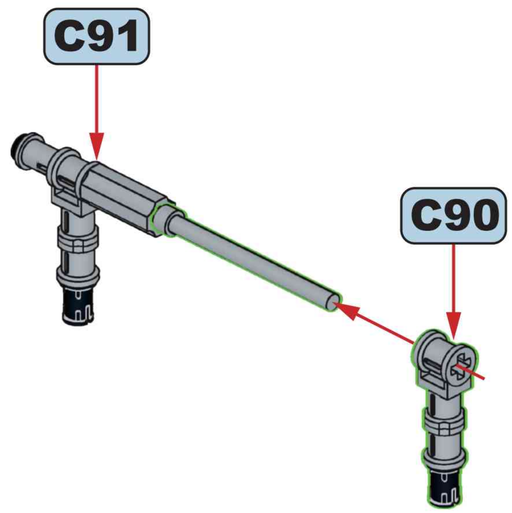

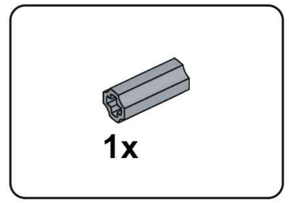

C93

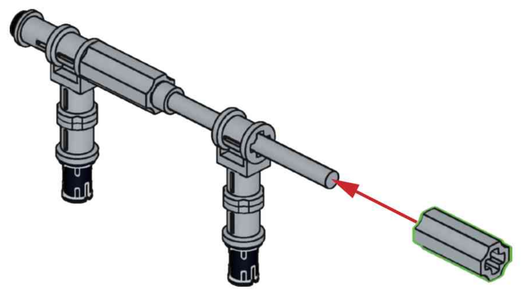

C94

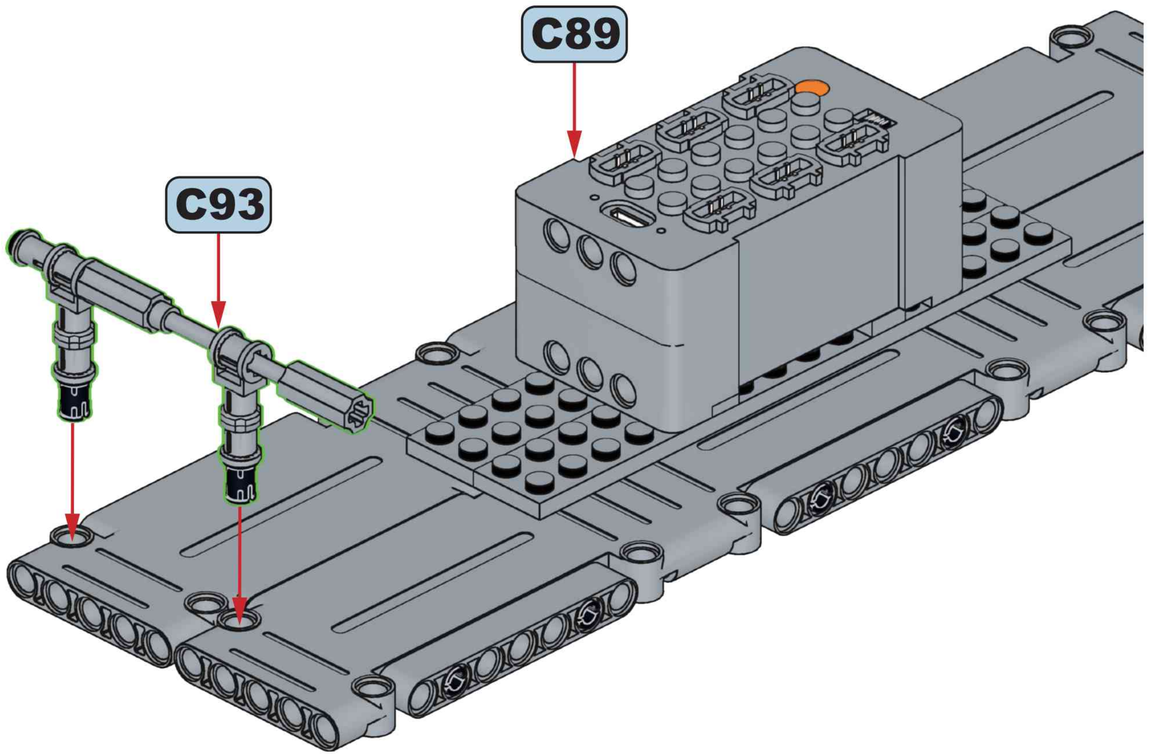

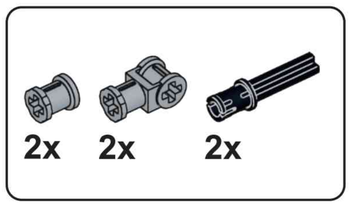

C95



x2

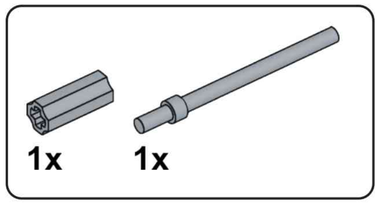

C96

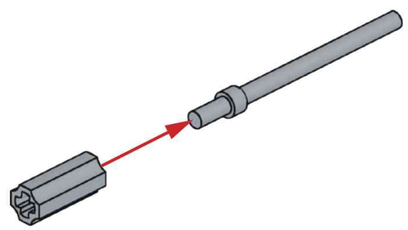

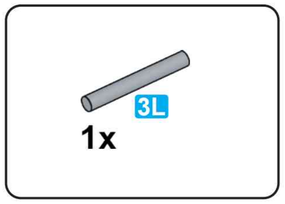

C97

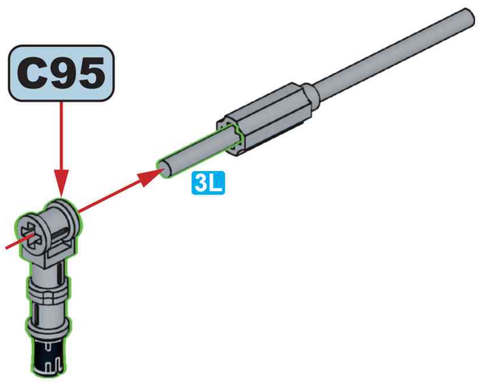

C98

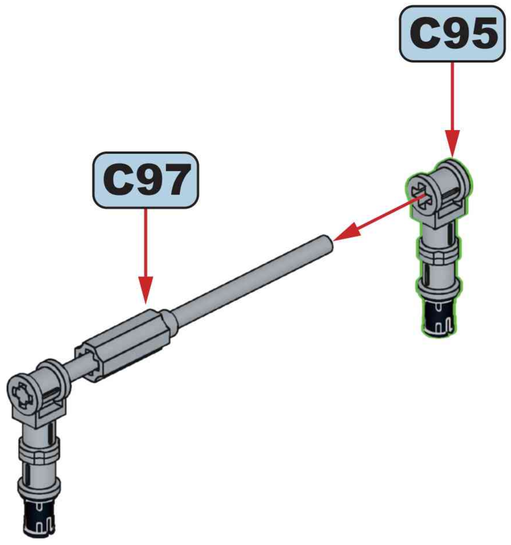

C99

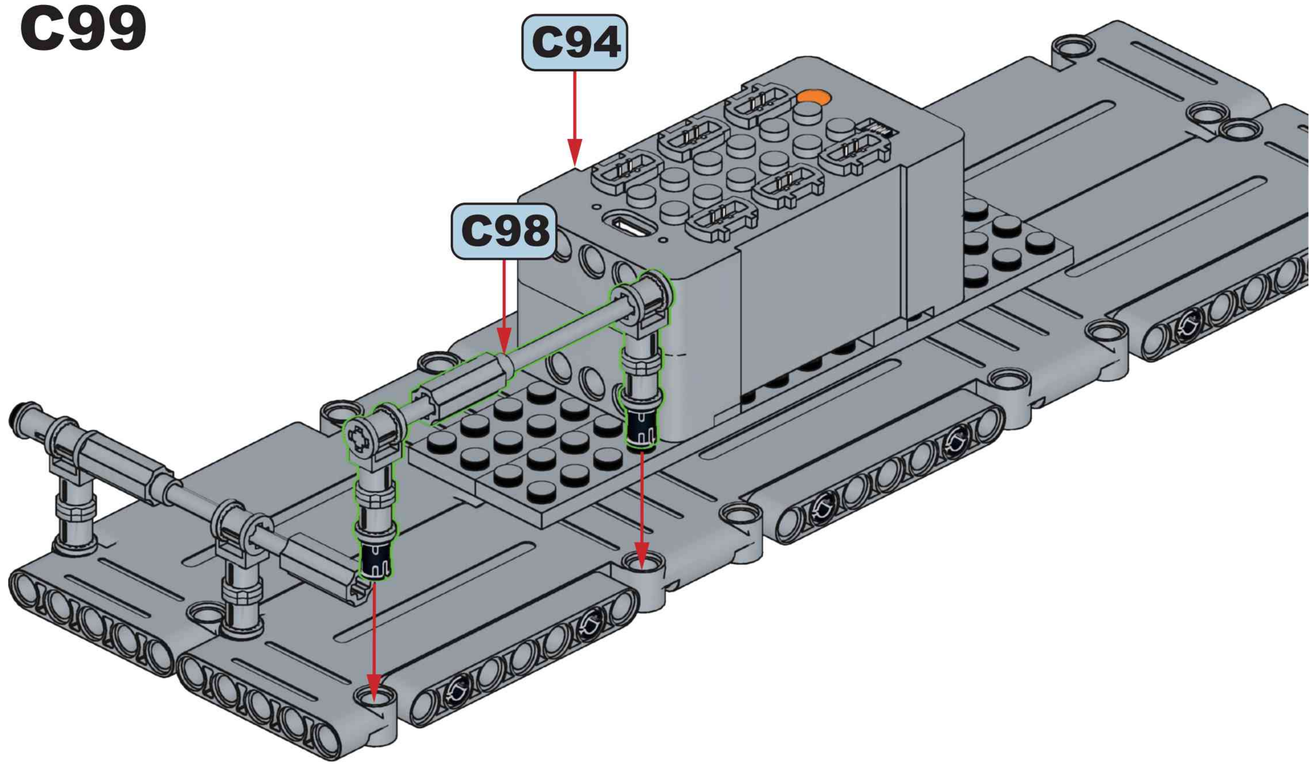

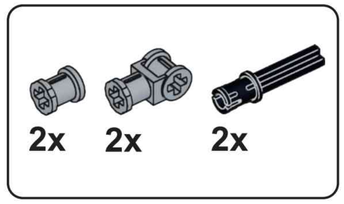

C100



x2

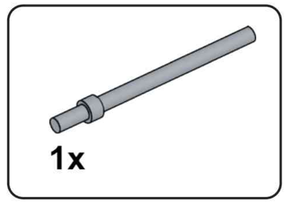

C101

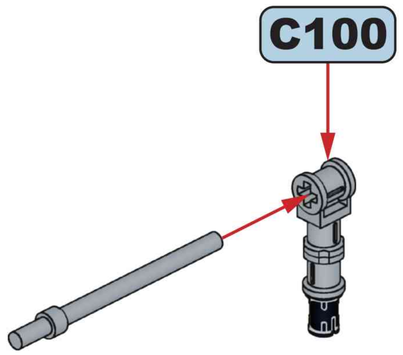

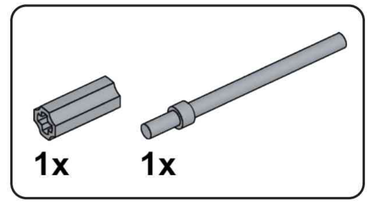

C102

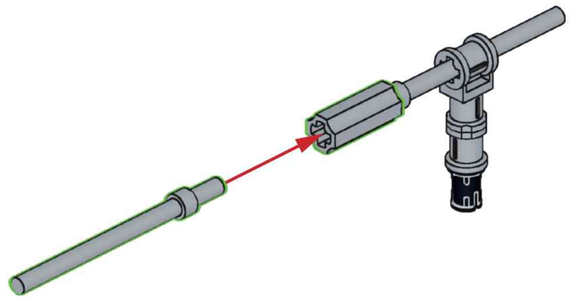

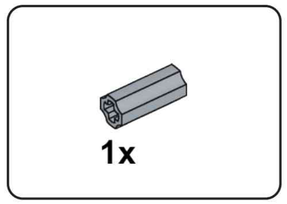

C103

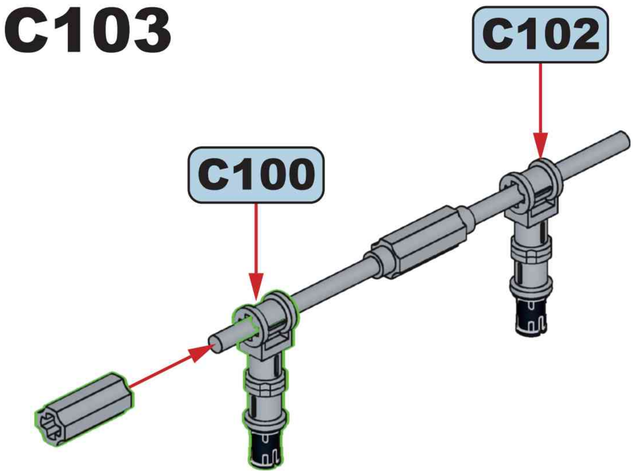

C104

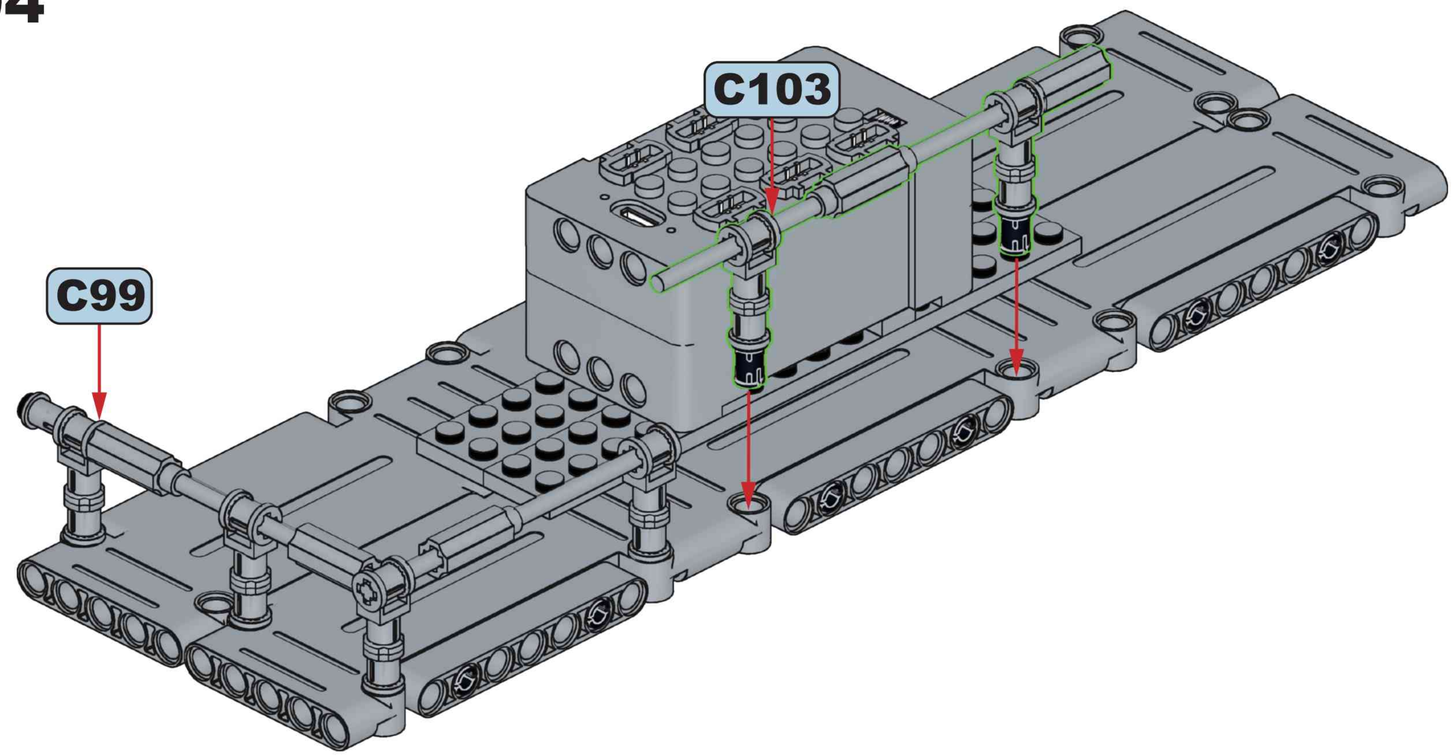

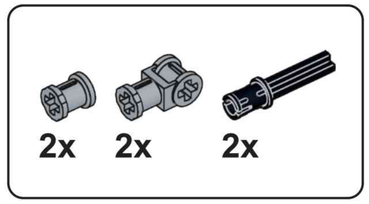

C105

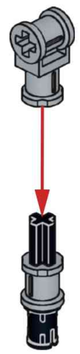

x2

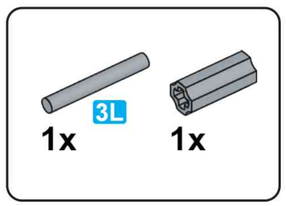

C106

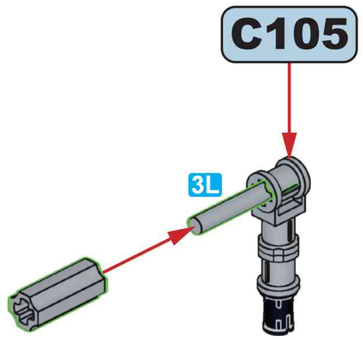

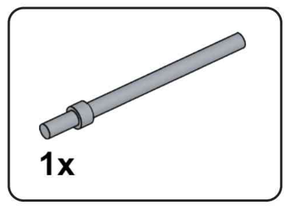

C107

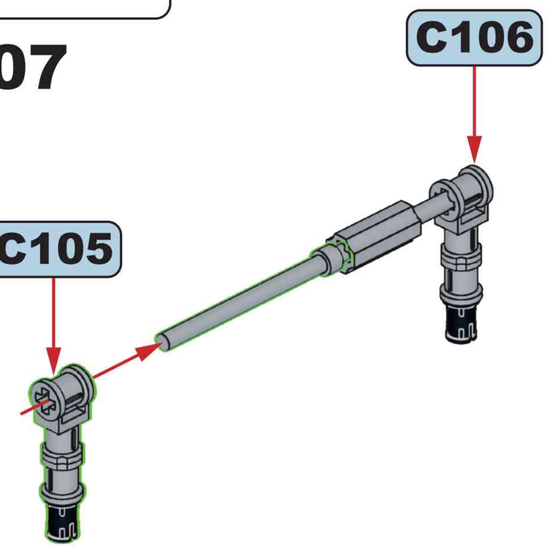

C108

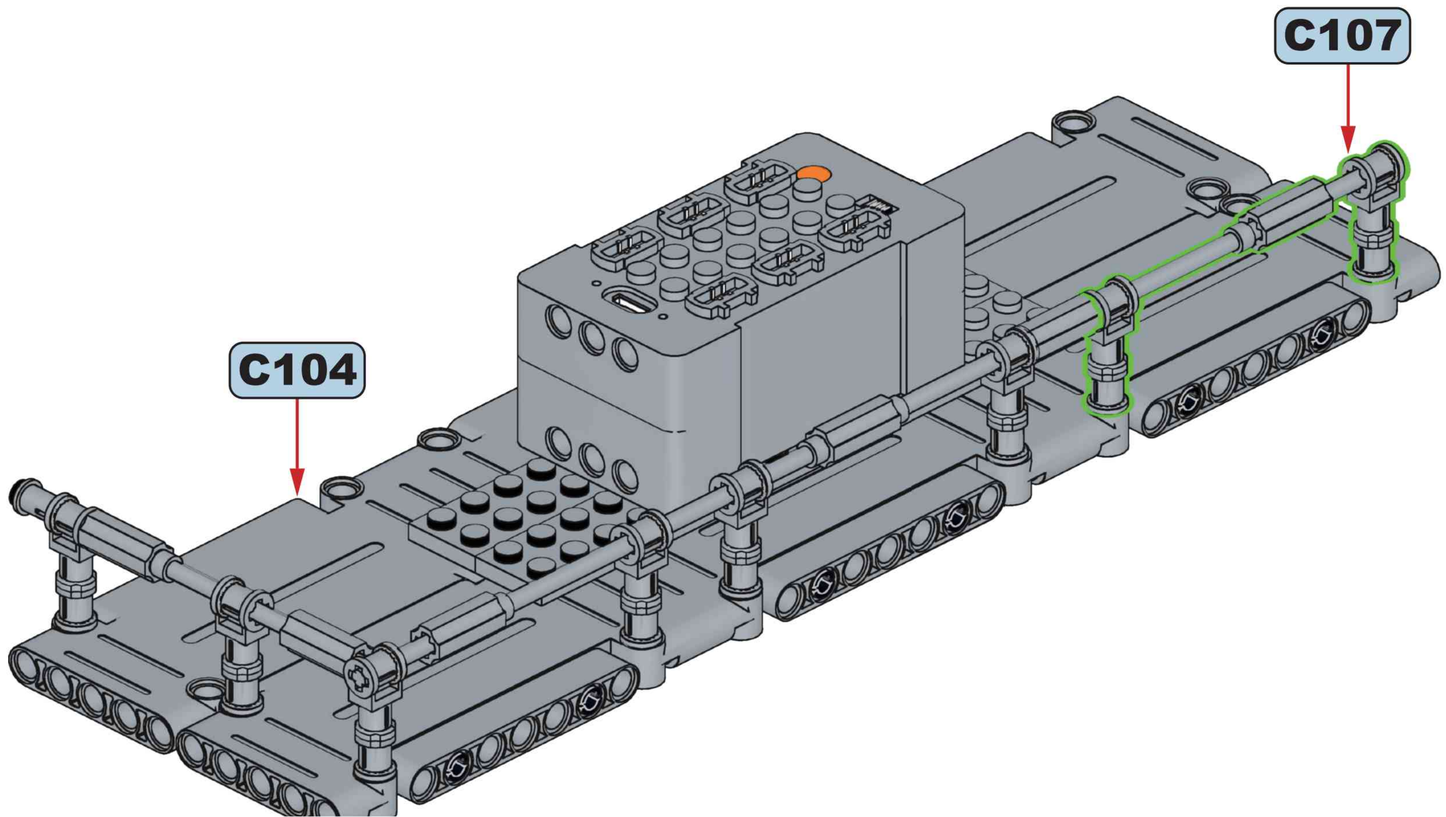

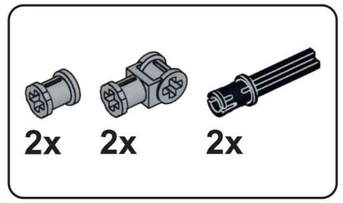

C109



x2

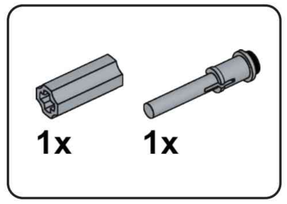

C110

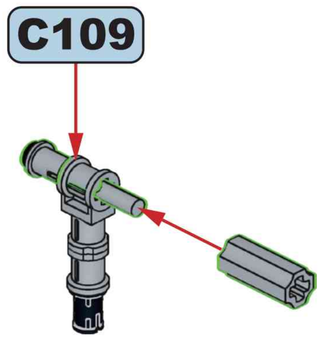

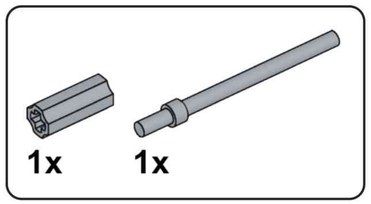

C111

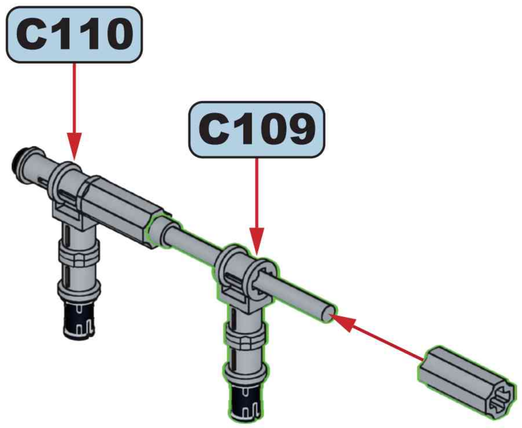

C112

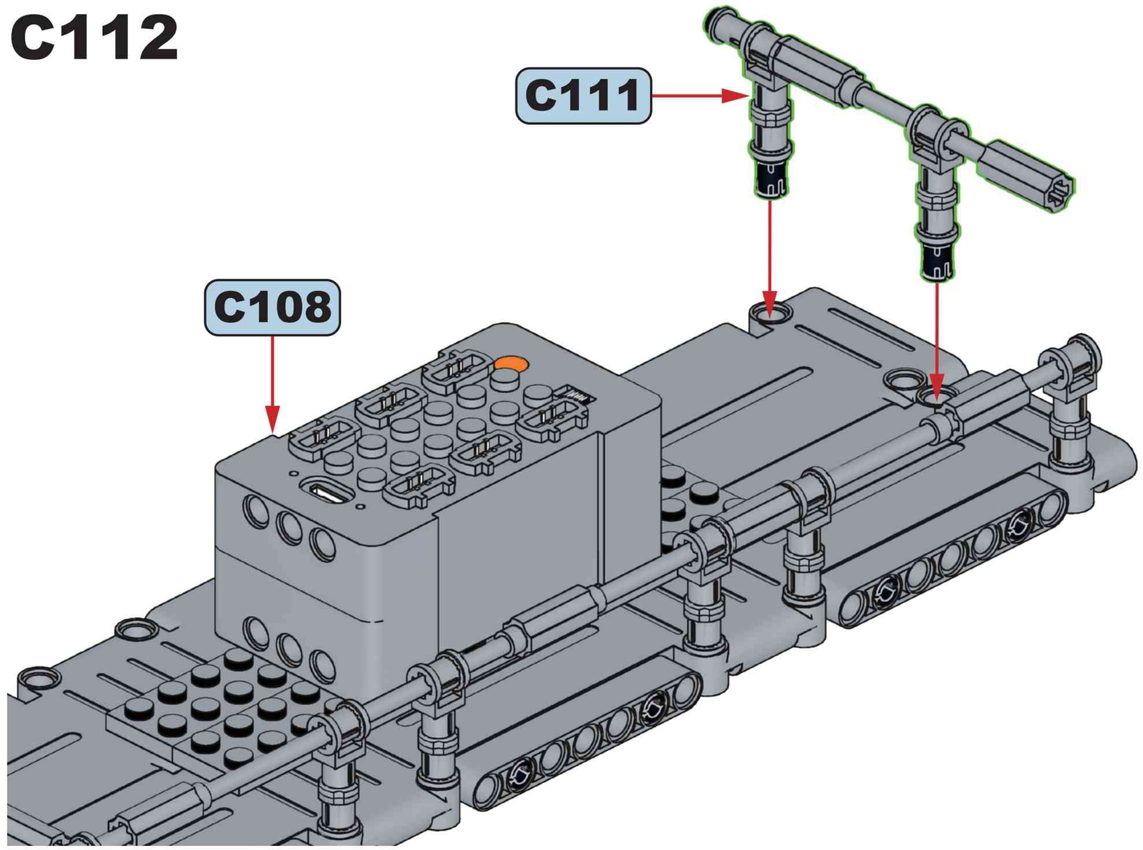

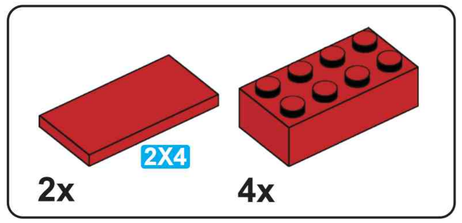

C113

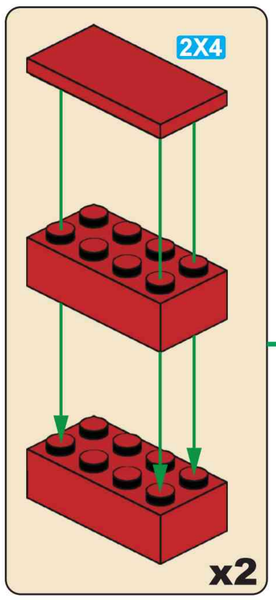

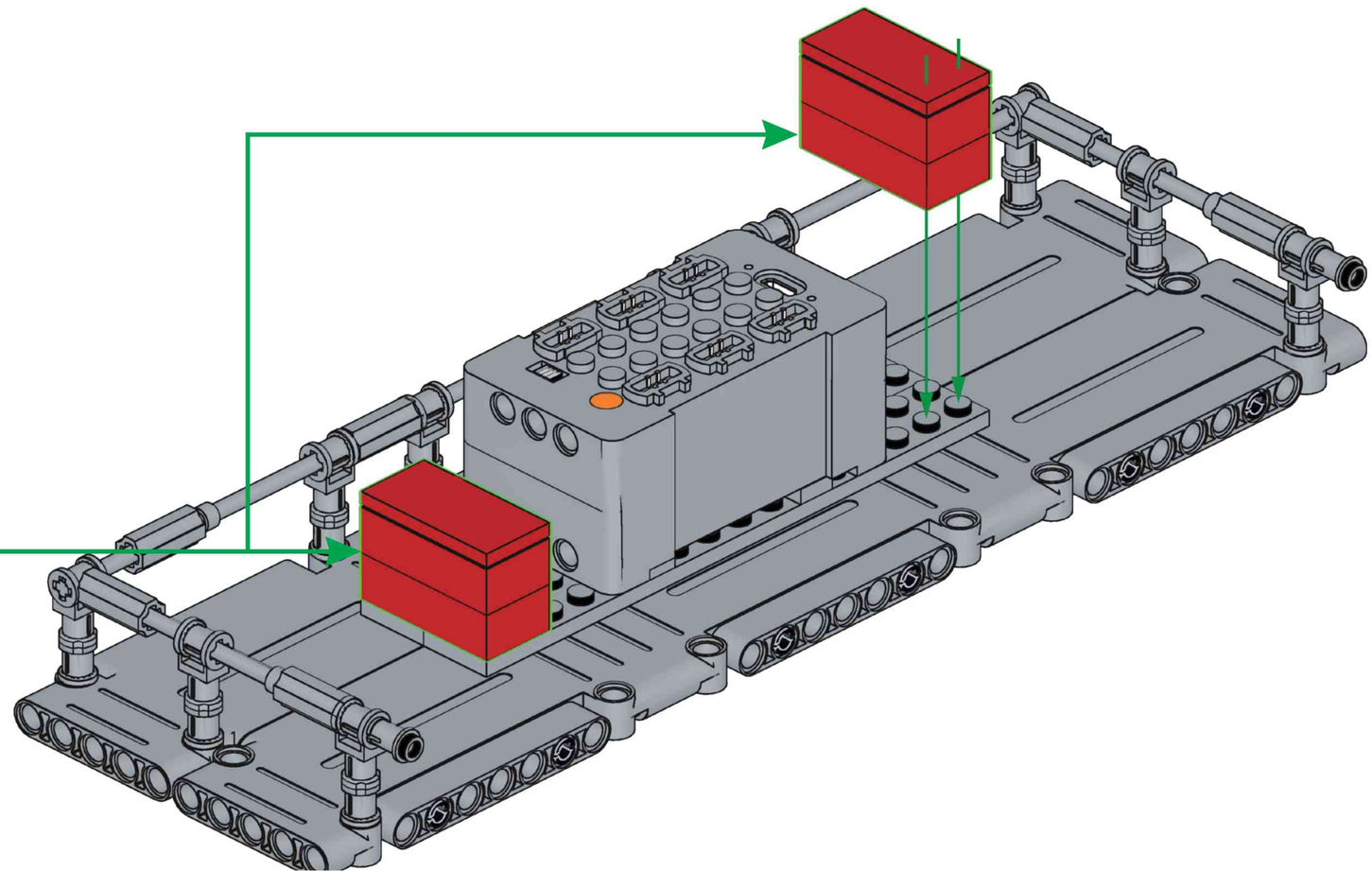

C114

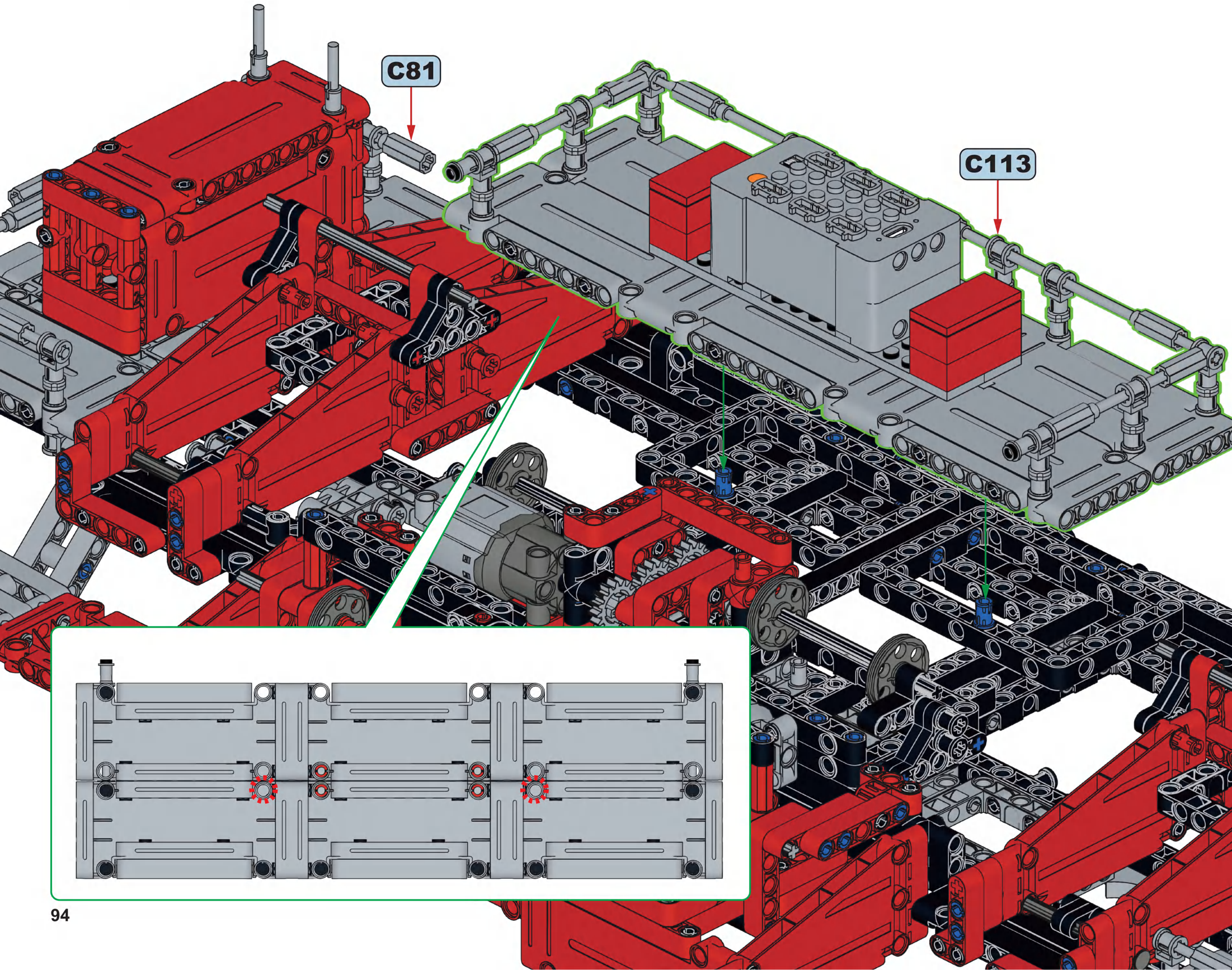



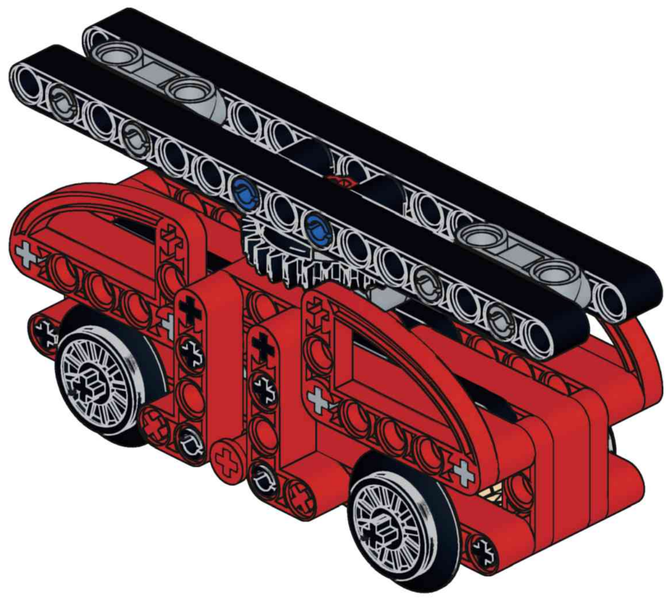

D

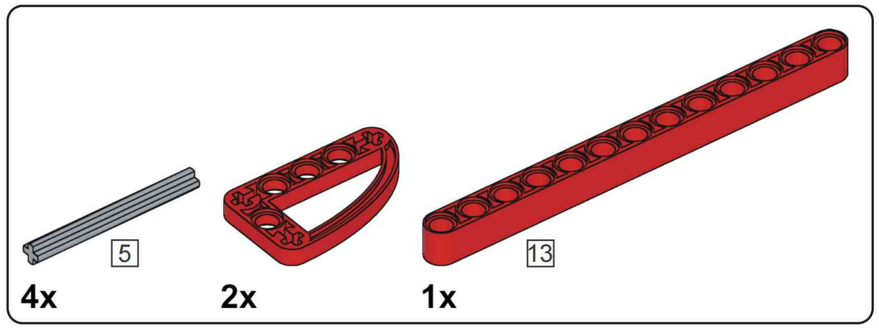

D1

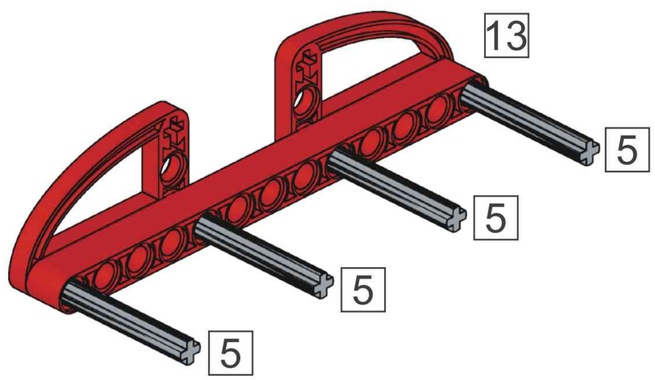

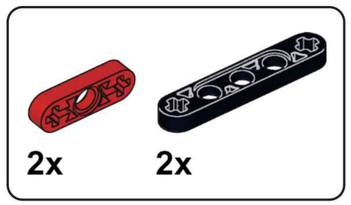

D2

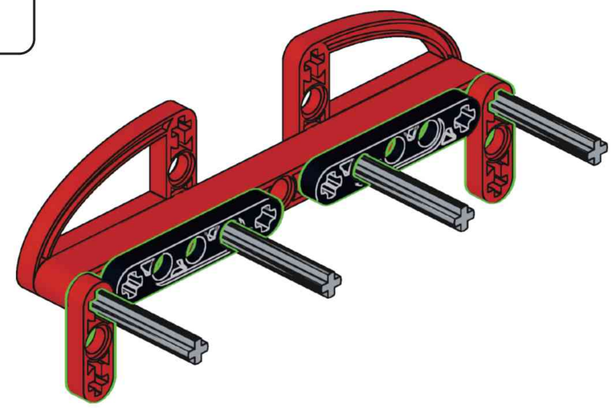

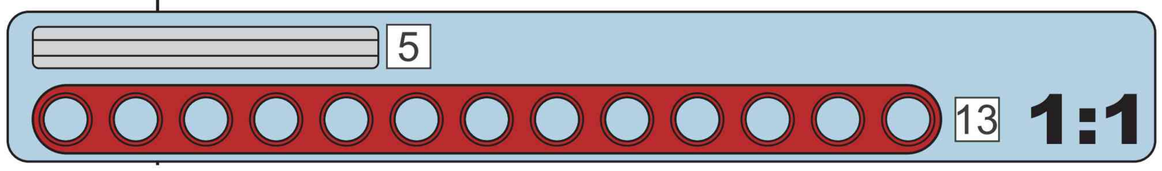

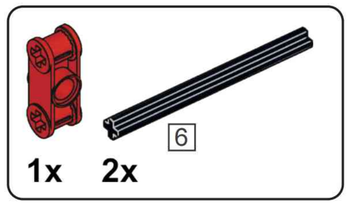

D3

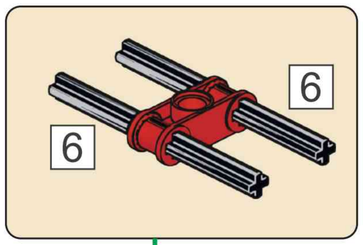

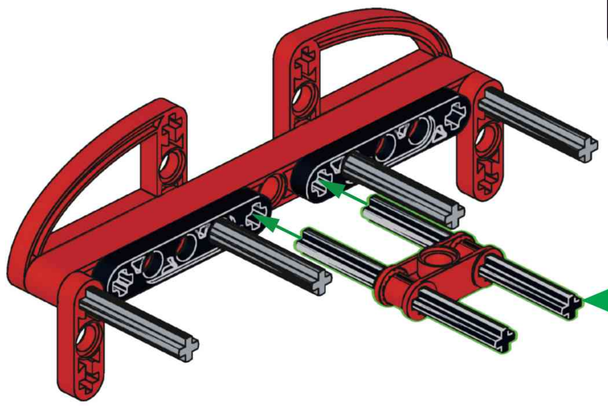

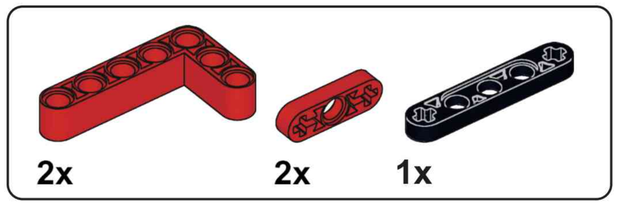

D4

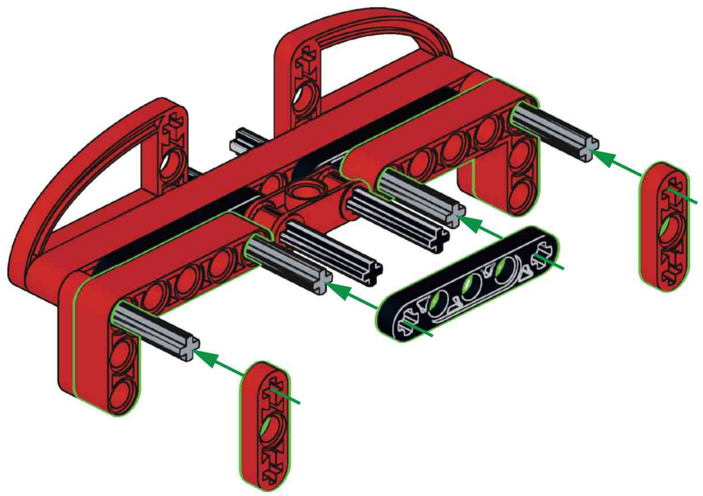

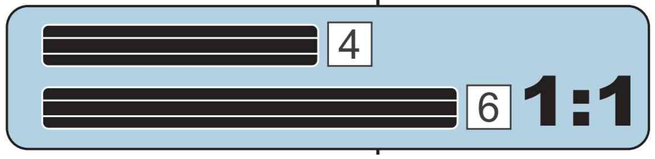

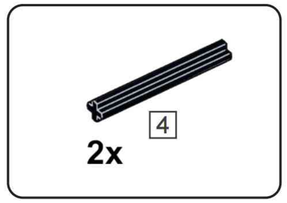

D5

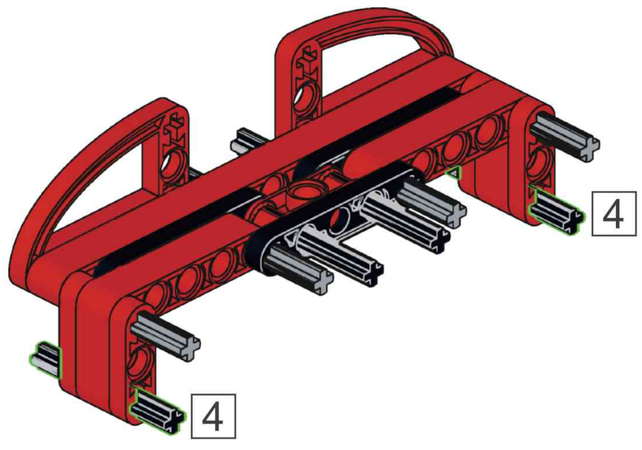

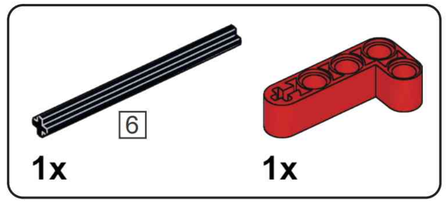

D6

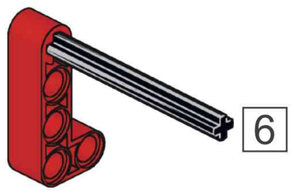

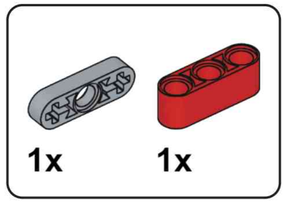

D7

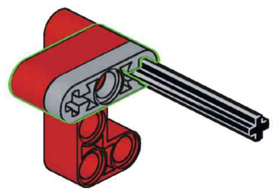

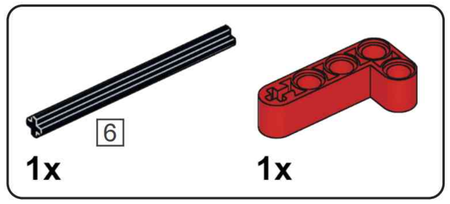

D8

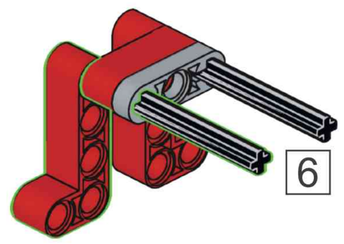

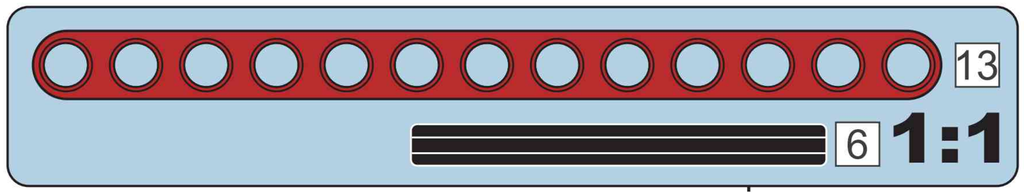

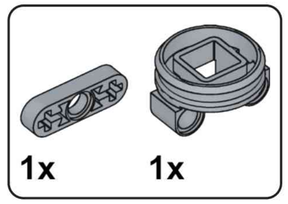

D9

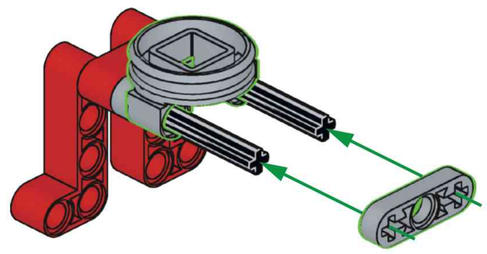

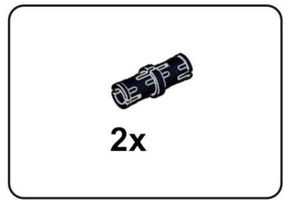

D10

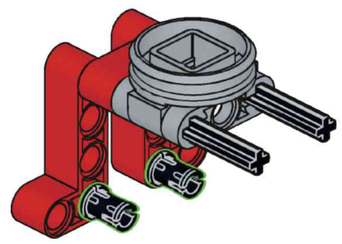

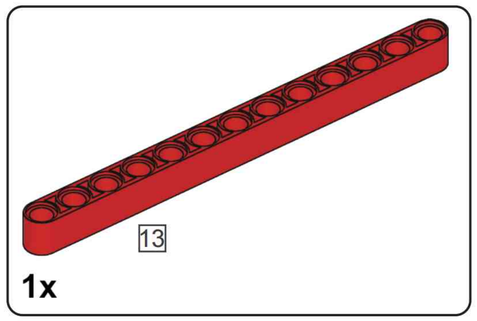

D11

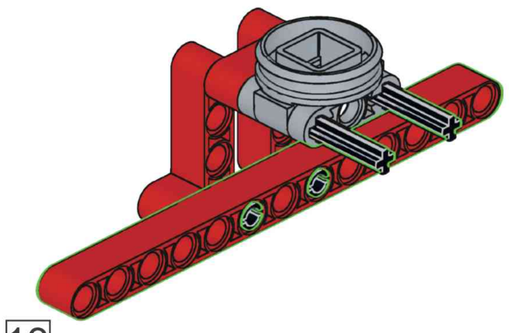

D12

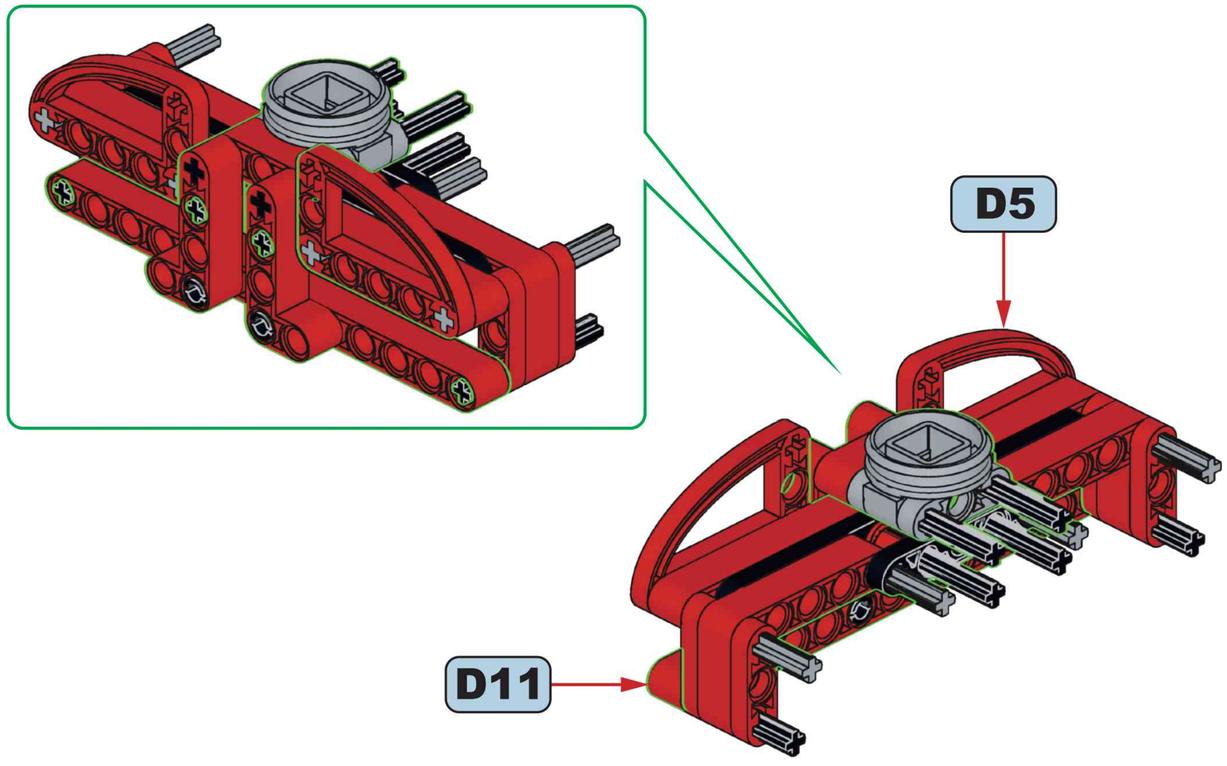

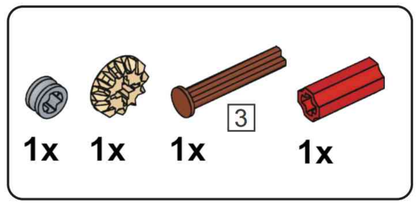

D13

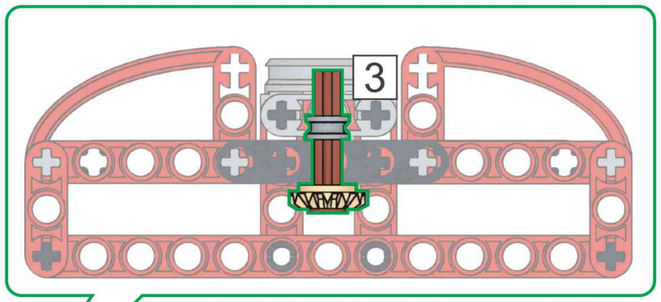

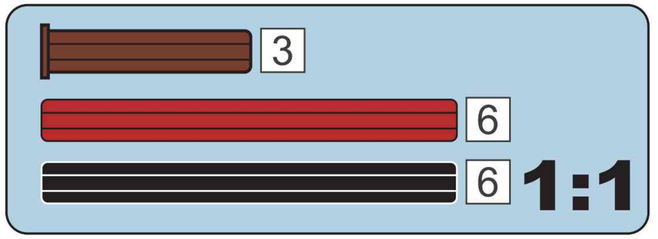

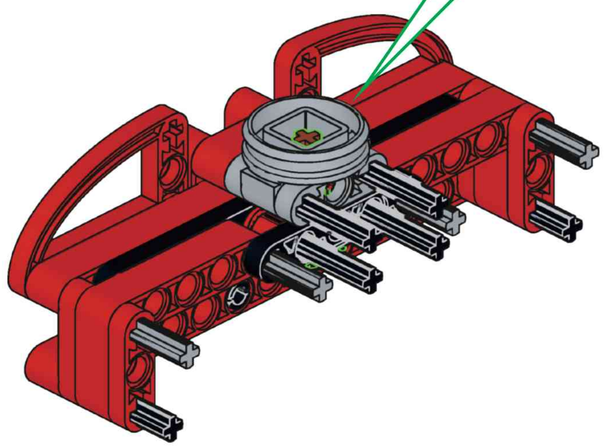

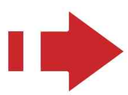

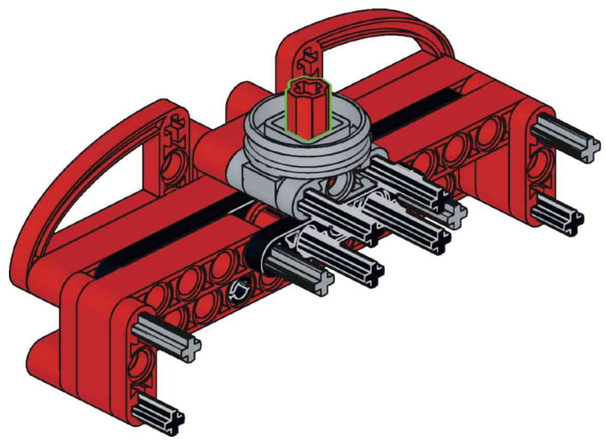

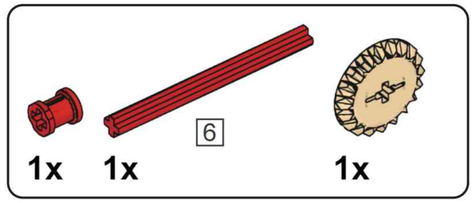



D14

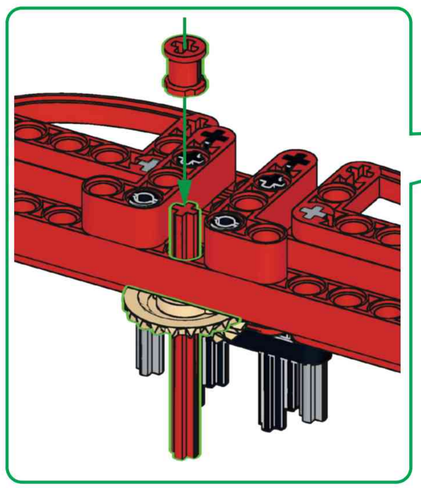

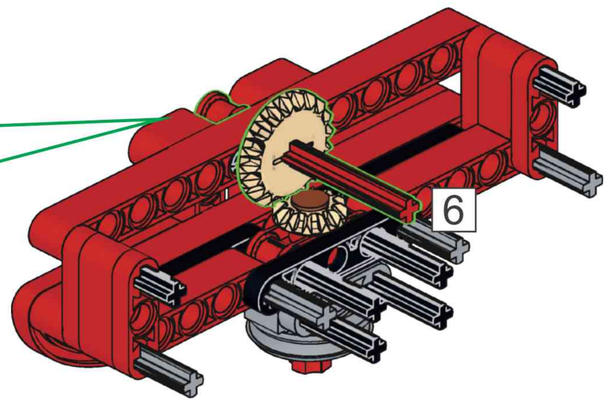

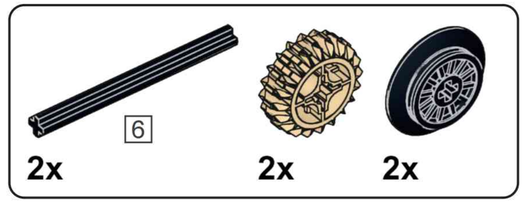

D15

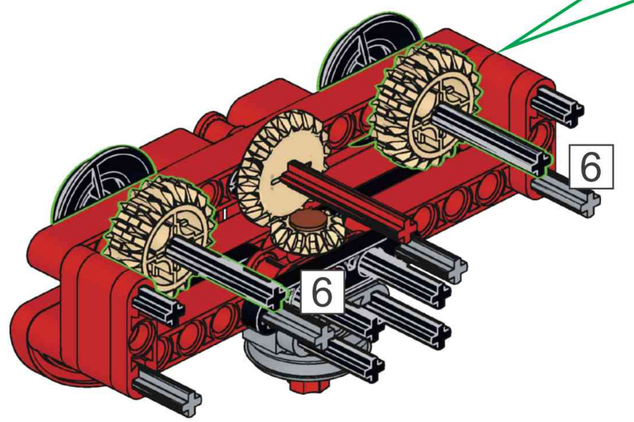

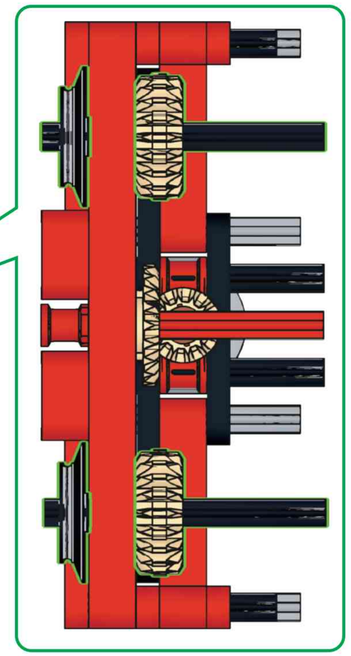

1x 2x 1x

D16

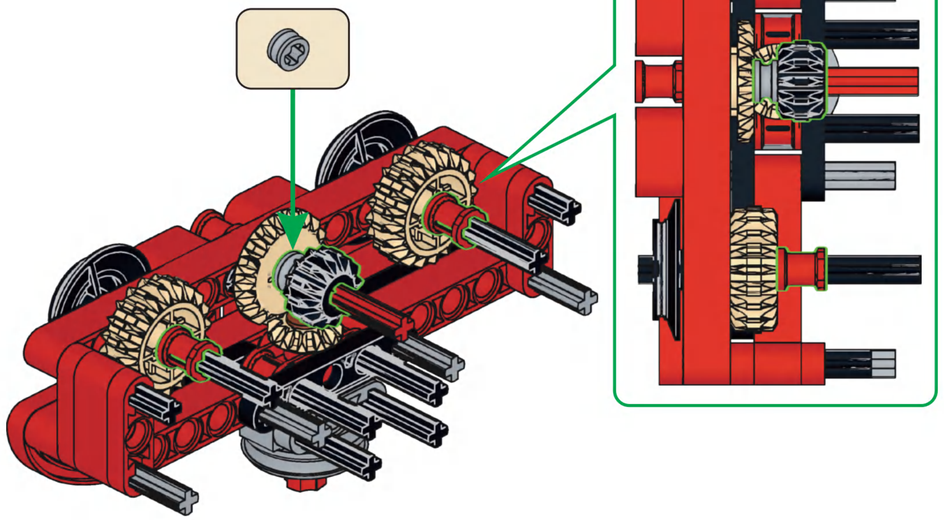

2x 2x 2x 6 2x

D17

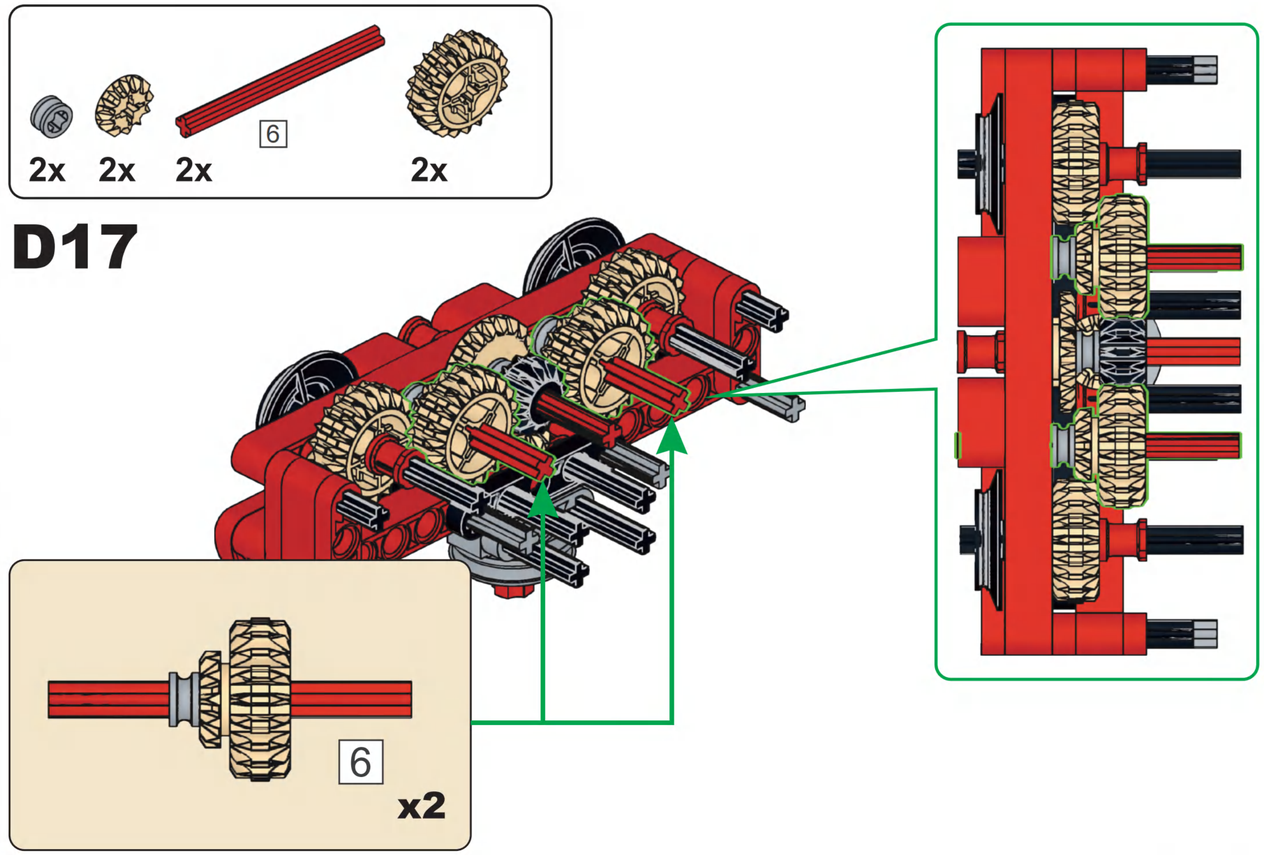

1x

13

D18

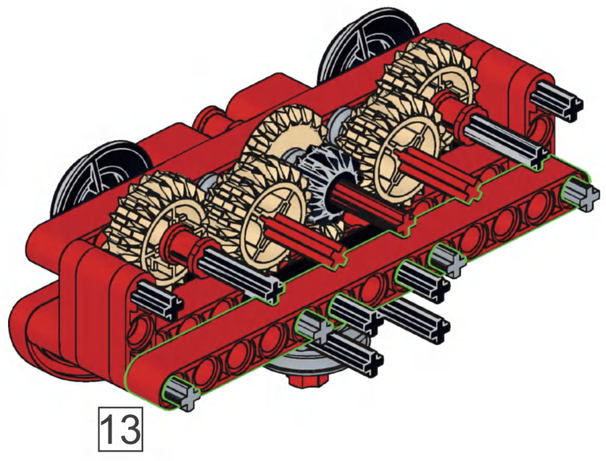

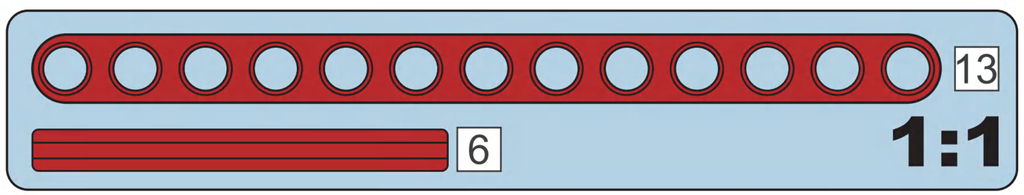

2x 1x

13

D19

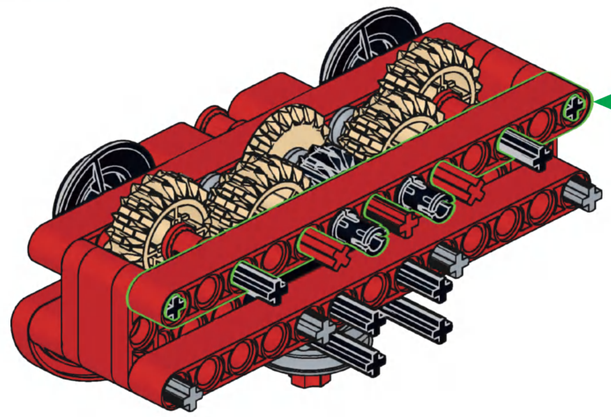

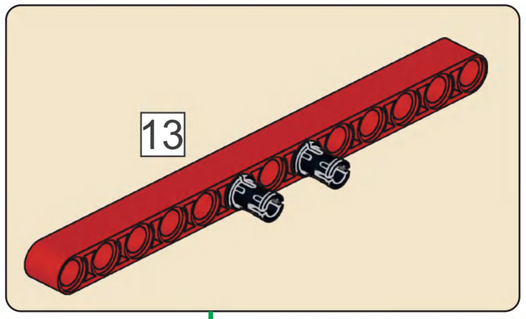

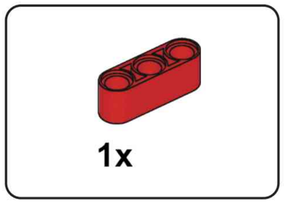

D20



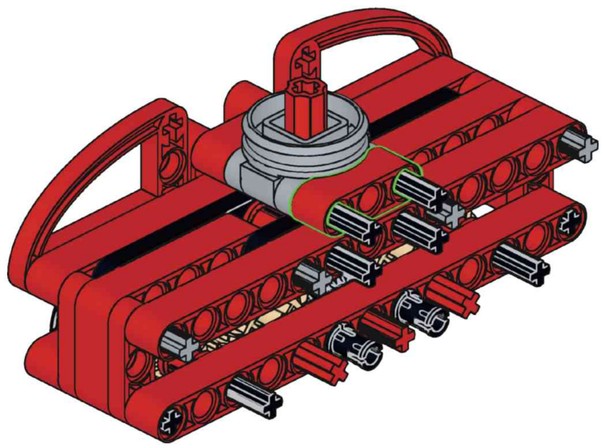

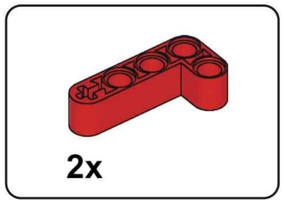

D21

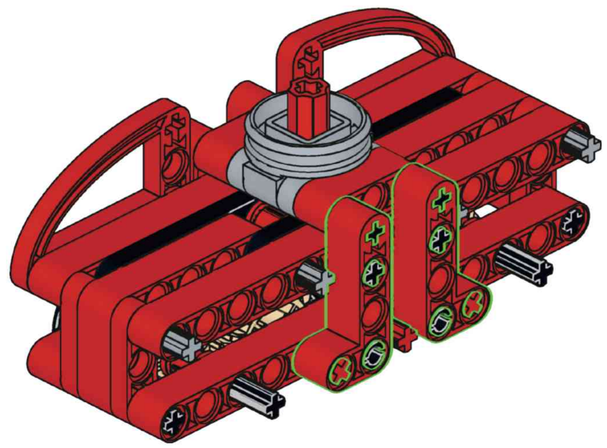

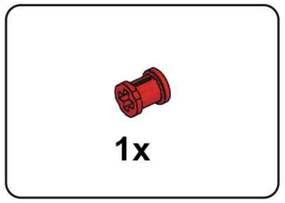

D22

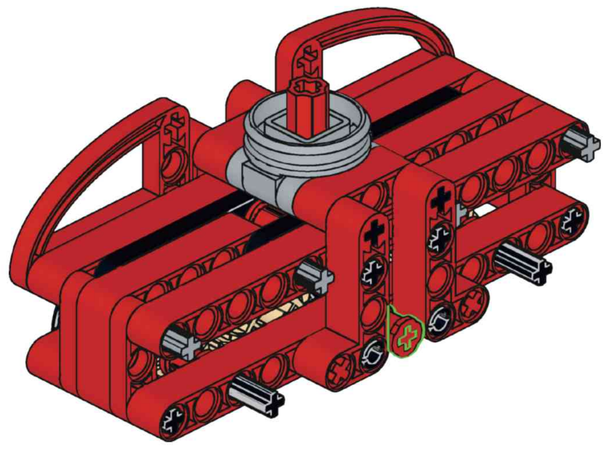

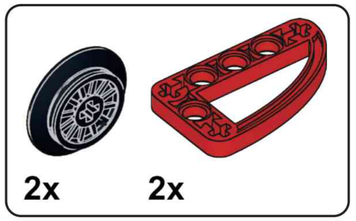

D23

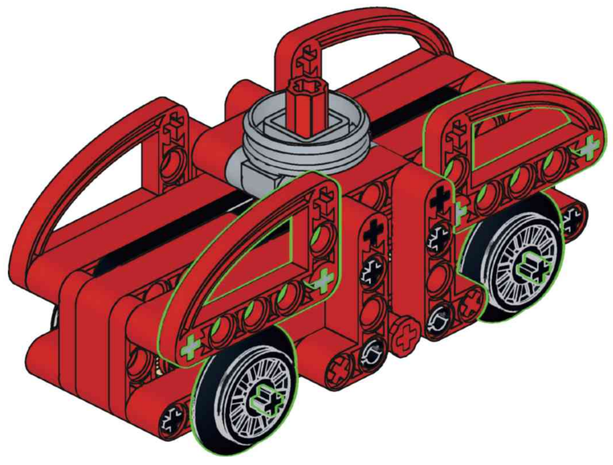

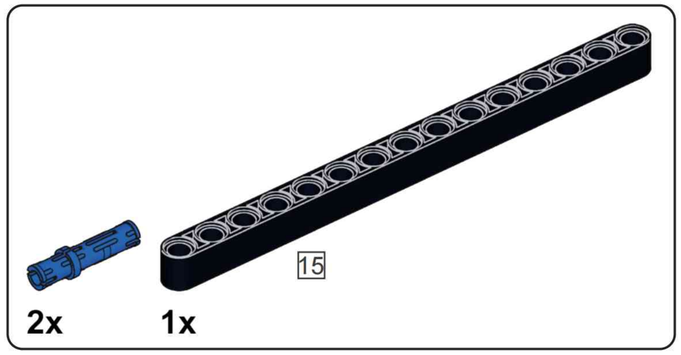

D24

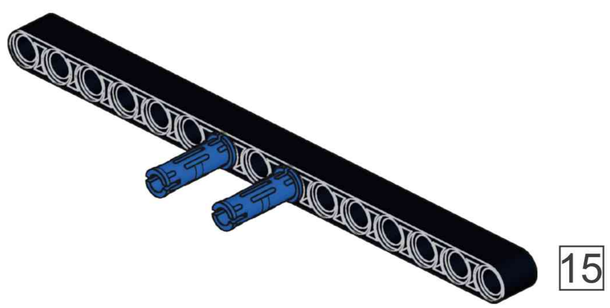

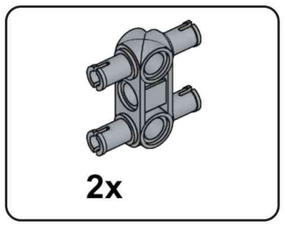

D25

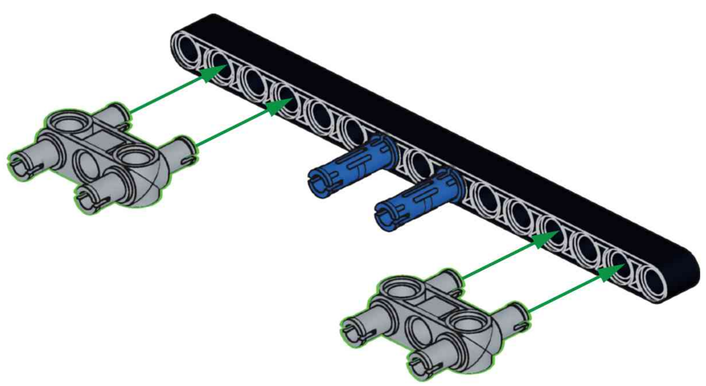

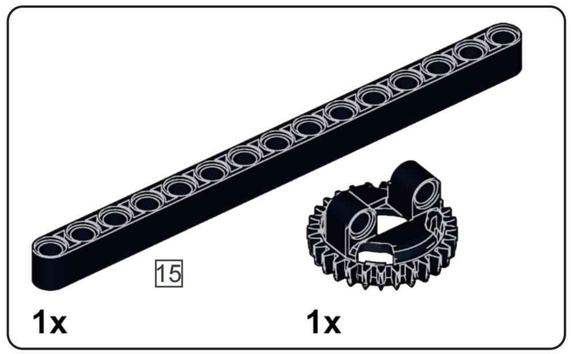

D26

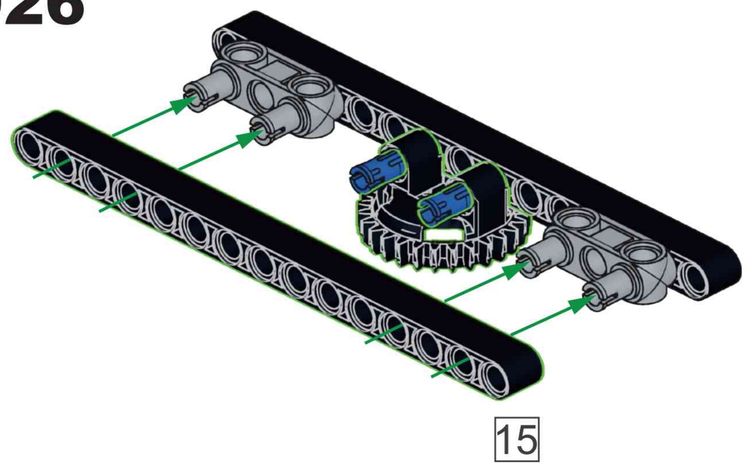

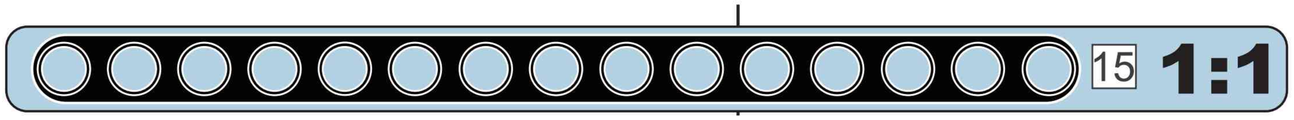

D27

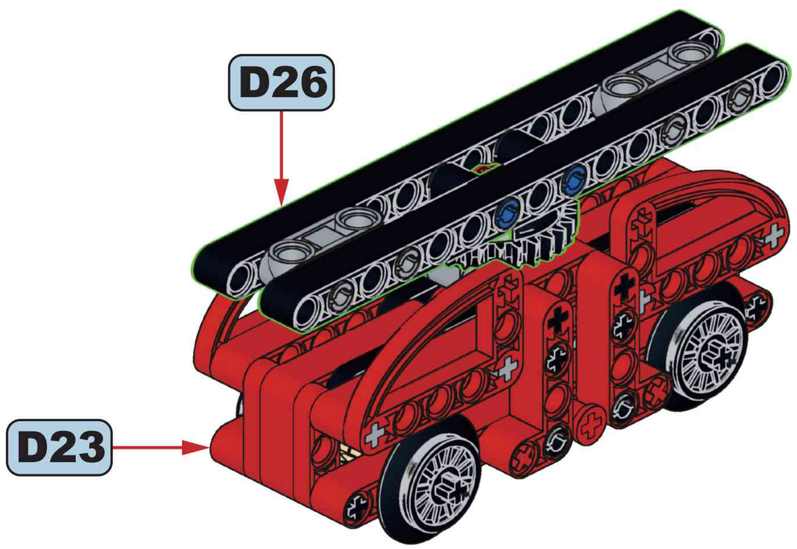

D28

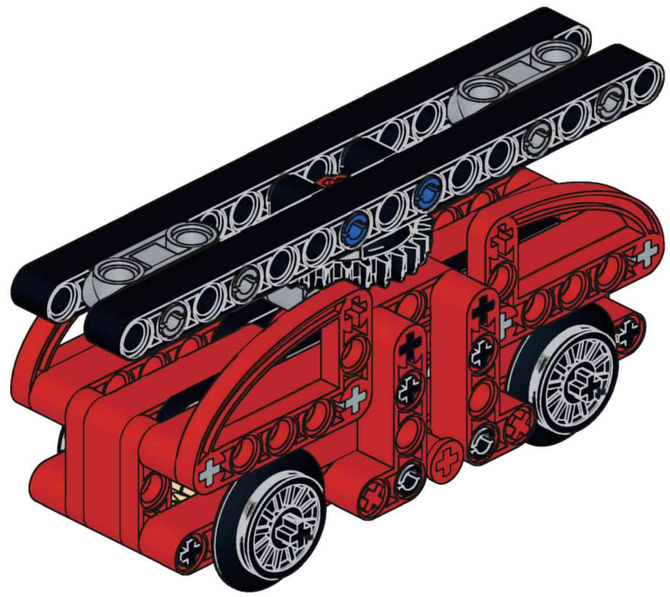

x4



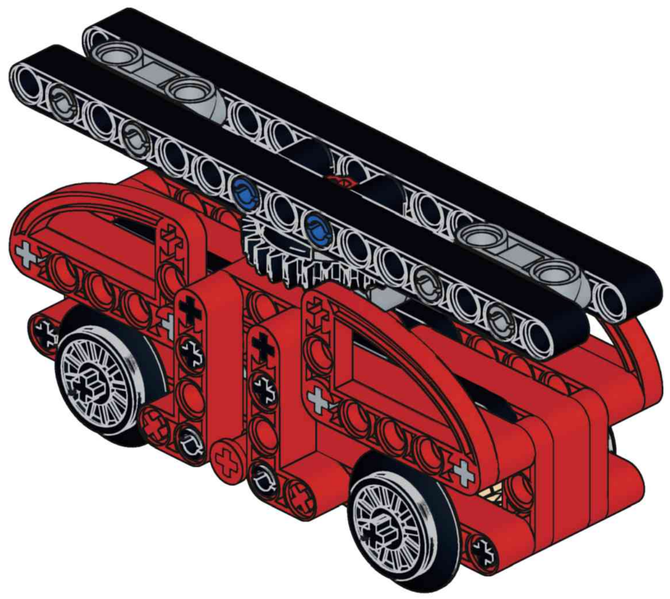

E

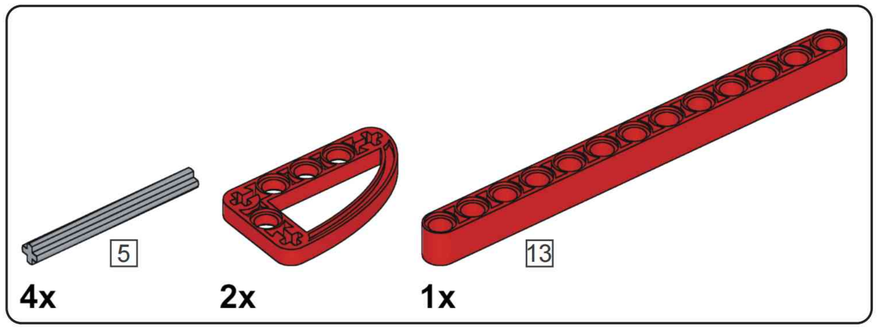

E1

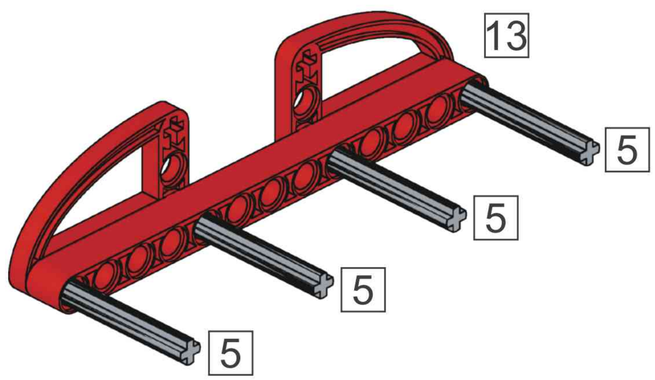

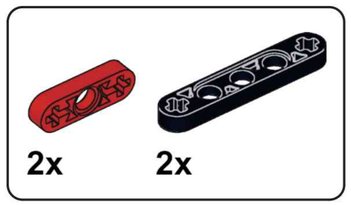

E2

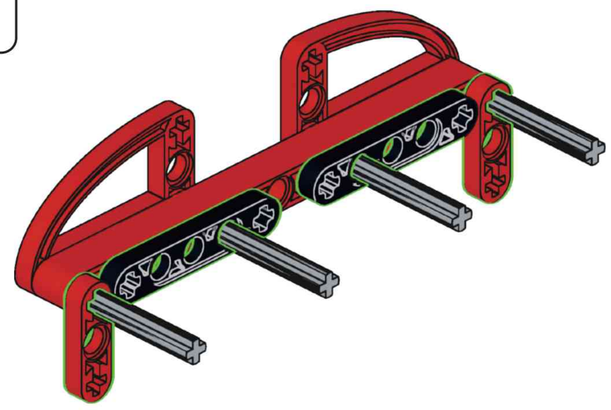

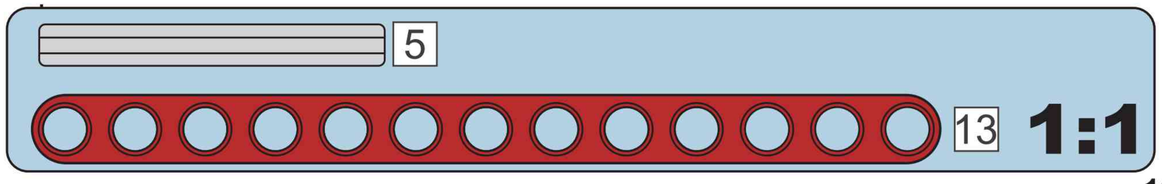

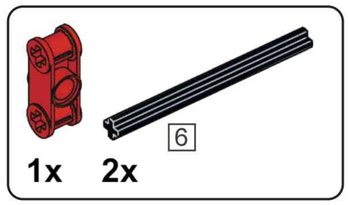

E3

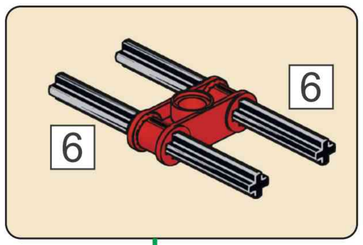

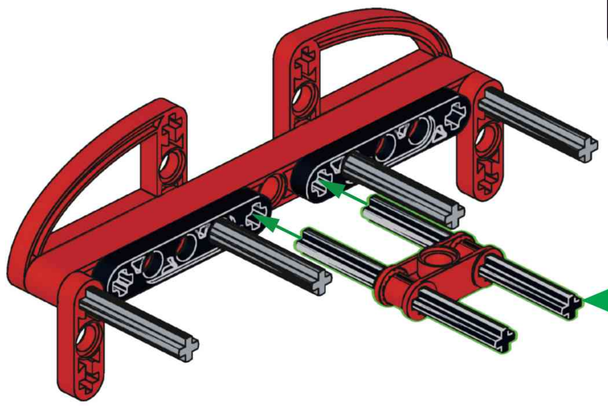

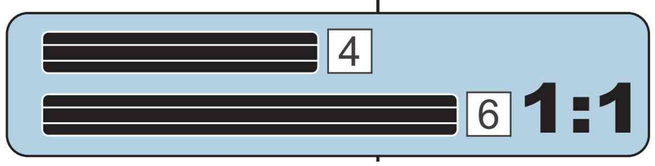

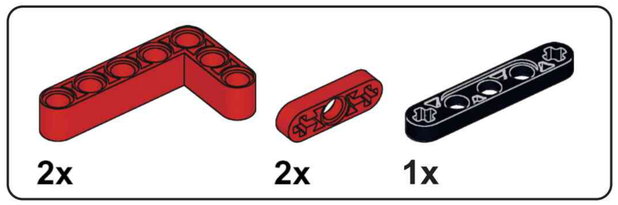

E4

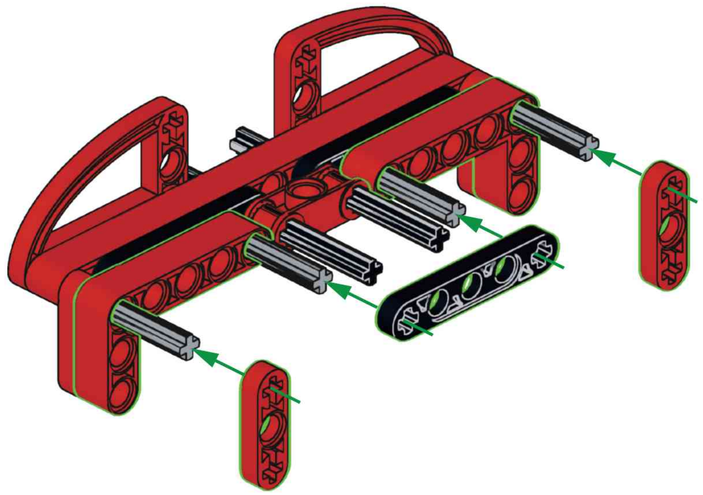

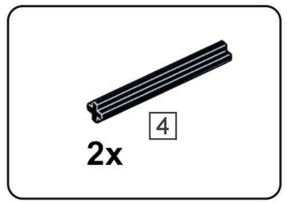

E5

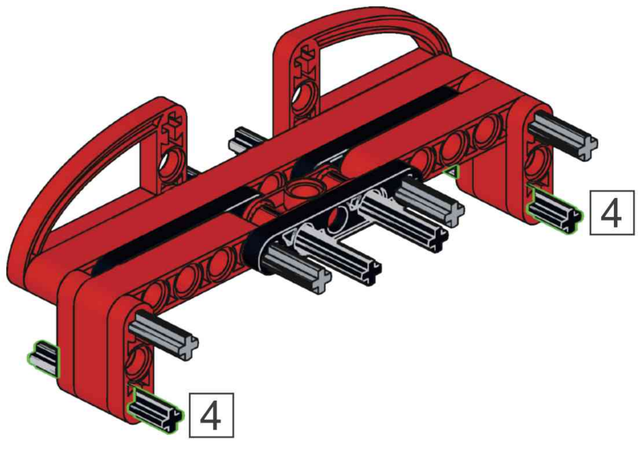

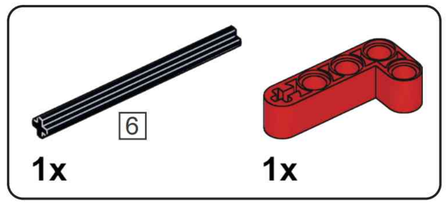

E6

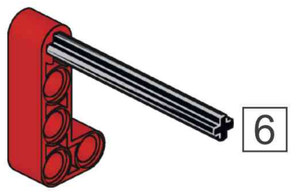

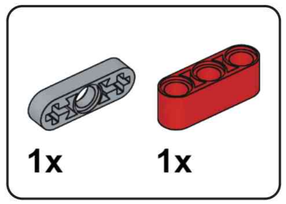

E7

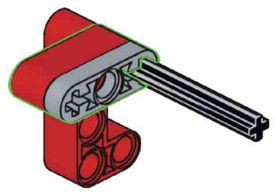

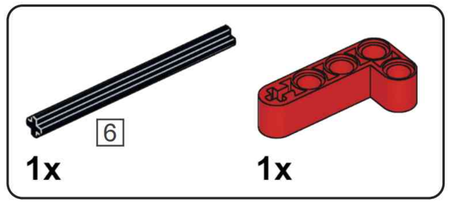

E8

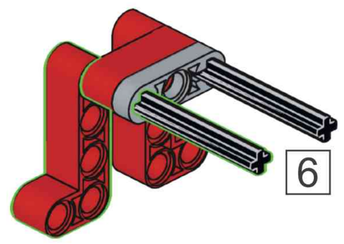

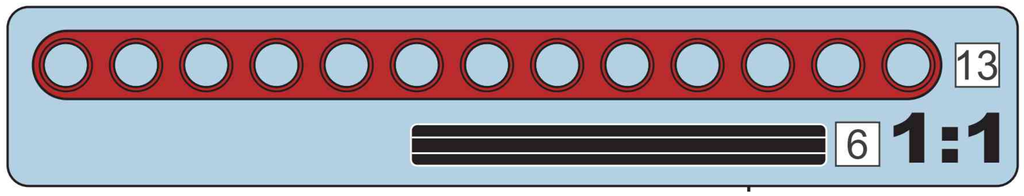

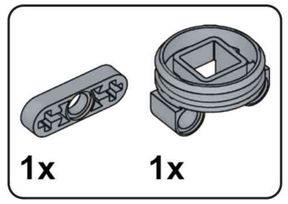

E9

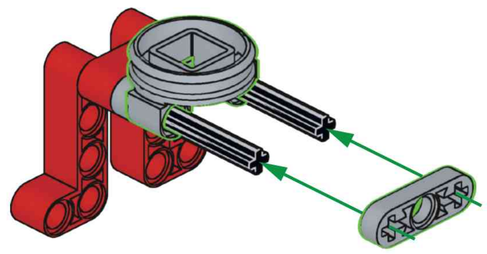

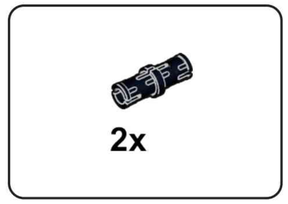

E10

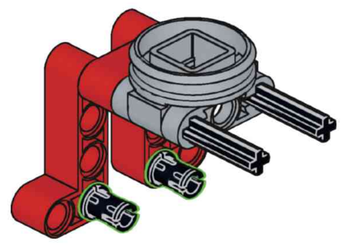

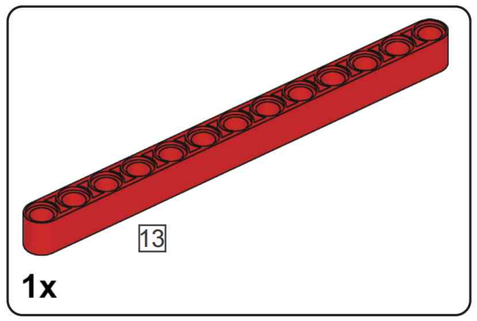

E11

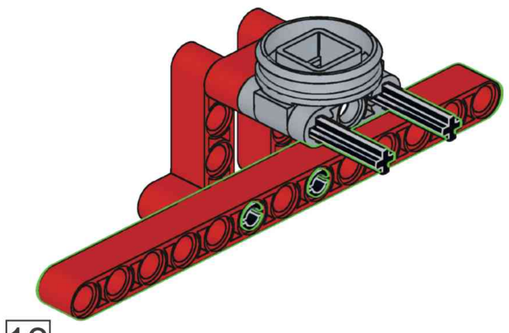

E12

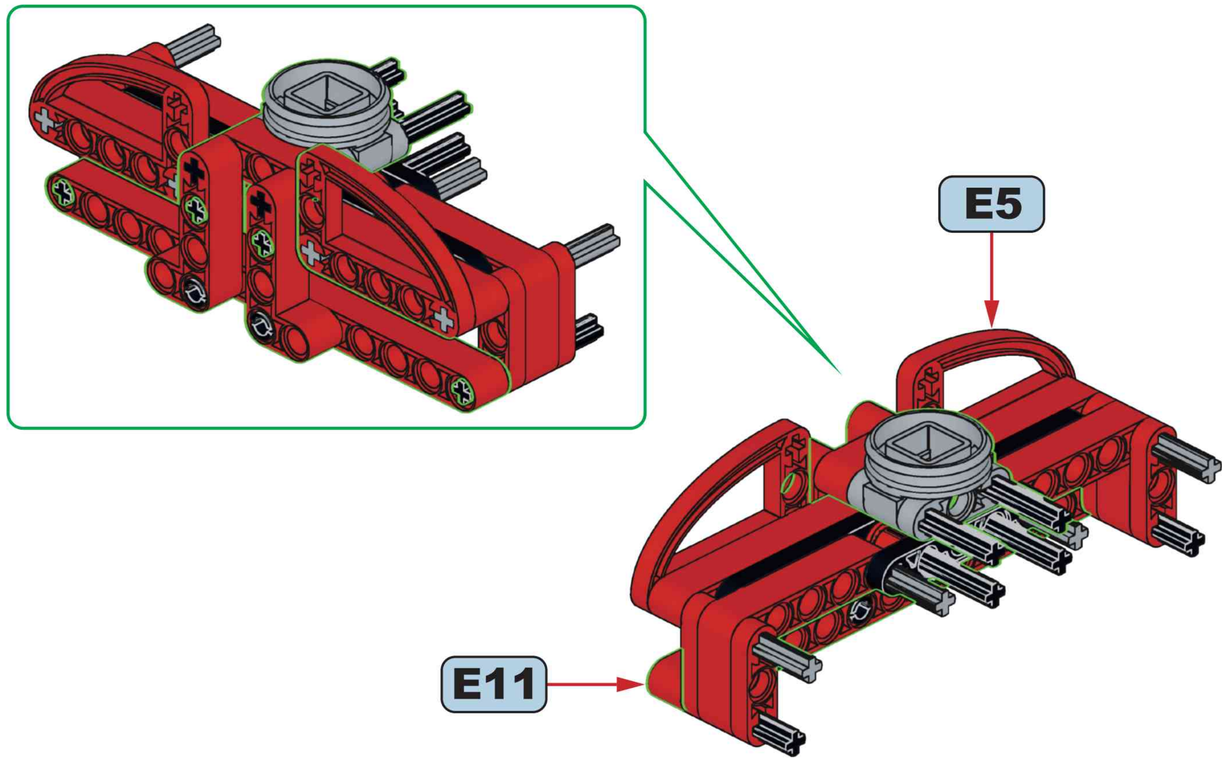

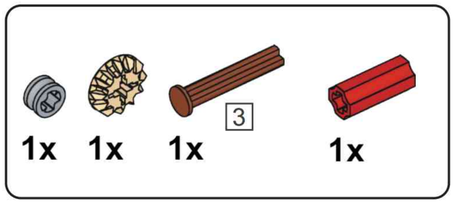

E13

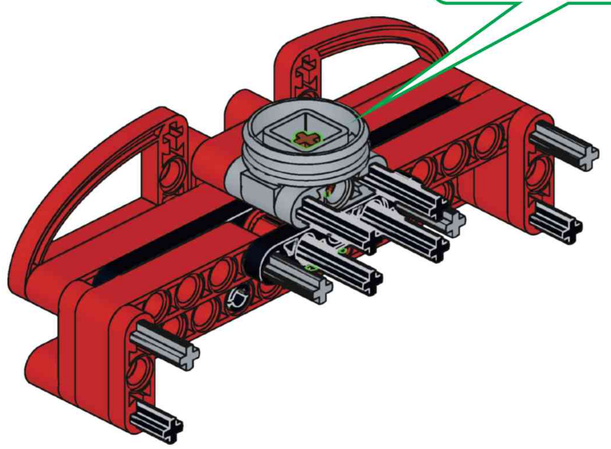

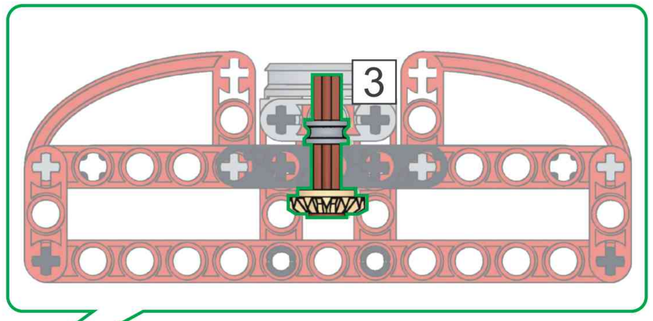

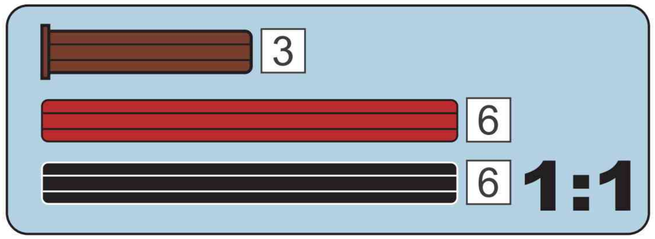

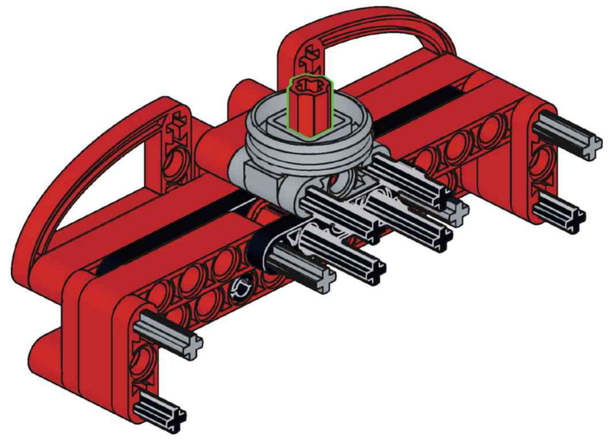

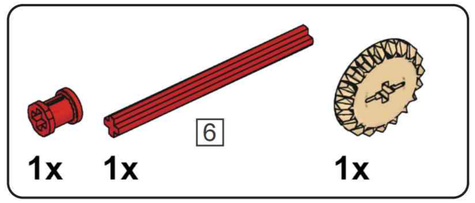

E14

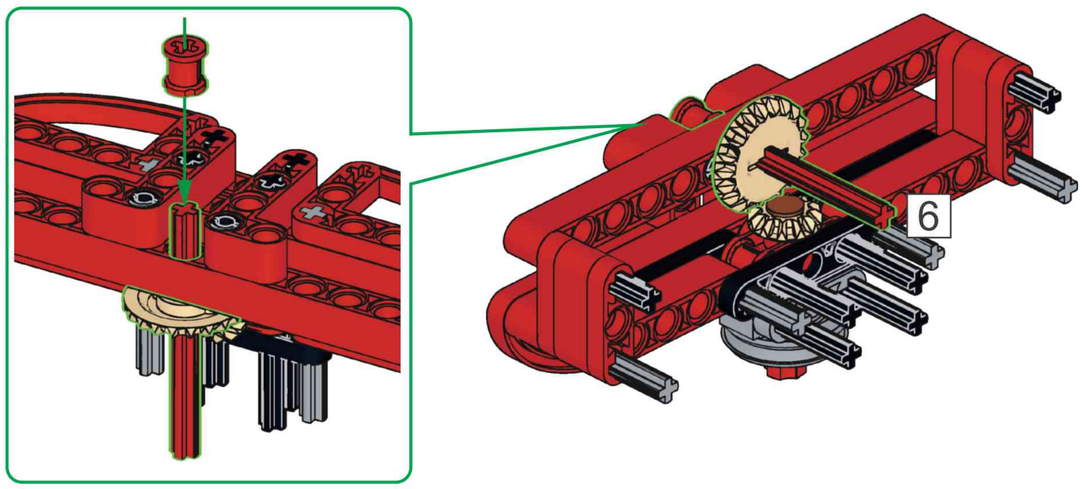

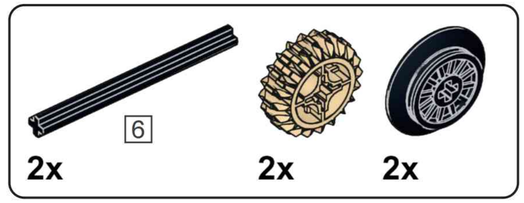

E15

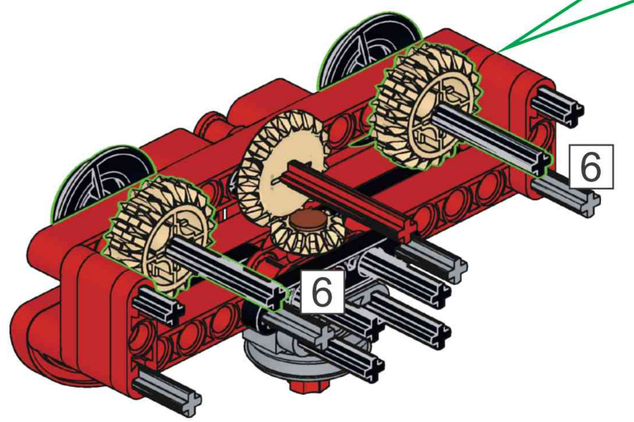

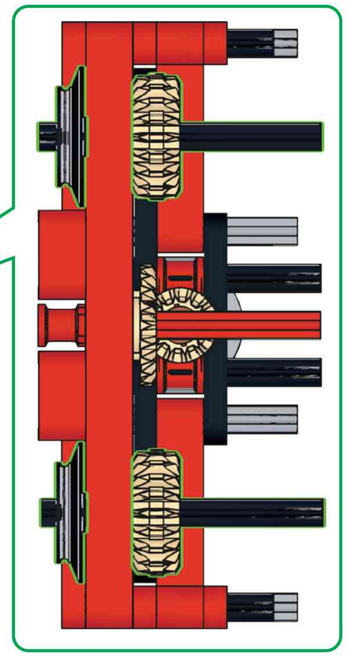

1x 2x 1x

E16

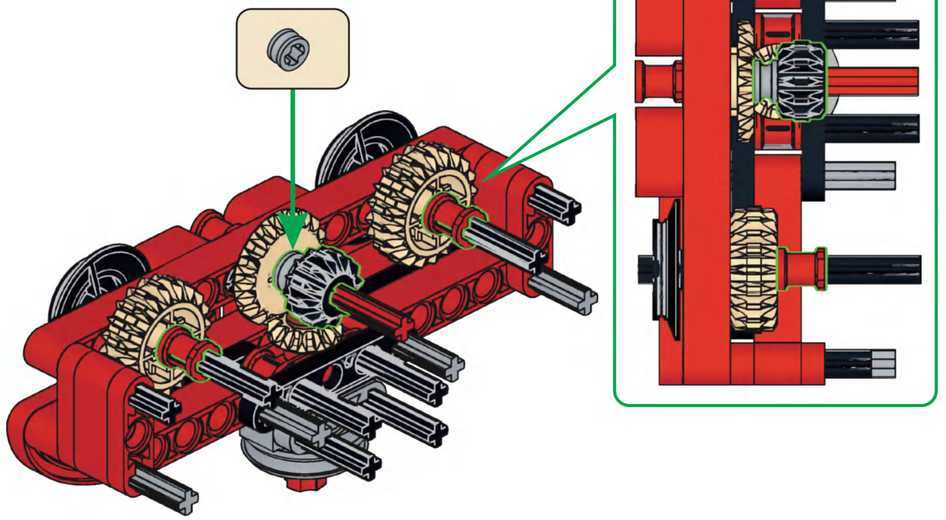

2x 2x 2x 6 2x

E17

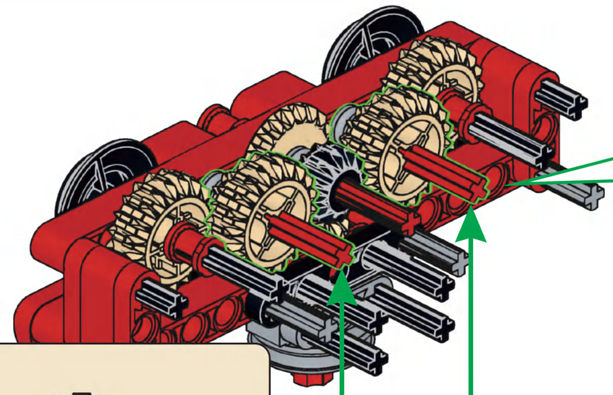

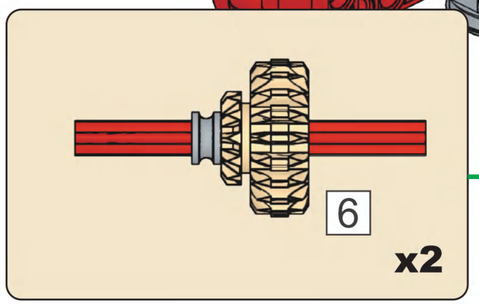

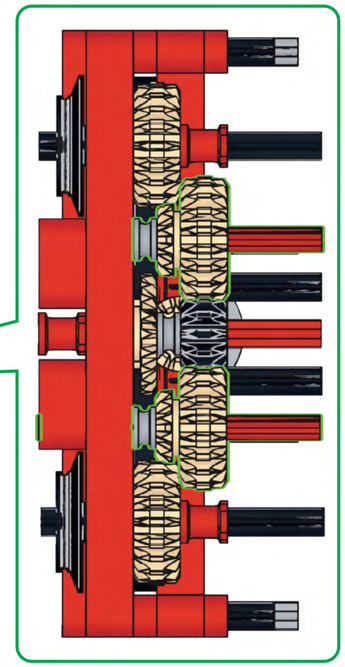

1x

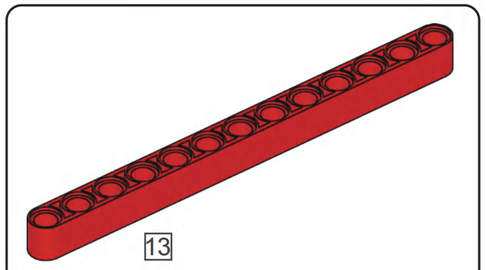

E18

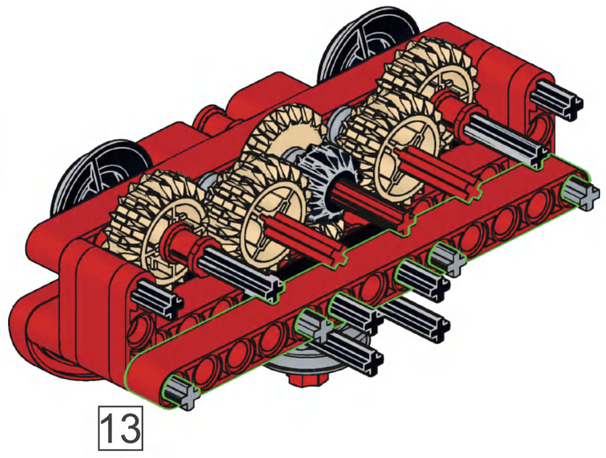

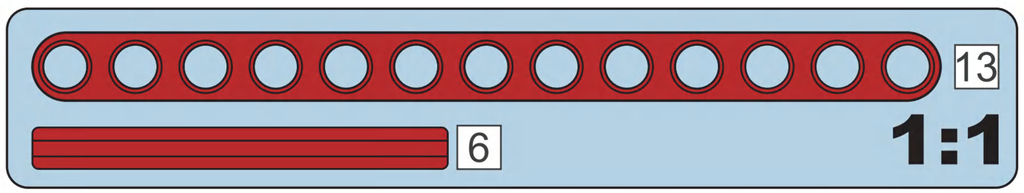

2x 1x

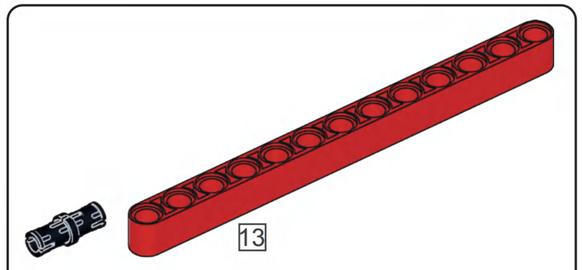

E19

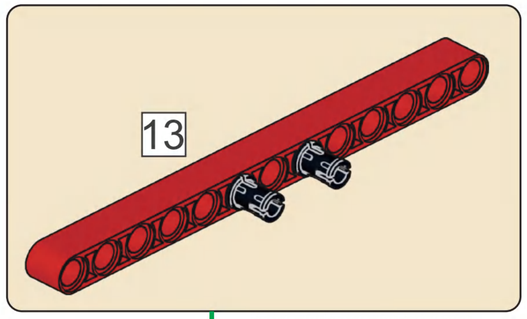

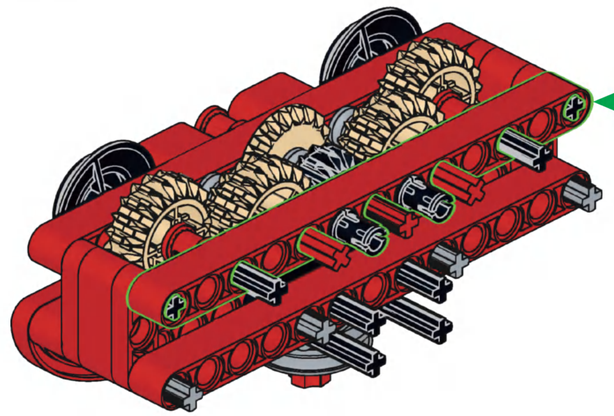

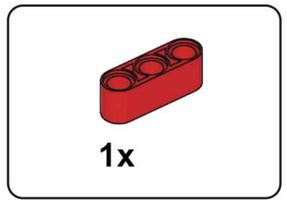

E20

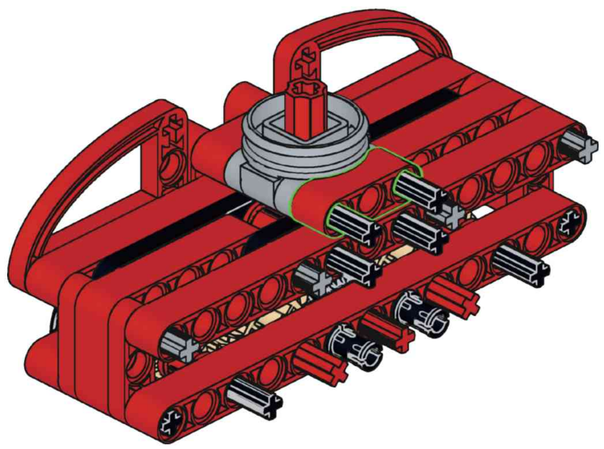

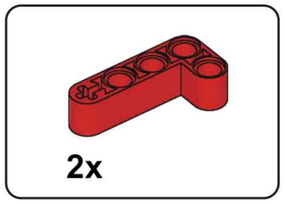

E21

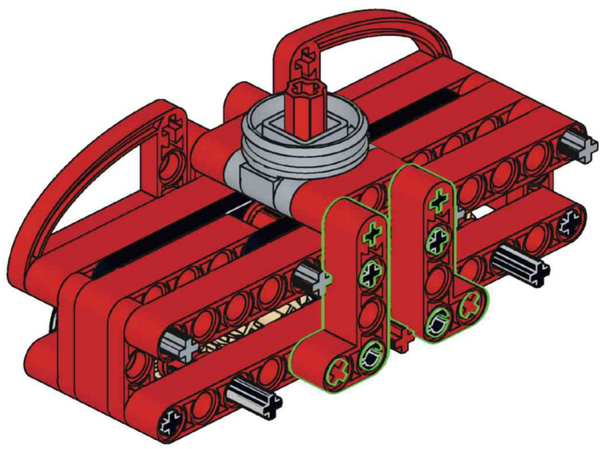

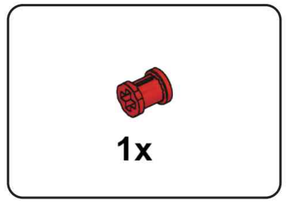

E22

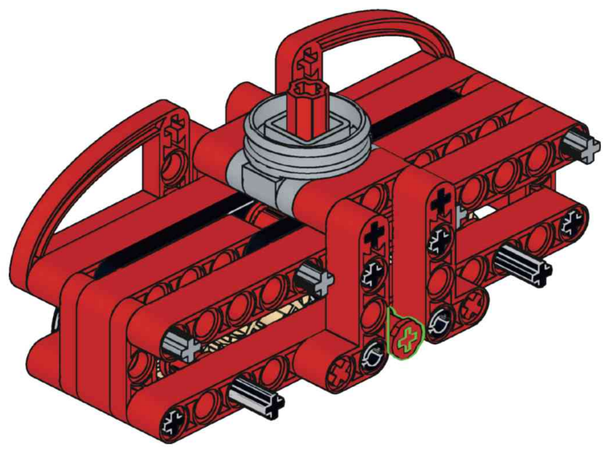

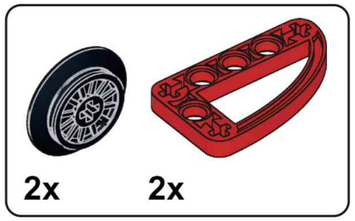

E23

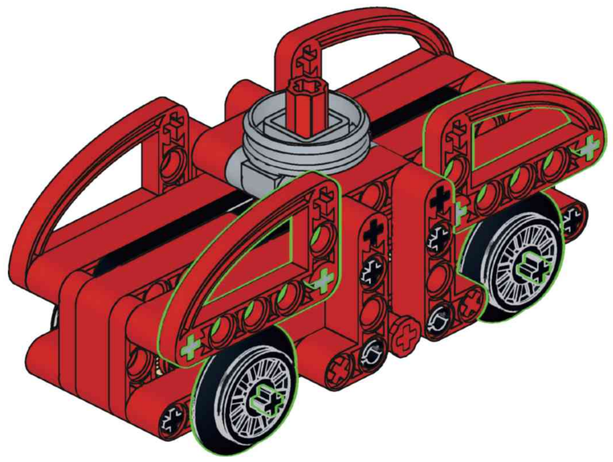

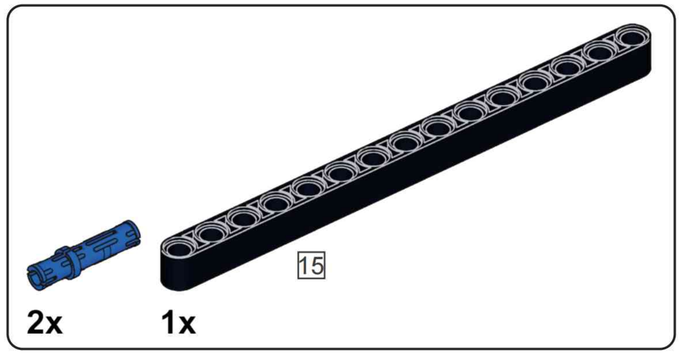

E24

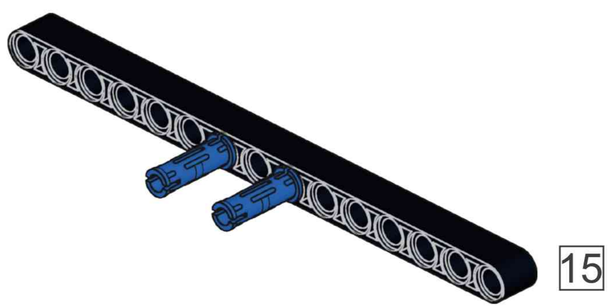

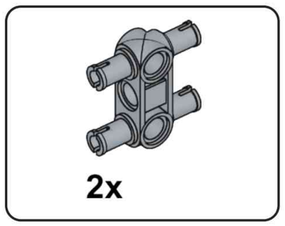

E25

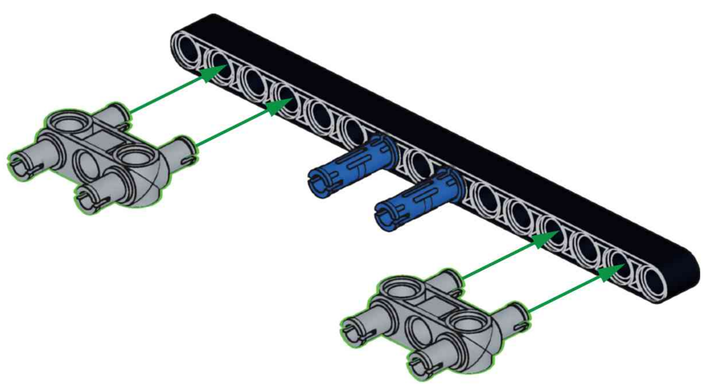

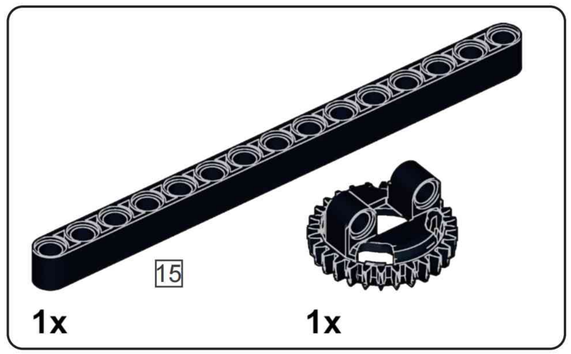

E26

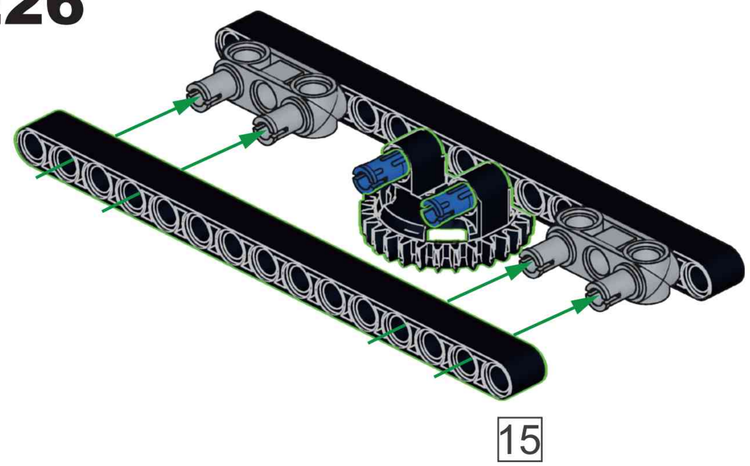

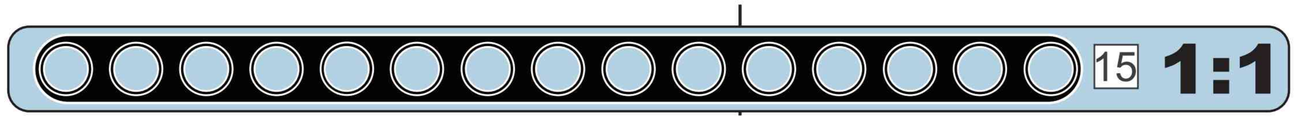

E27

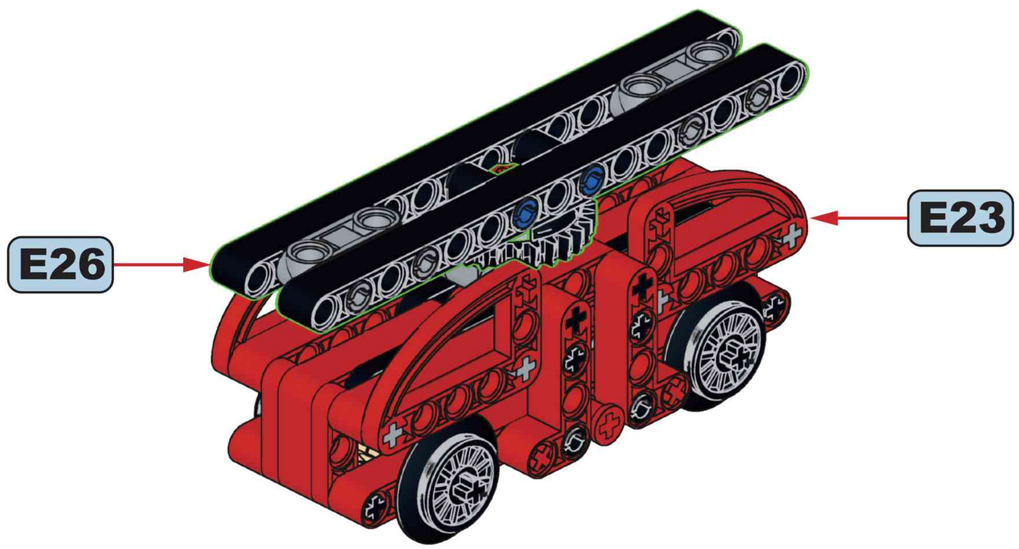

E28

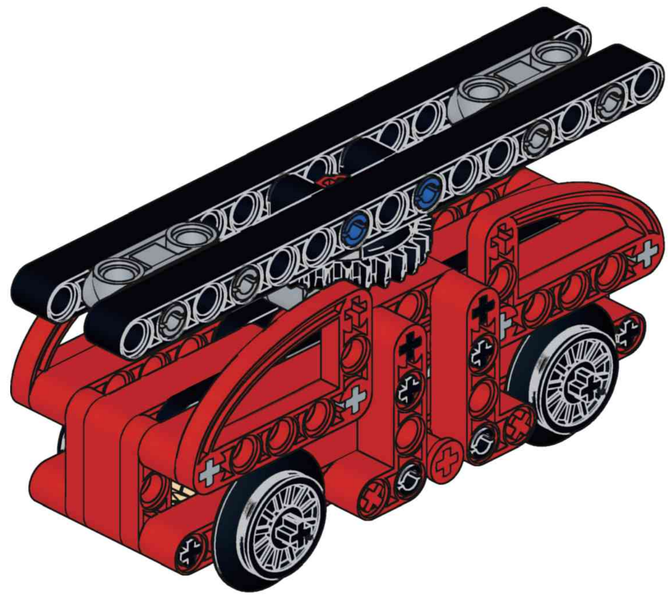

x4

6

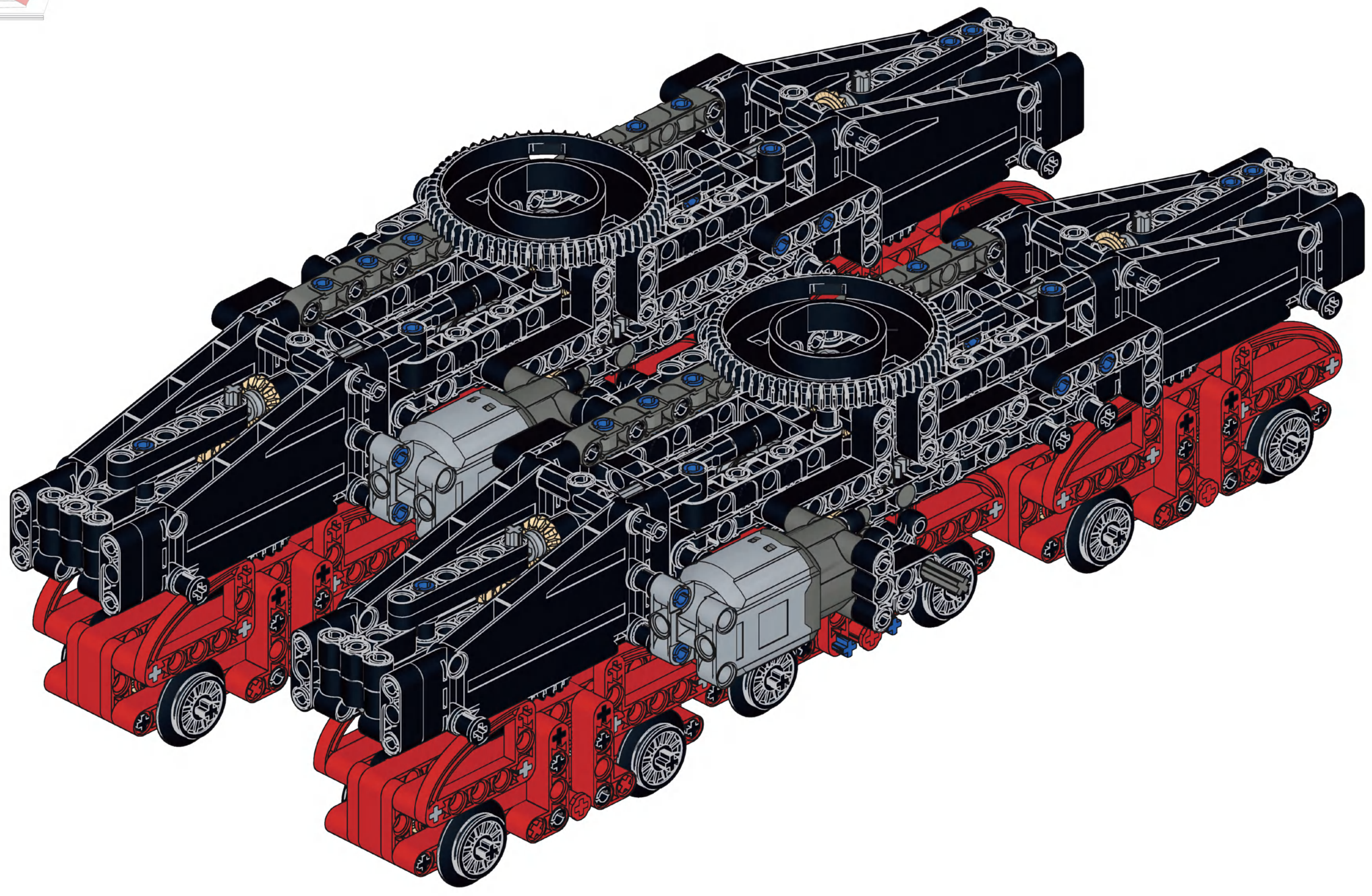

F

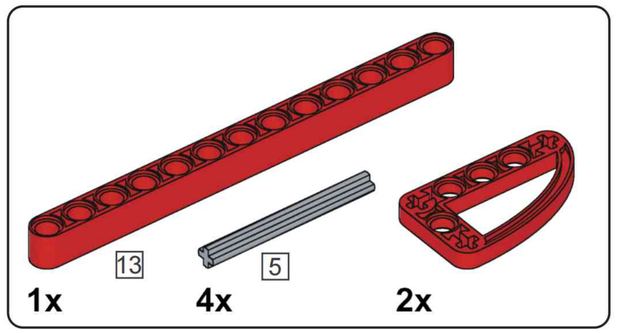

F1

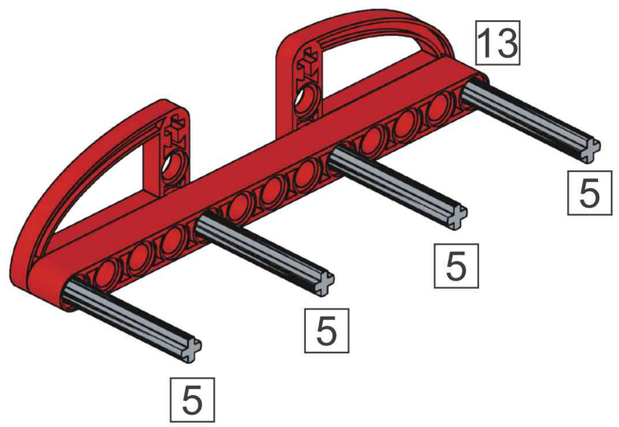

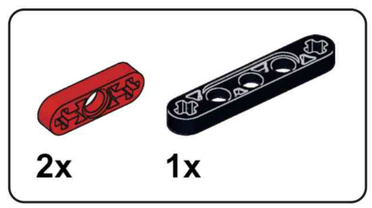

F2

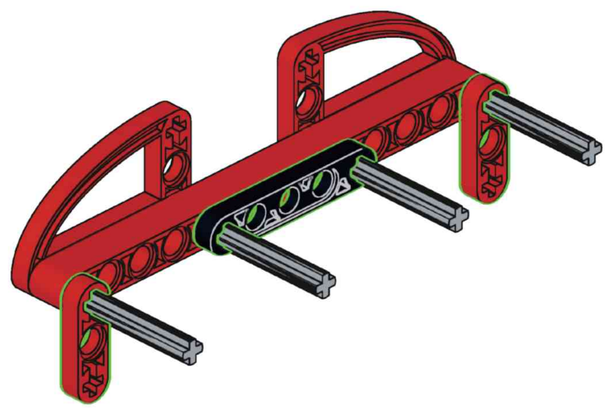

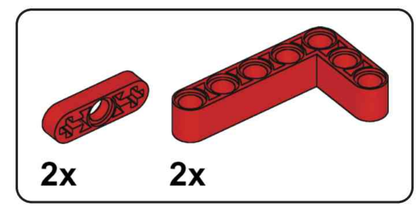

F3

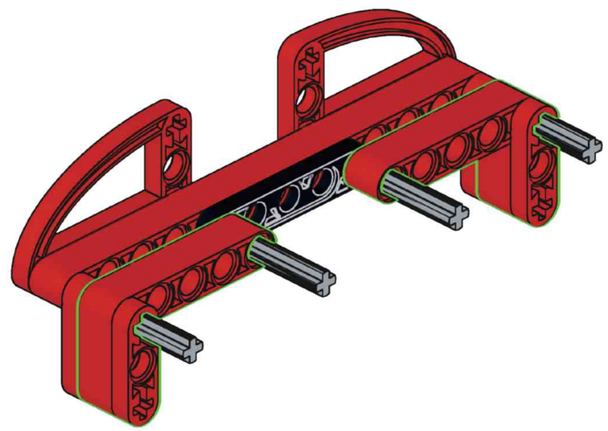

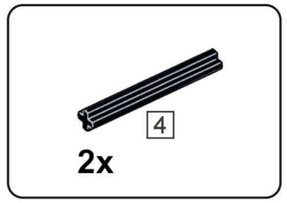

F4

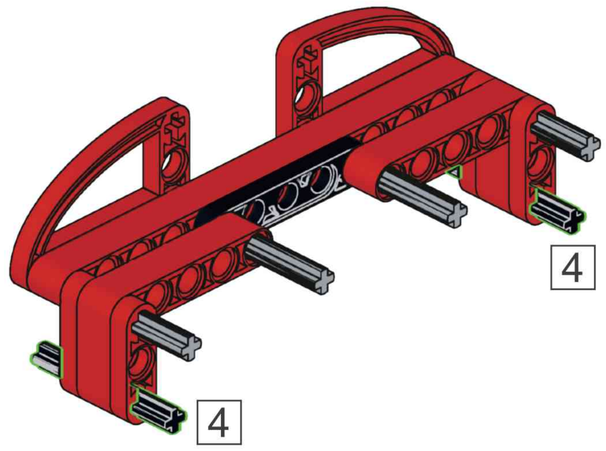

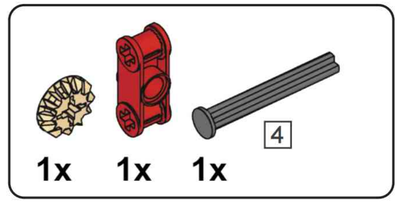

F5

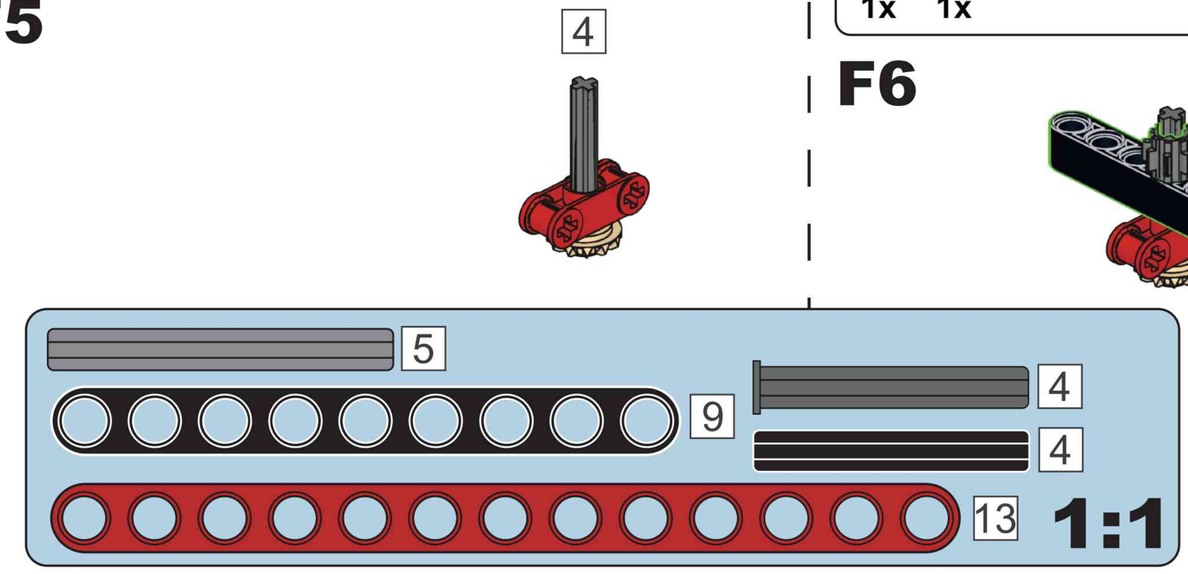

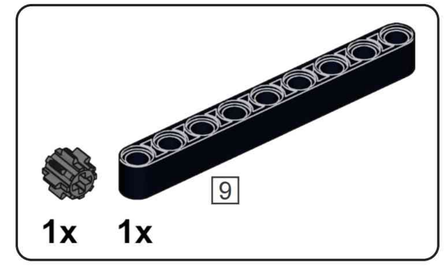

F6

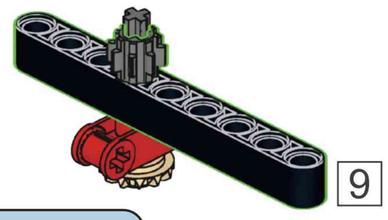

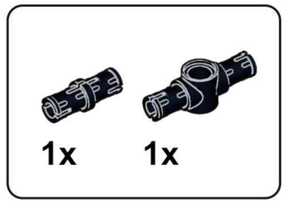

F7

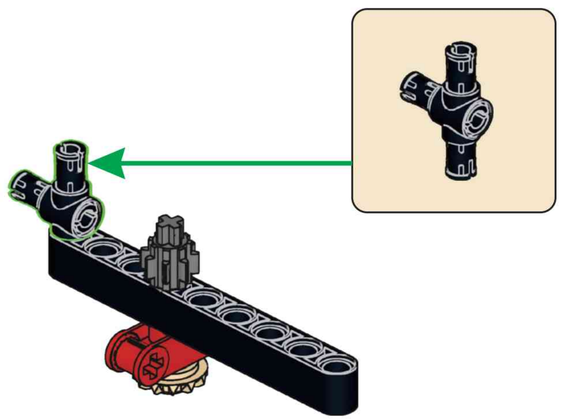

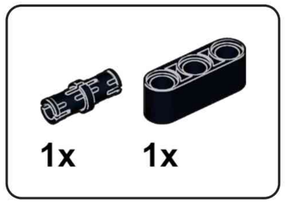

F8



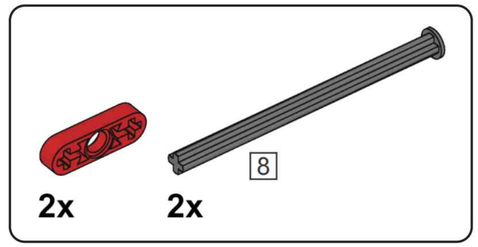

F9

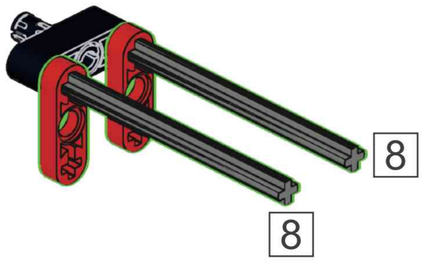

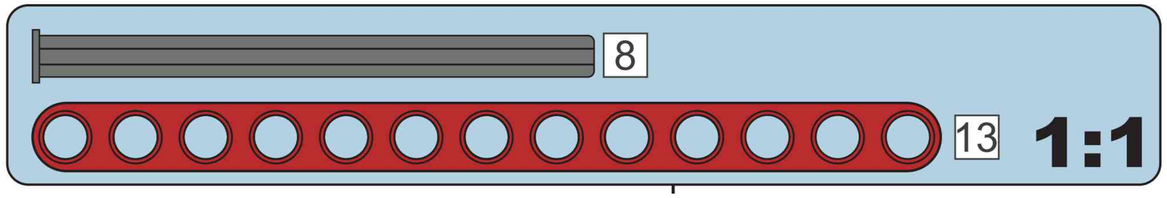

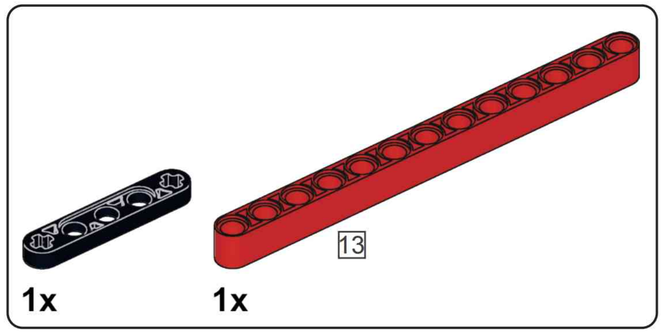

F10

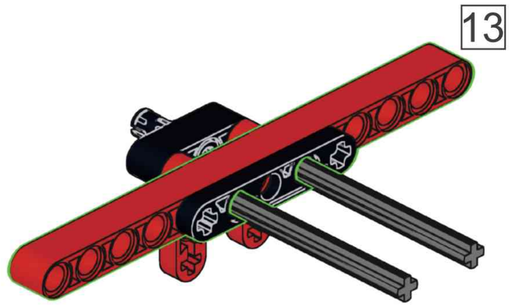

F11

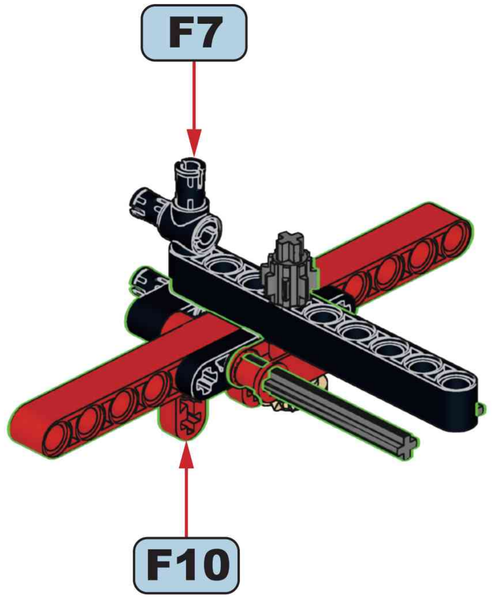

1x

F12

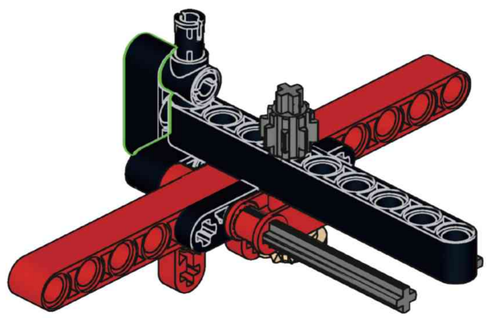

2x 1x

13

F13

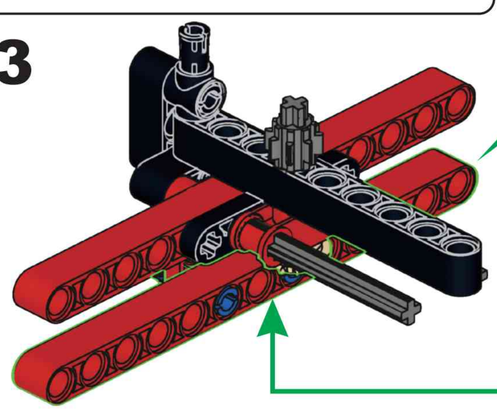

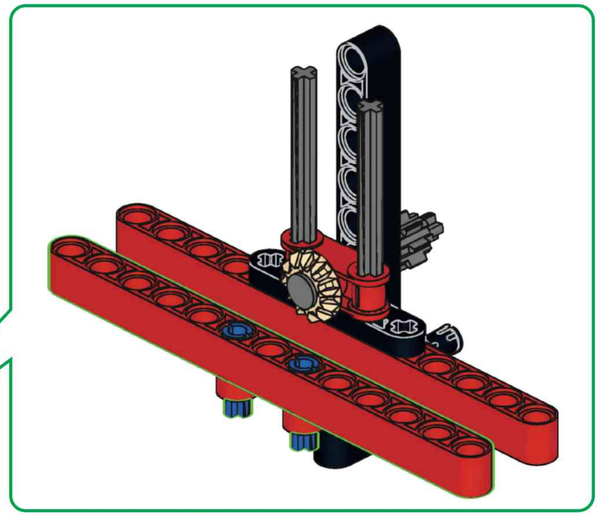

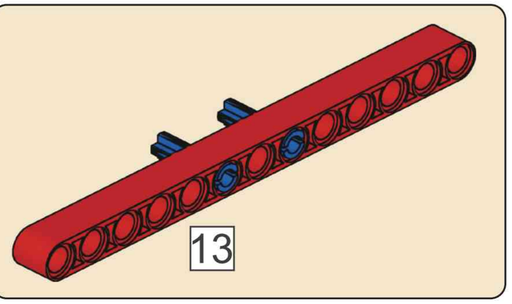

13

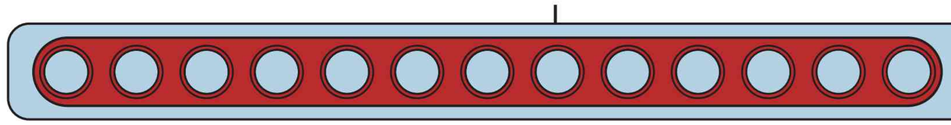

13 **1:1**

1x

F14

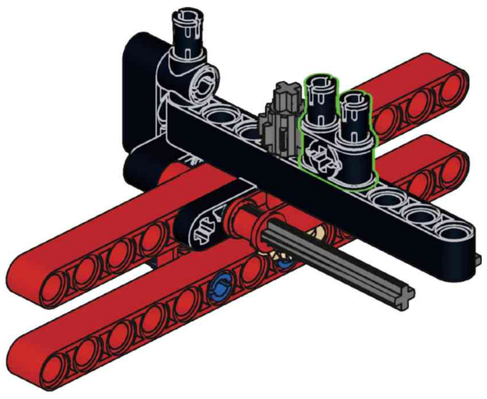

F15

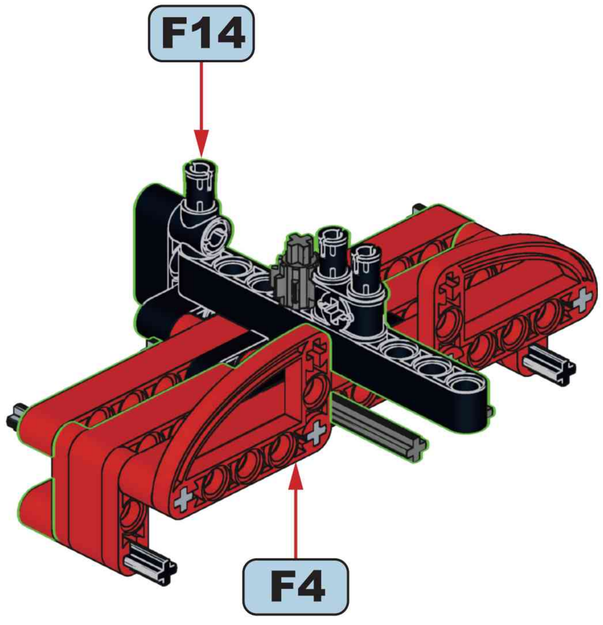

2x 1x

13

F16

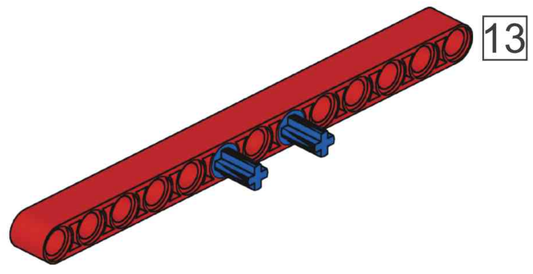

13

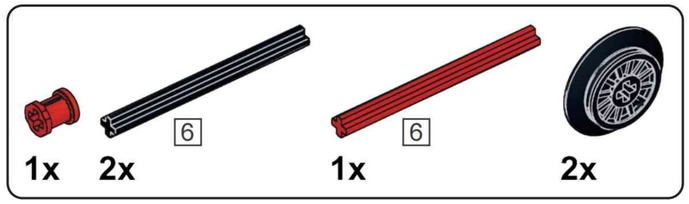

F17

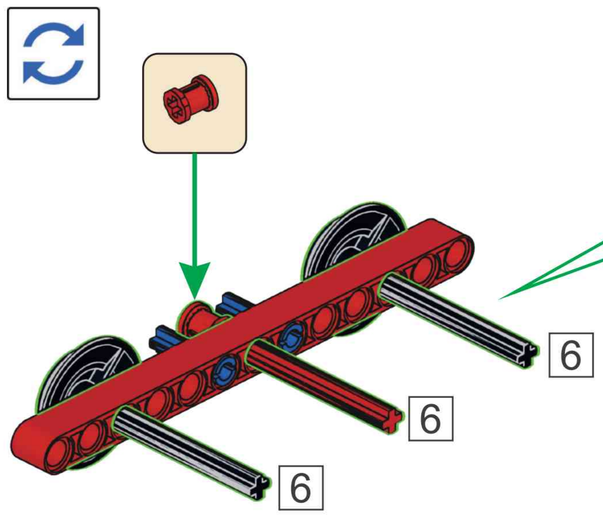

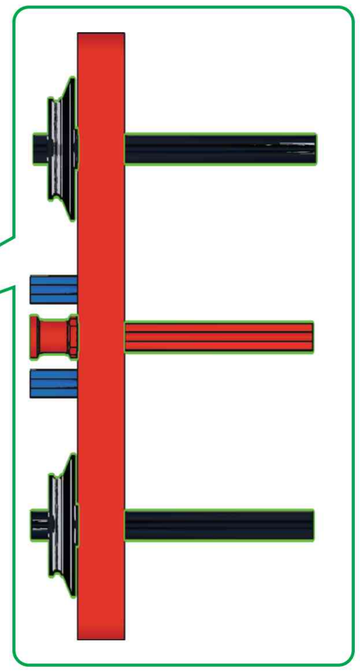

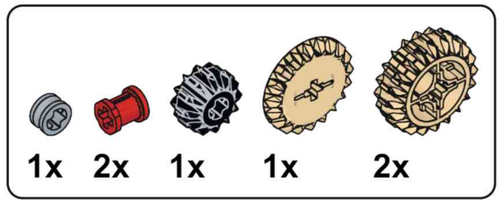

F18



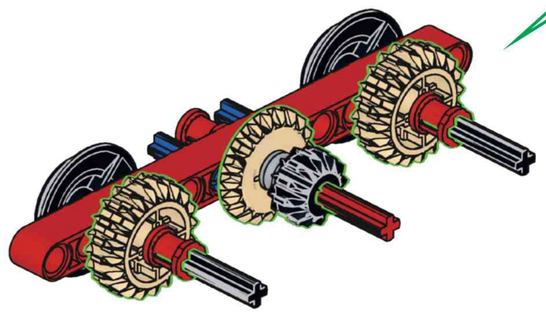

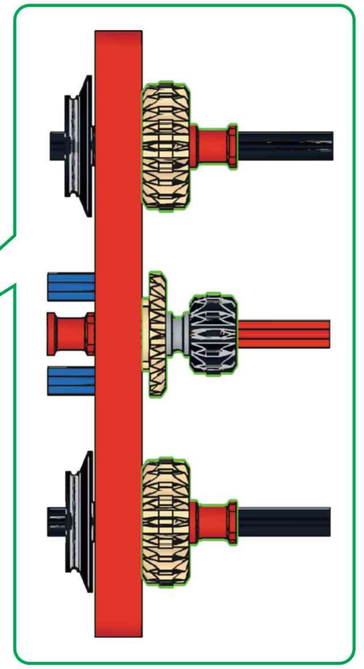

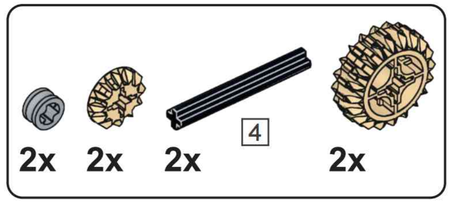

F19

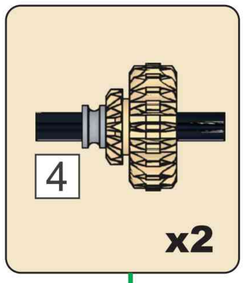

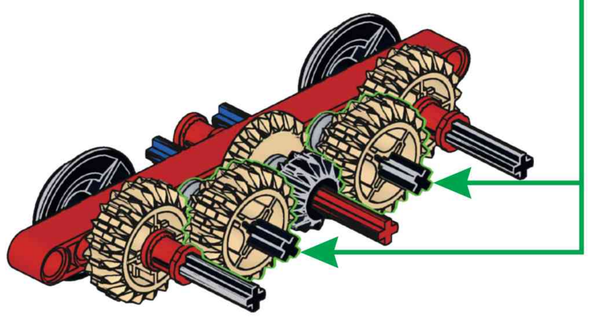

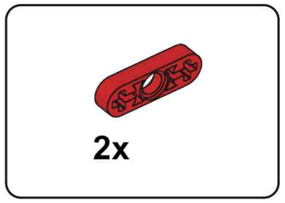

F20

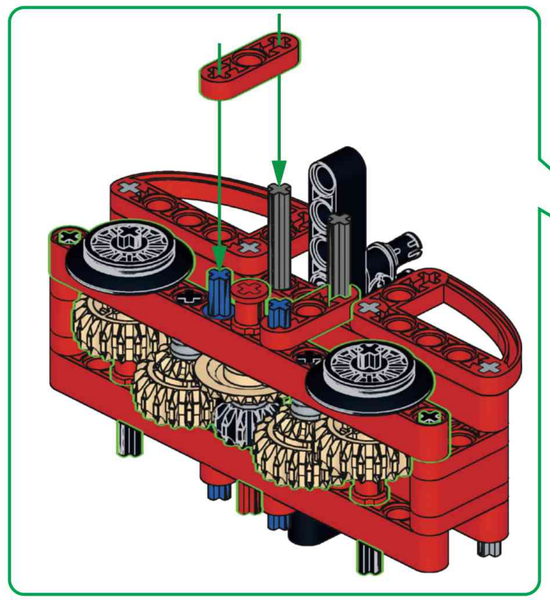

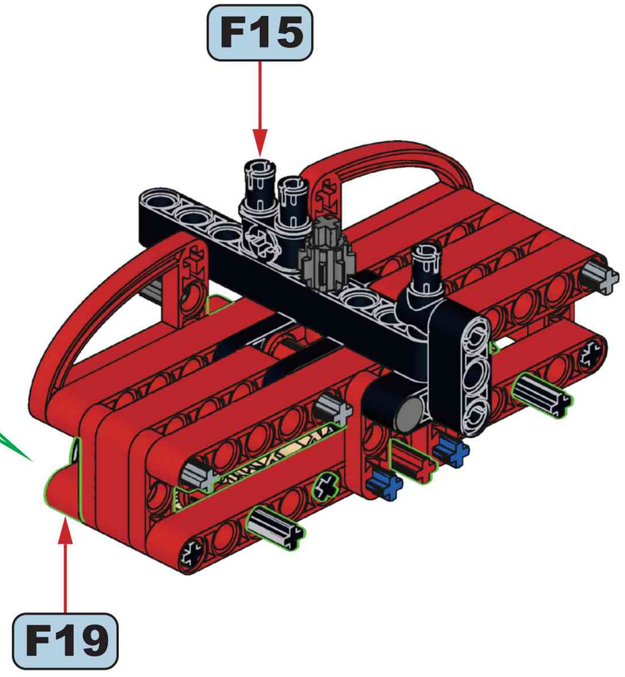

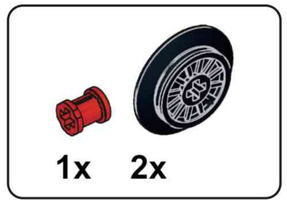

F21

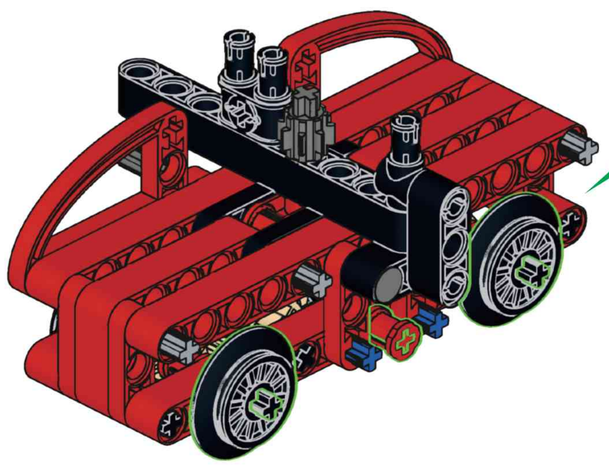

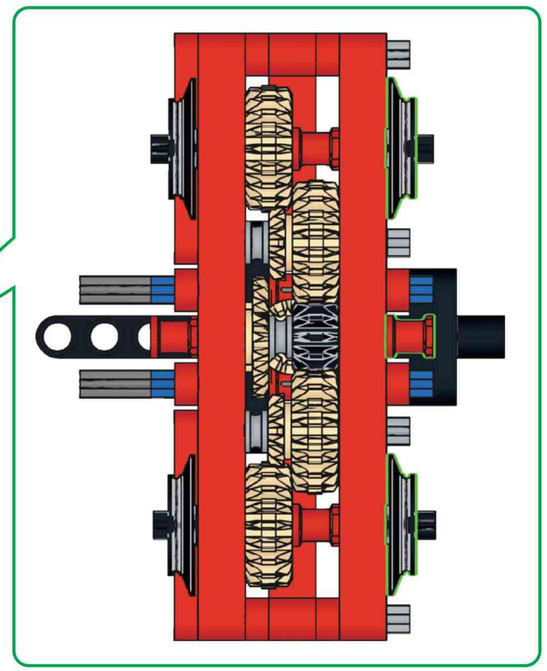

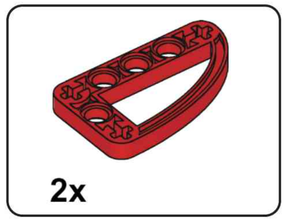

F22

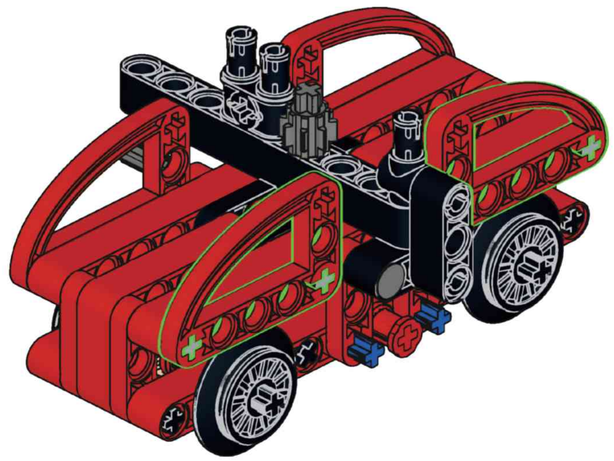

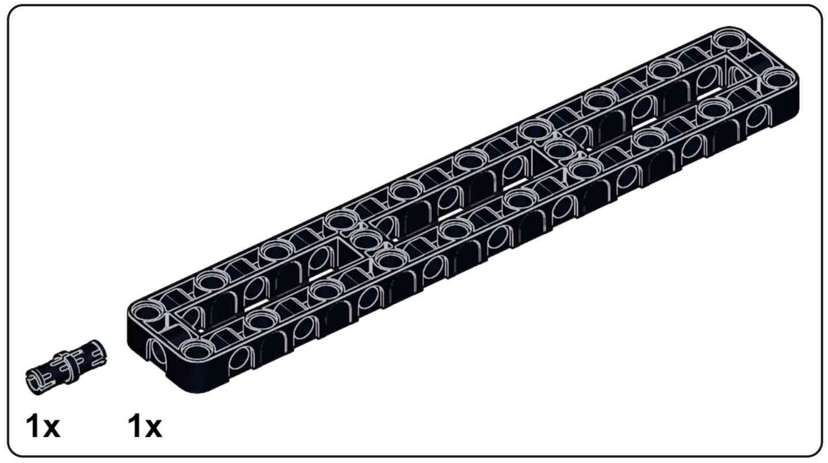

F23

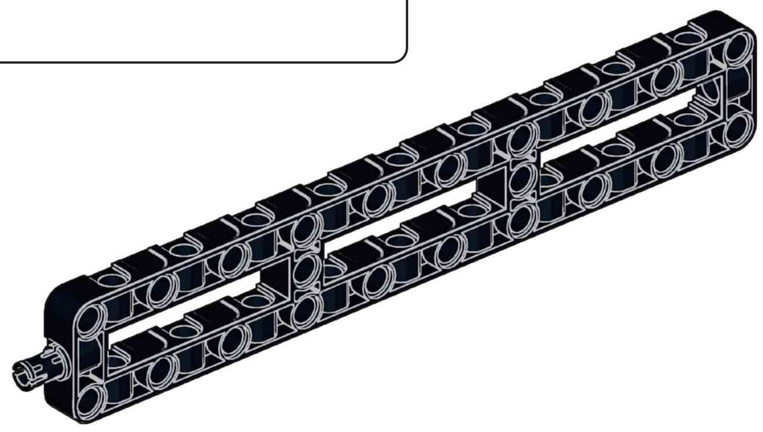

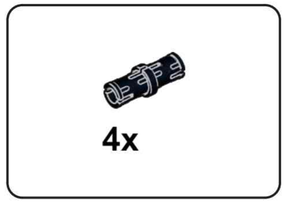

F24

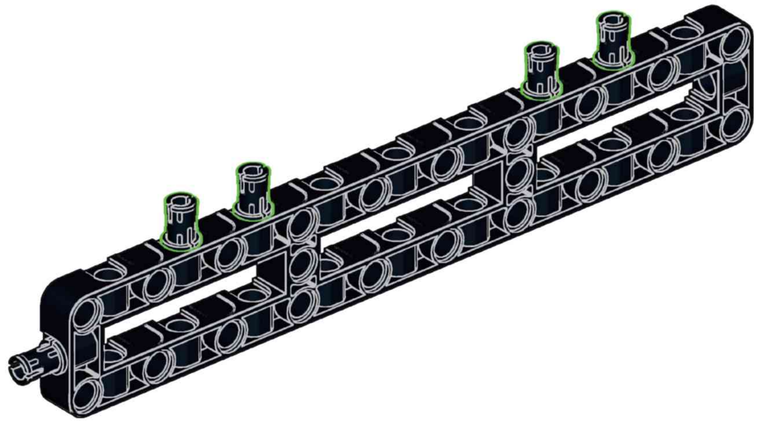

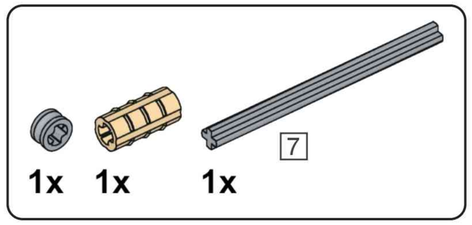

F25

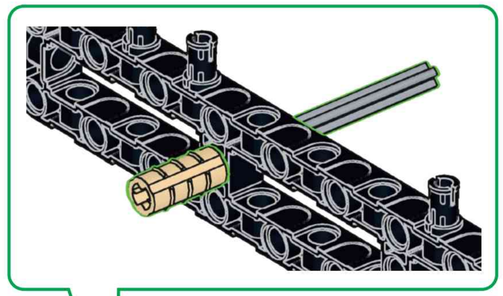

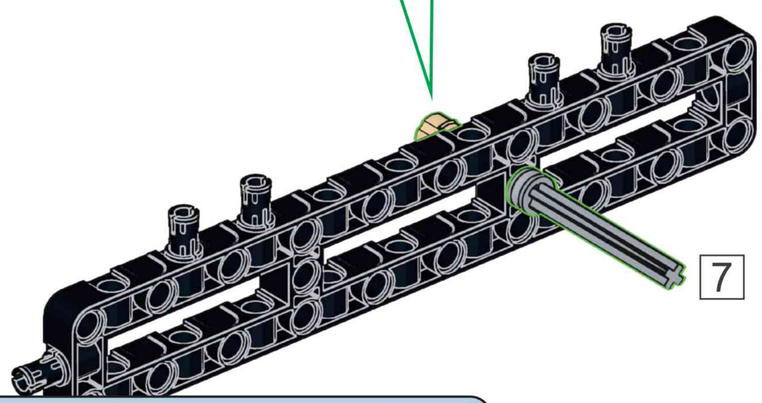

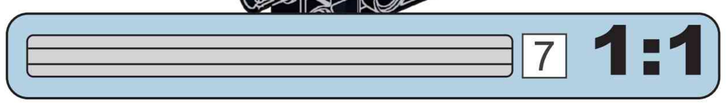

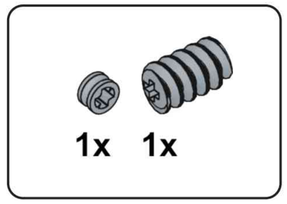

F26

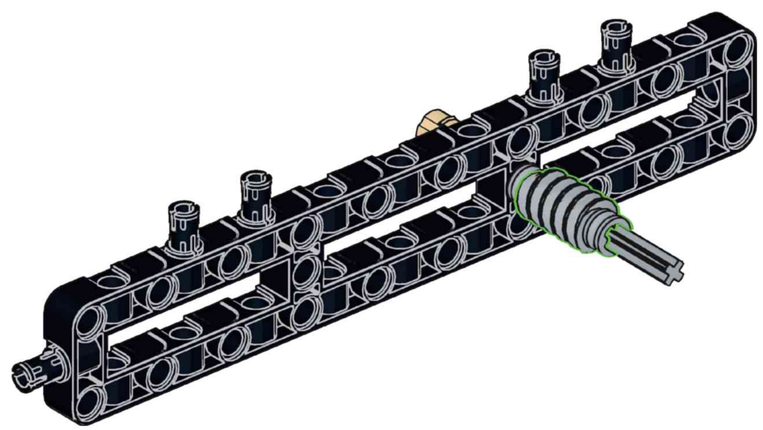

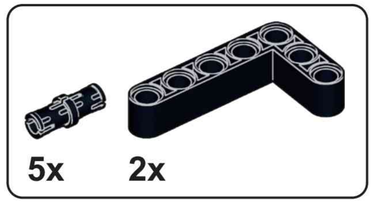

F27

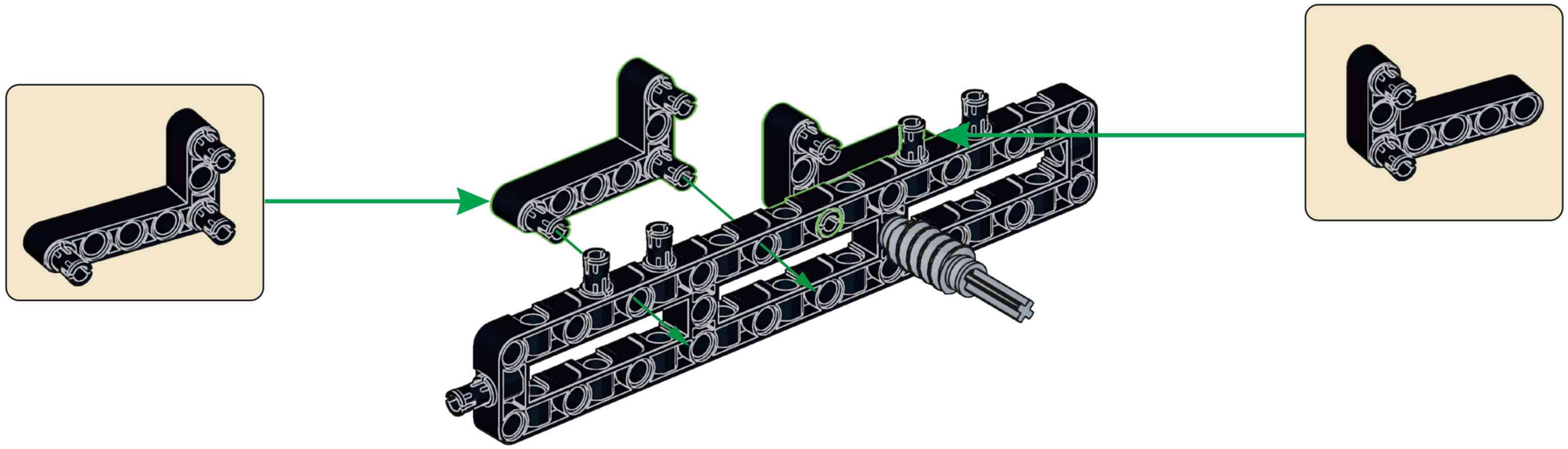

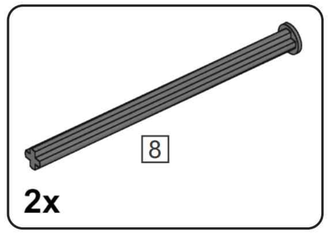

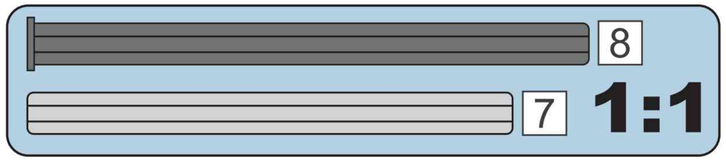

F28

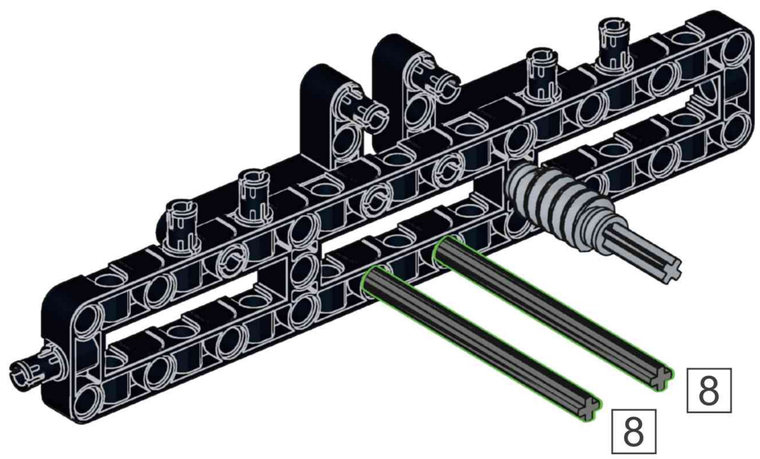

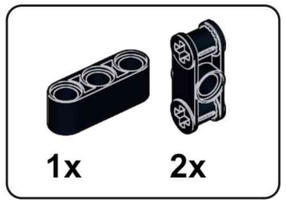

F29

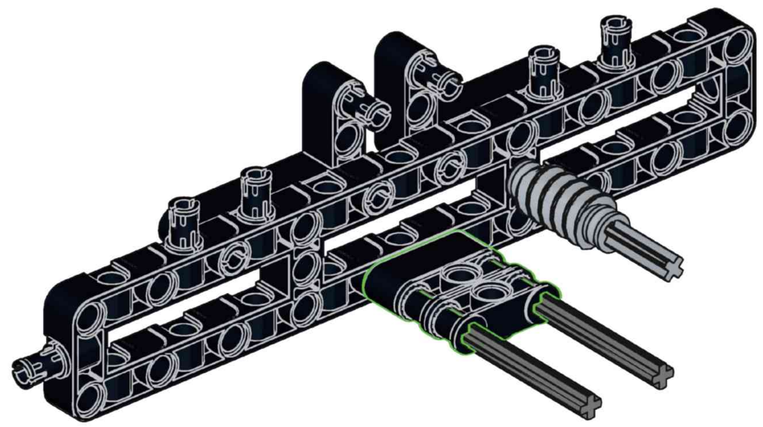

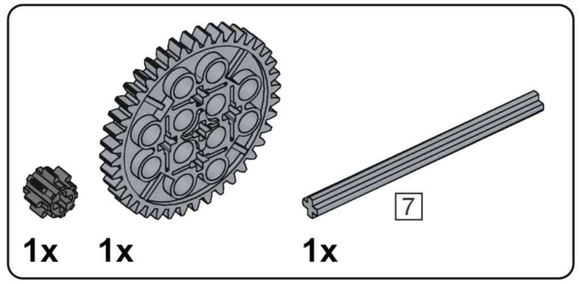

F30

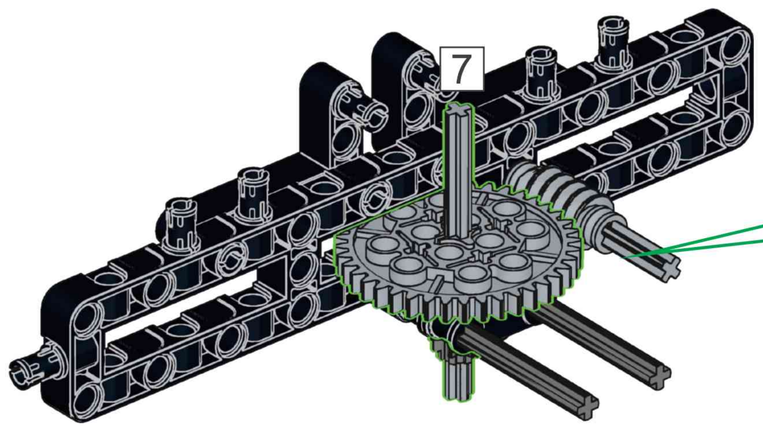

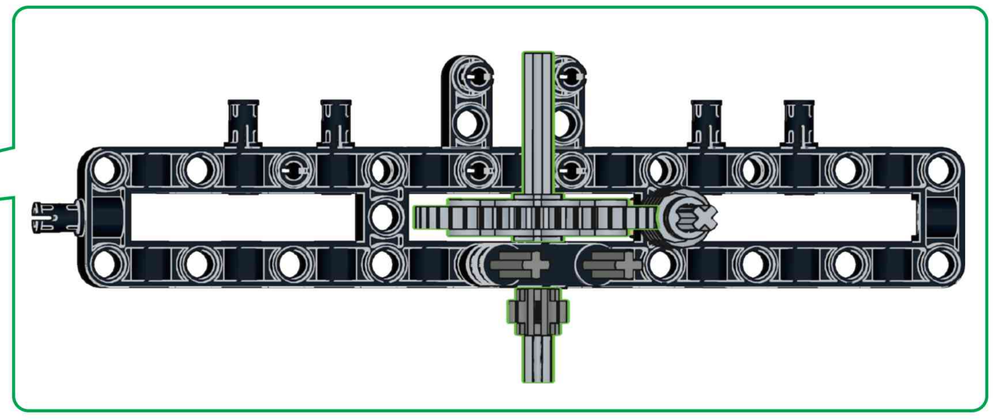

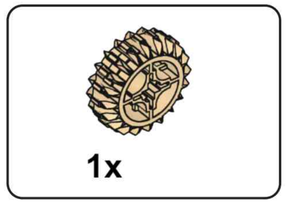

F31

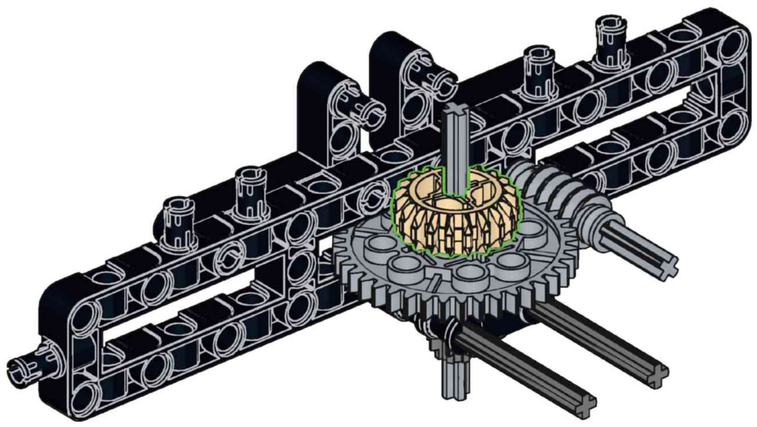

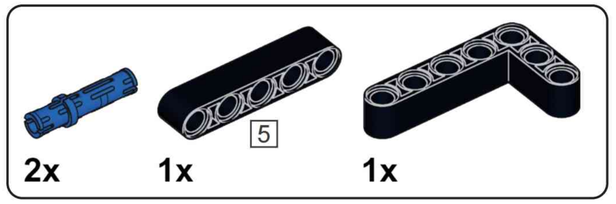

F32

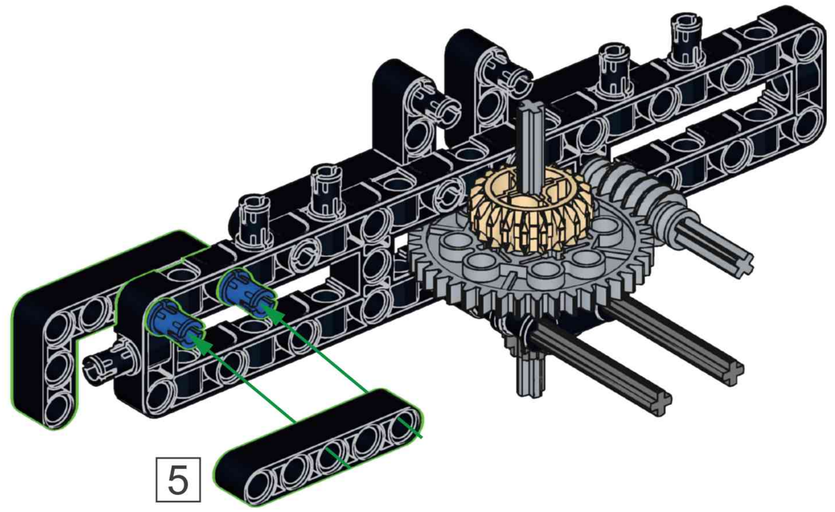

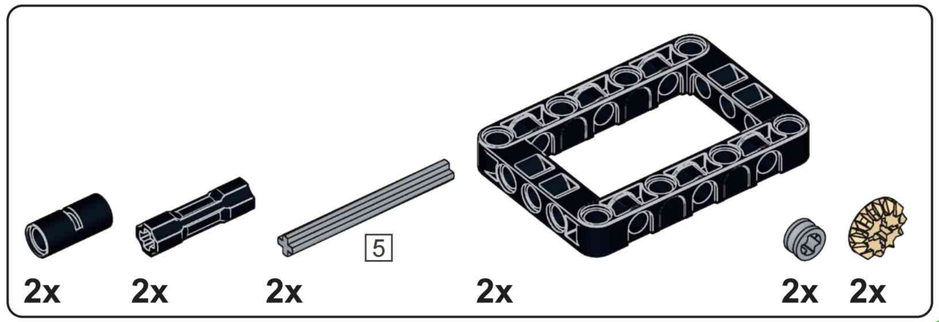

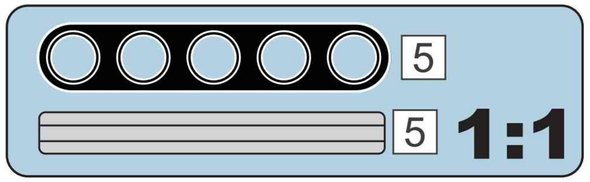

F33

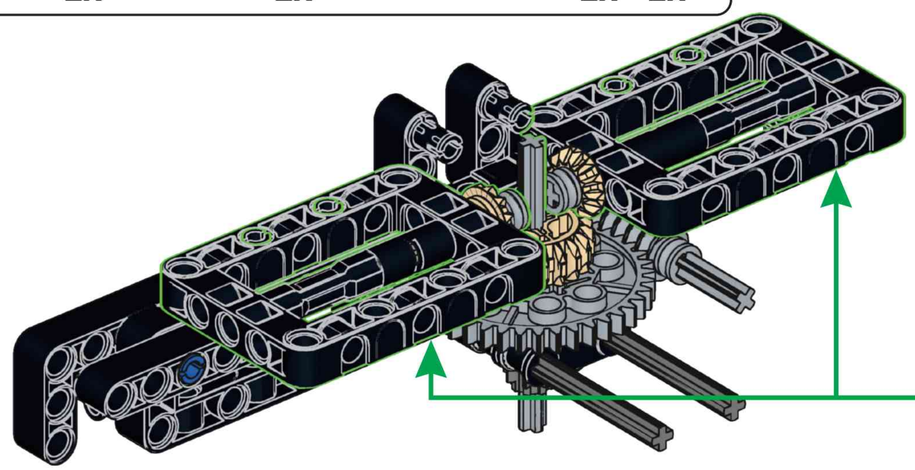

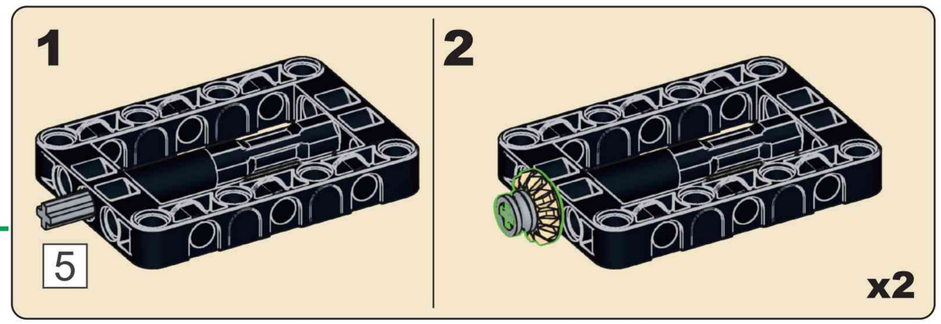

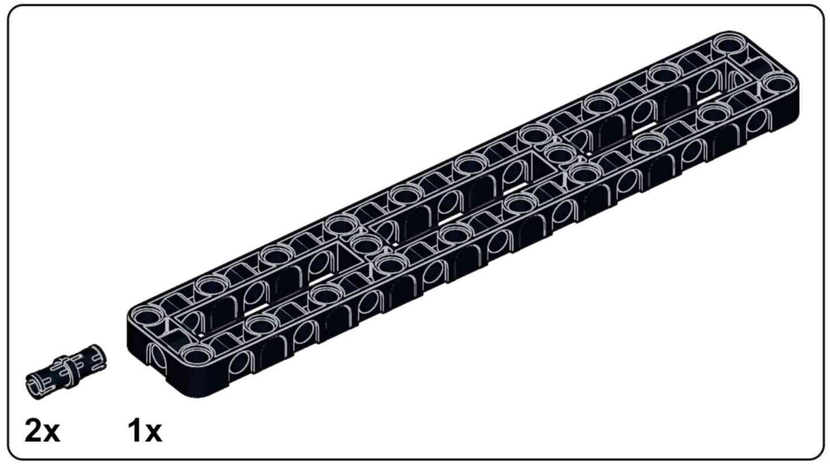

F34

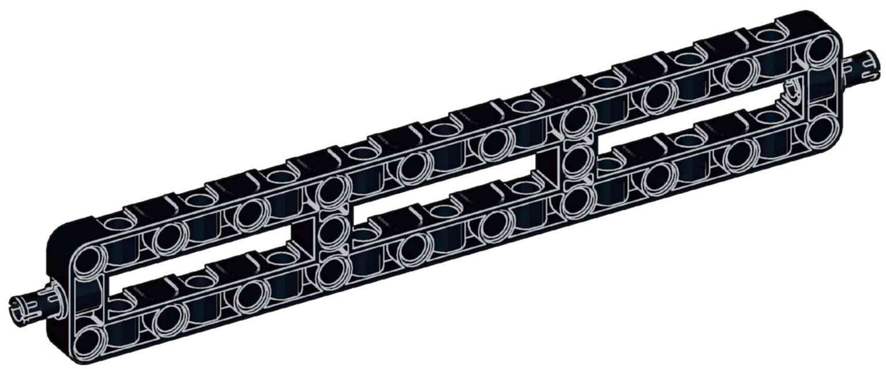

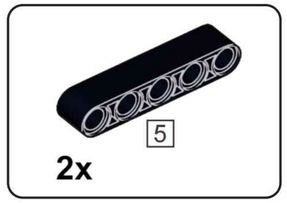

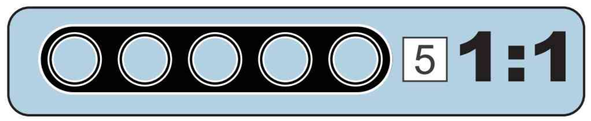

F36

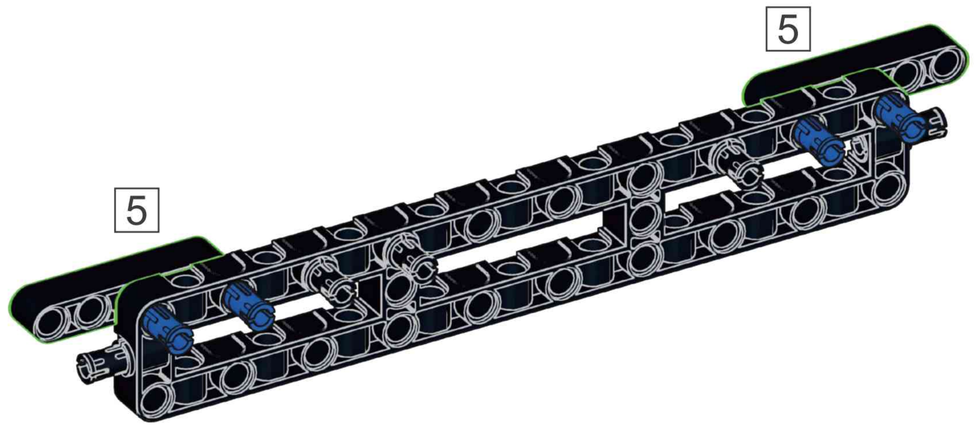

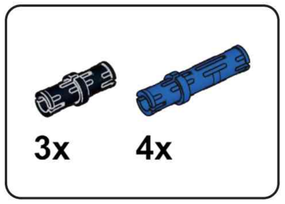

F35

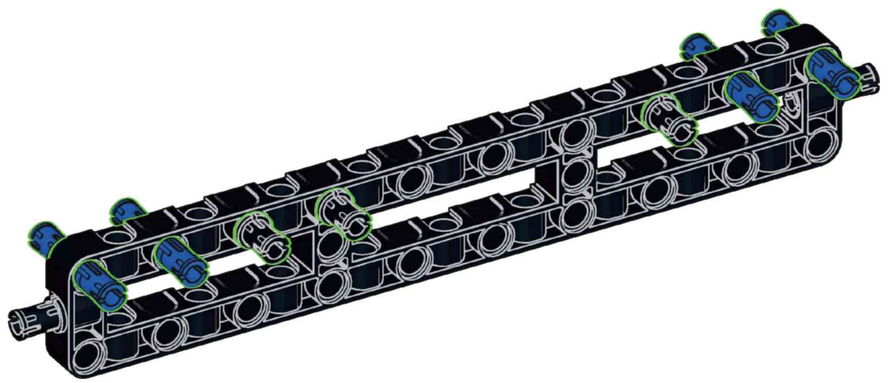

F37

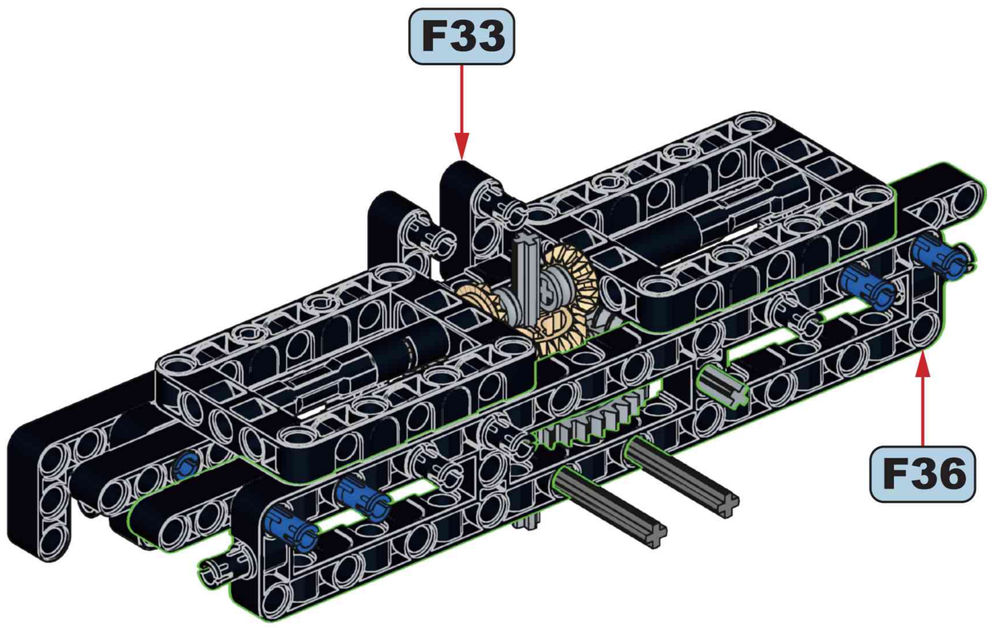

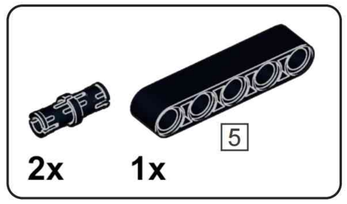

F38

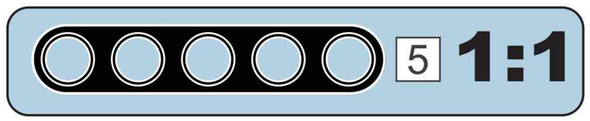

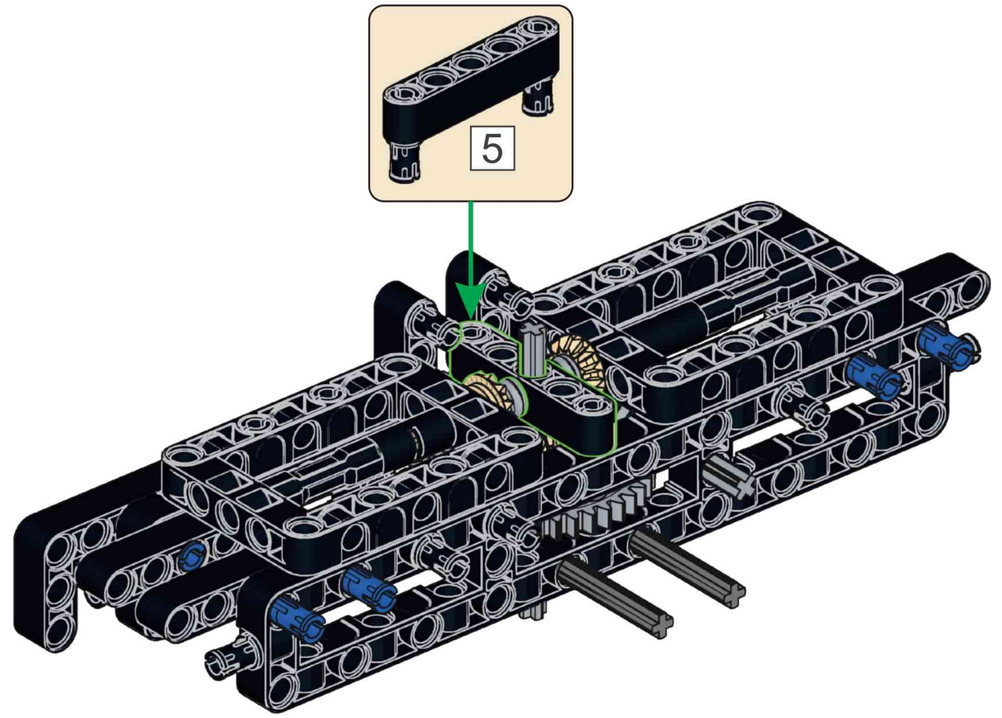

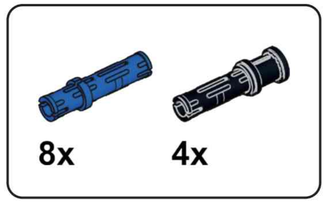

F39

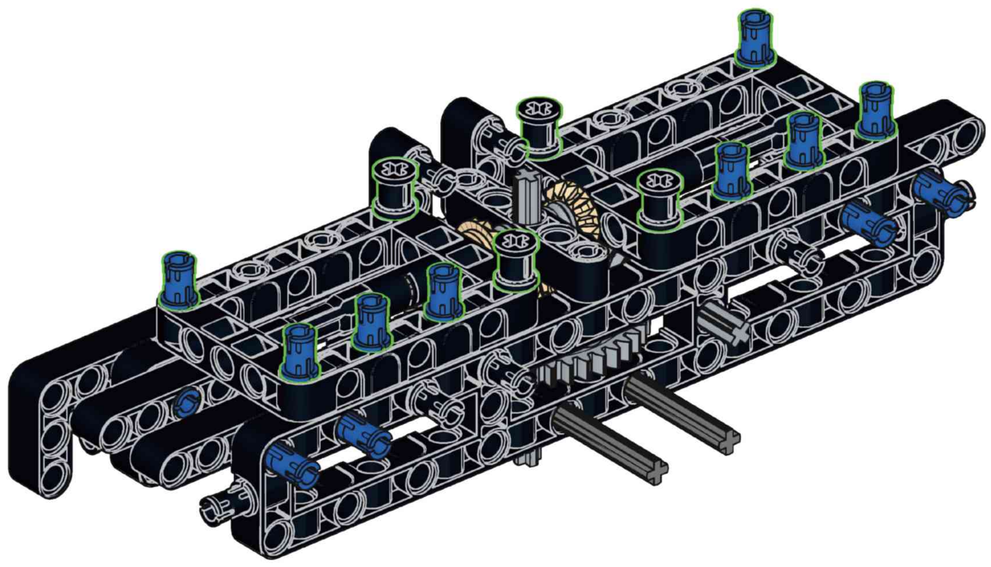

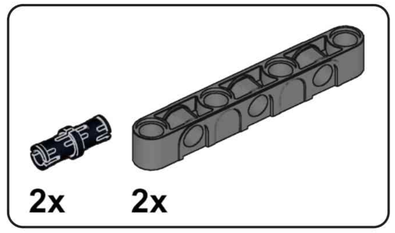

F40

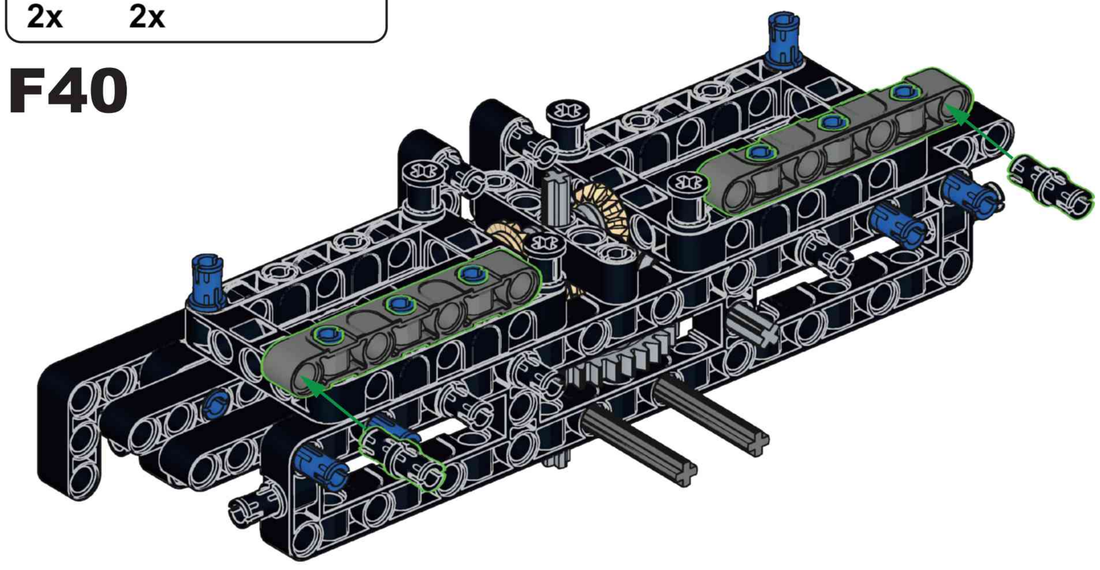

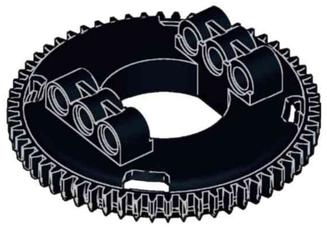

1x

F41

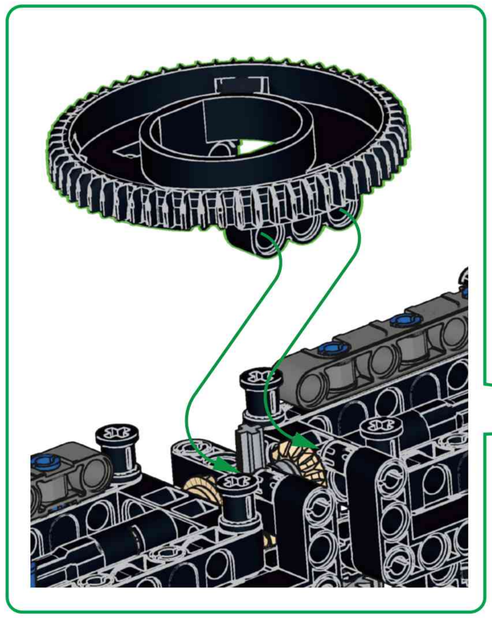

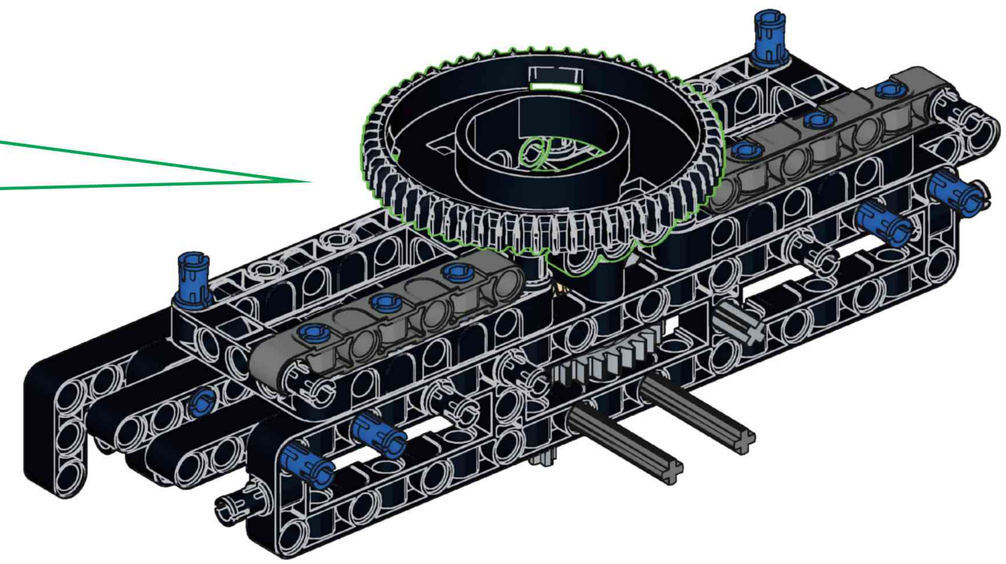



1x

F42

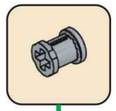

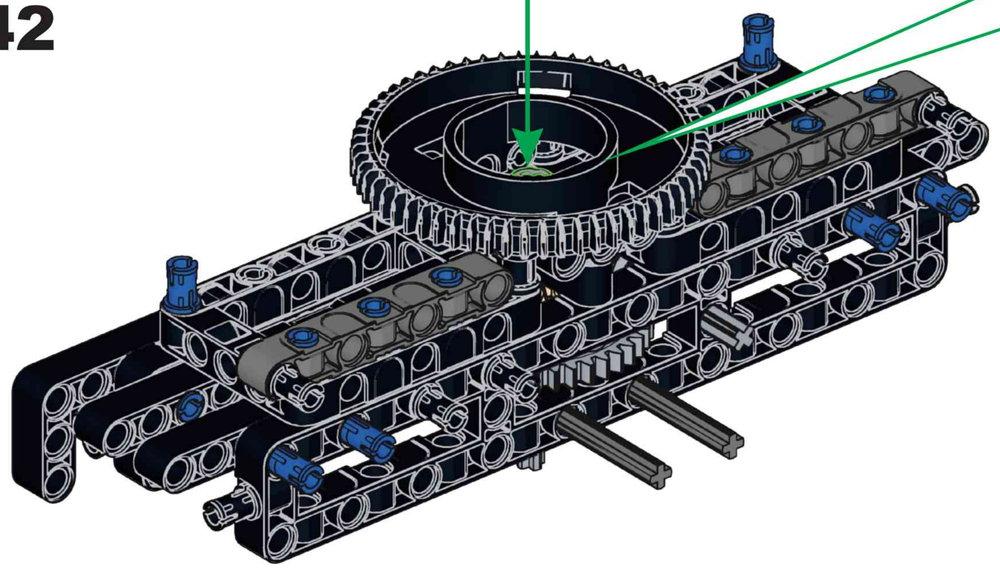

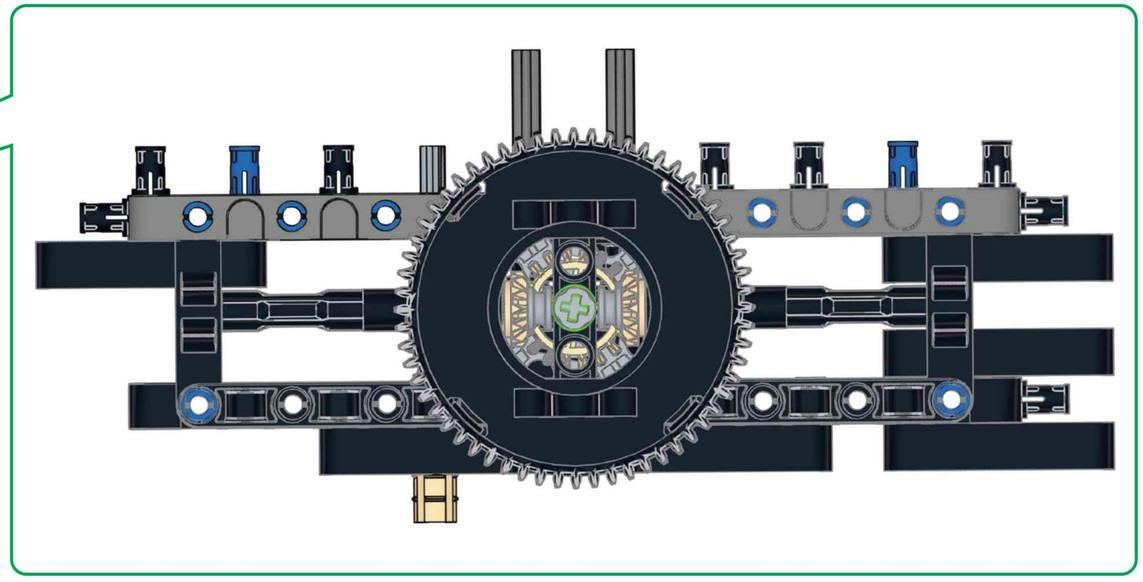

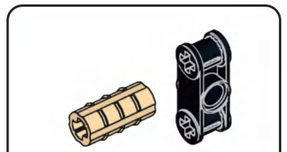

F43

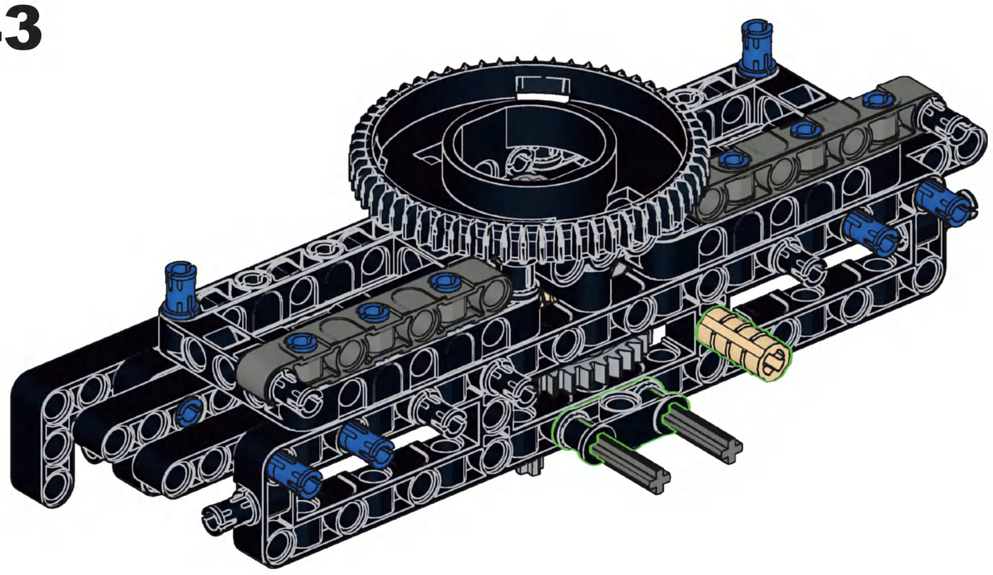

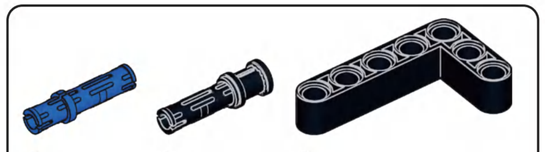

F44

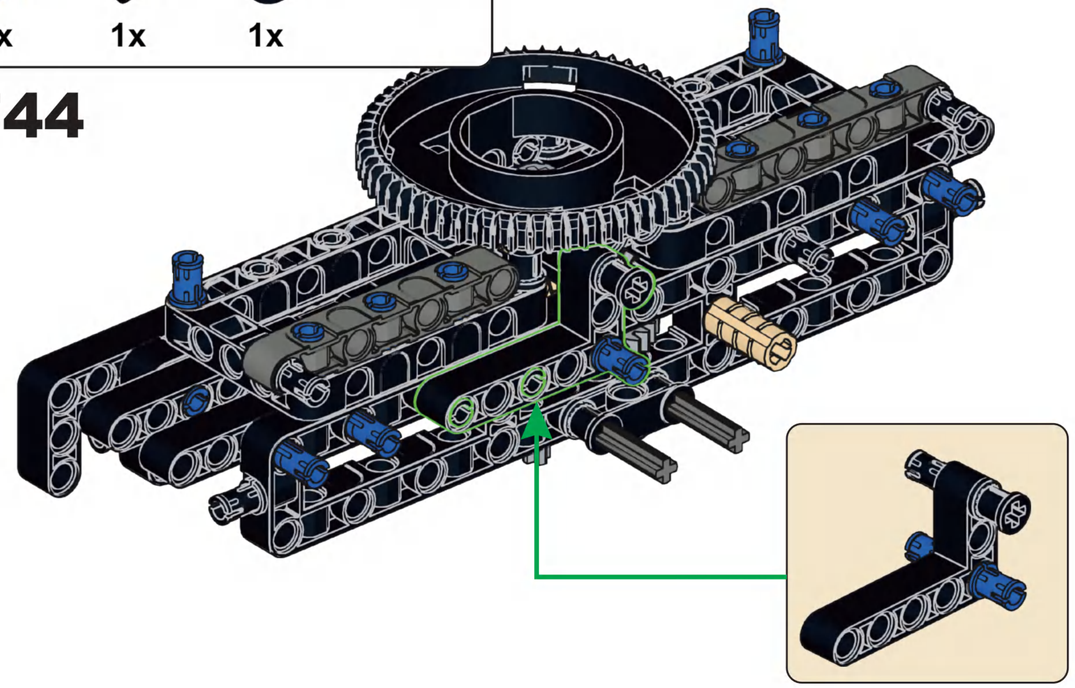

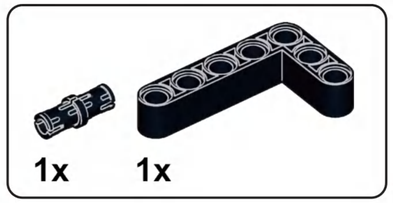

F45

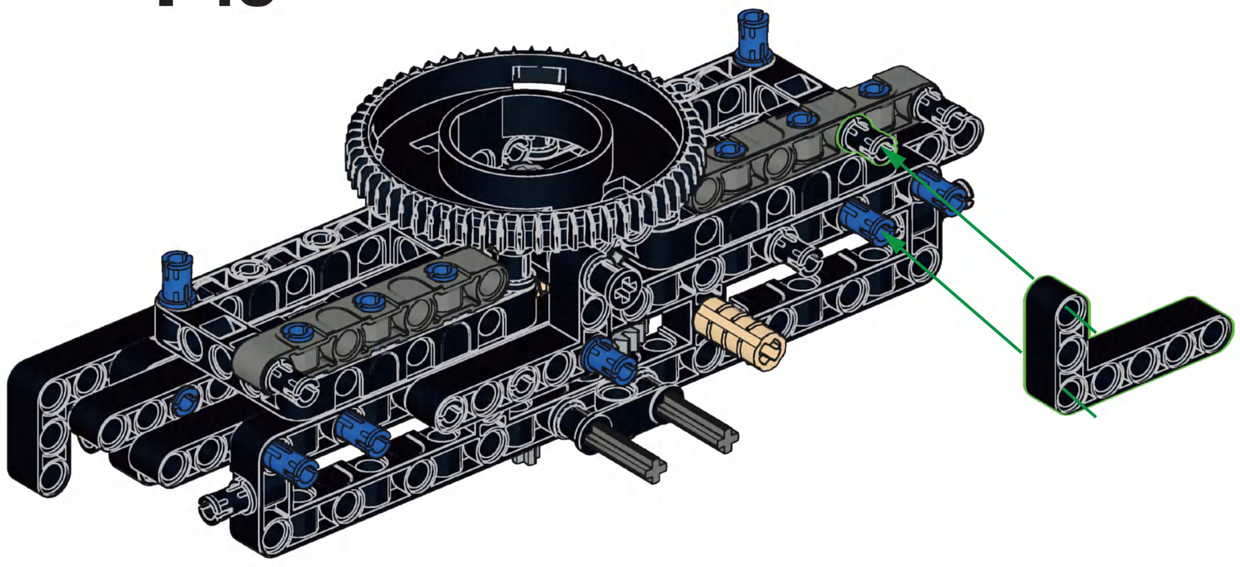

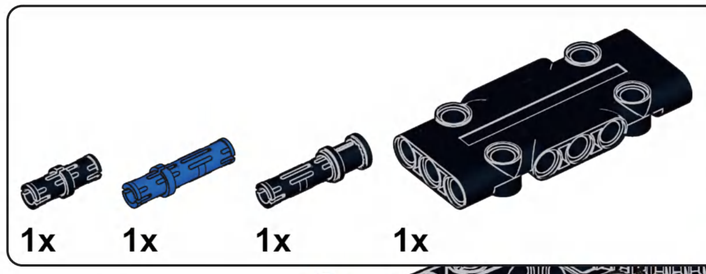

F46

2x 2x

F47

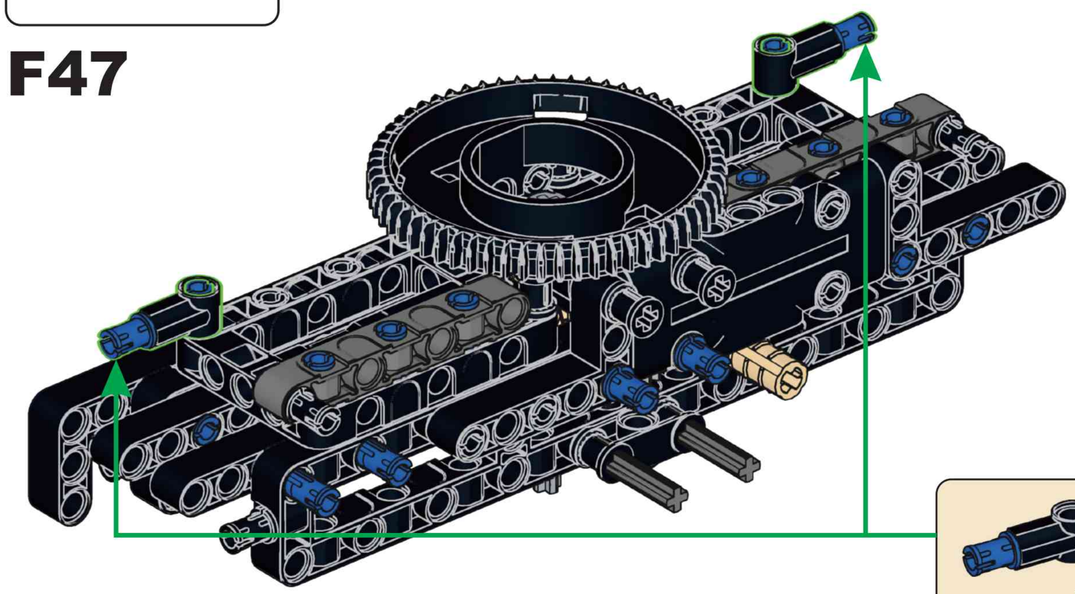

x2

3x 1x 13

F48

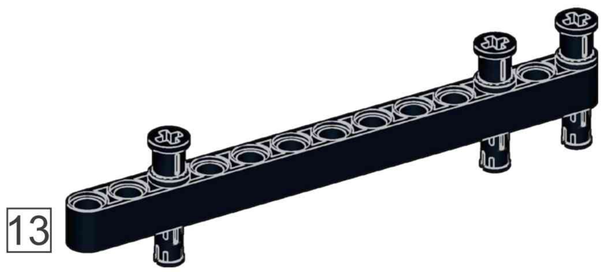

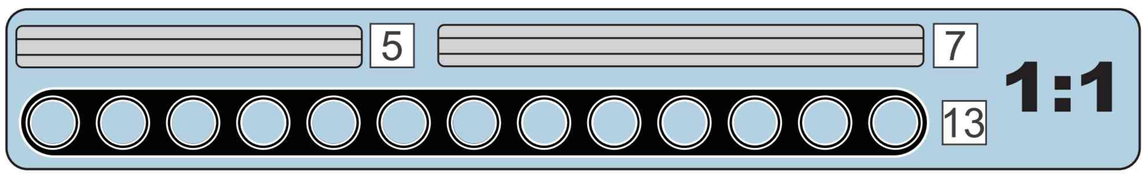

1x 1x 1x

F49

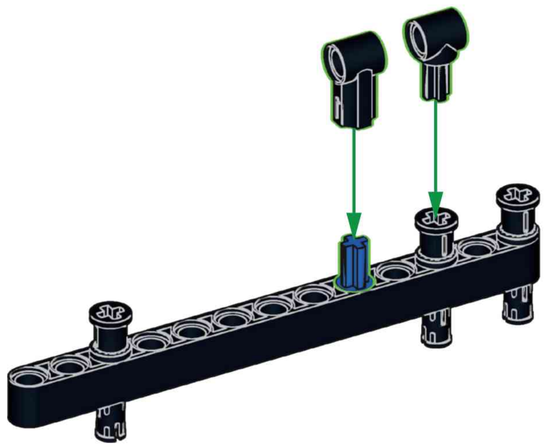

1x 1x 1x 1x 7

F50

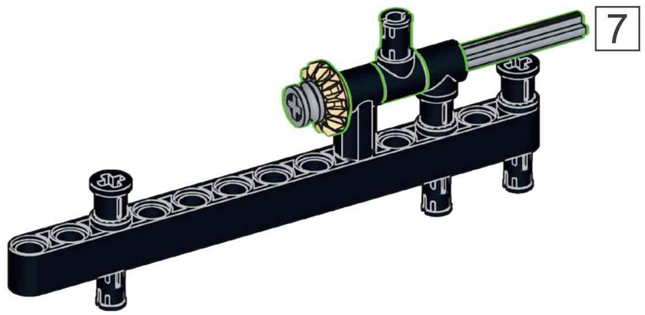

1x 5

F51

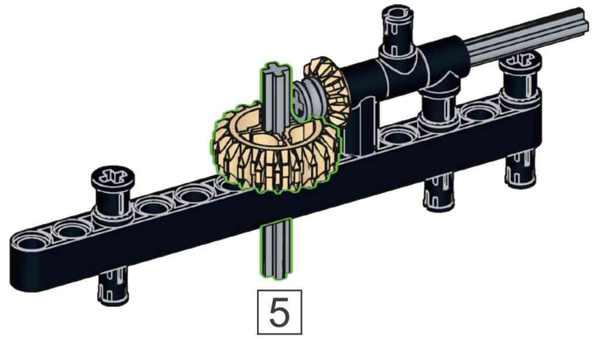

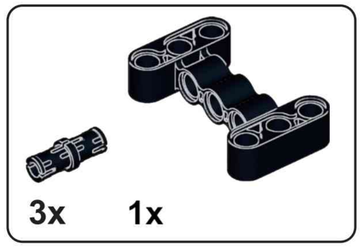

F52

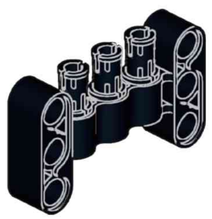

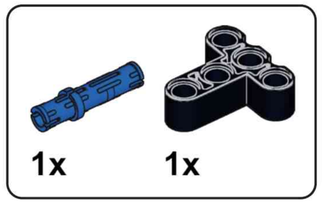

F53

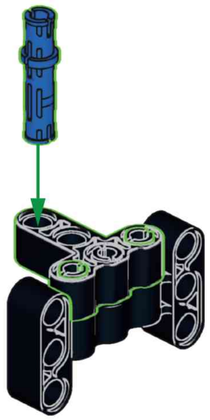

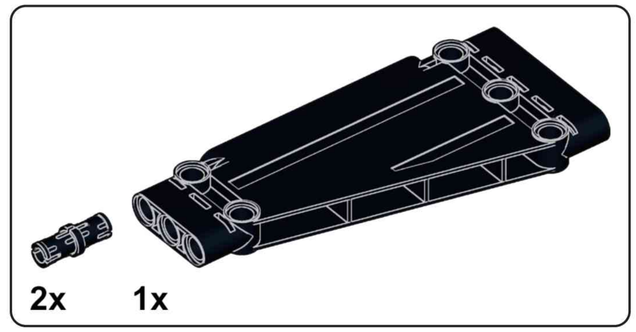

F54

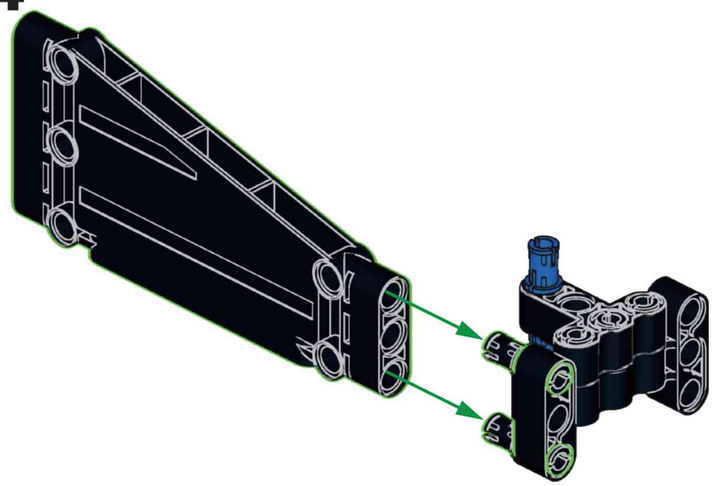

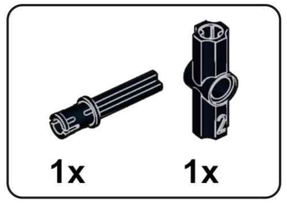

F55

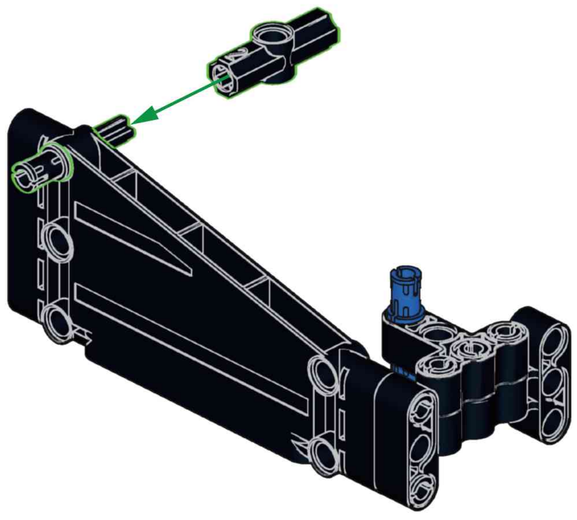

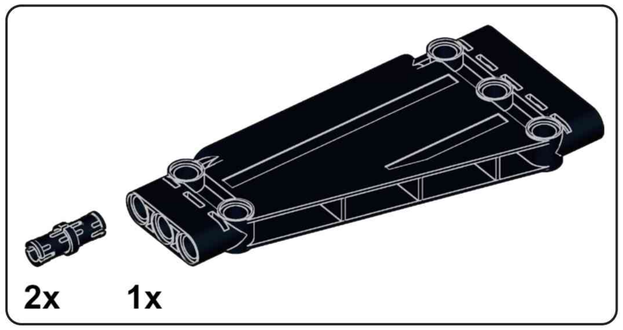

F56



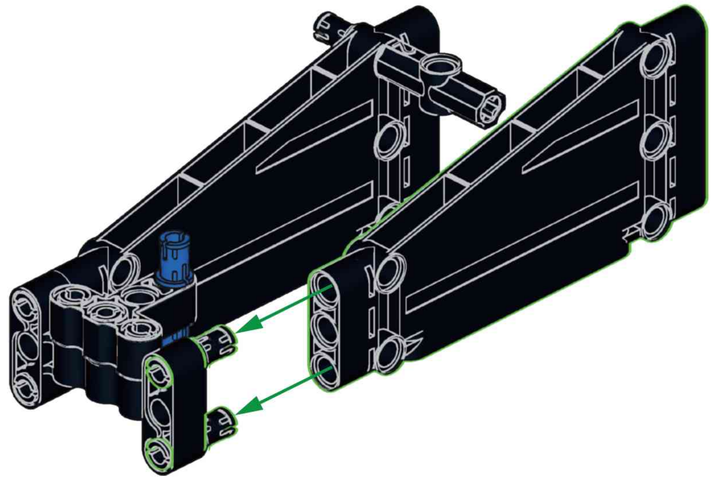

1x

F57

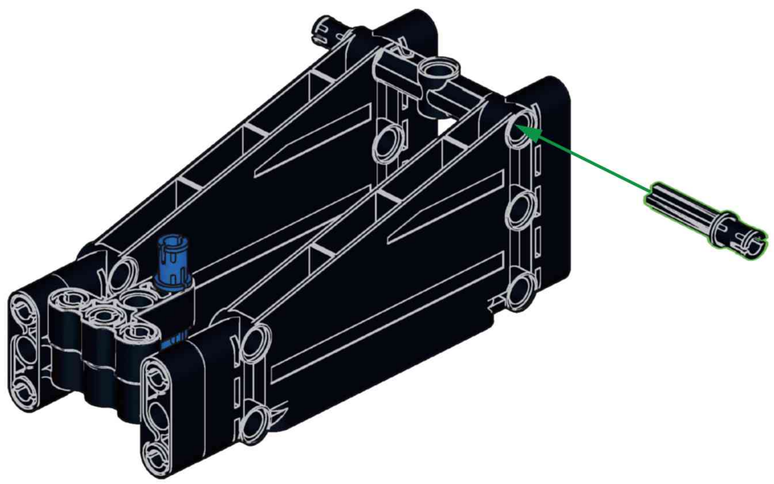

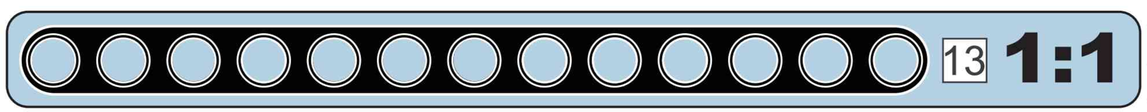

F58

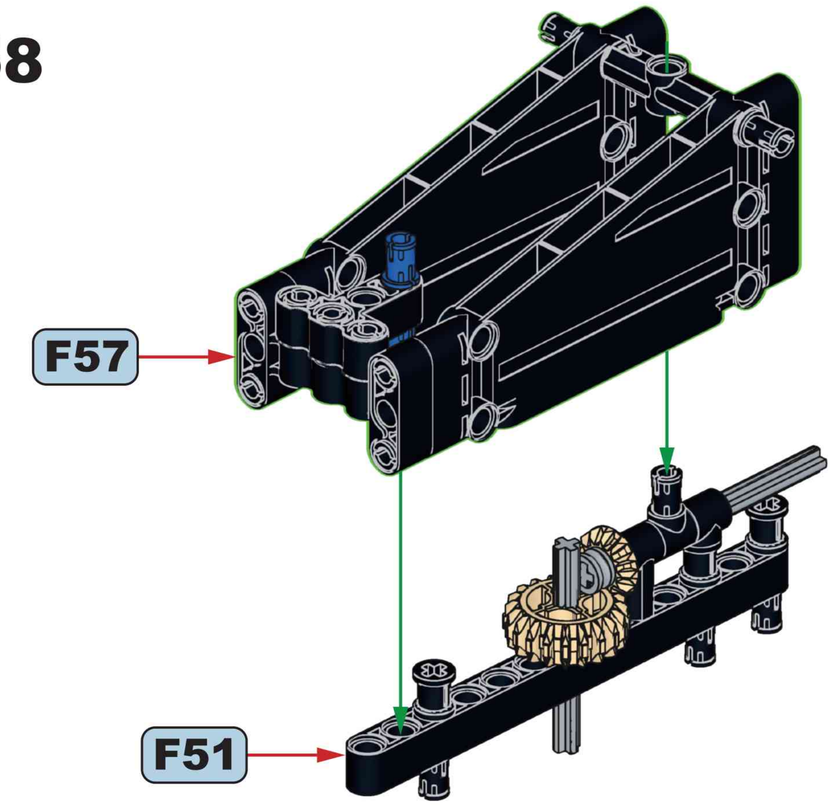

1x 2x

F59

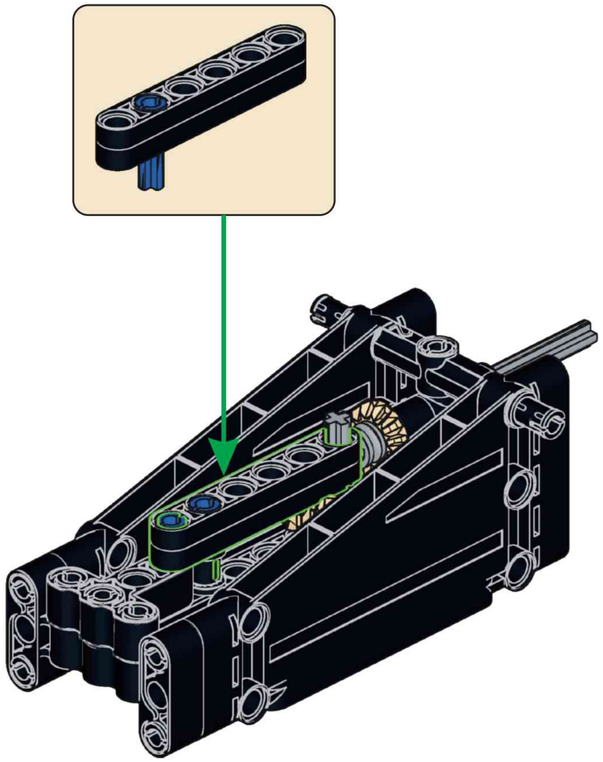

3x 1x

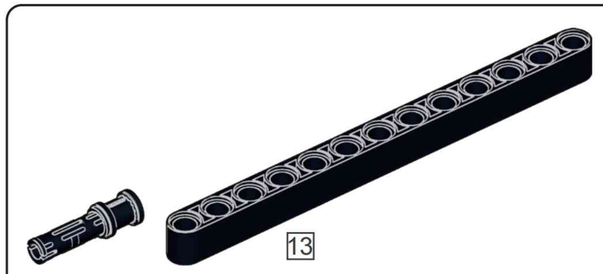

F60

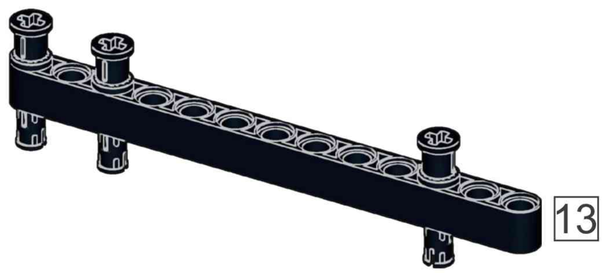

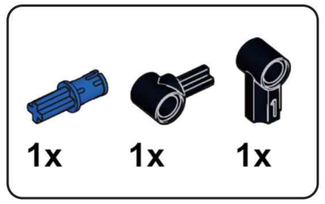

F61

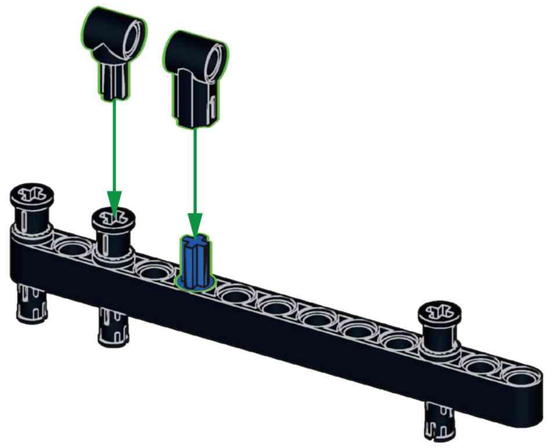



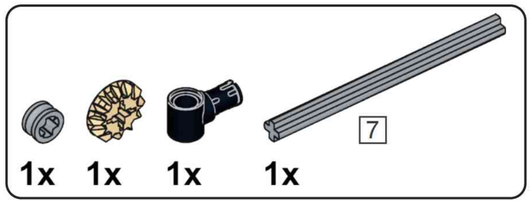

F62

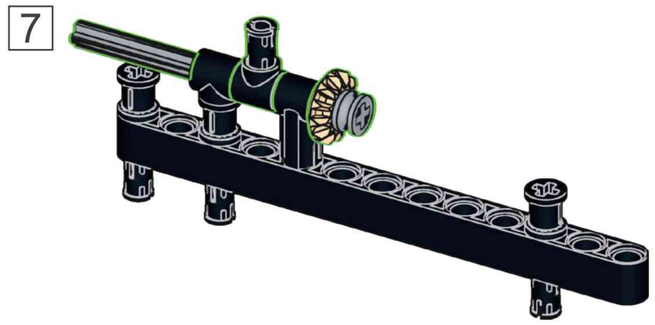

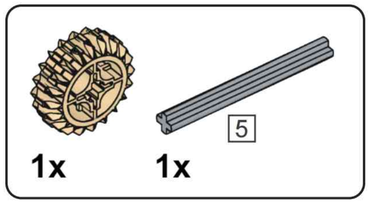

F63

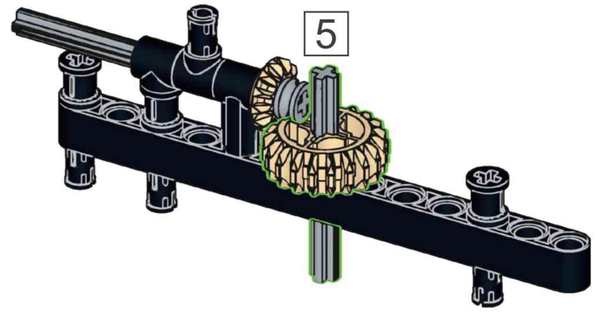

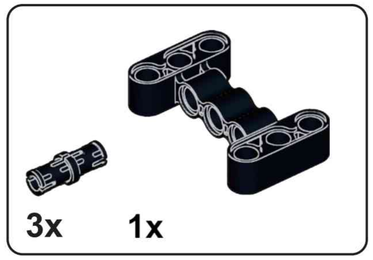

F64

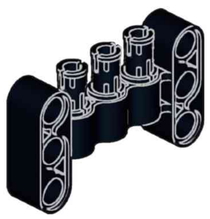

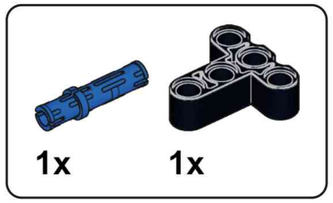

F65

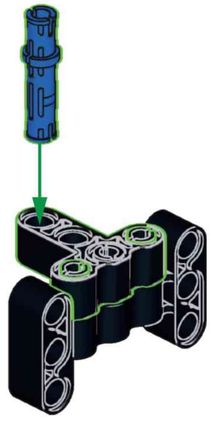

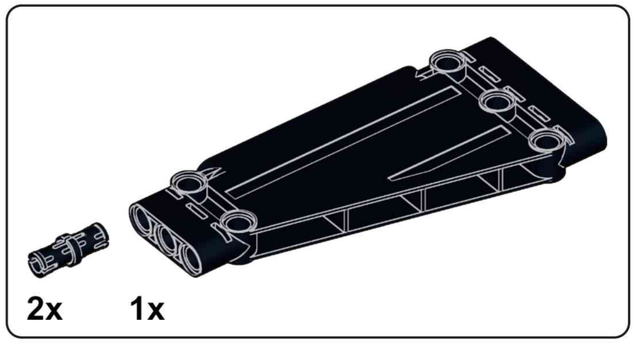

F66

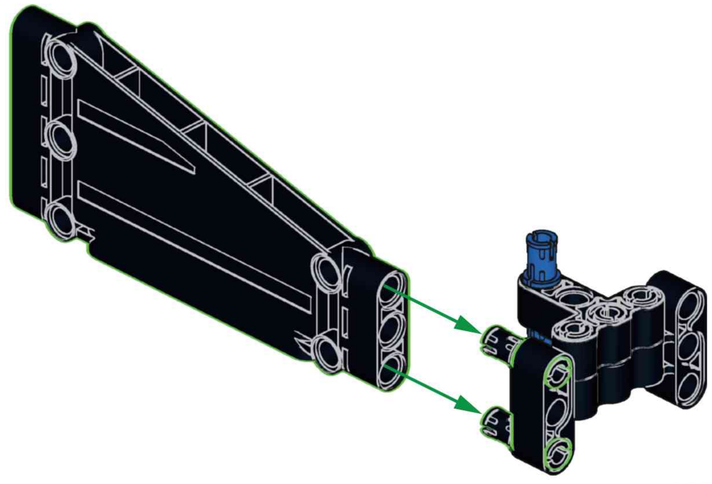

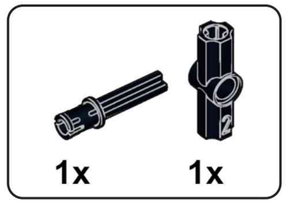

F67

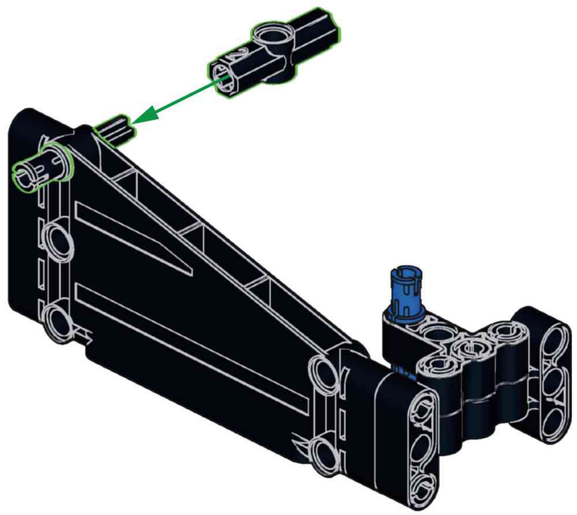

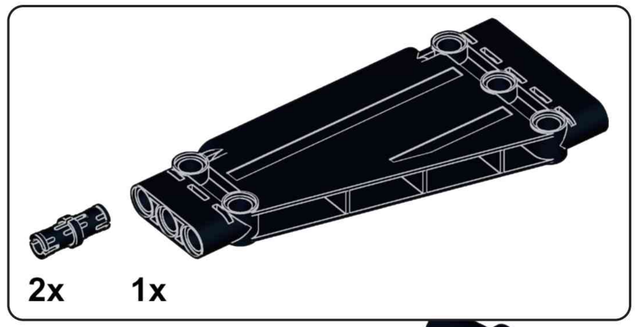

F68

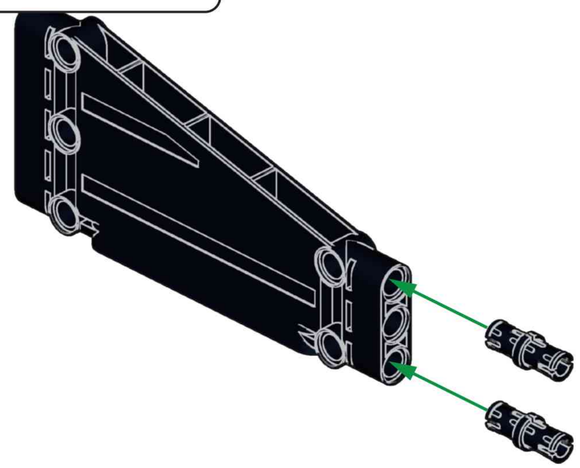

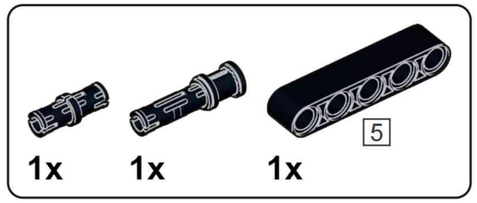

F69

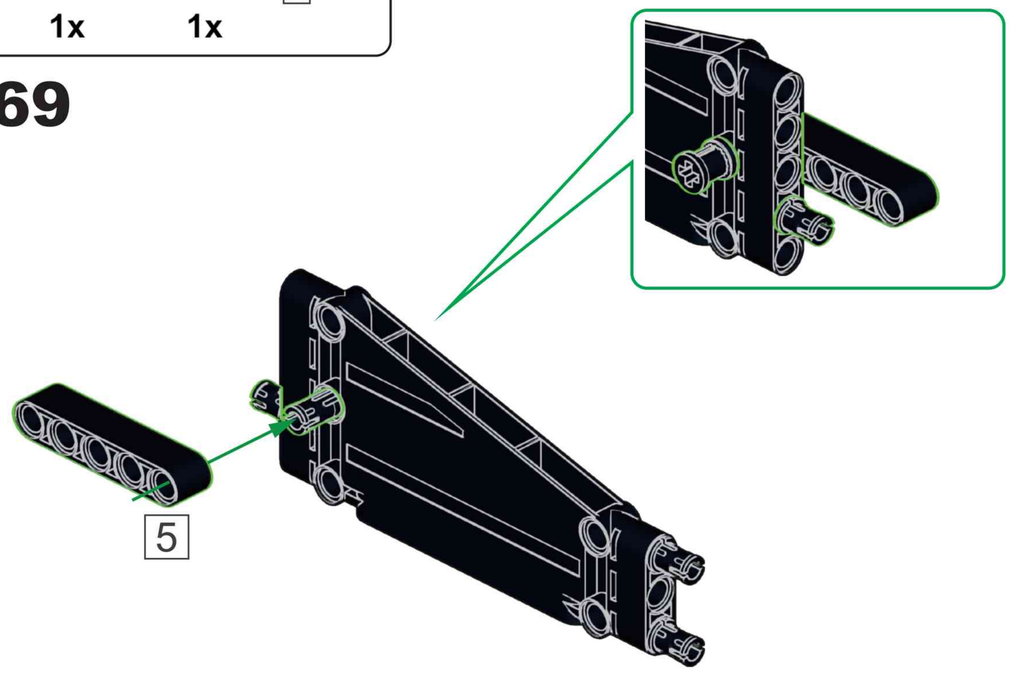

F70

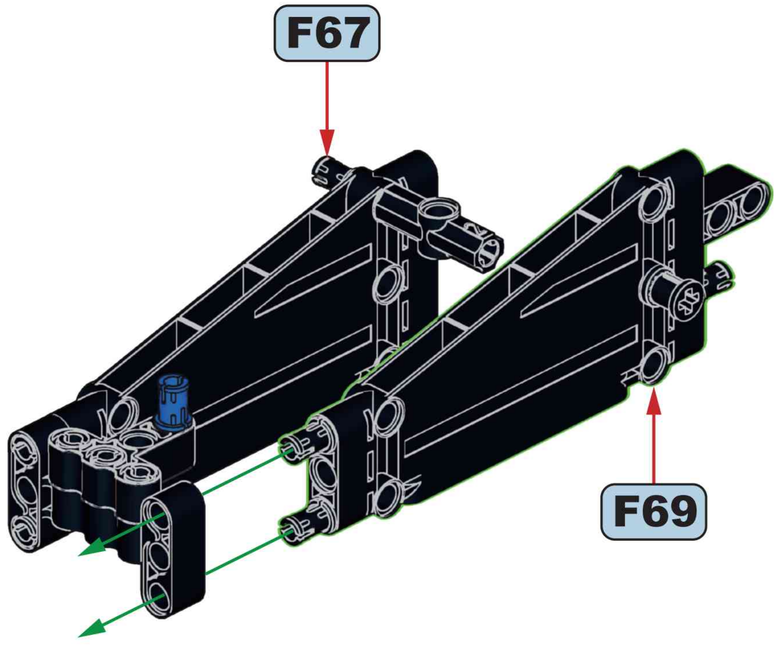

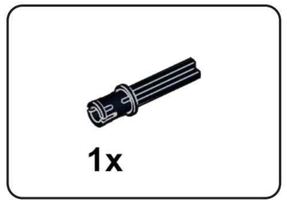

F71

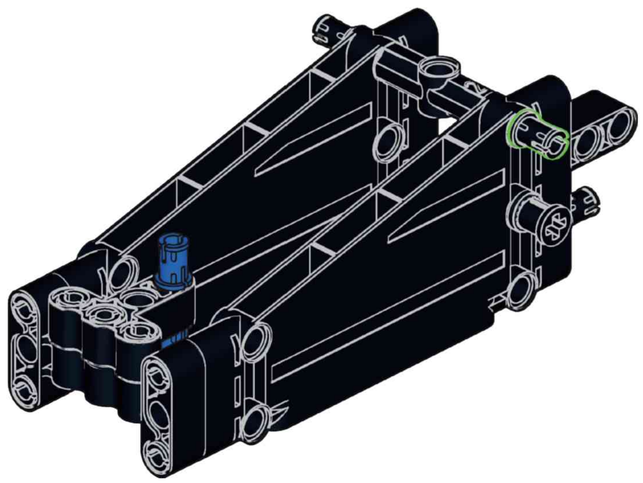

F72

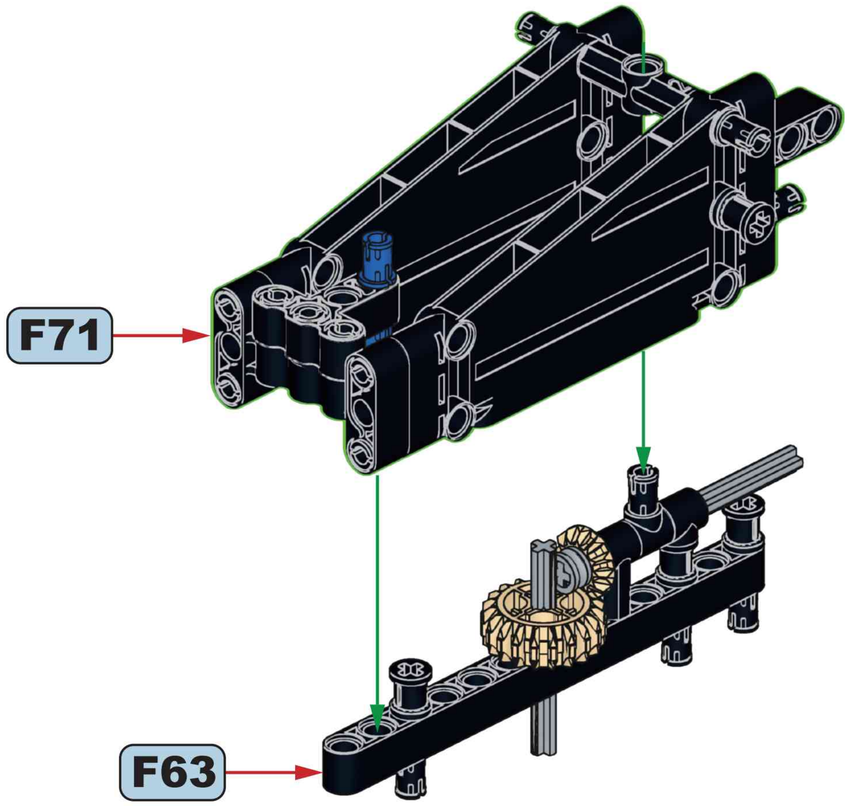

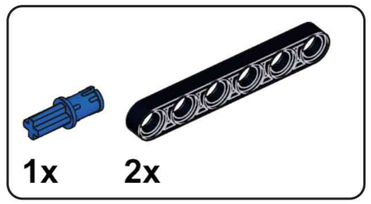

F73

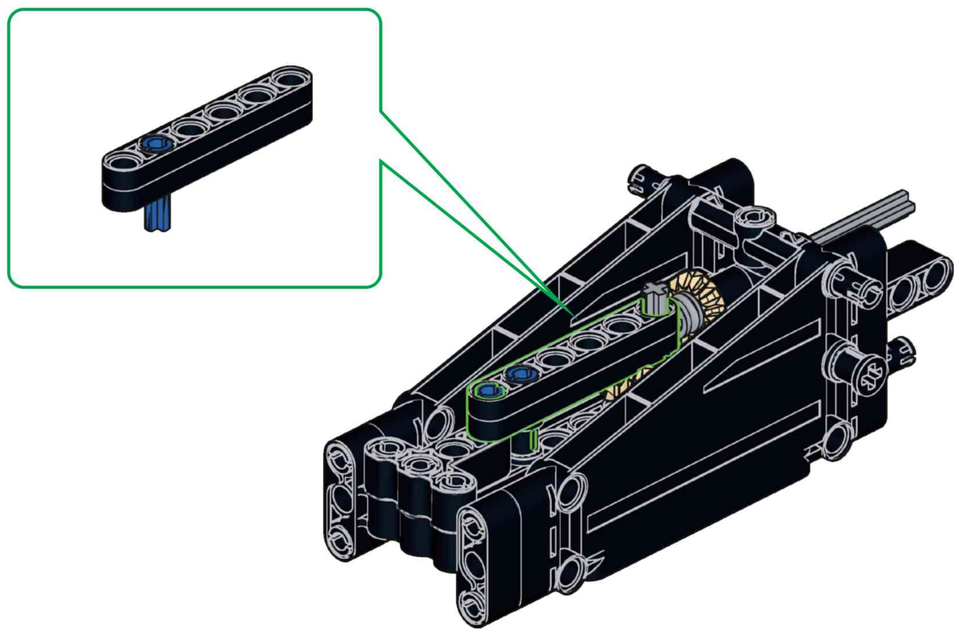

F74

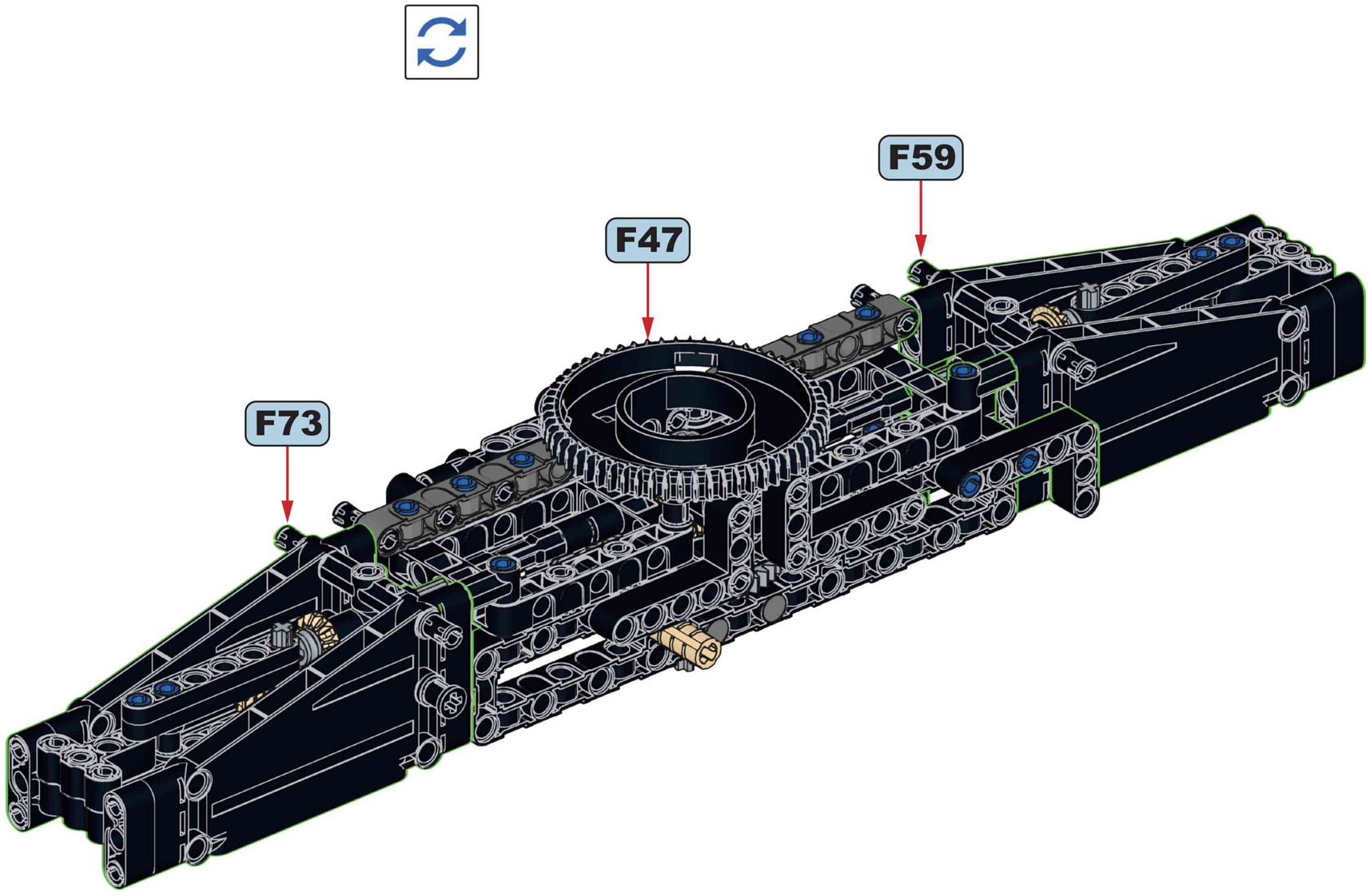

1x

F75

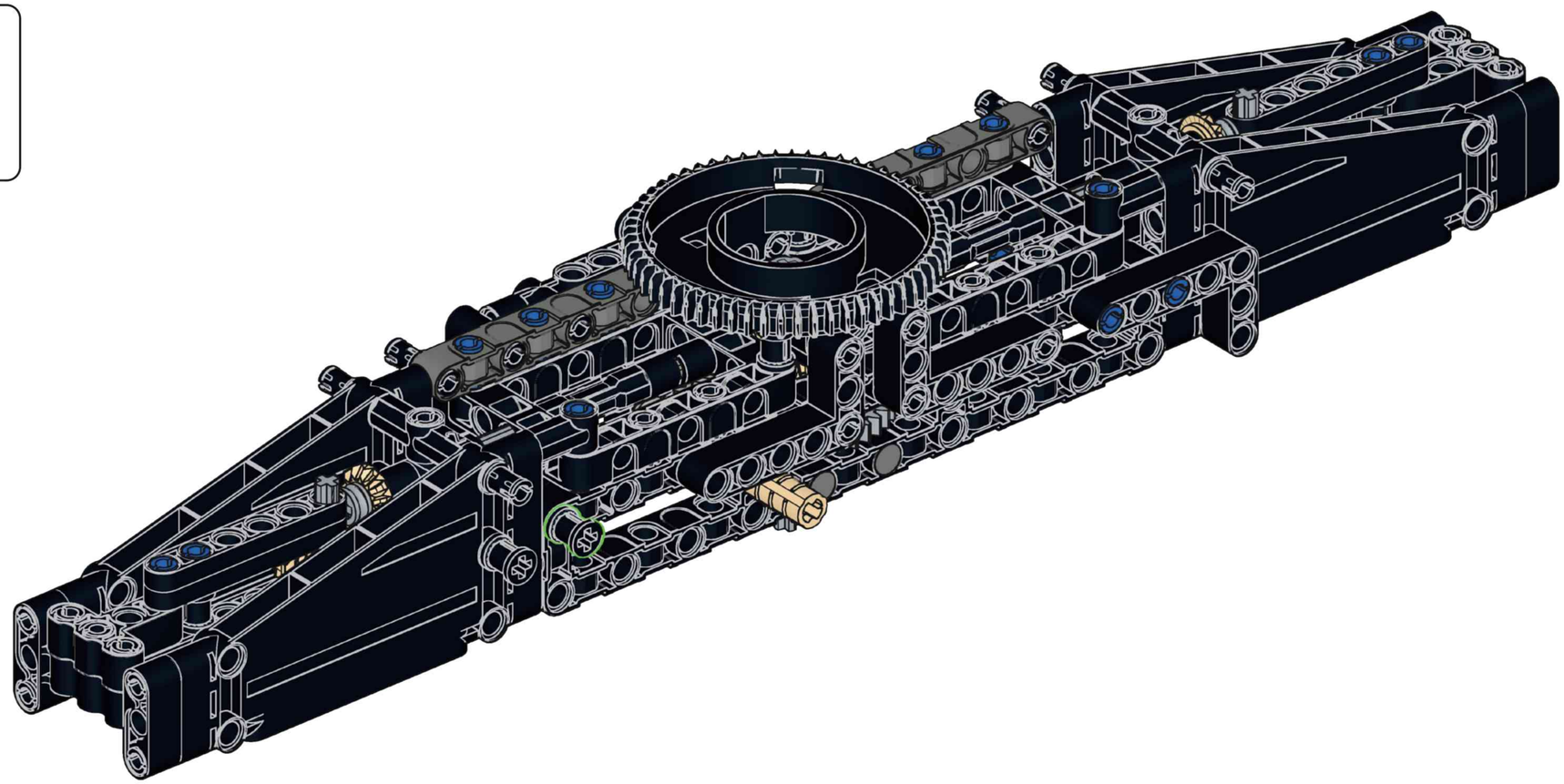

2x

F76

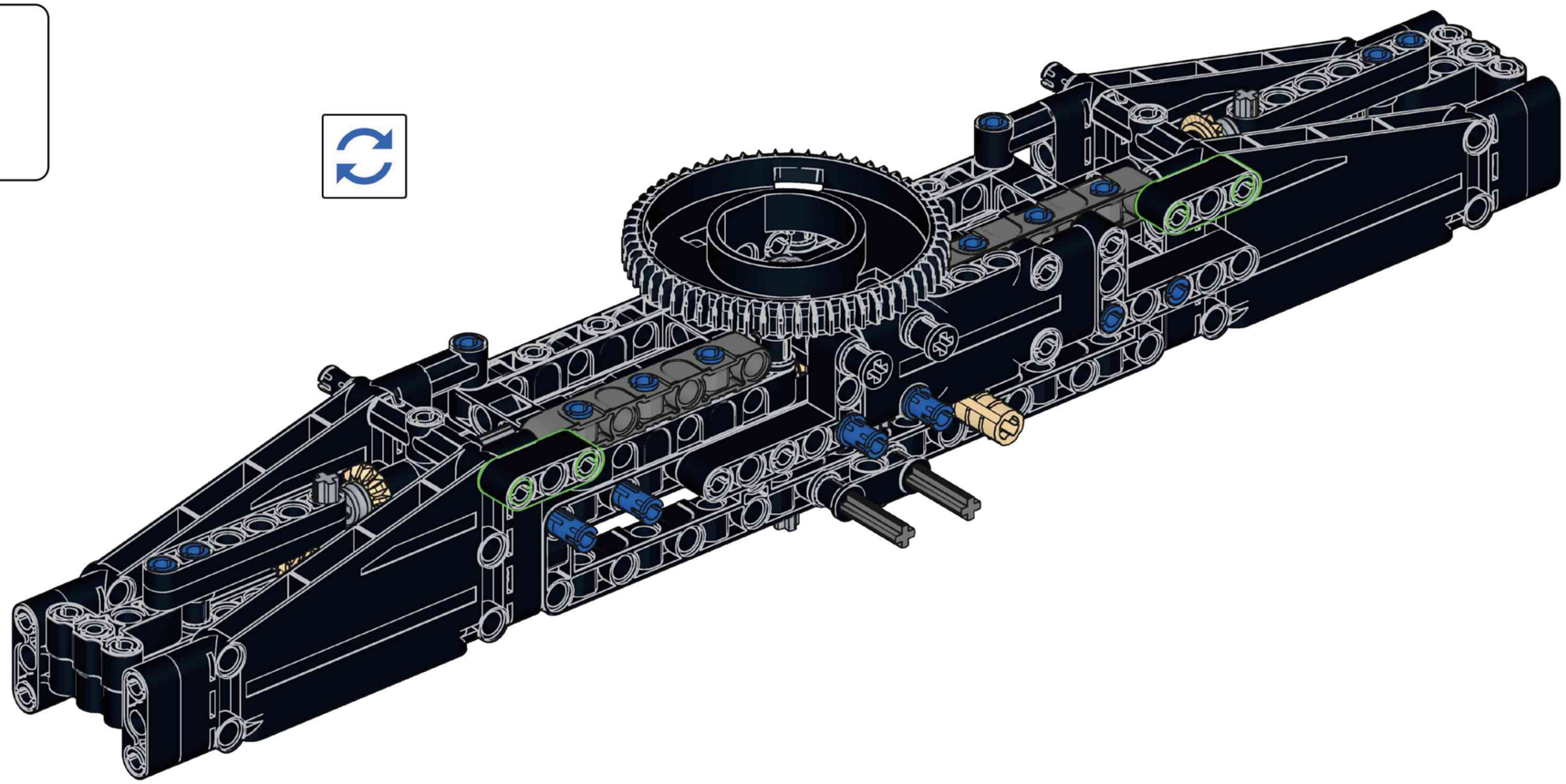

F77

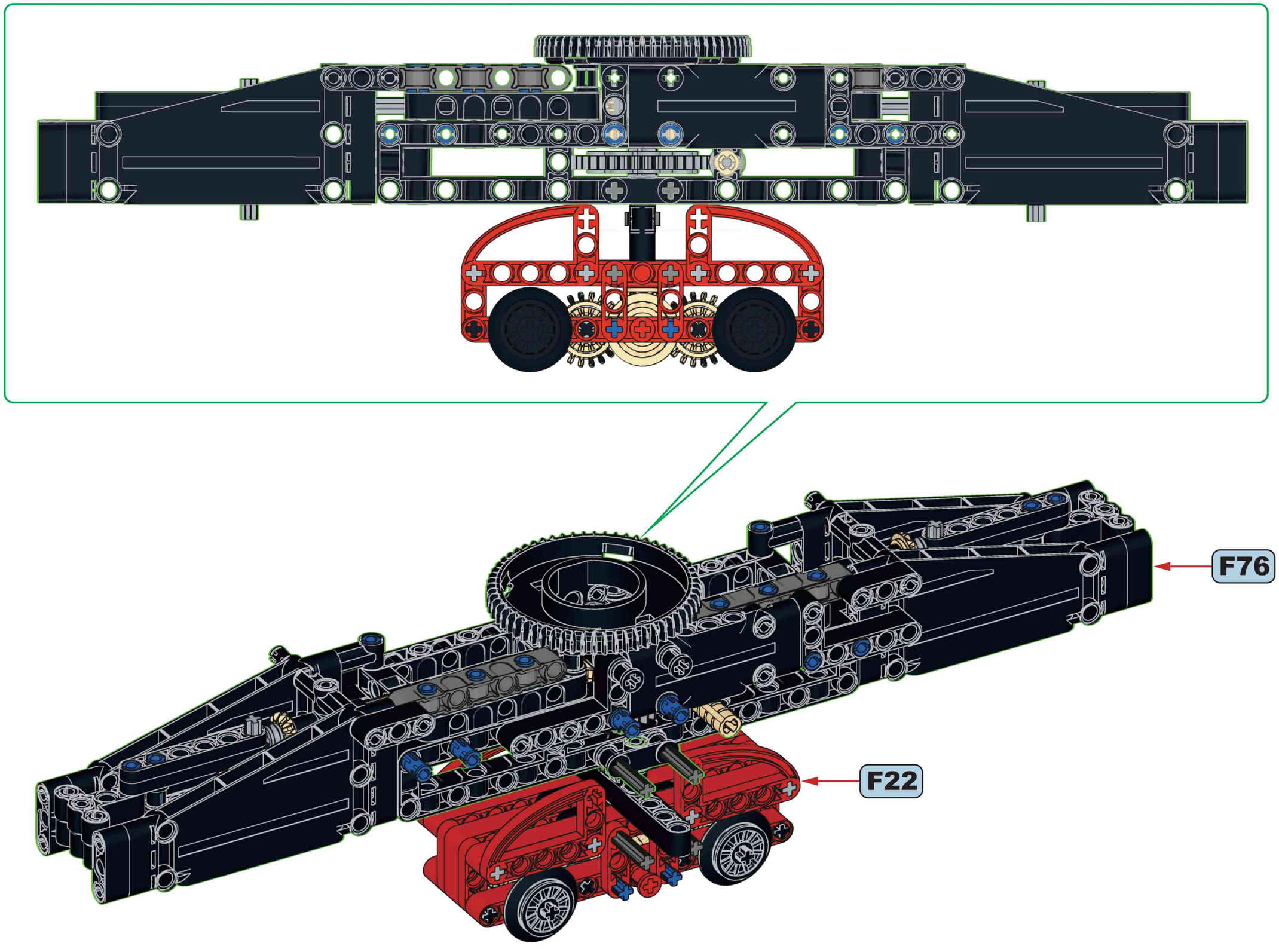

F78

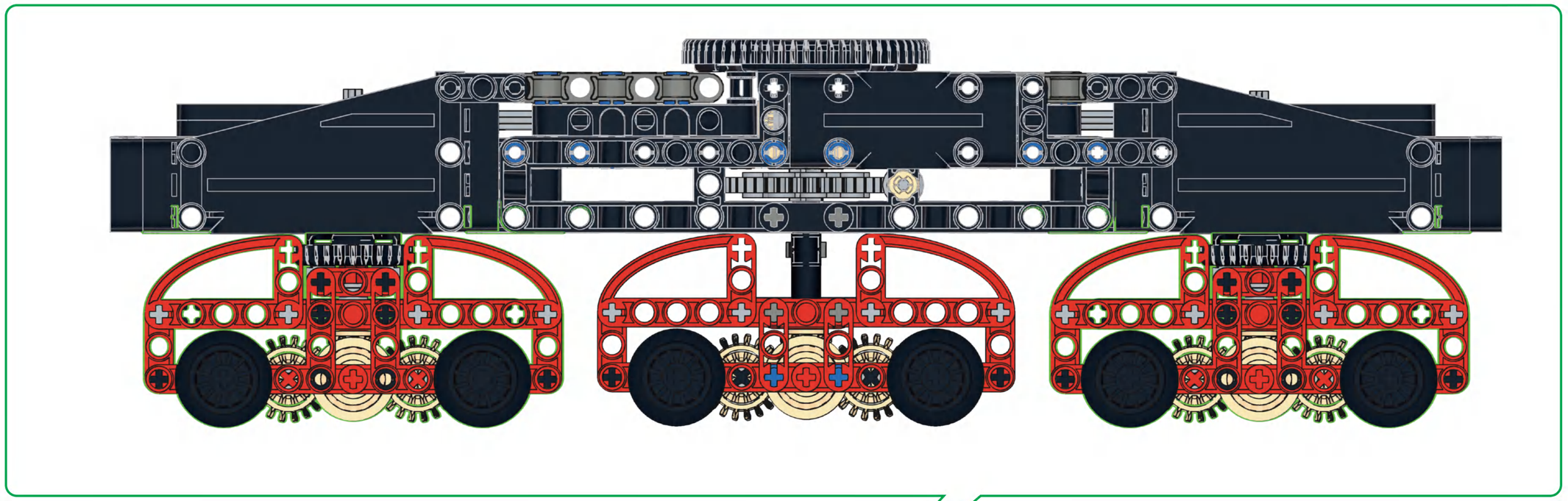

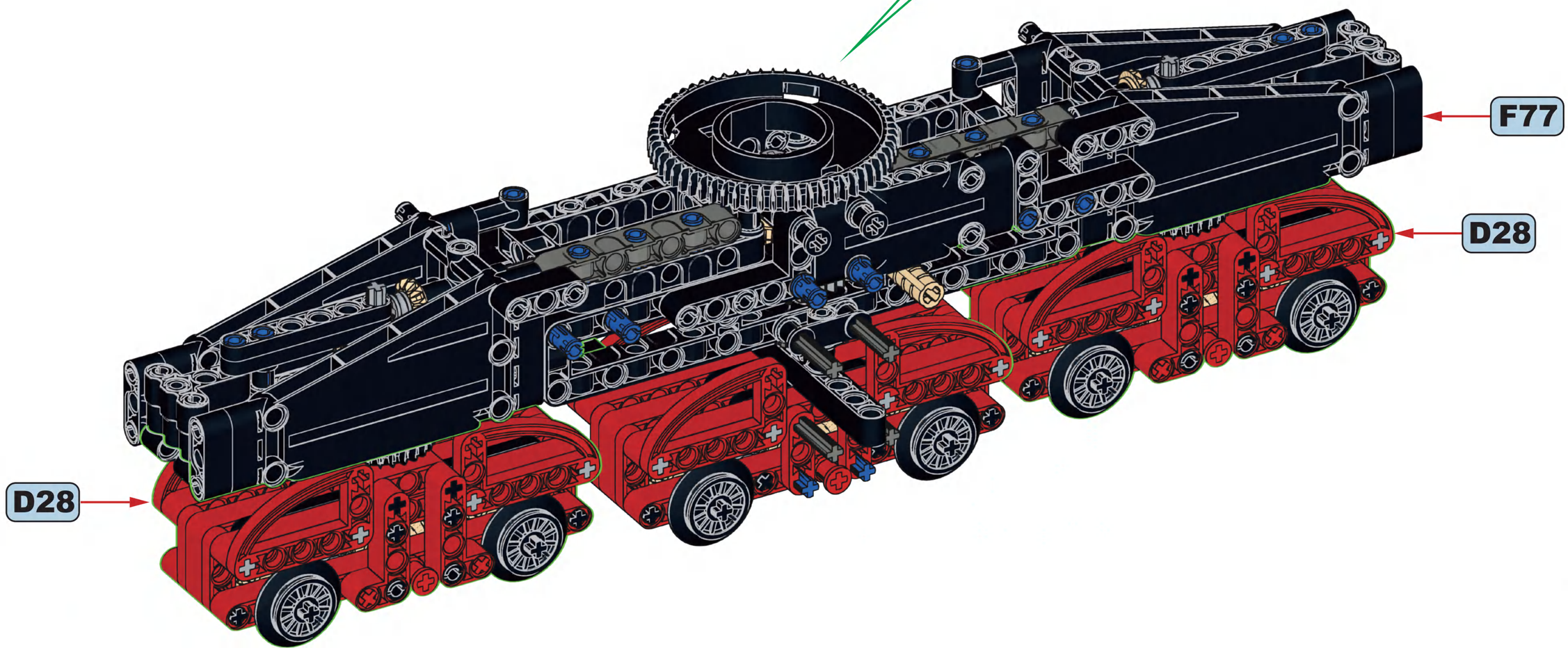



13x

F79

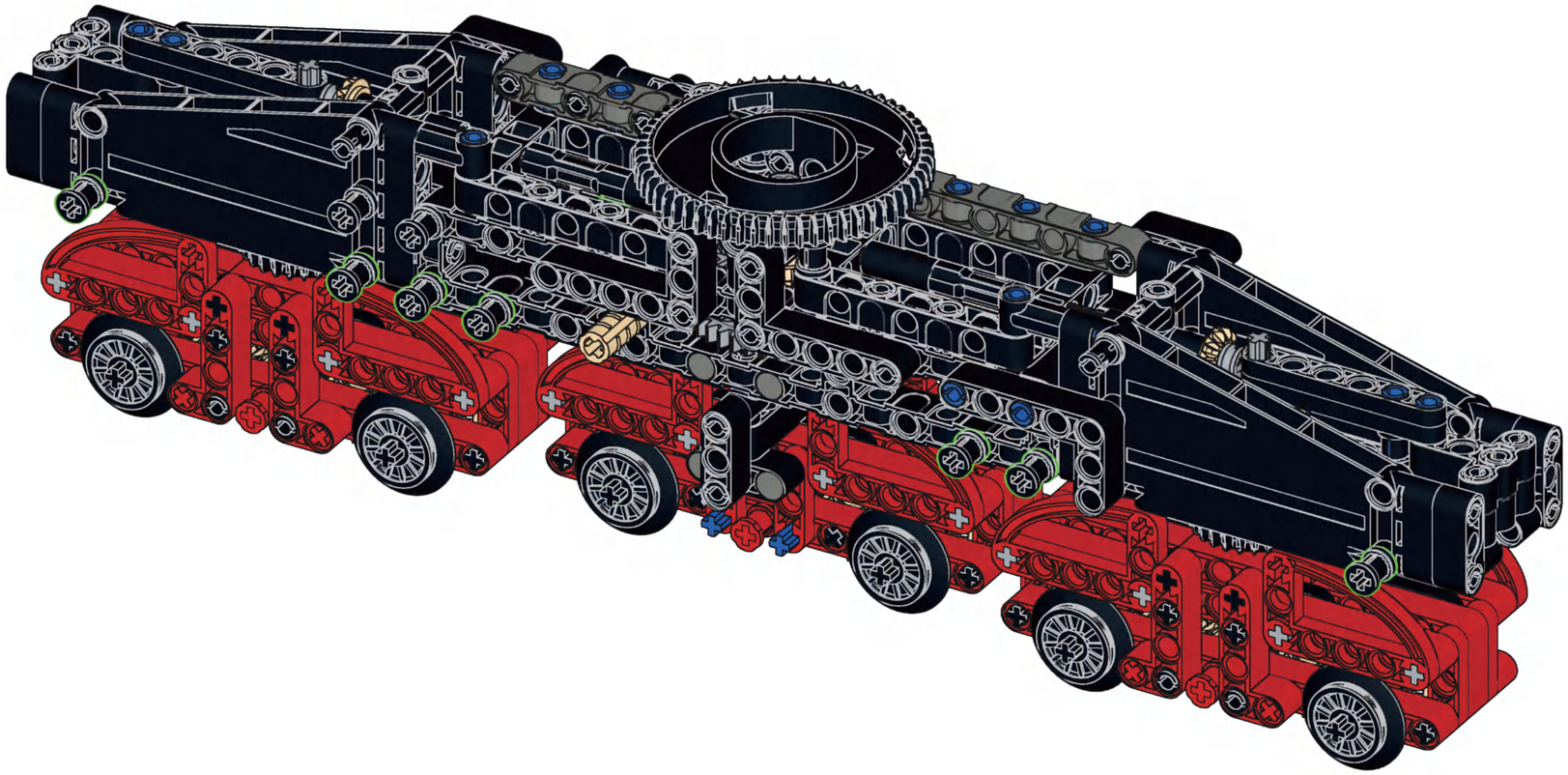

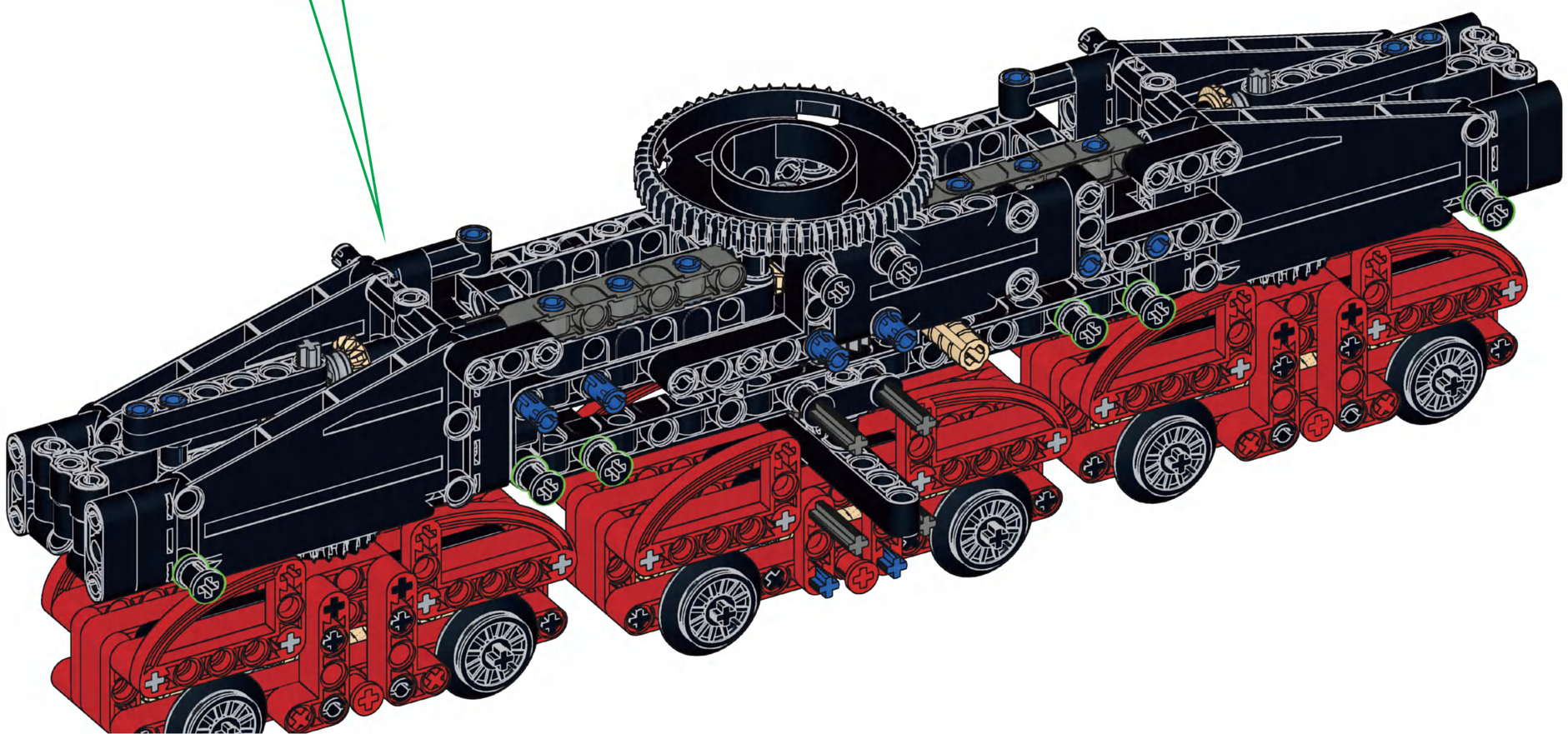

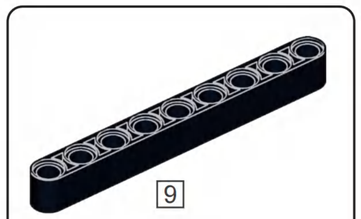

2x

F80

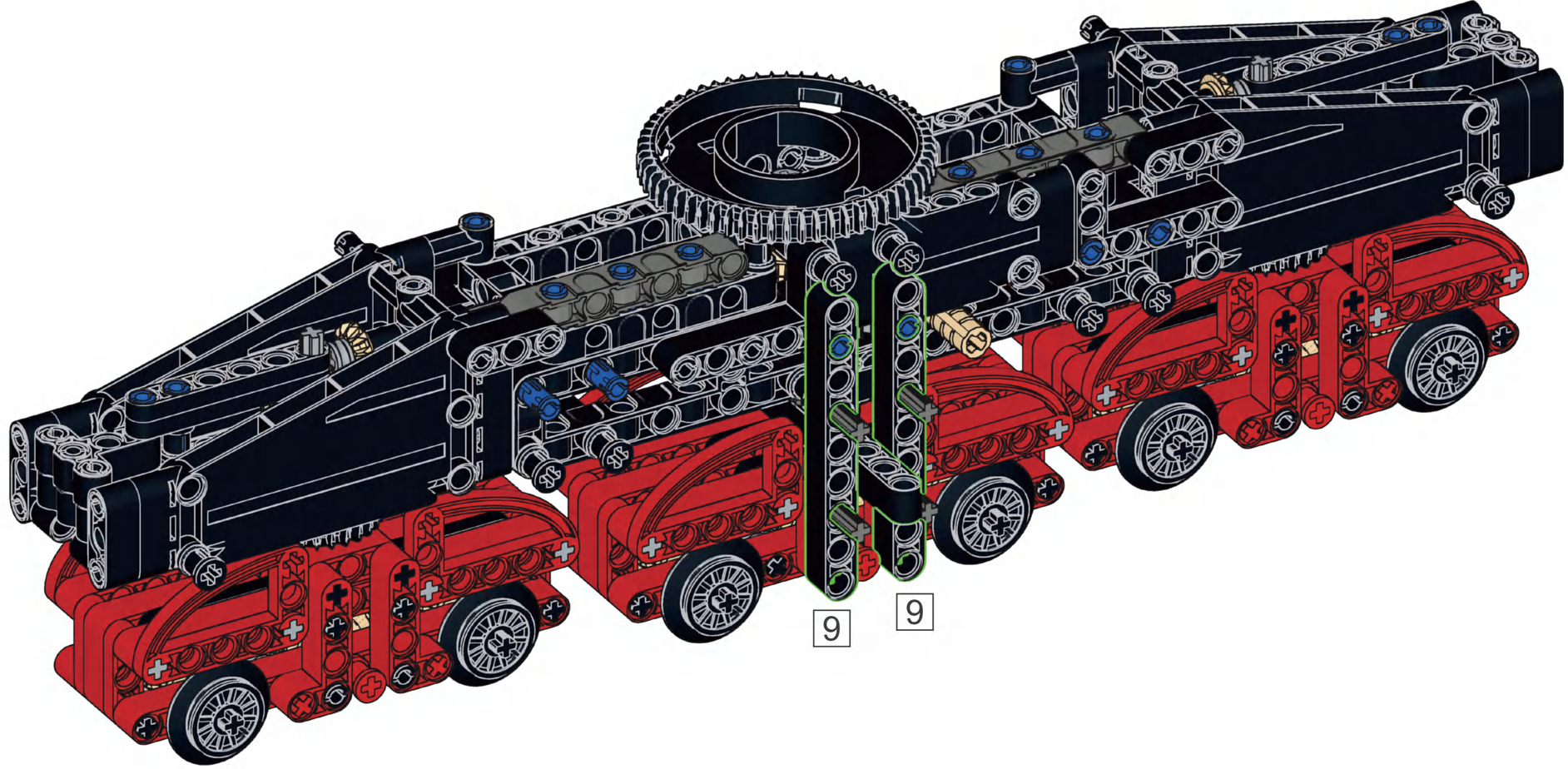



1x

F81

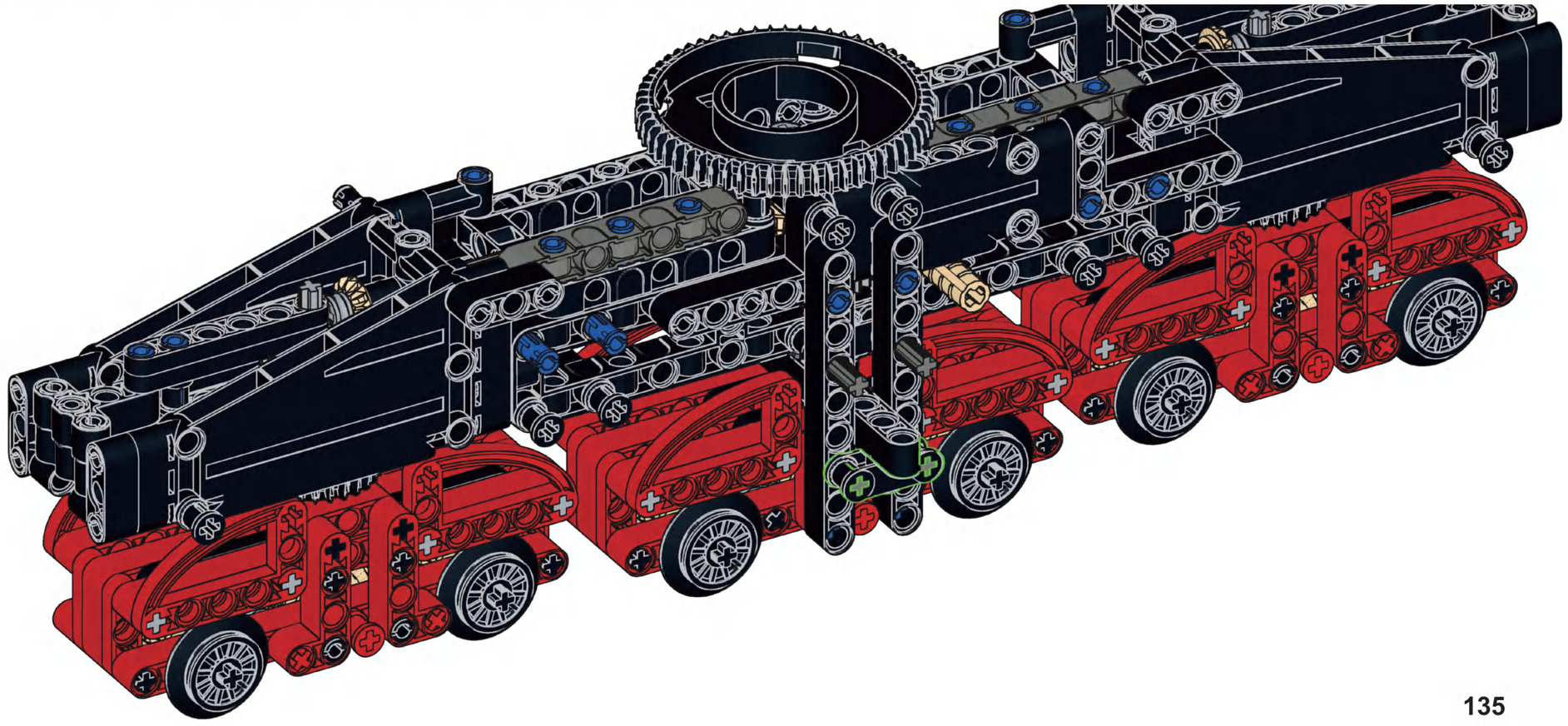



1x

F82

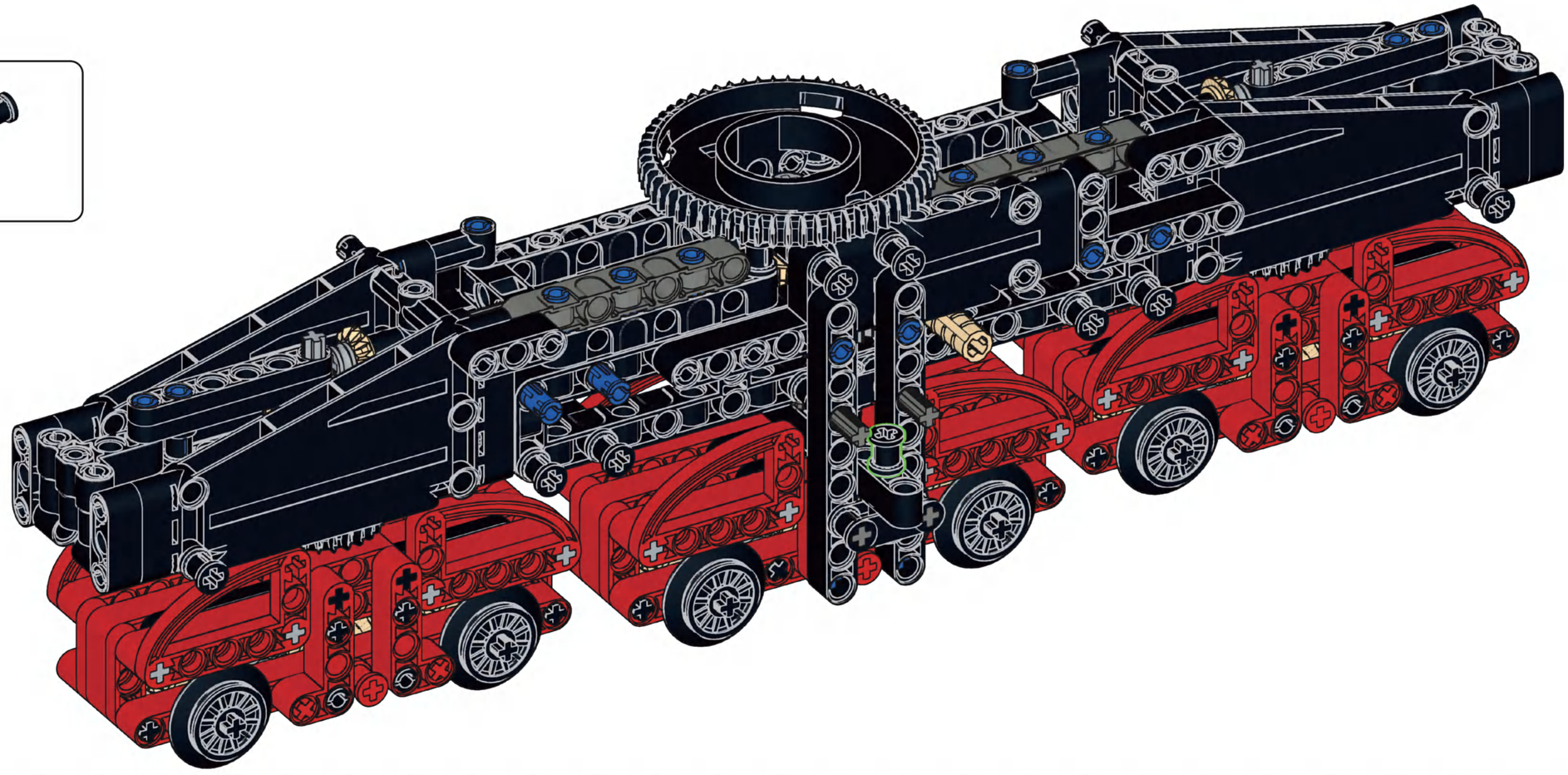



1x

F83

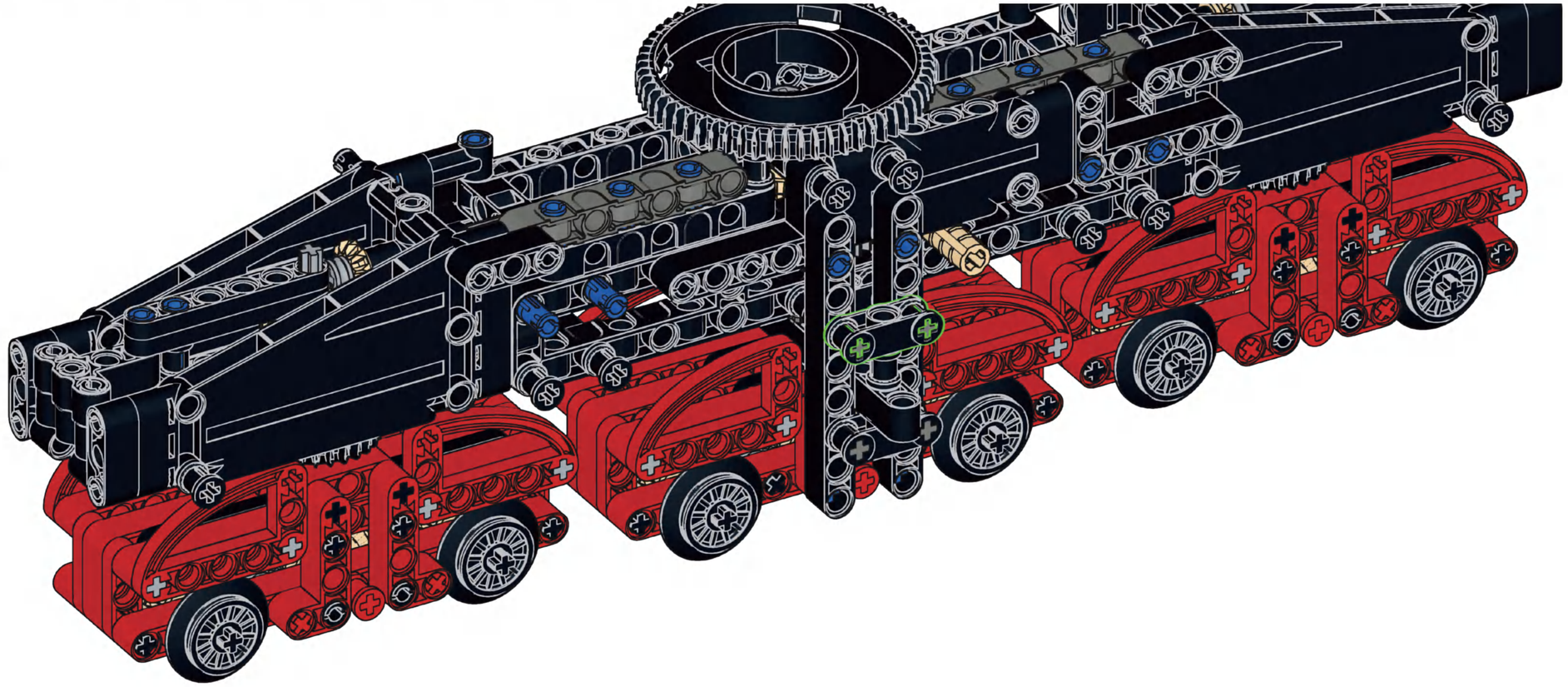

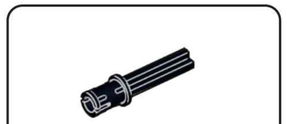

F84

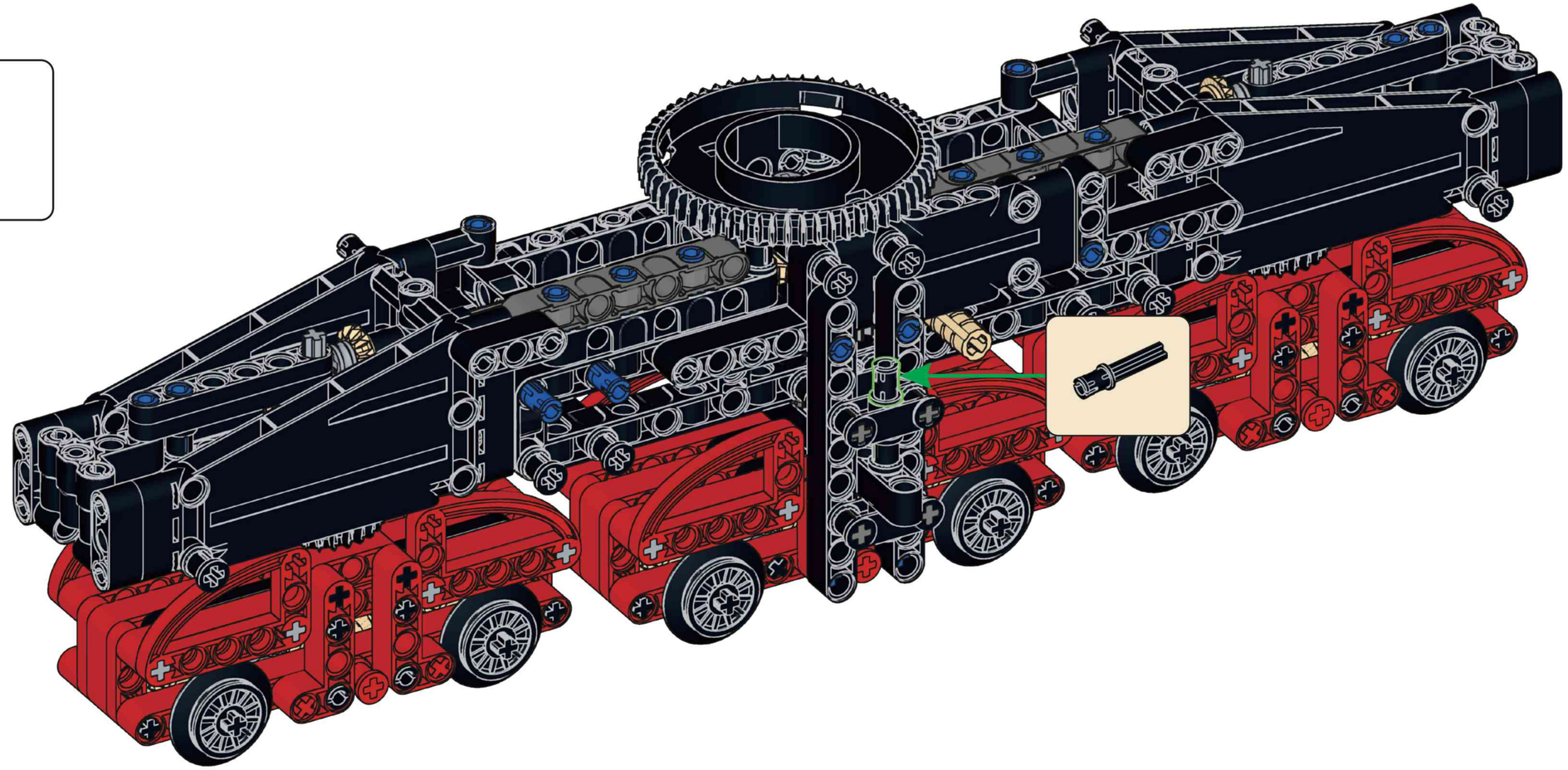

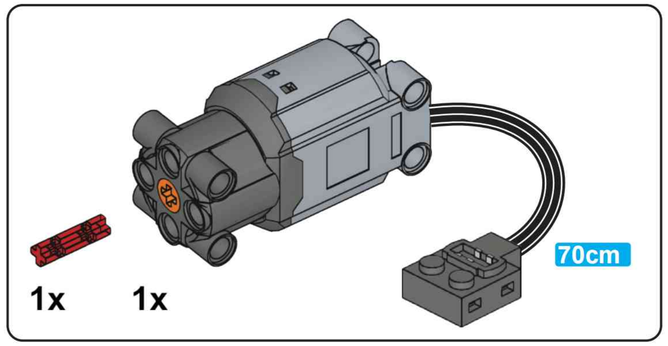

F85

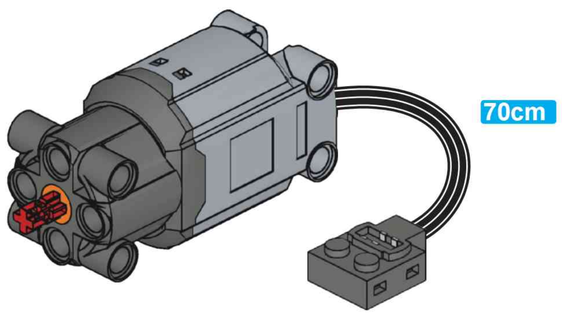

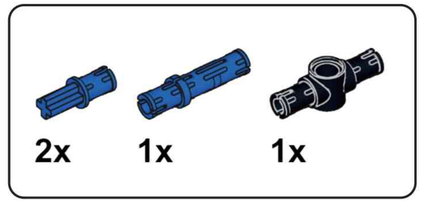

F86

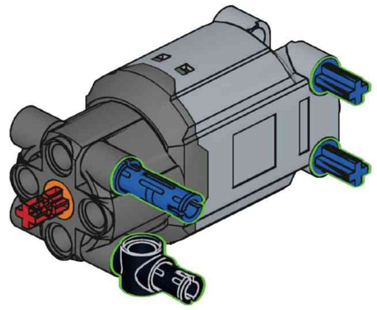

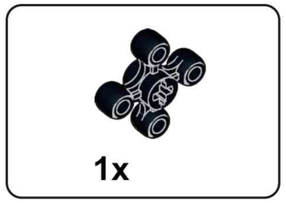

F87

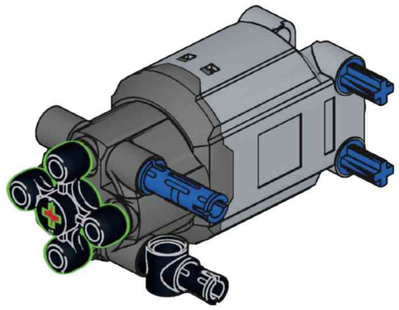

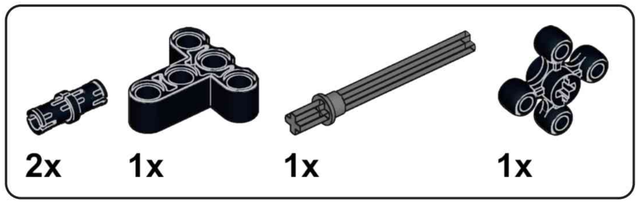

F88

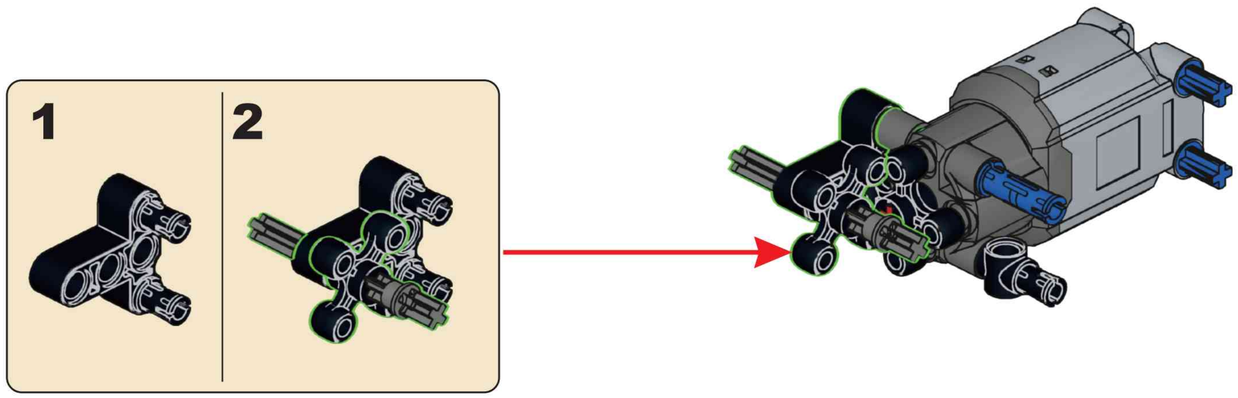

F89

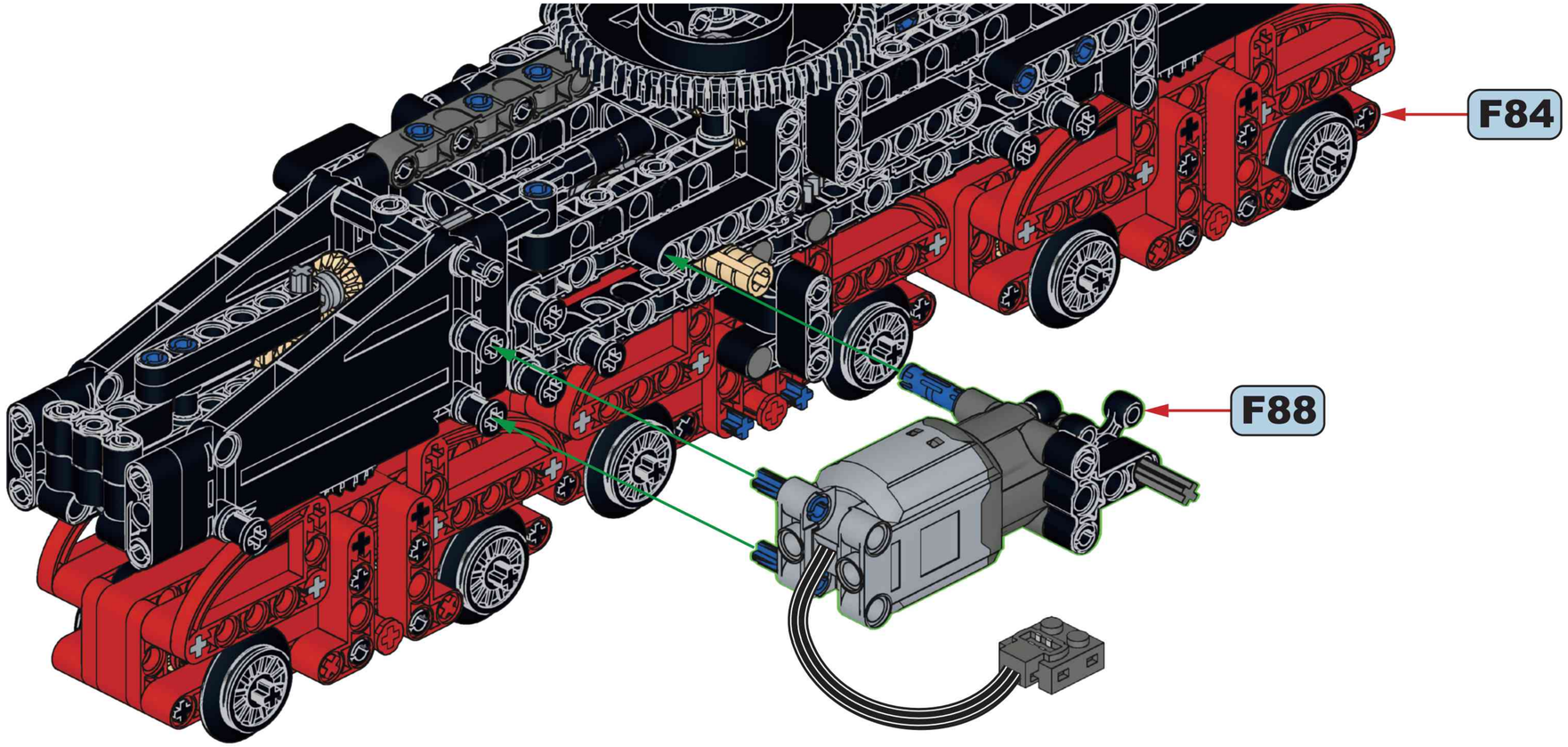

F90

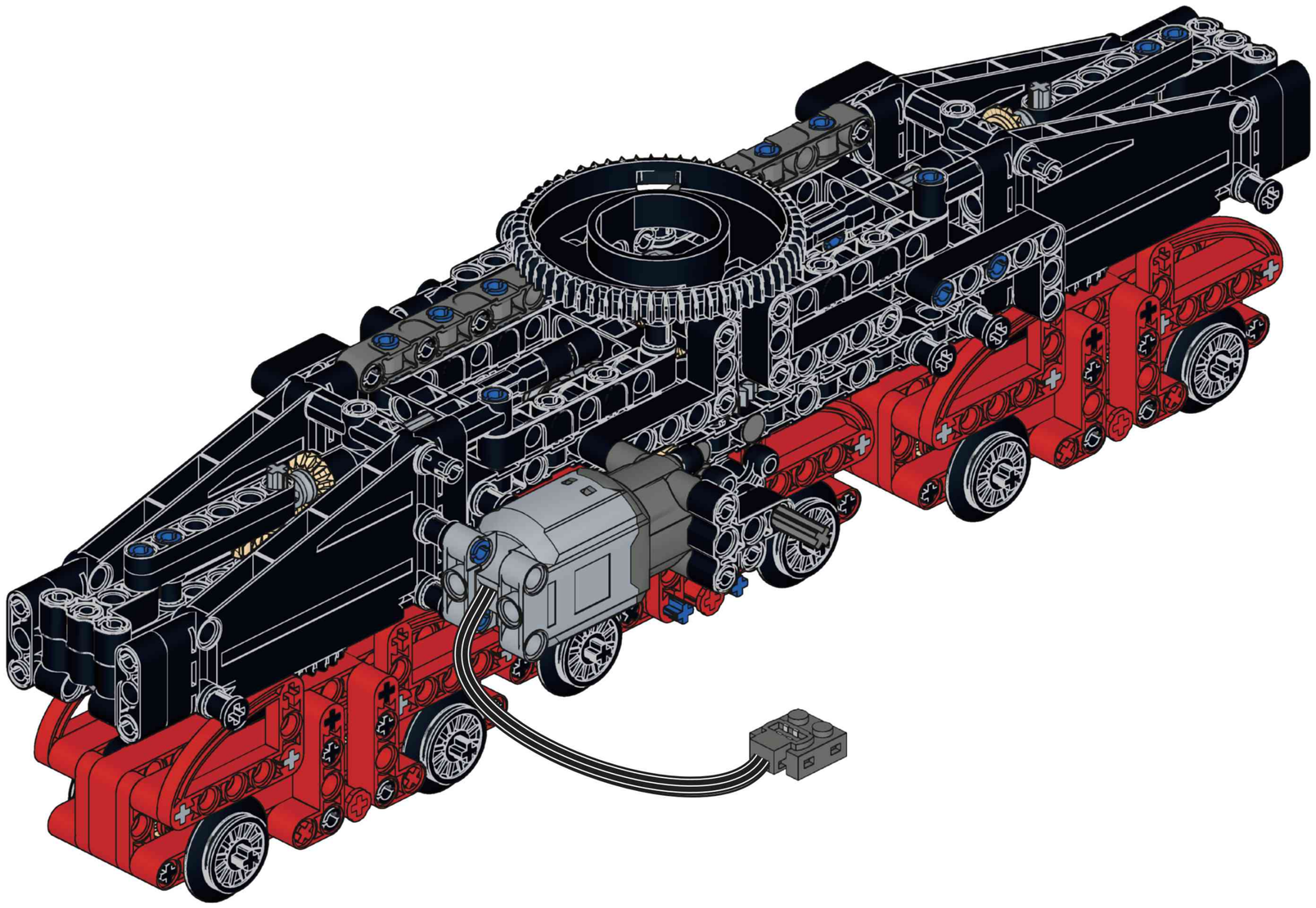

x2

F91

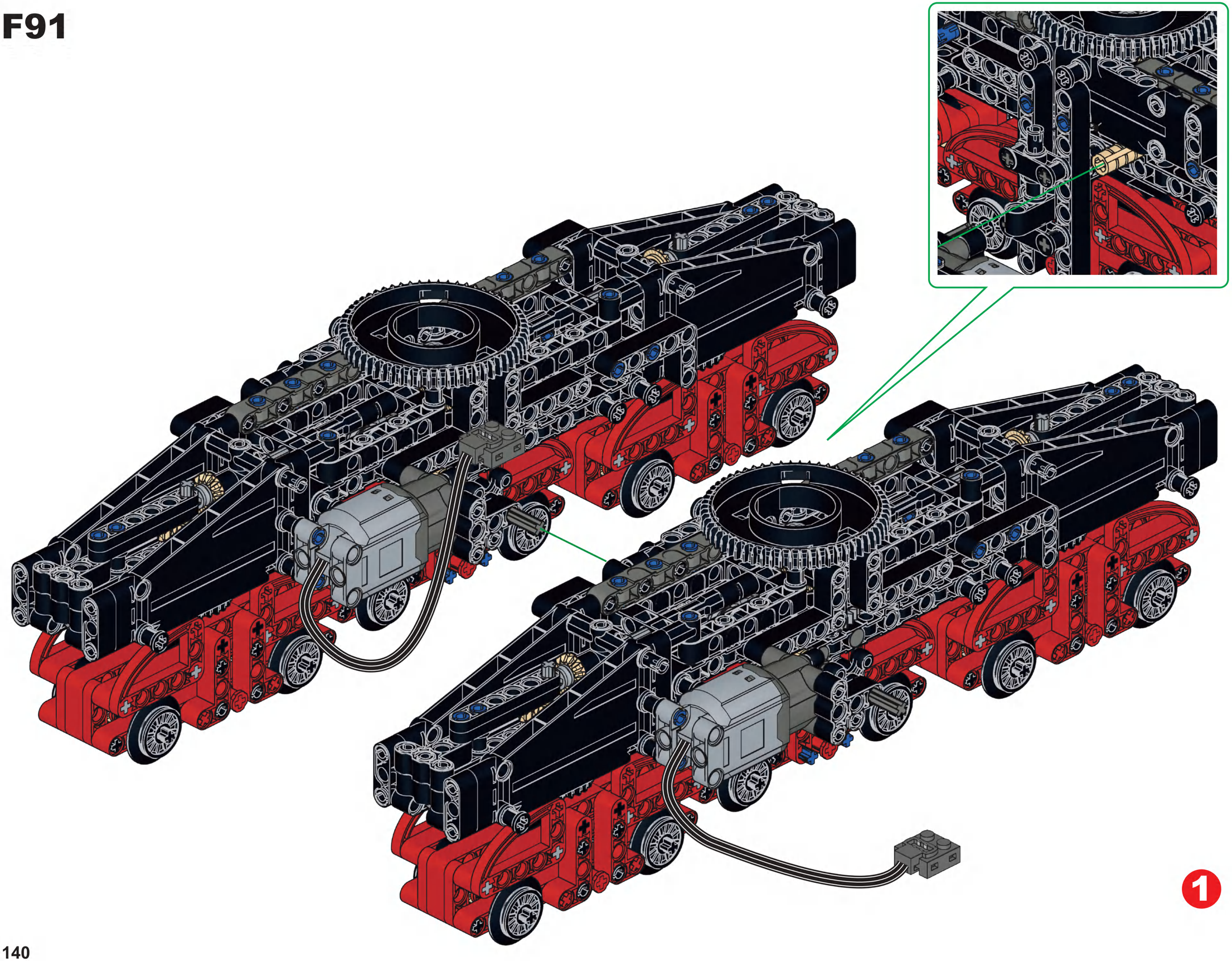

1

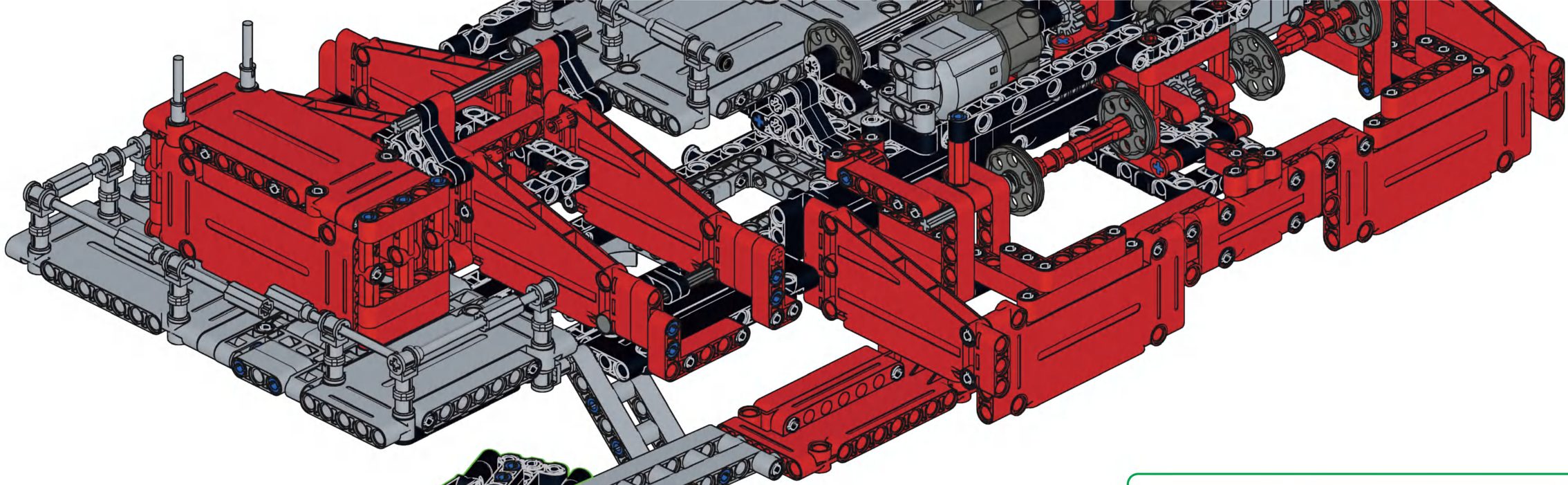

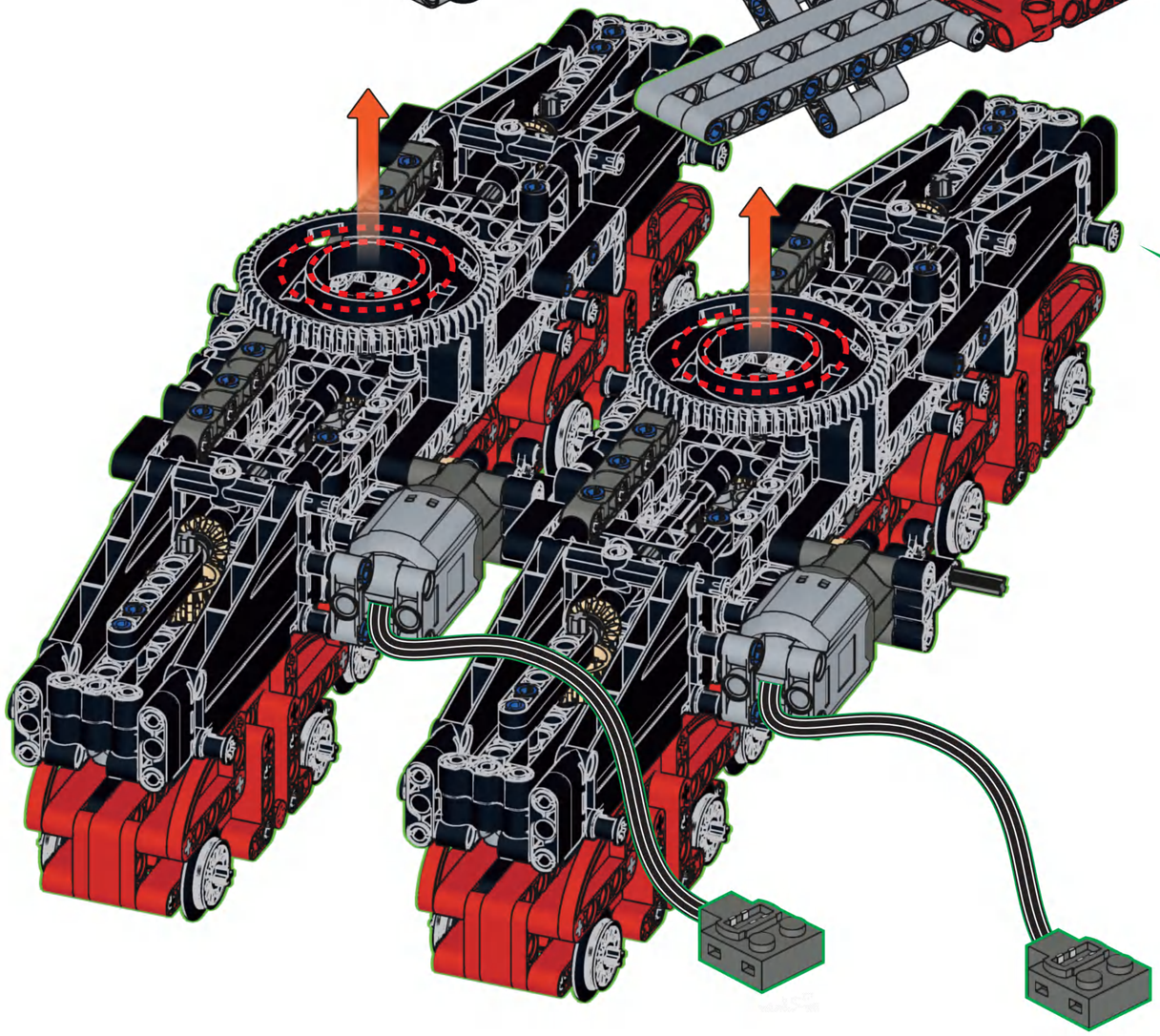

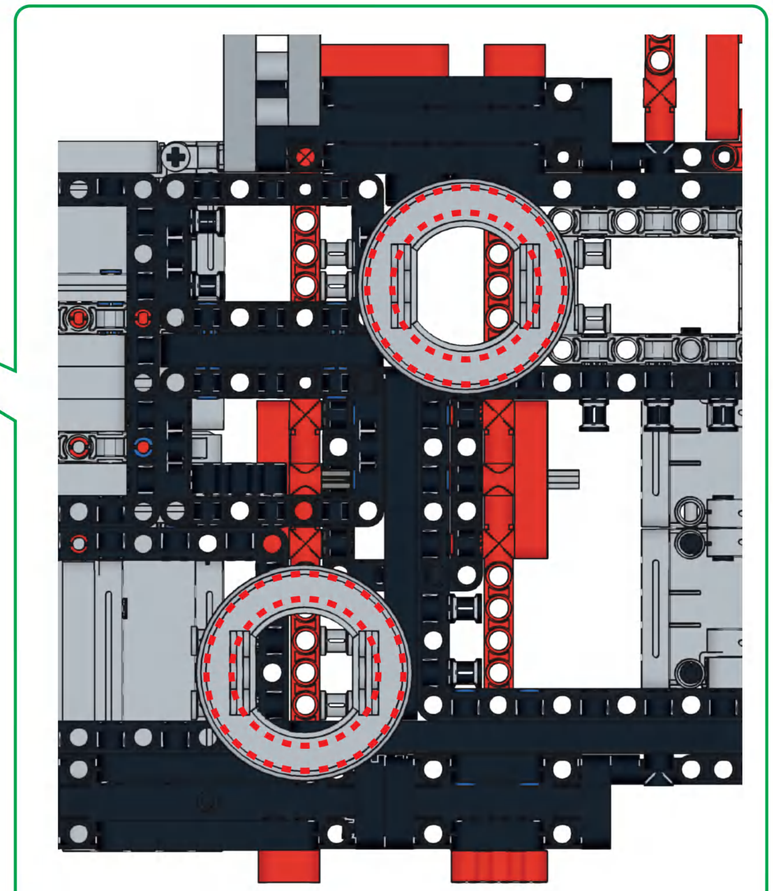

2

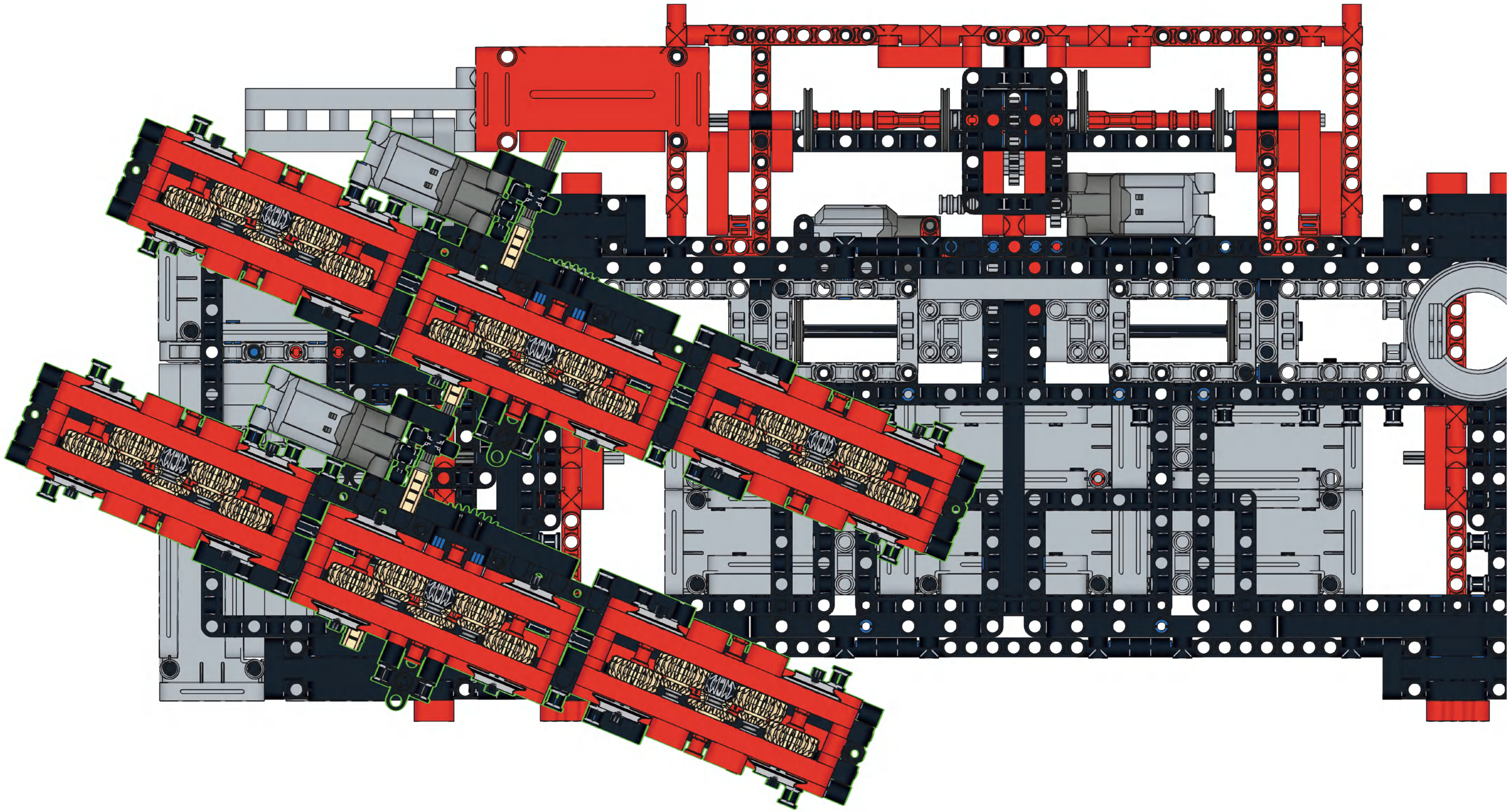

3

7

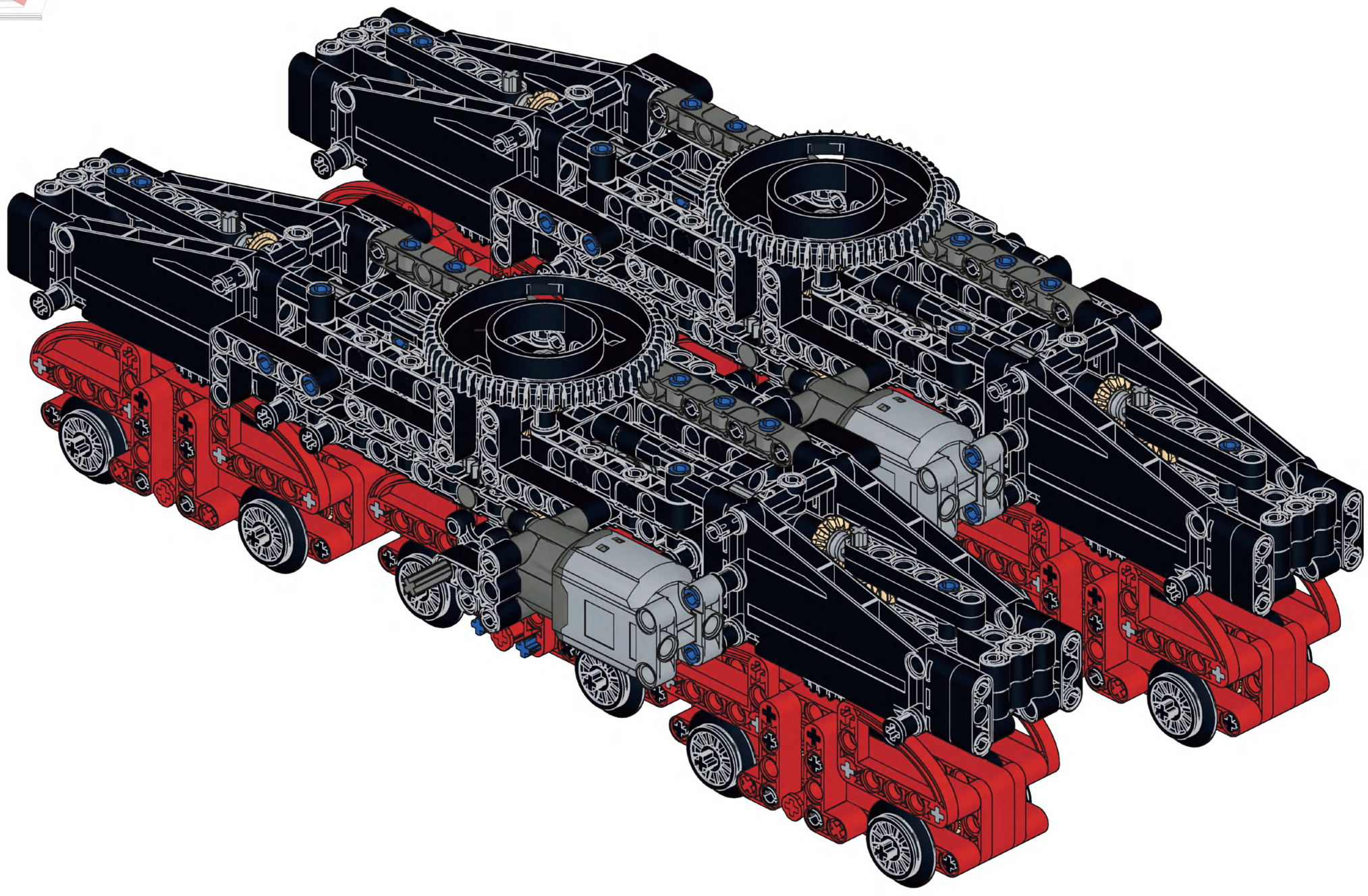

G

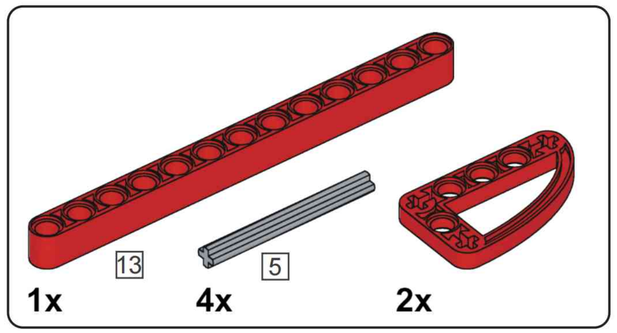

G1

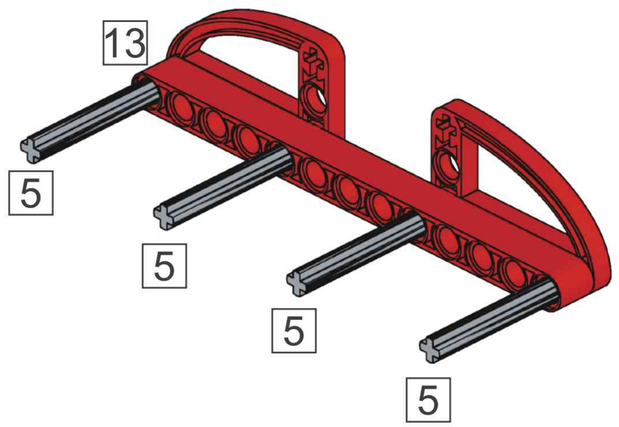

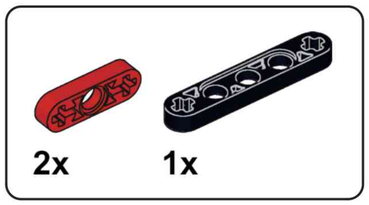

G2

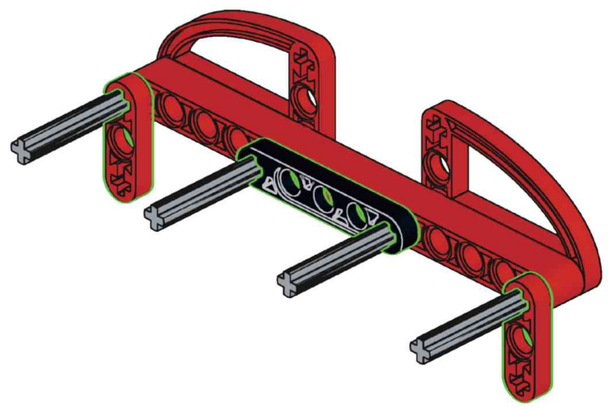

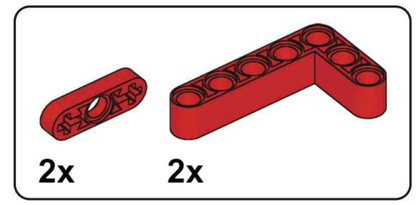

G3

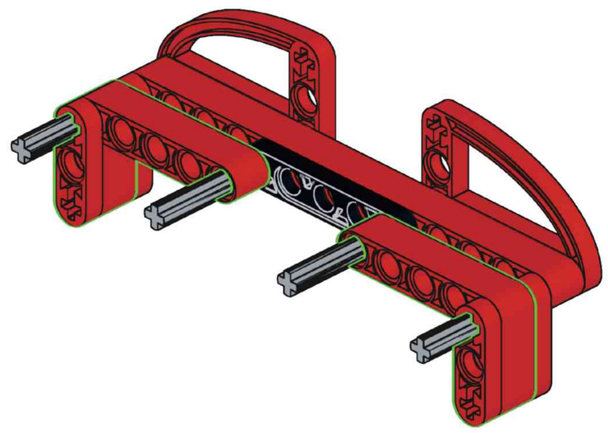

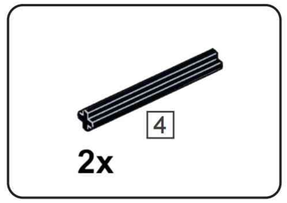

G4

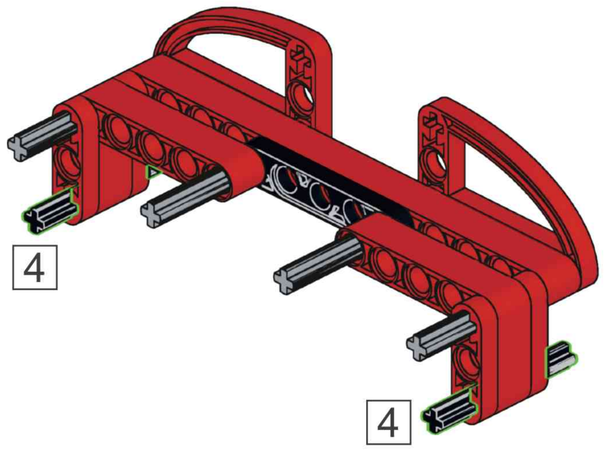

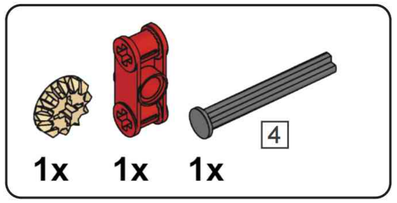

G5

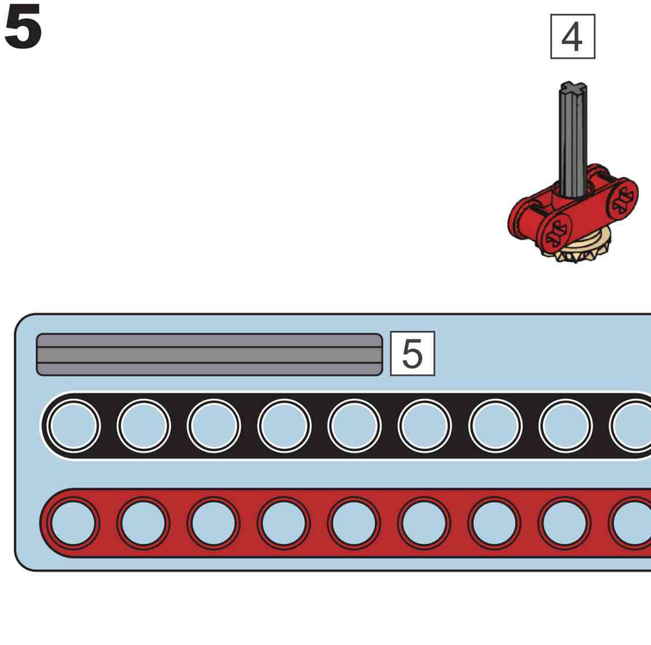

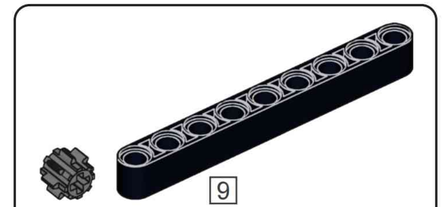

G6



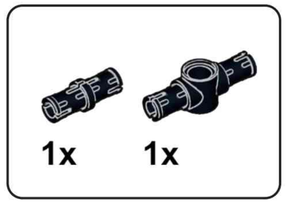

G7

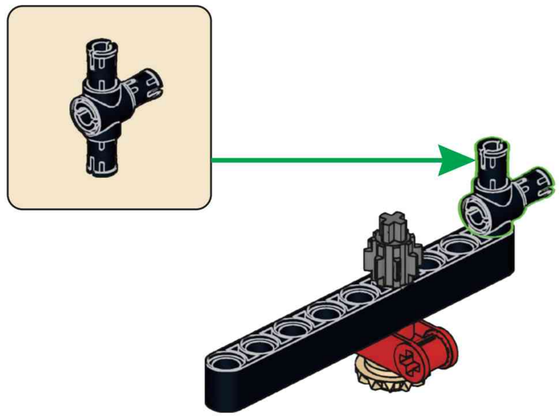

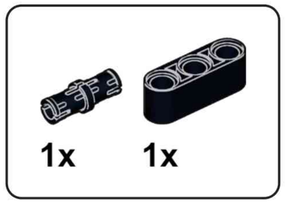

G8



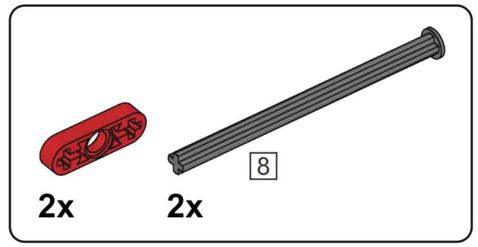

G9

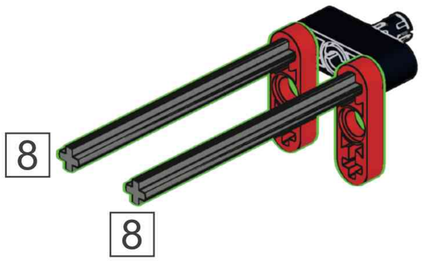

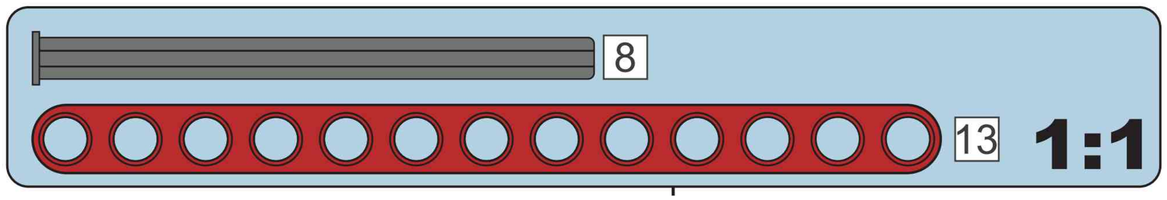

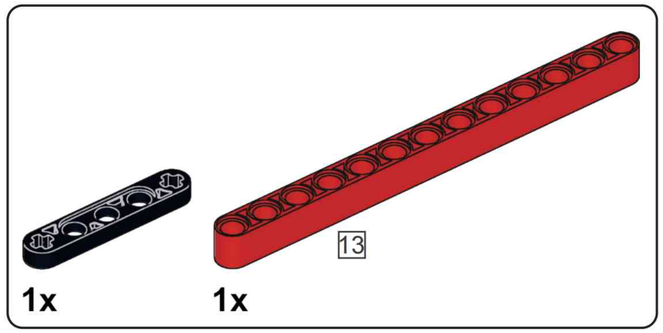

G10

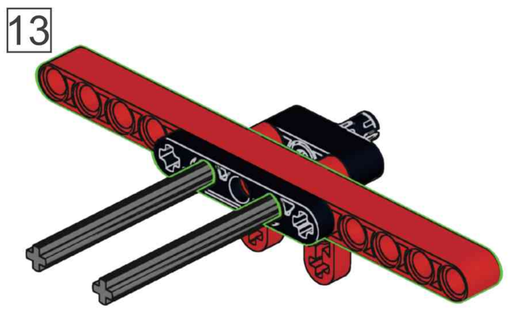

G11

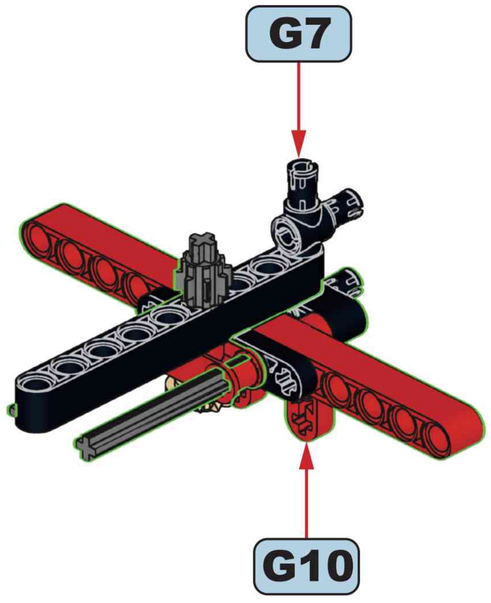

1x

G12

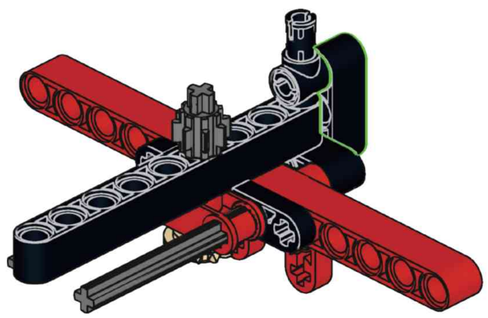

2x 1x 13

G13

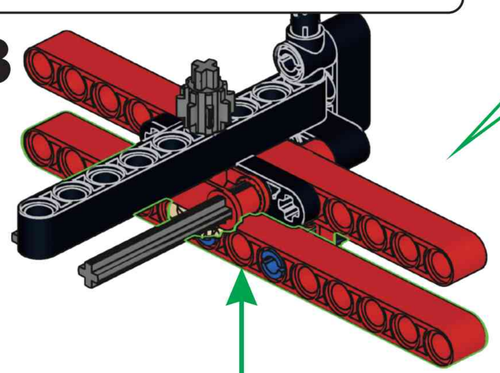

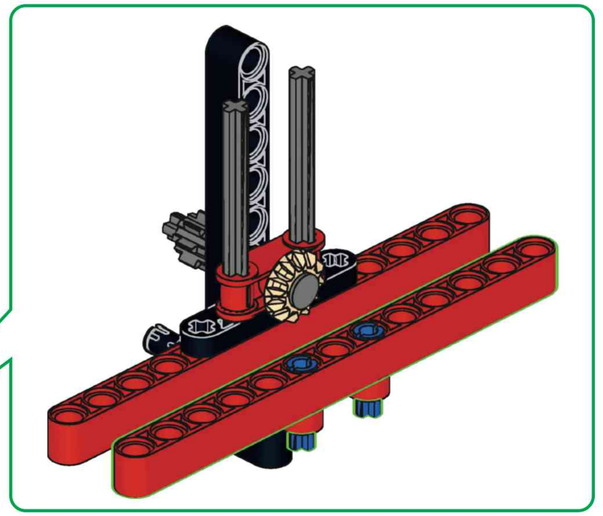

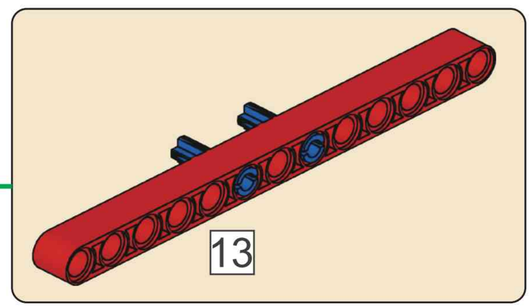

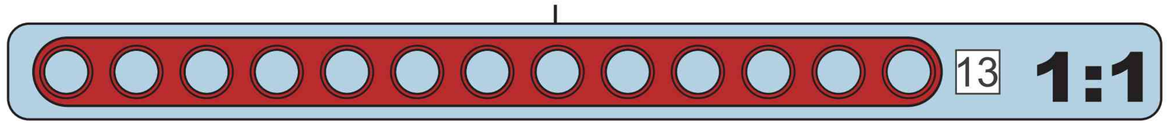

1x

G14

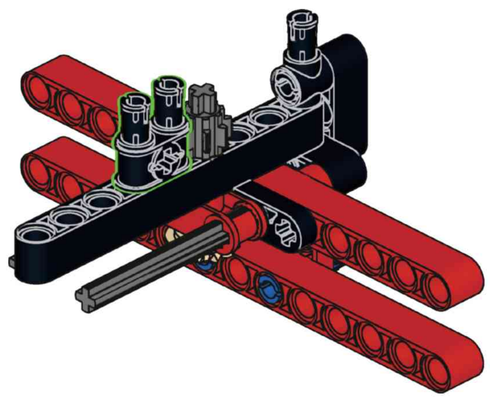

G15

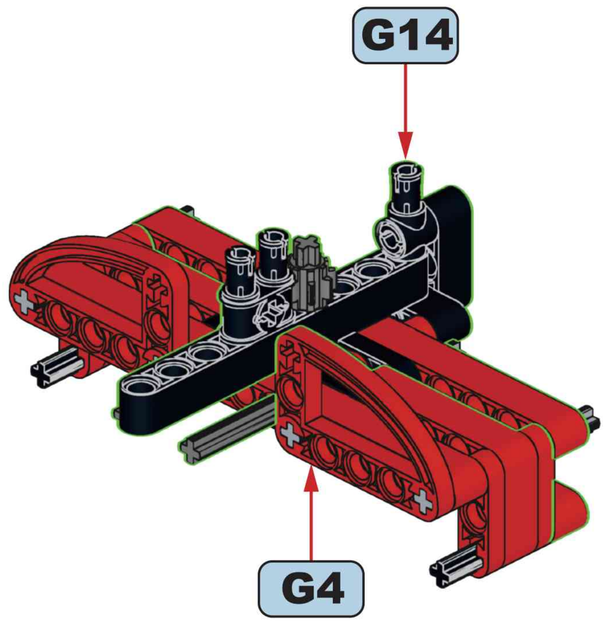

2x 1x 13

G16

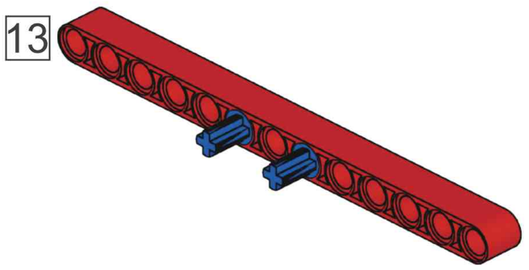

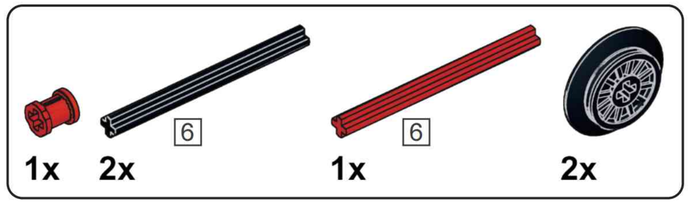

G17

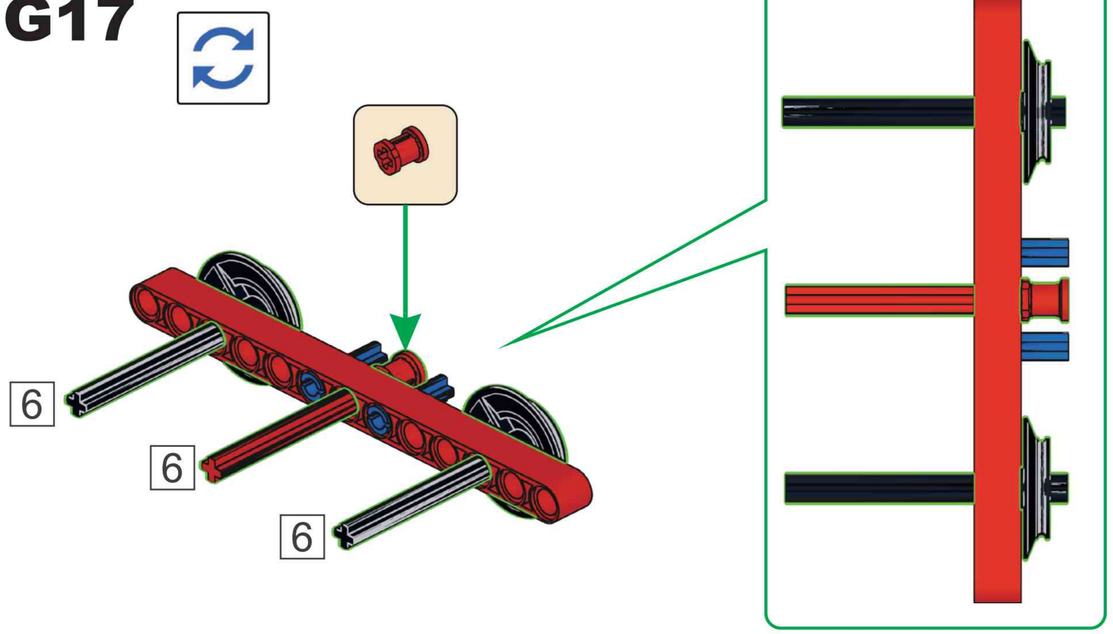

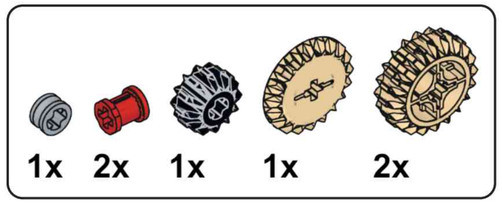

G18

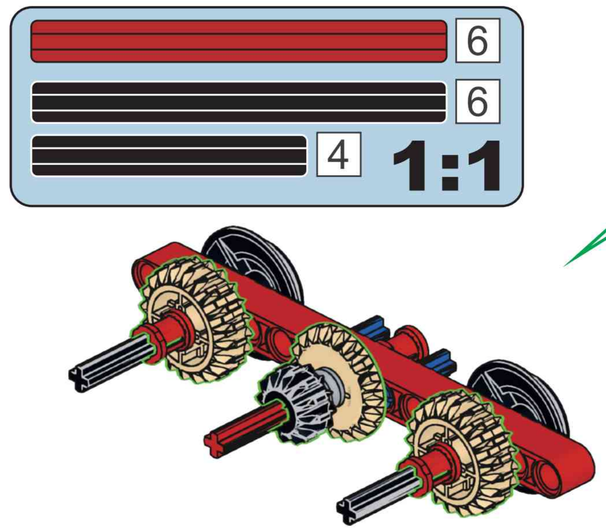

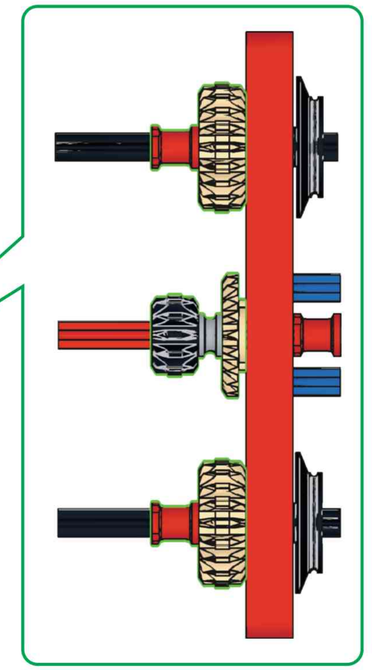

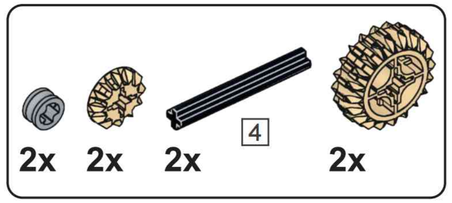

G19

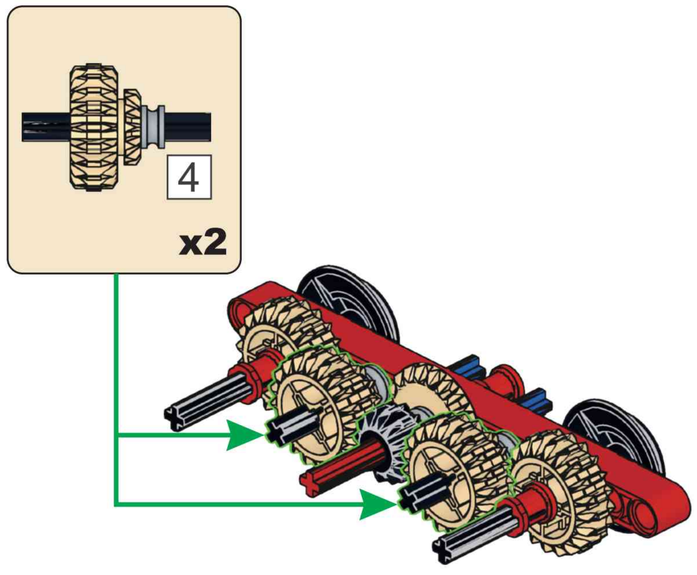

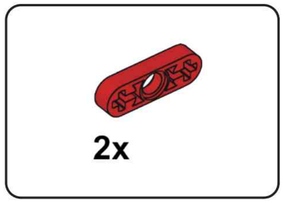

G20

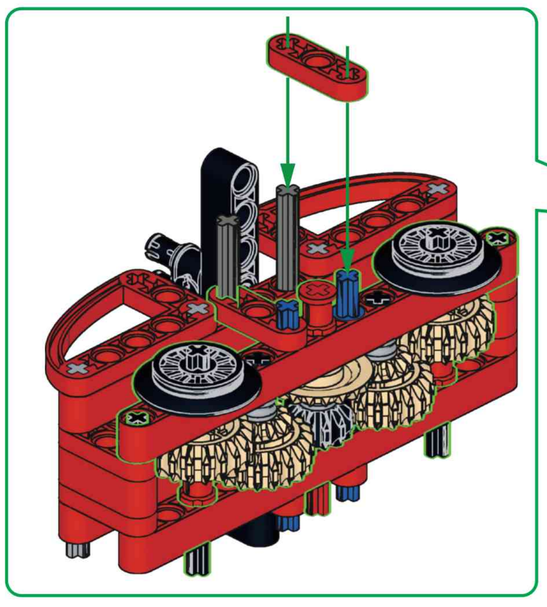

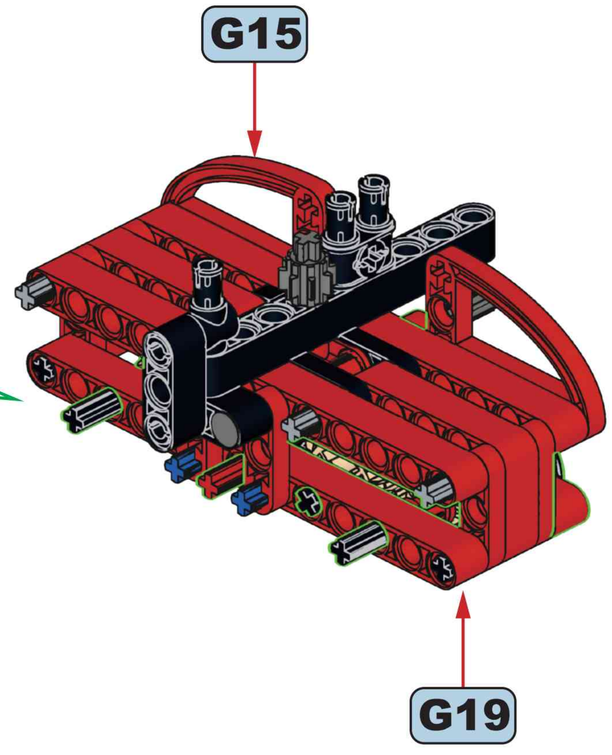

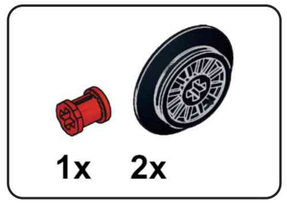

G21

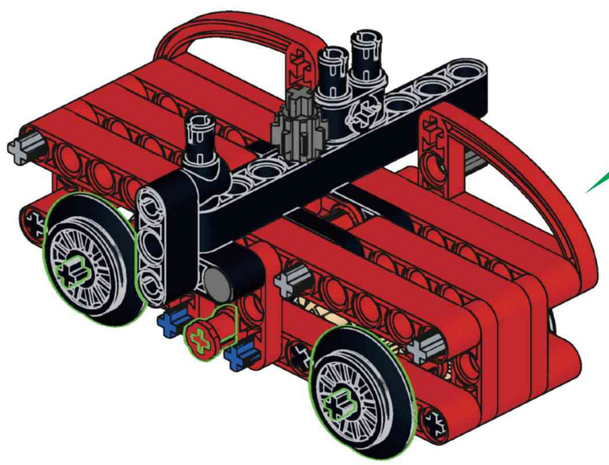

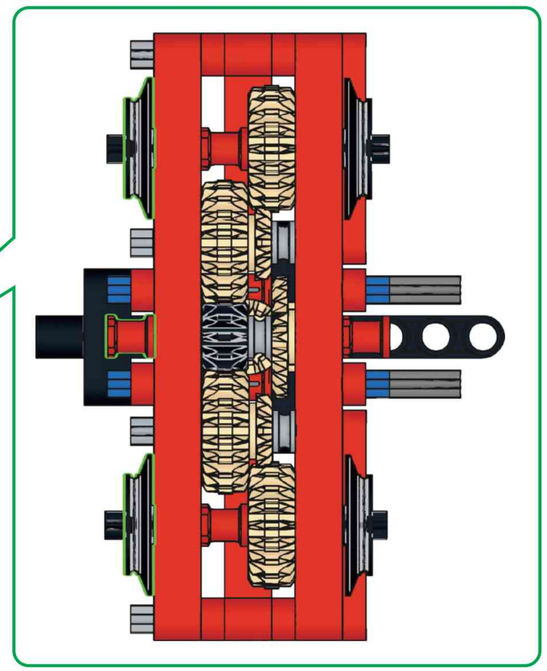

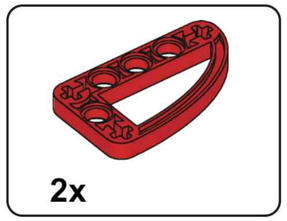

G22

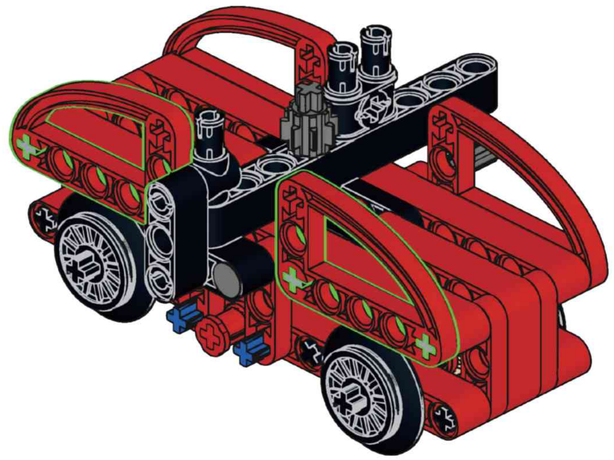

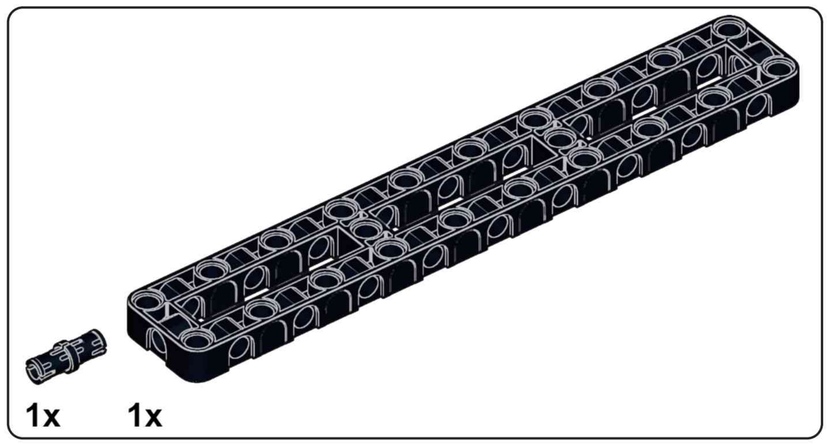

G23

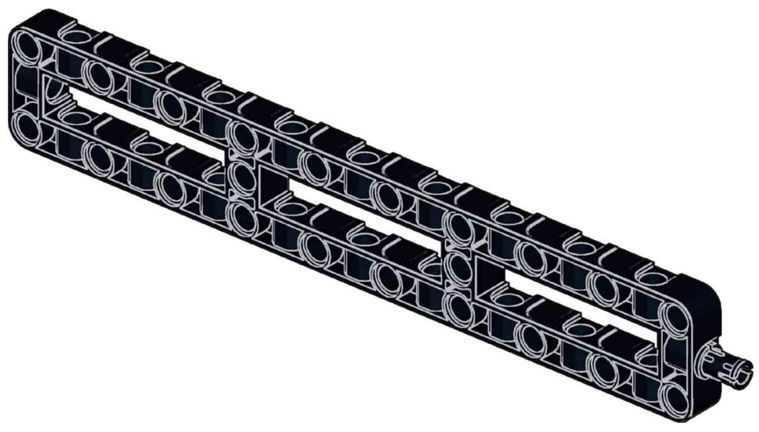

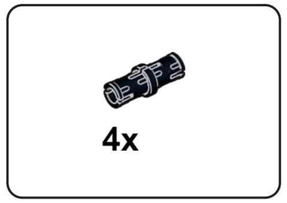

G24

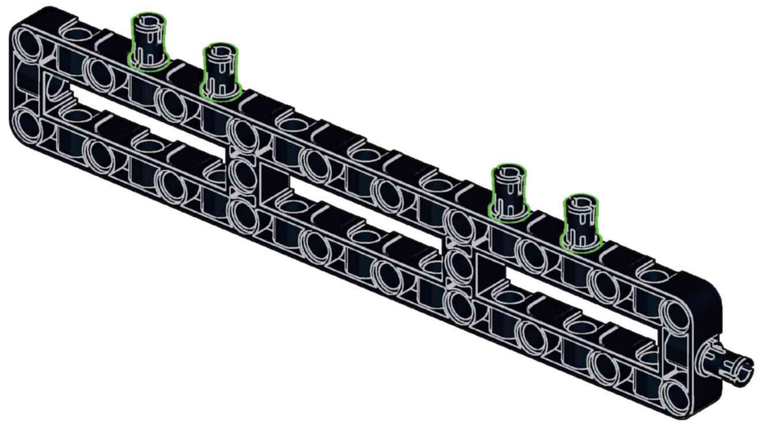

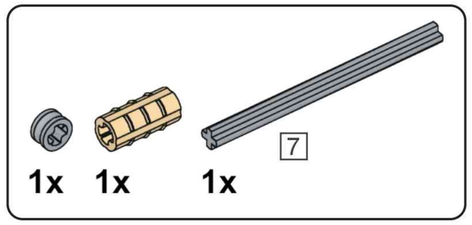

G25

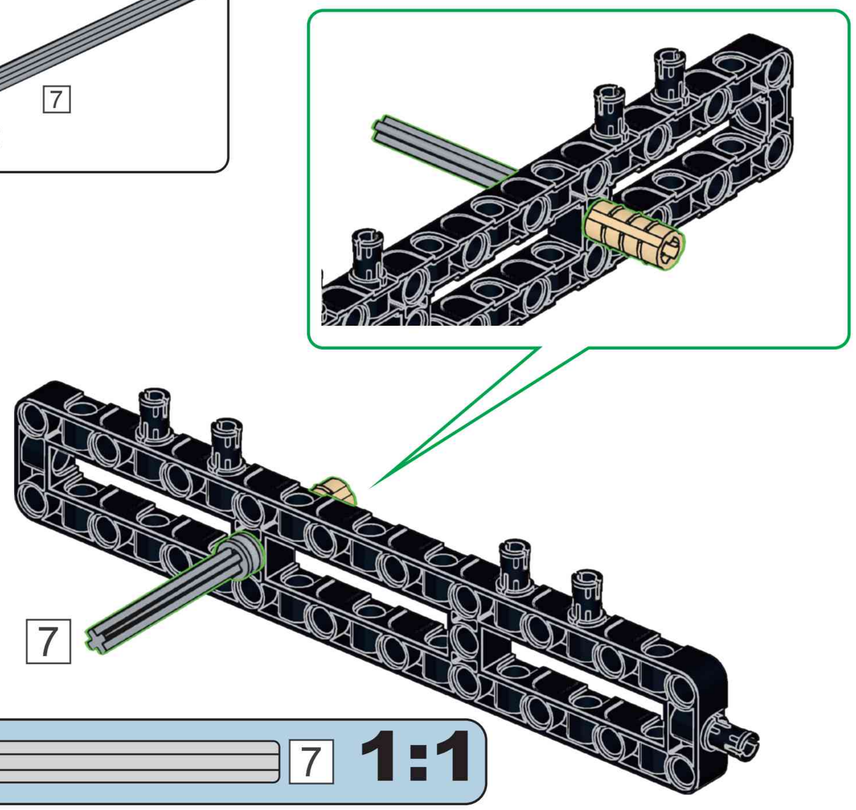

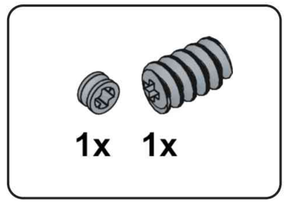

G26

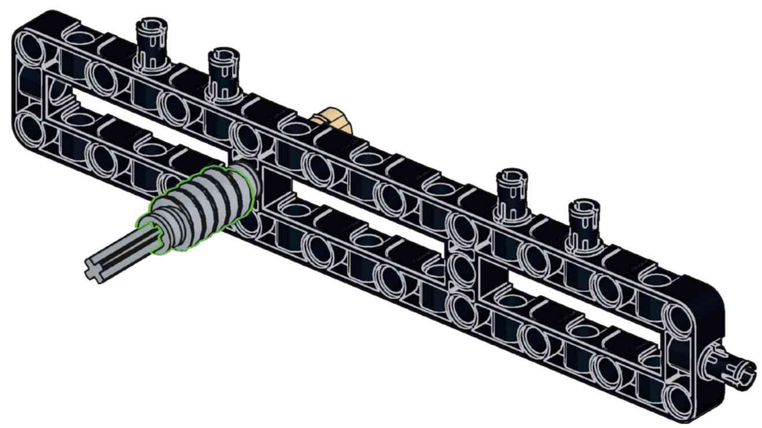

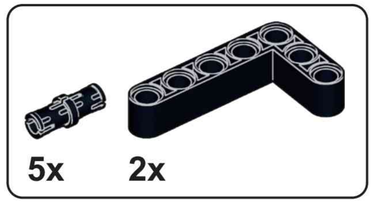

G27

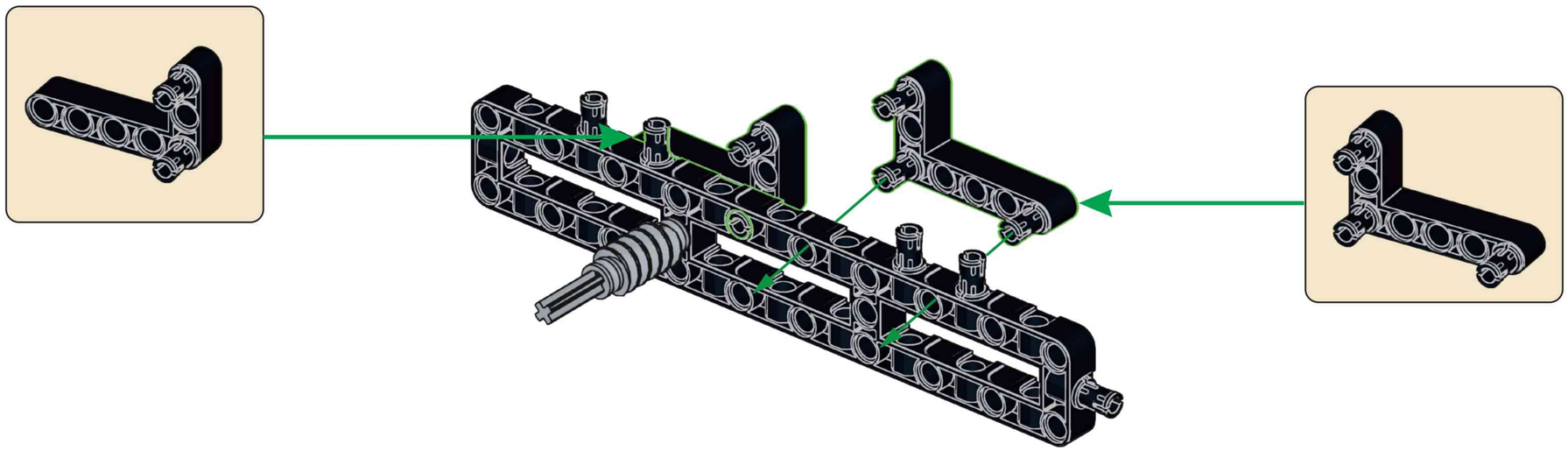

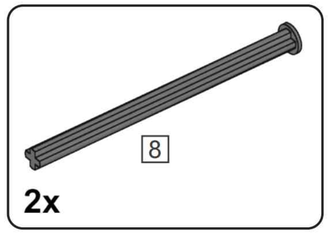

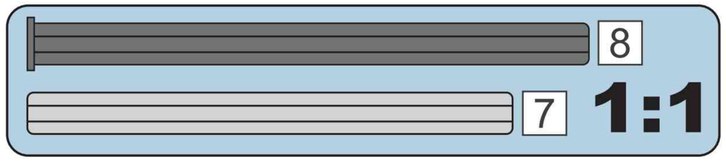

G28

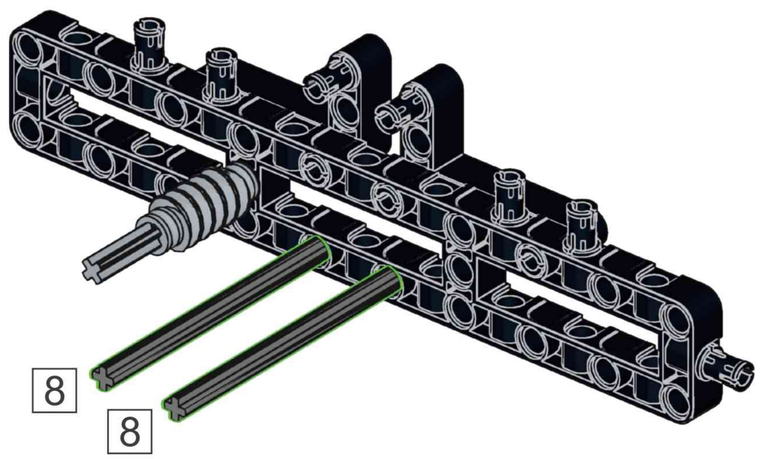

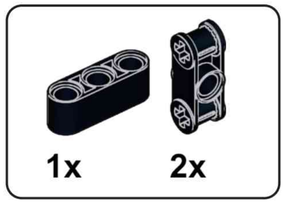

G29

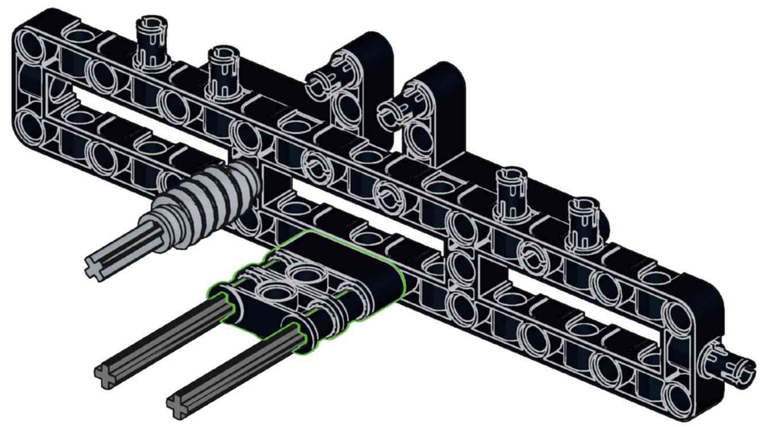

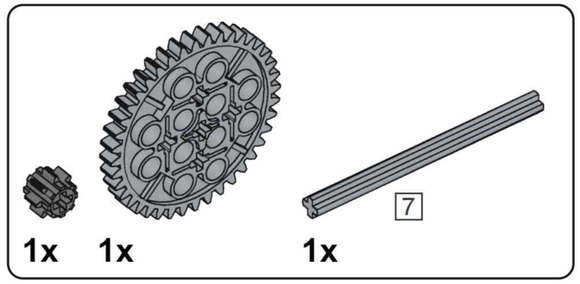

G30

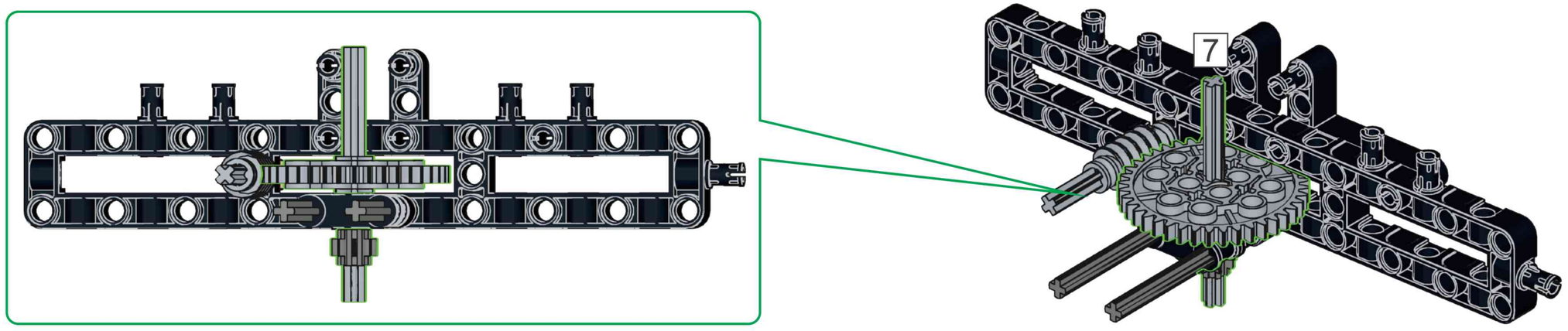

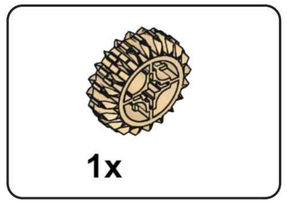

G31

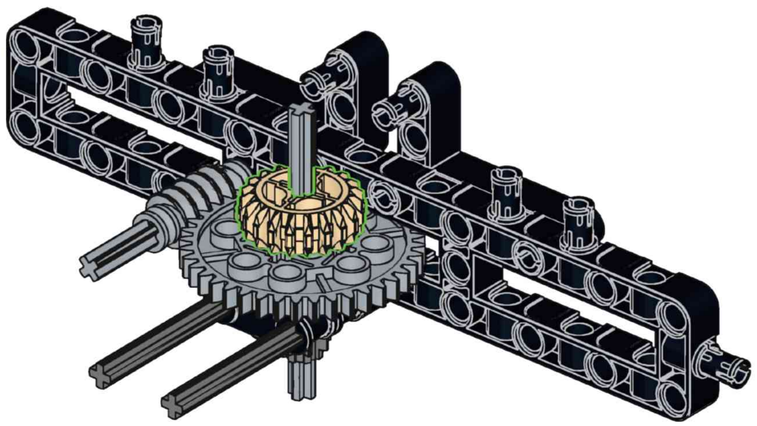

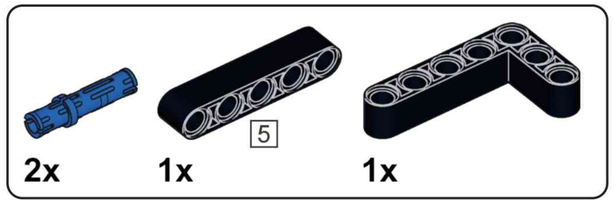

G32

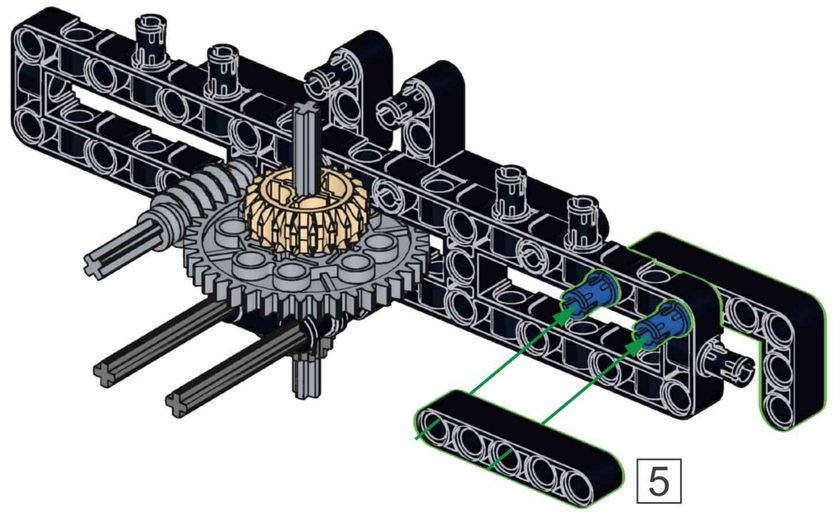

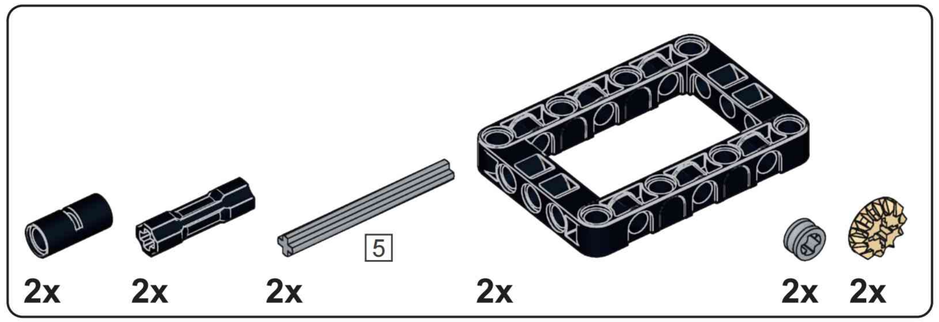

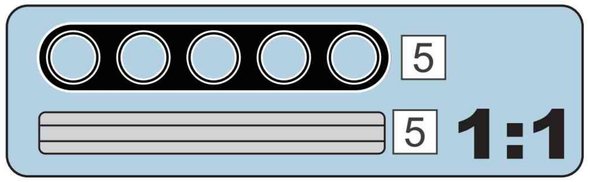

G33

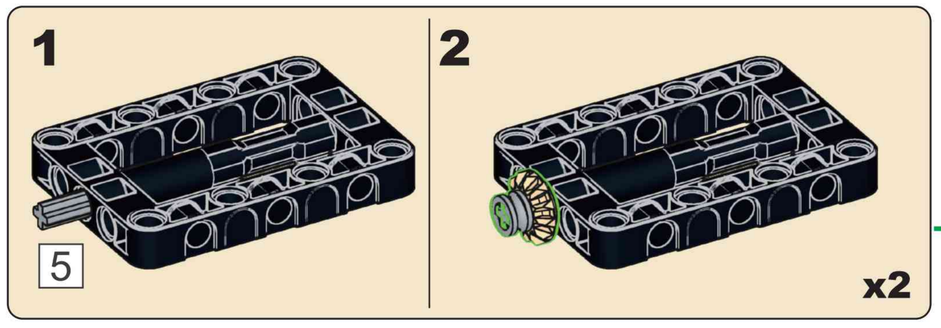

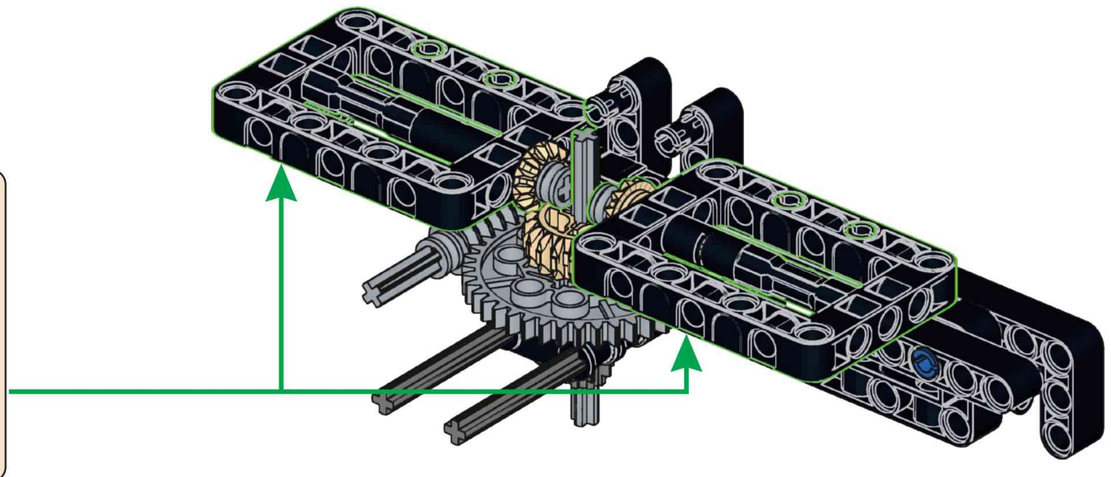

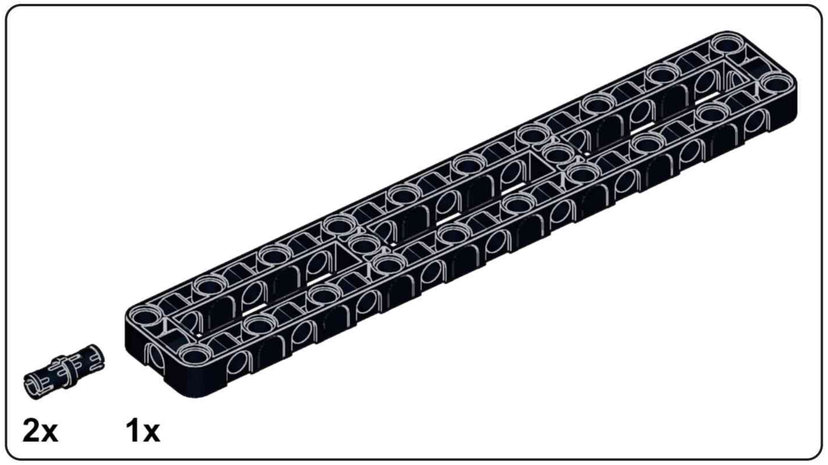

G34



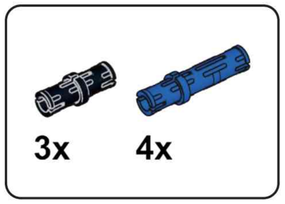

G35

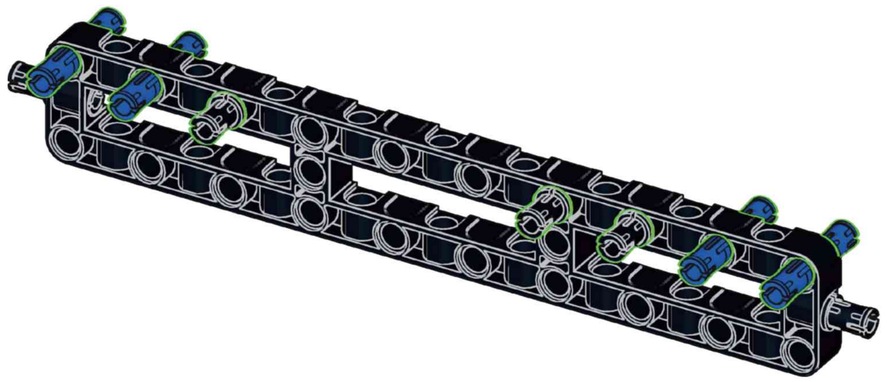

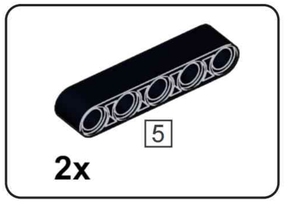

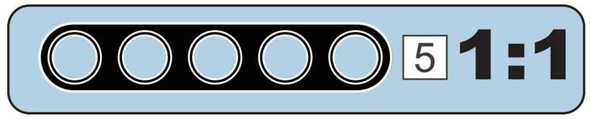

G36

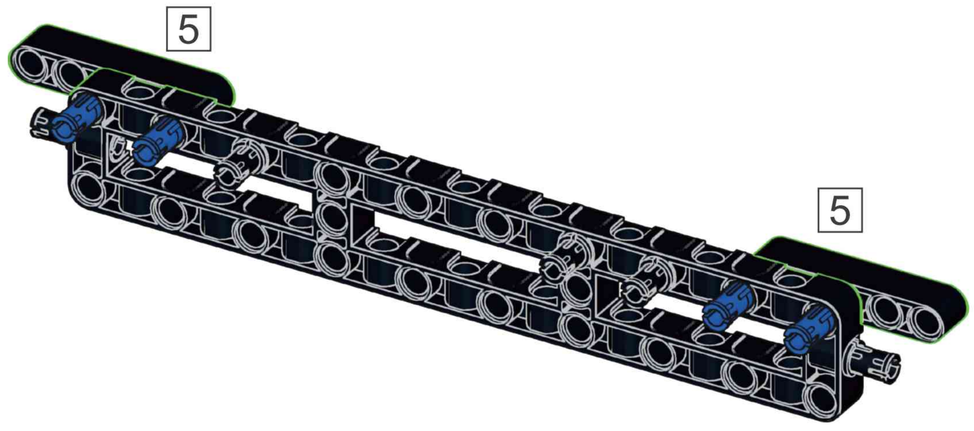

G37

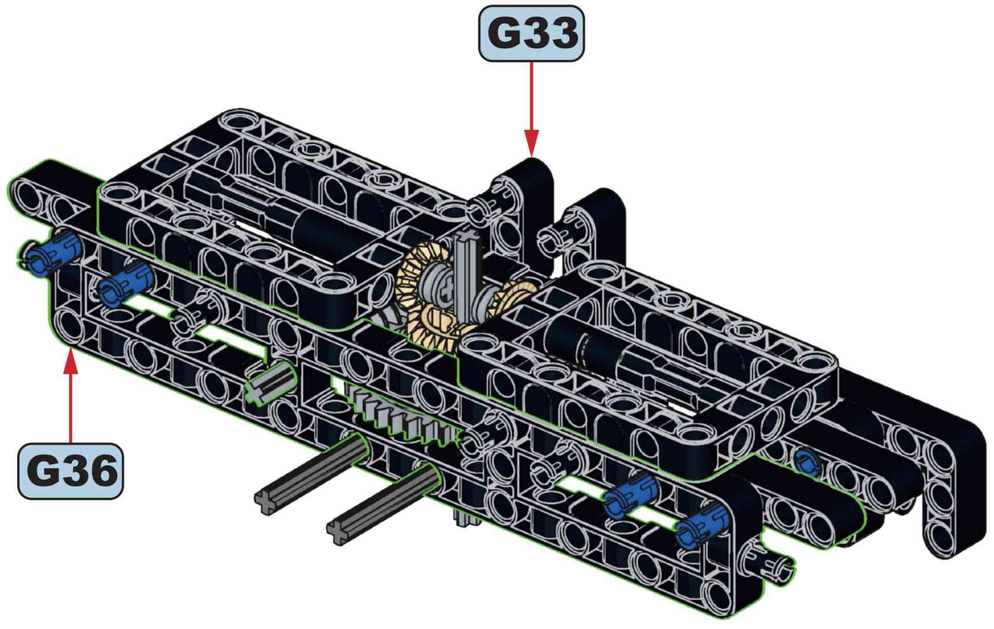

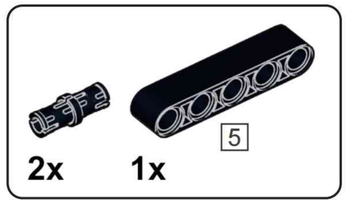

G38

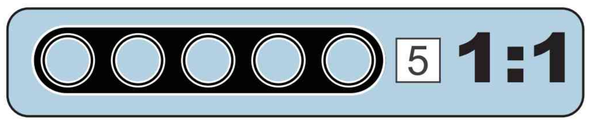

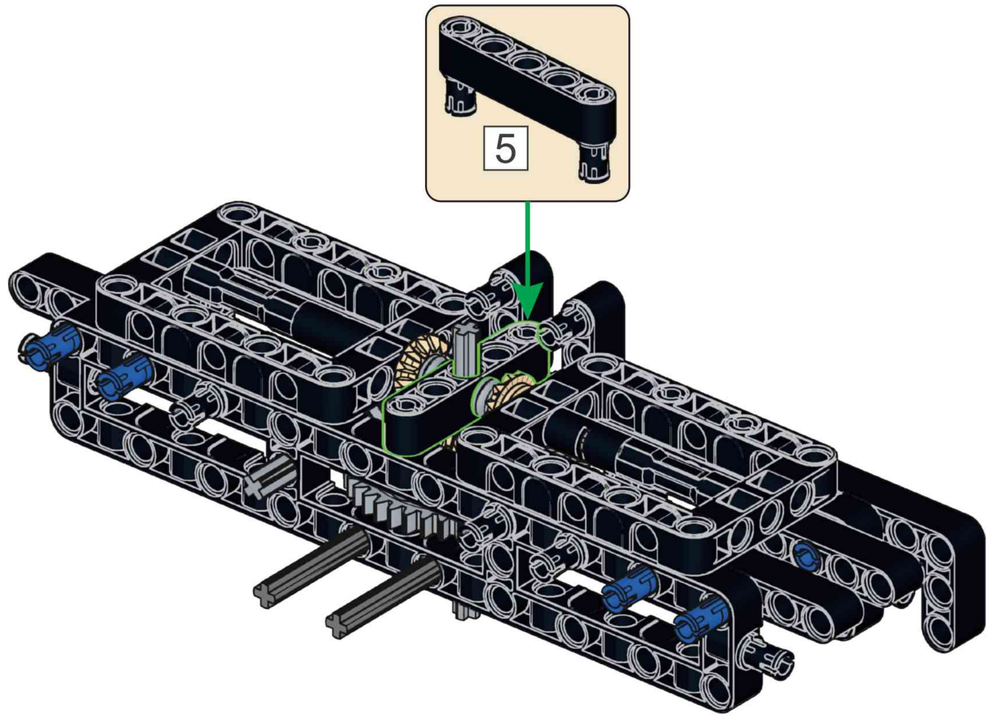

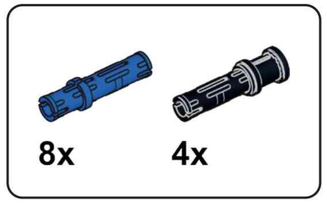

G39

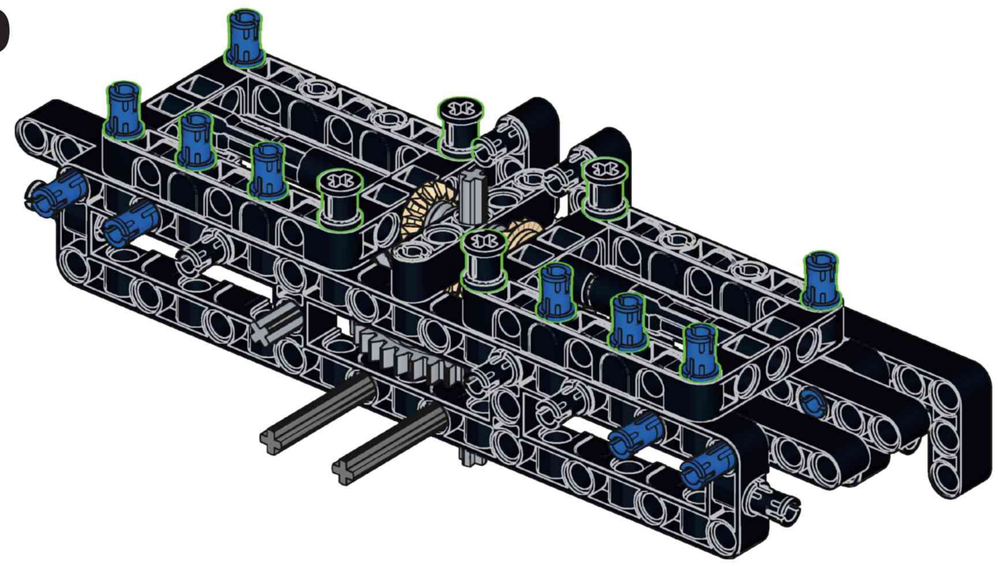

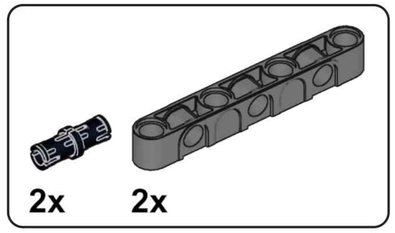

G40

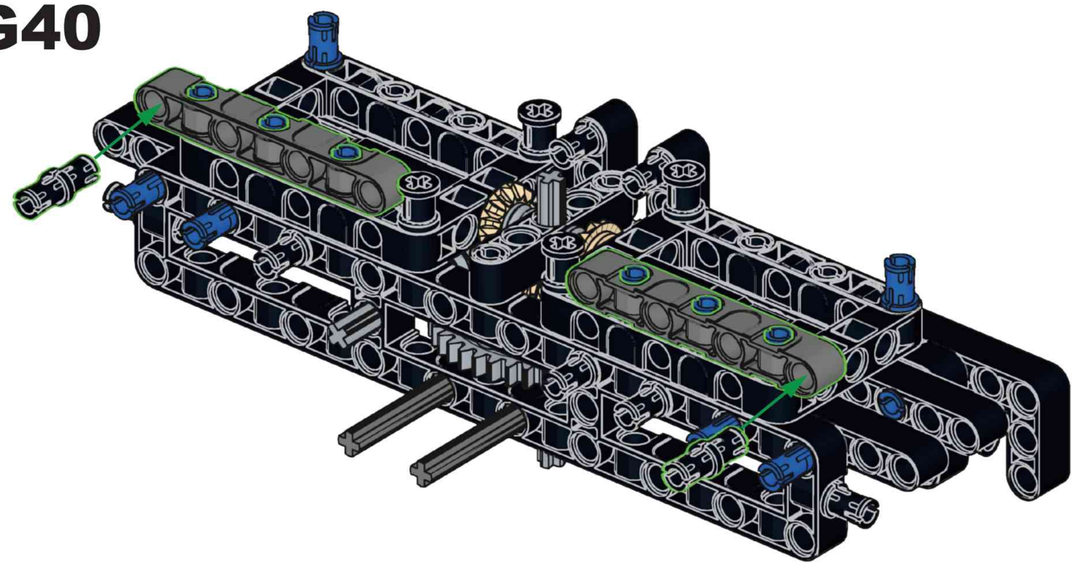

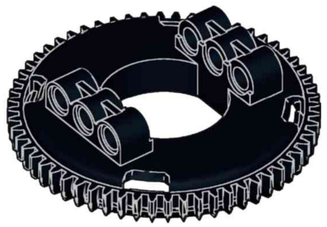

1x

G41

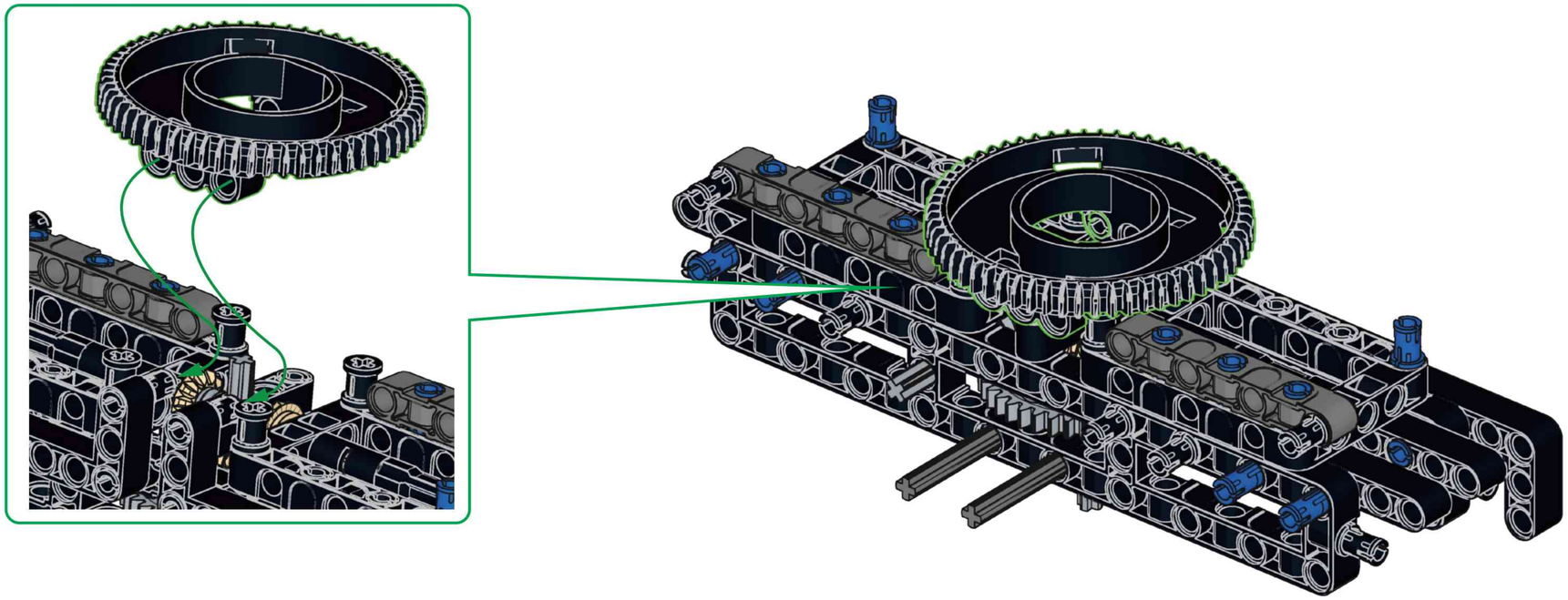

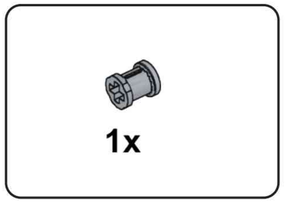

1x

G42

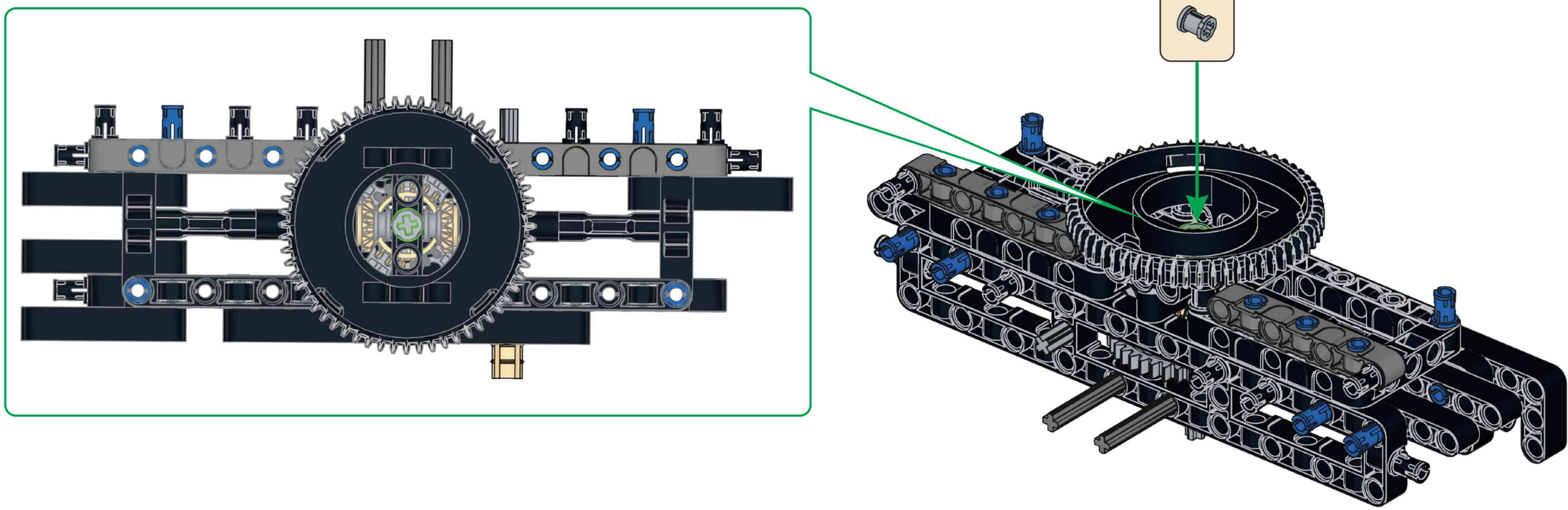

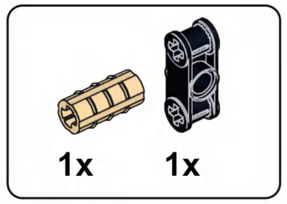

G43

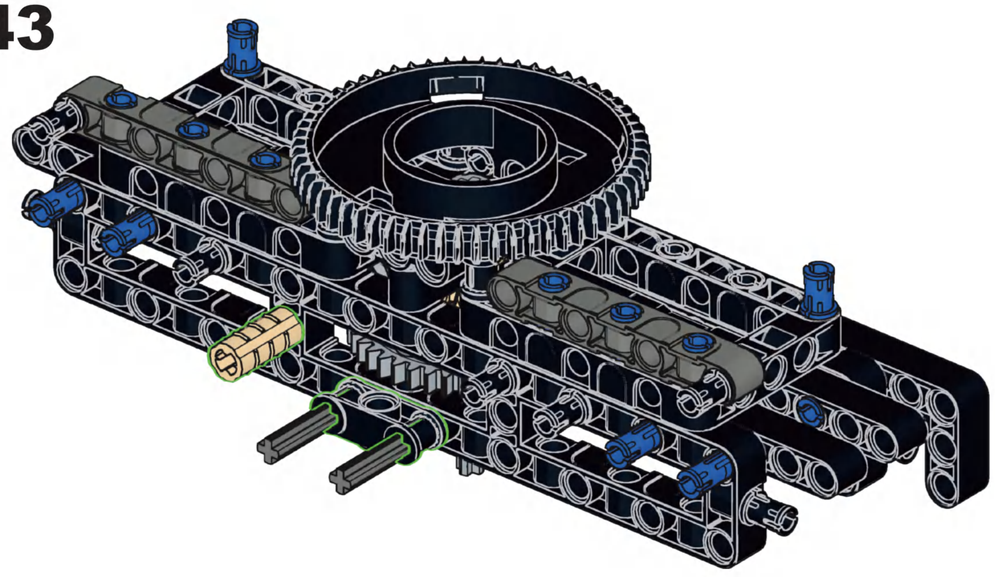

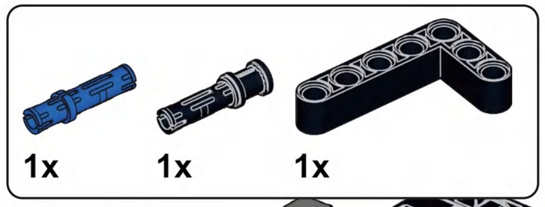

G44

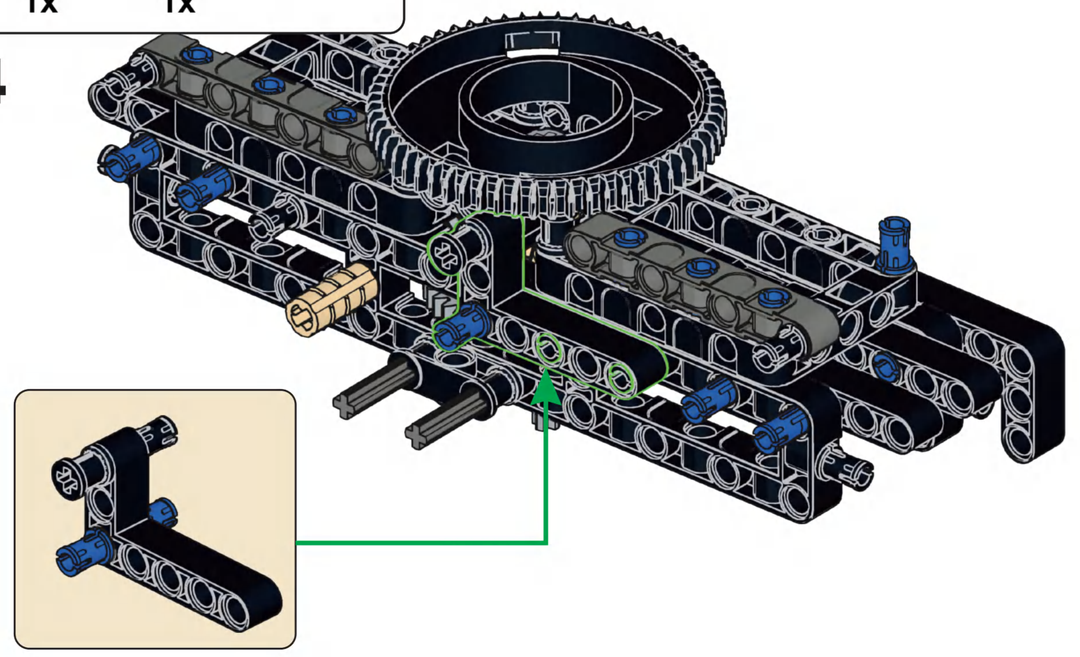

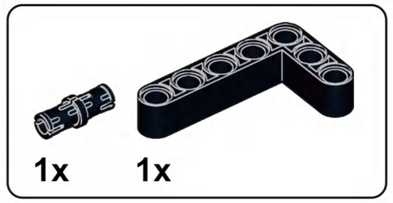

G45

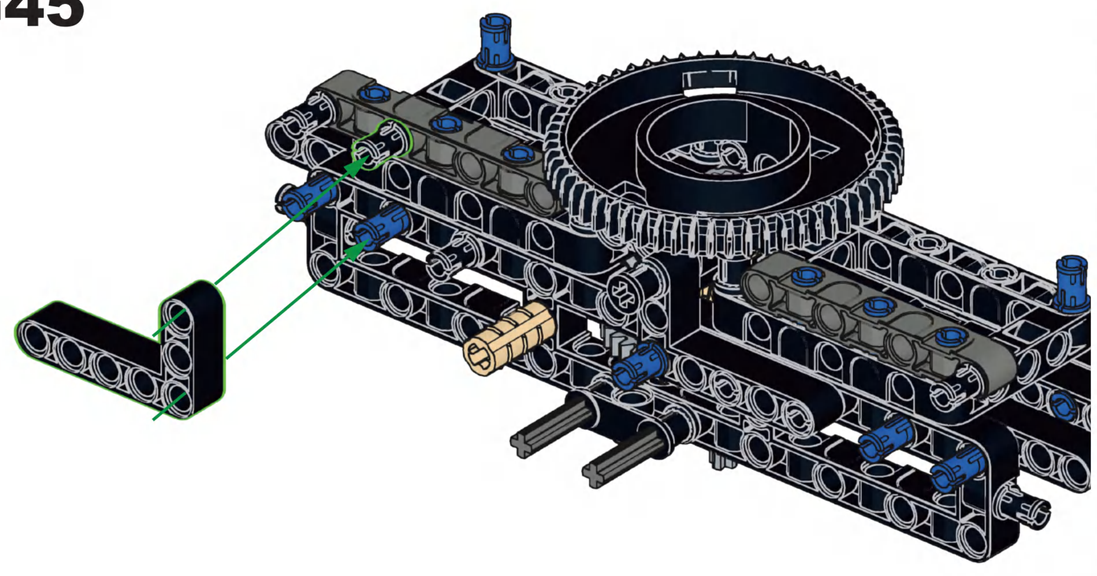

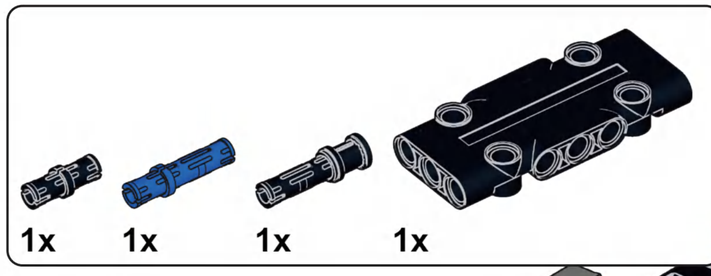

G46

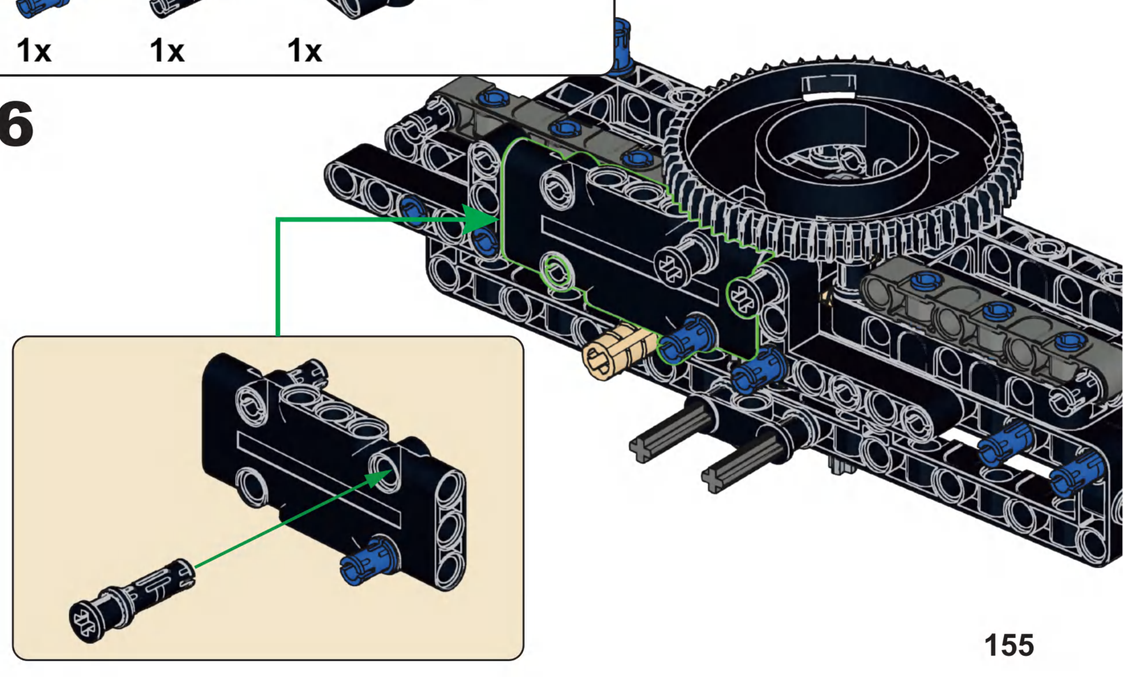

2x 2x

x2

G47

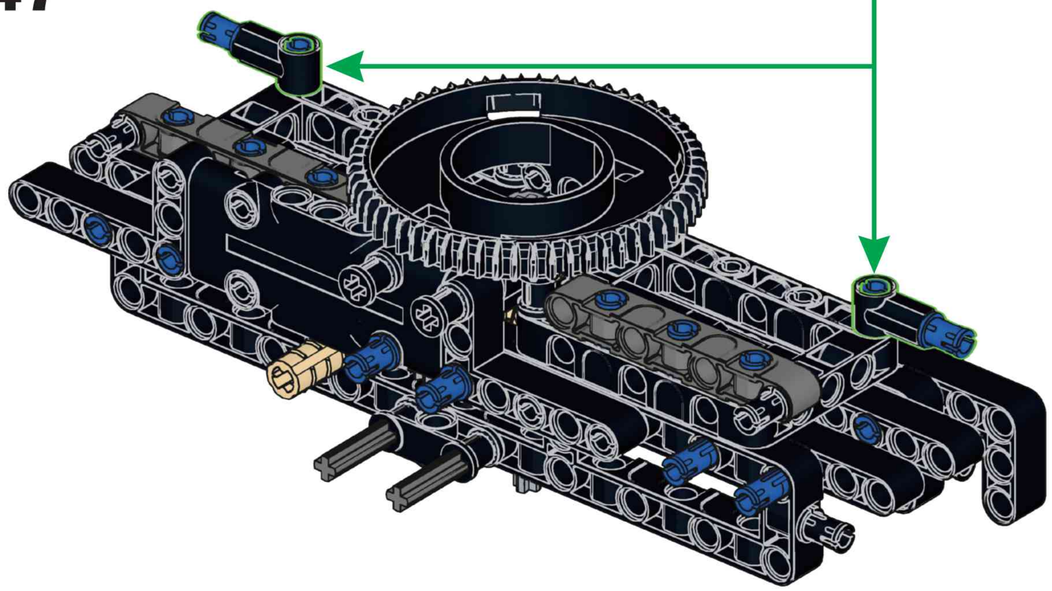

3x 1x

13

G48



13

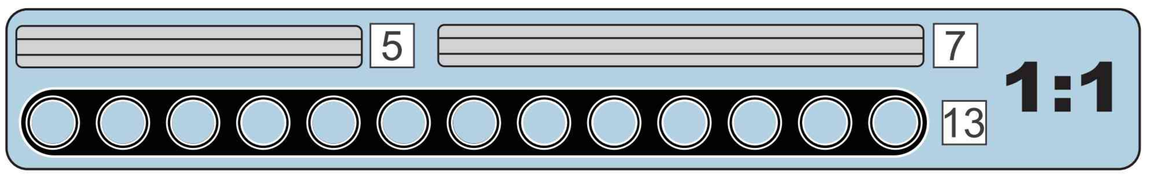

1x 1x 1x

G49

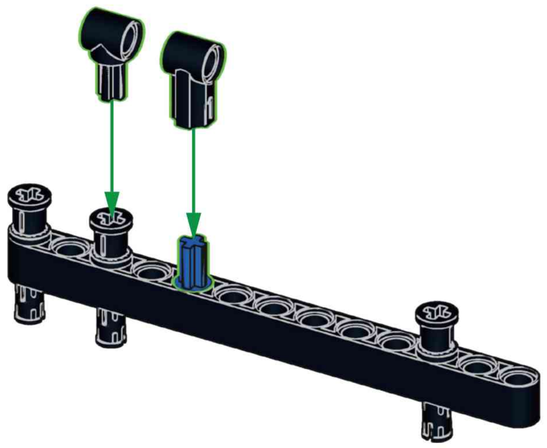

1x 1x 1x 1x

7

G50

7

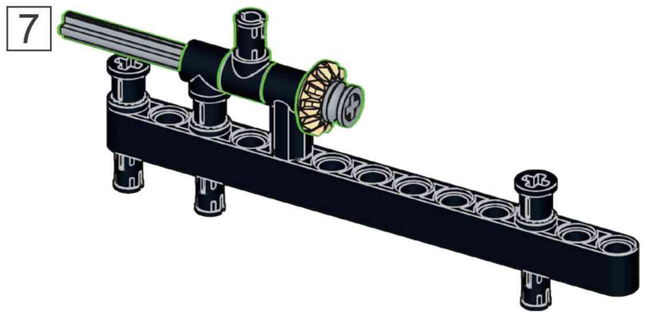

1x 1x

5

G51

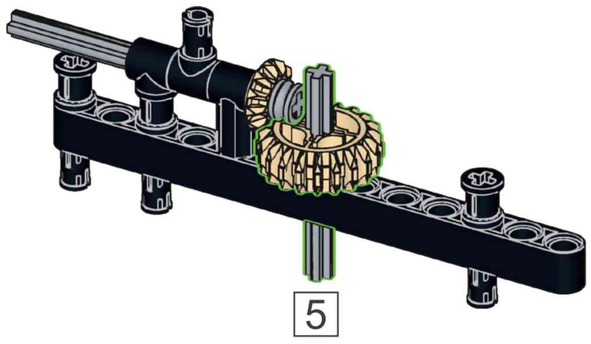

5

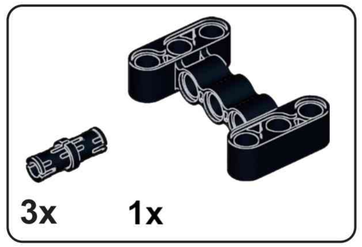

G52

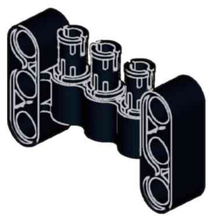

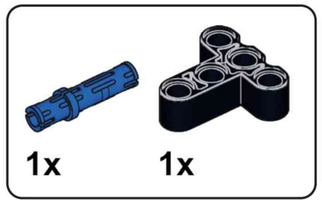

G53

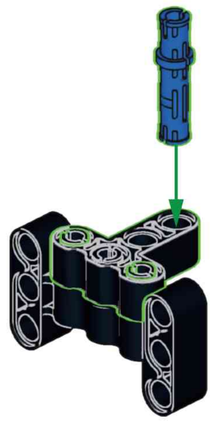

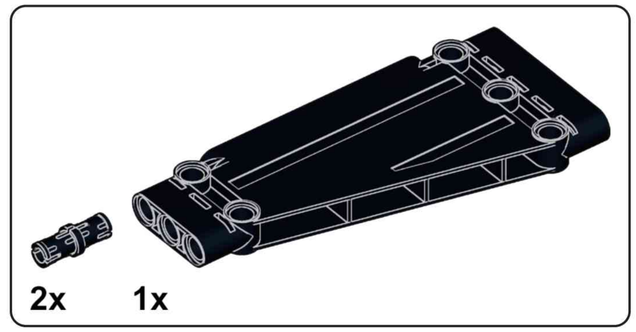

G54

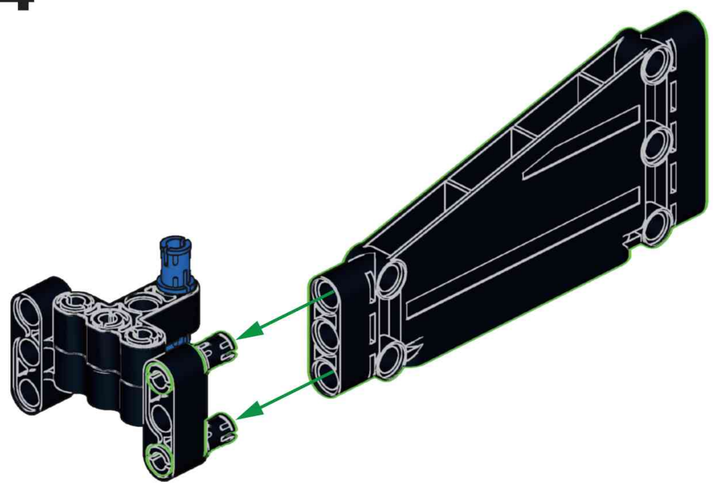

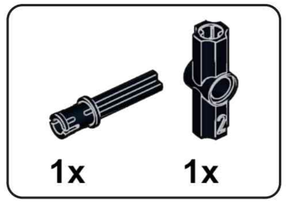

G55

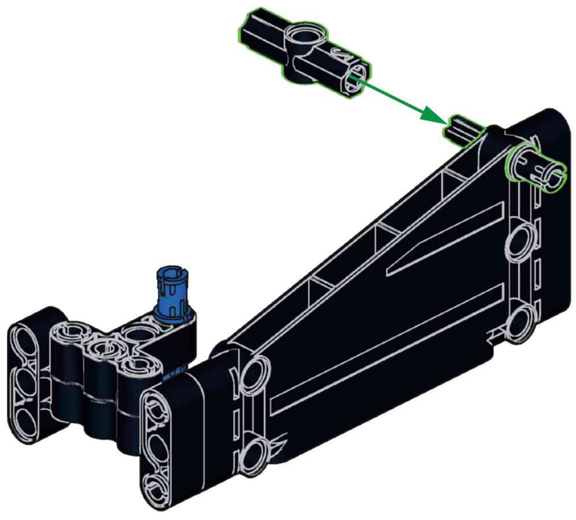

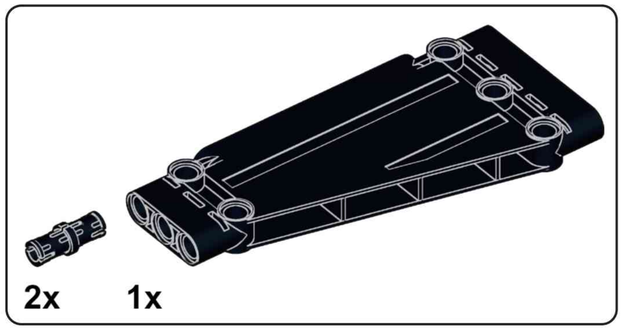

G56



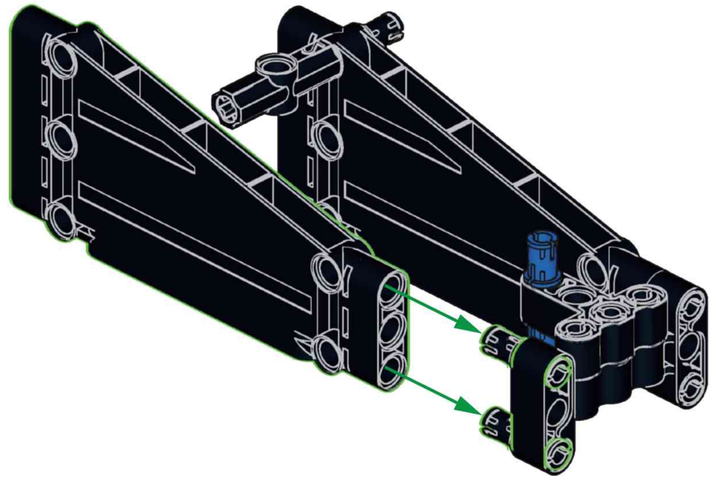

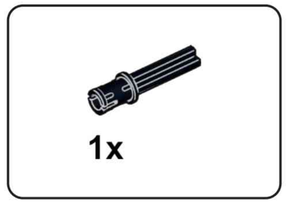

G57

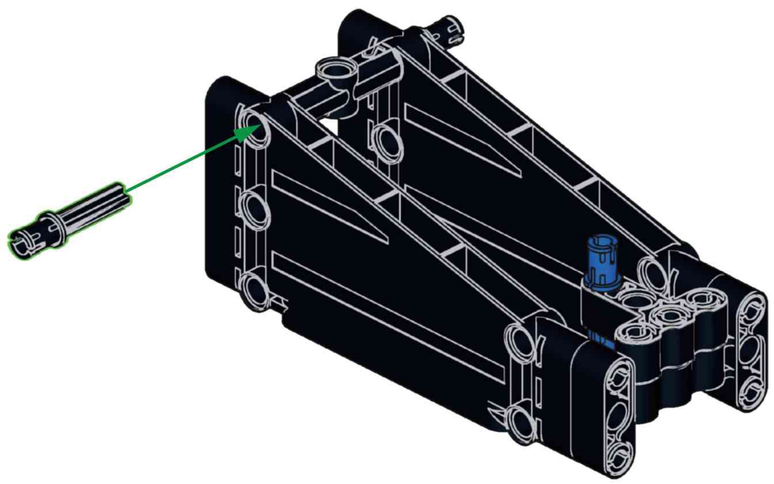

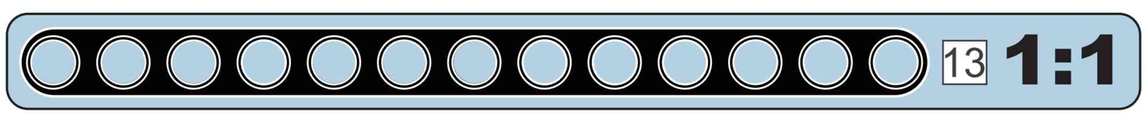

G58

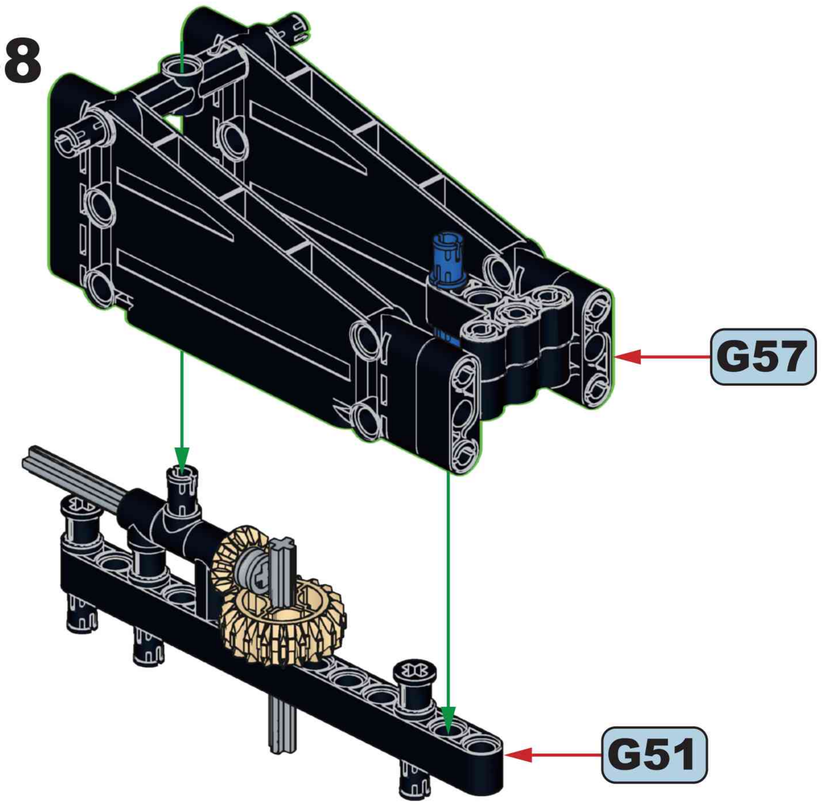

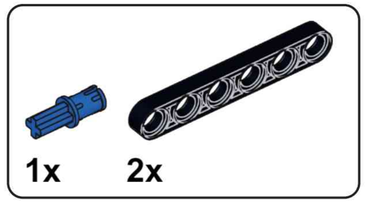

G59

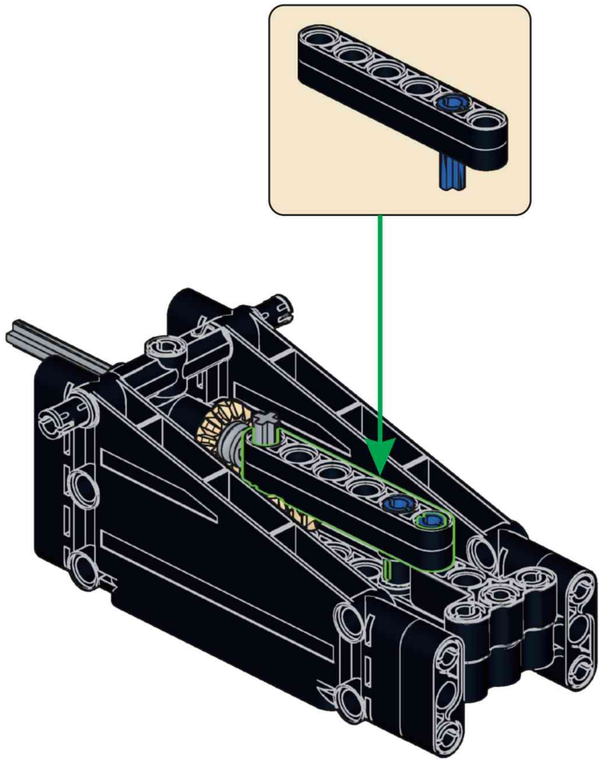

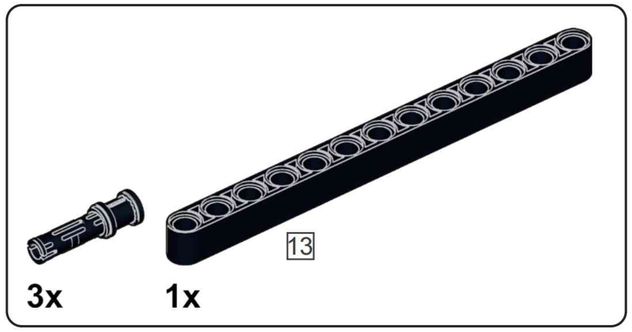

G60

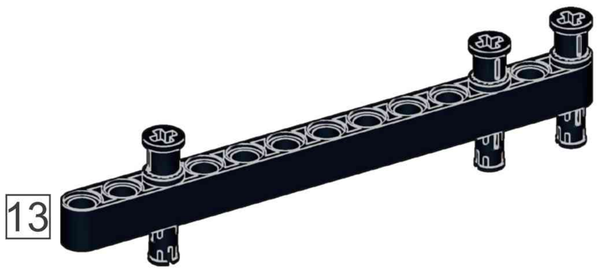

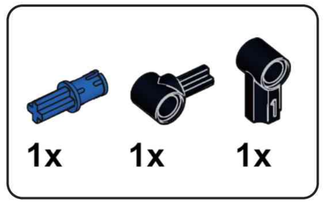

G61

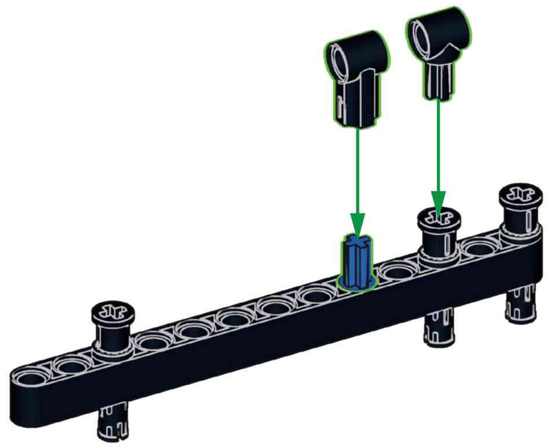



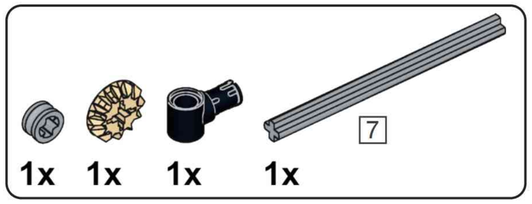

G62

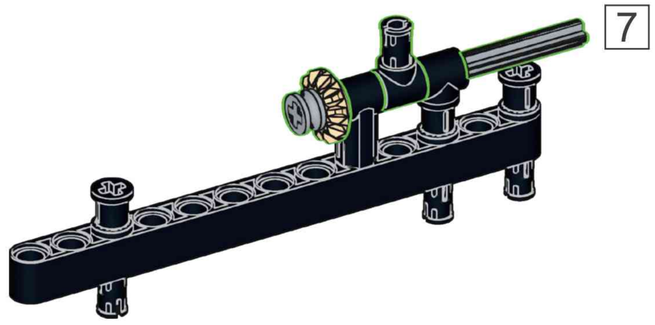

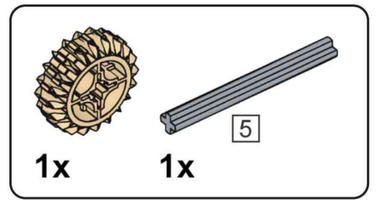

G63

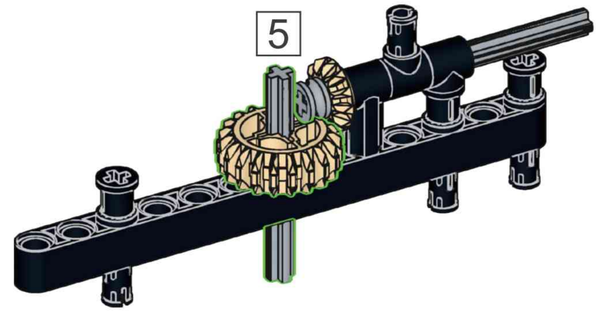

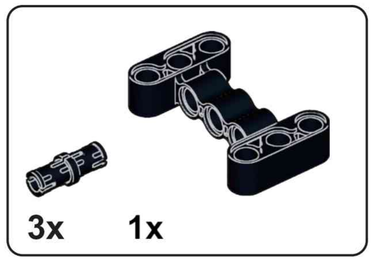

G64



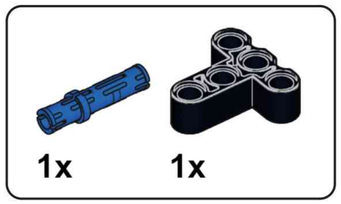

G65

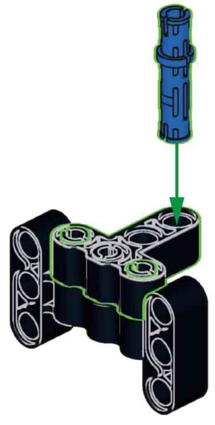

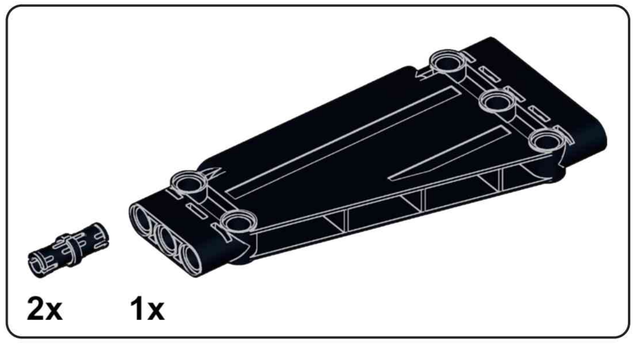

G66

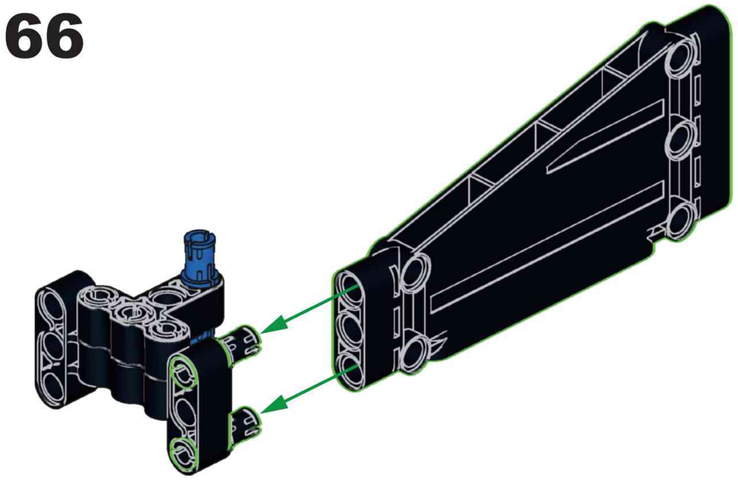

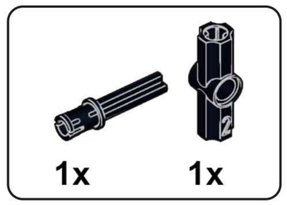

G67

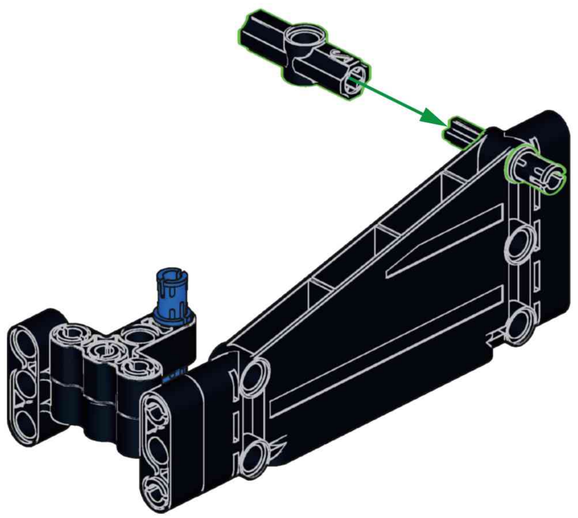

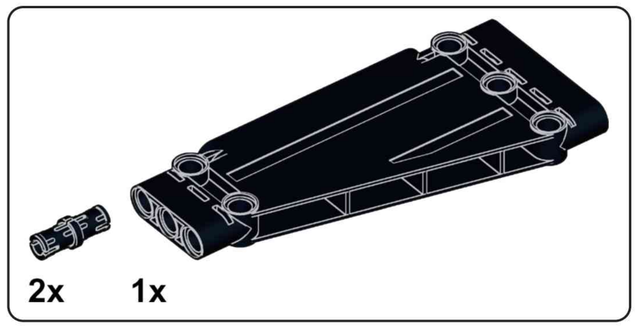

G68

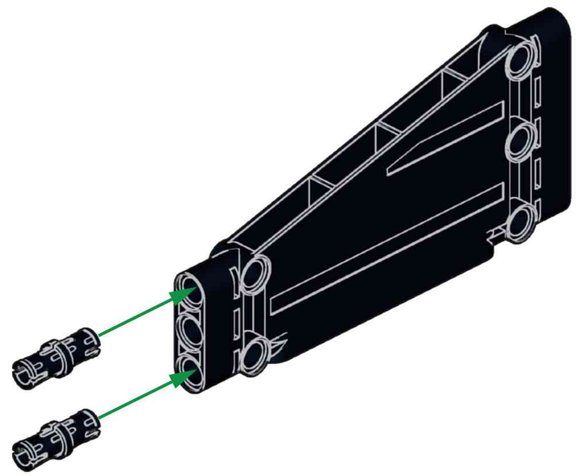

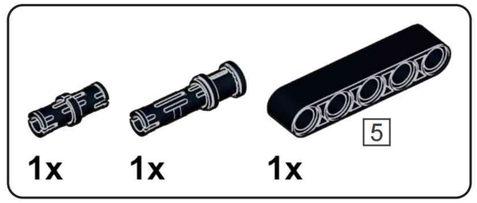

G69

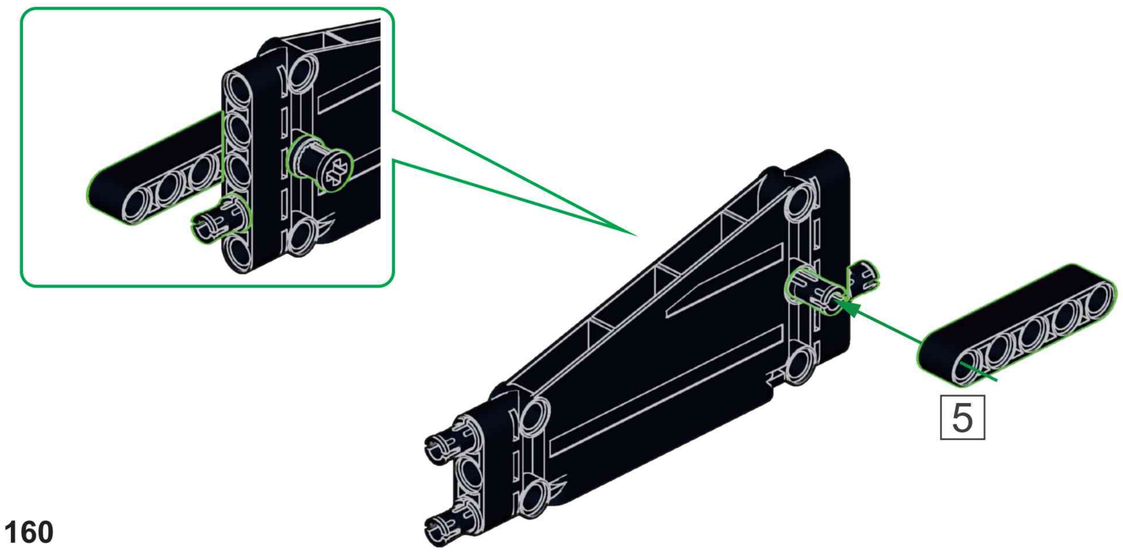

G70

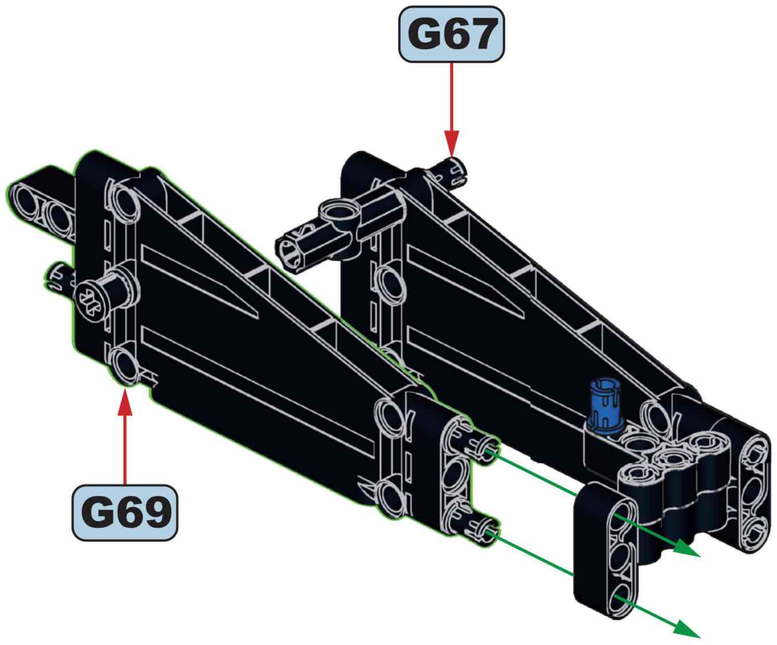

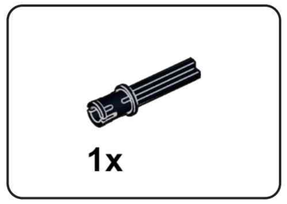

G71

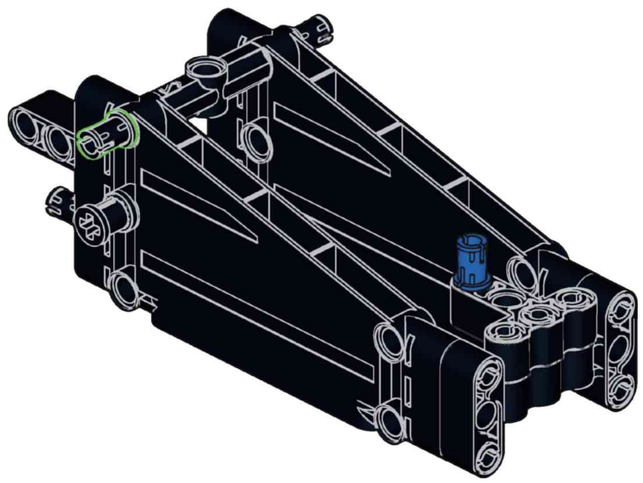

G72

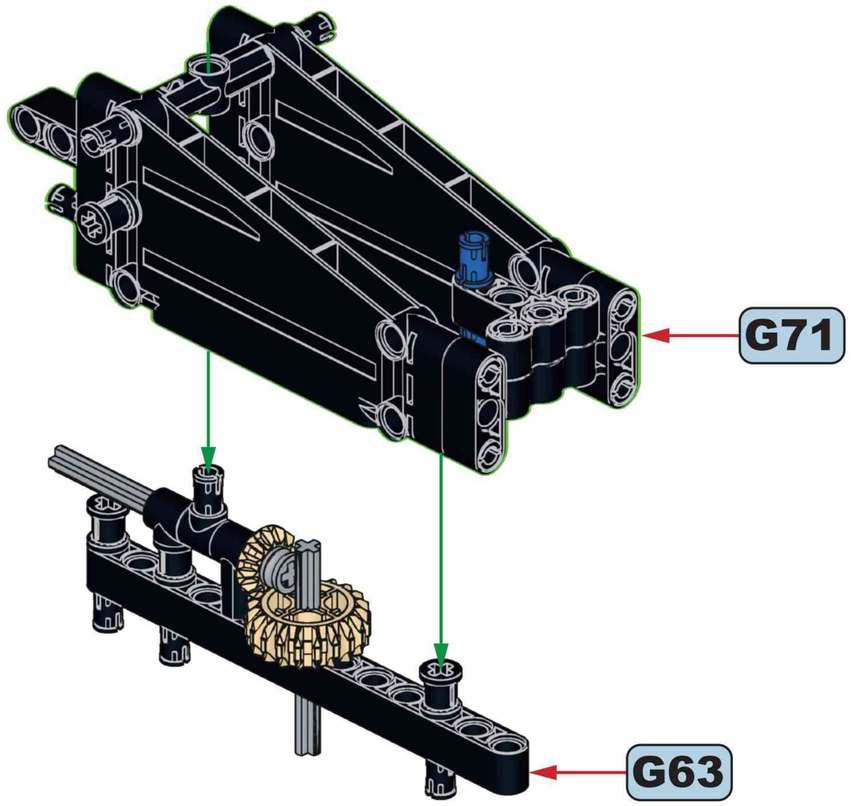

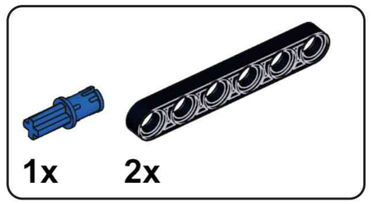

G73

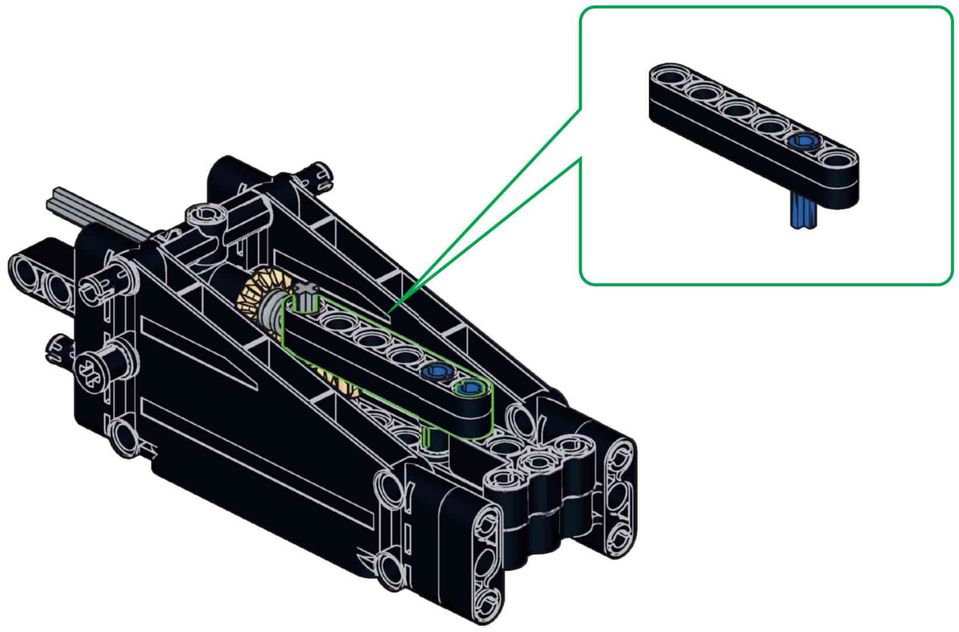

G74

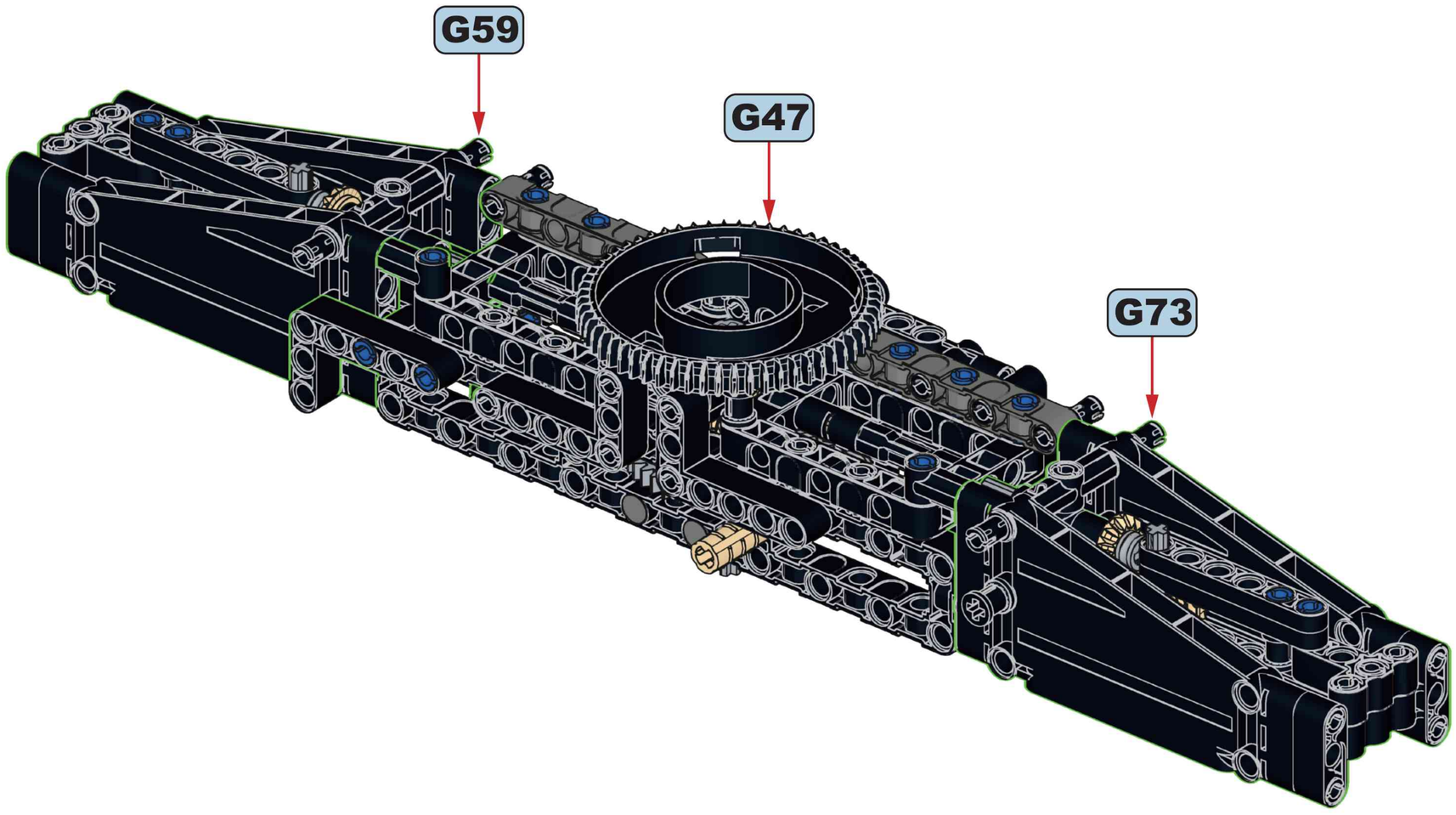

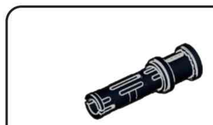

G75

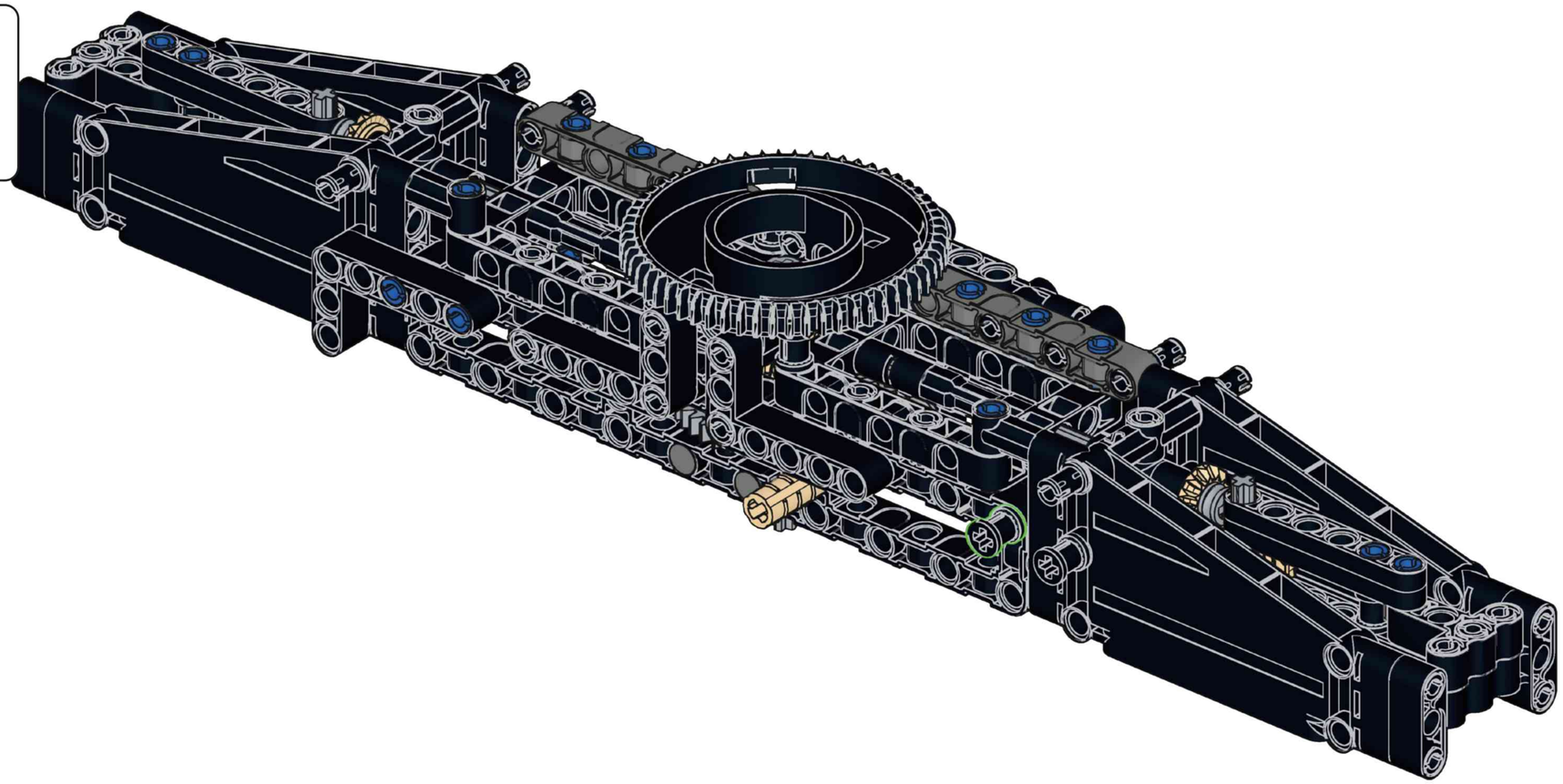

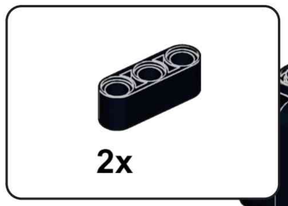

G76

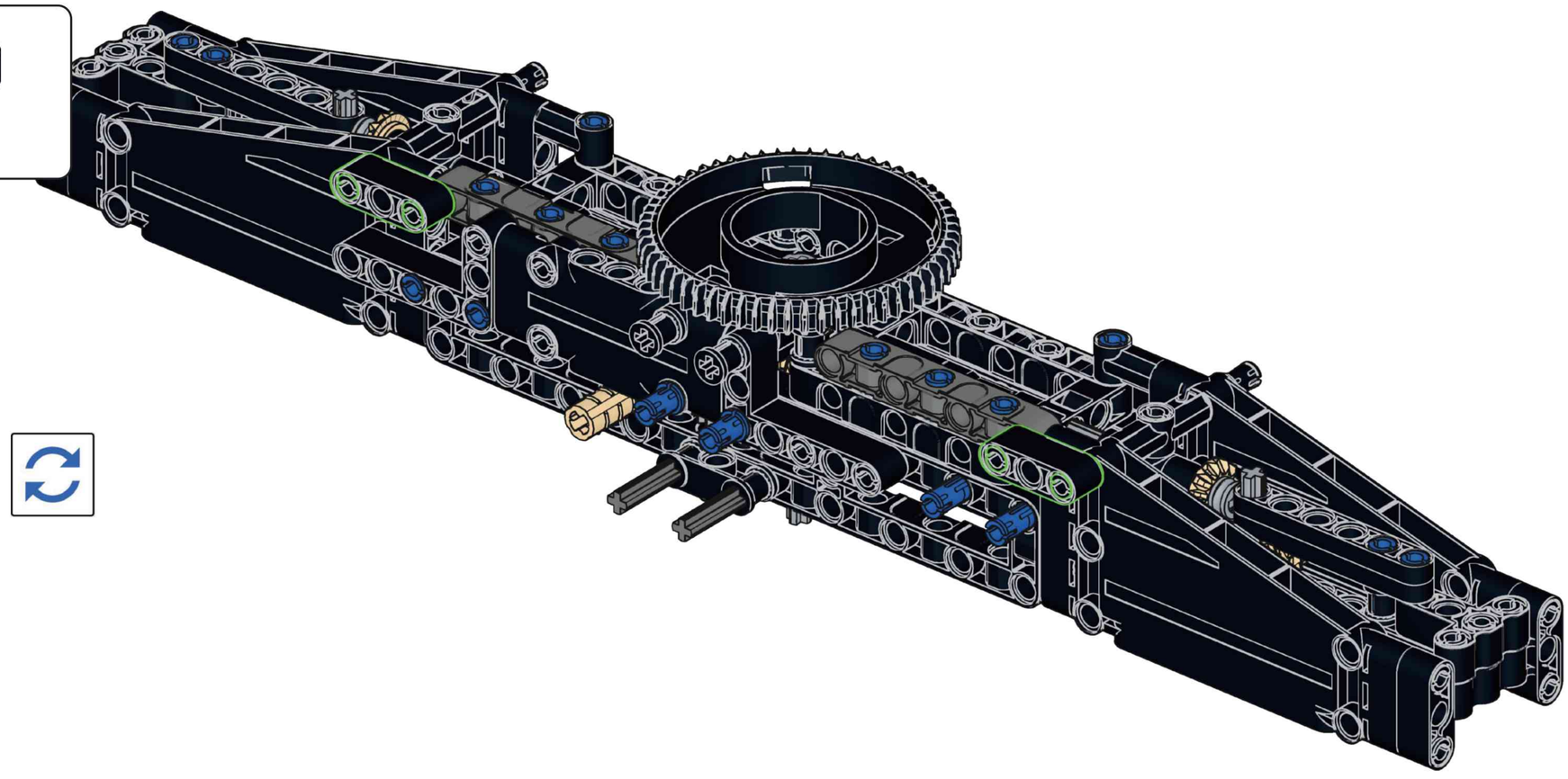

G77

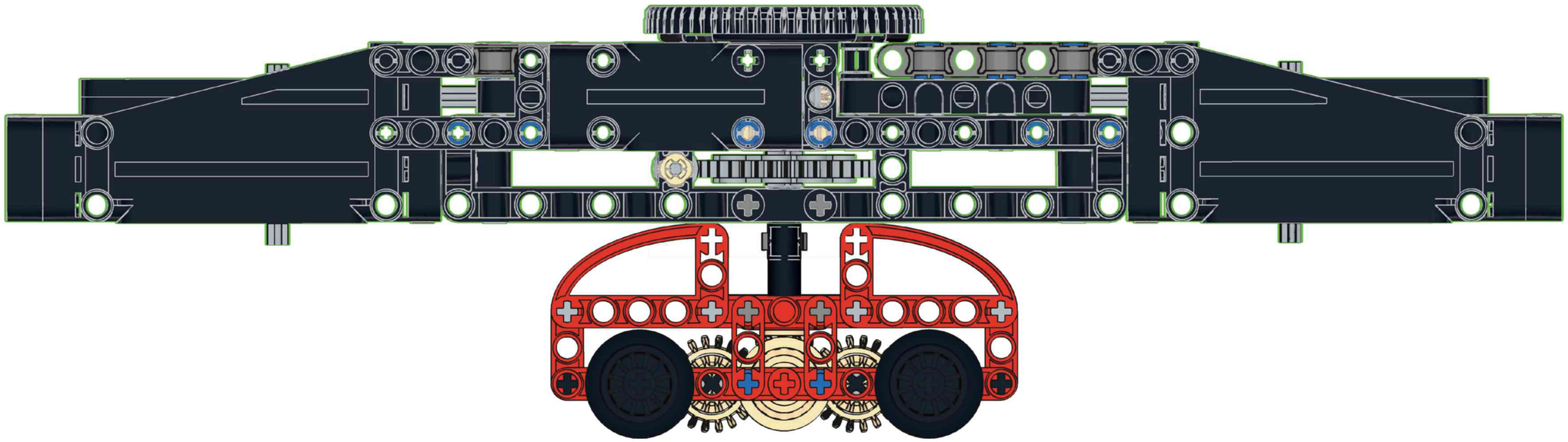

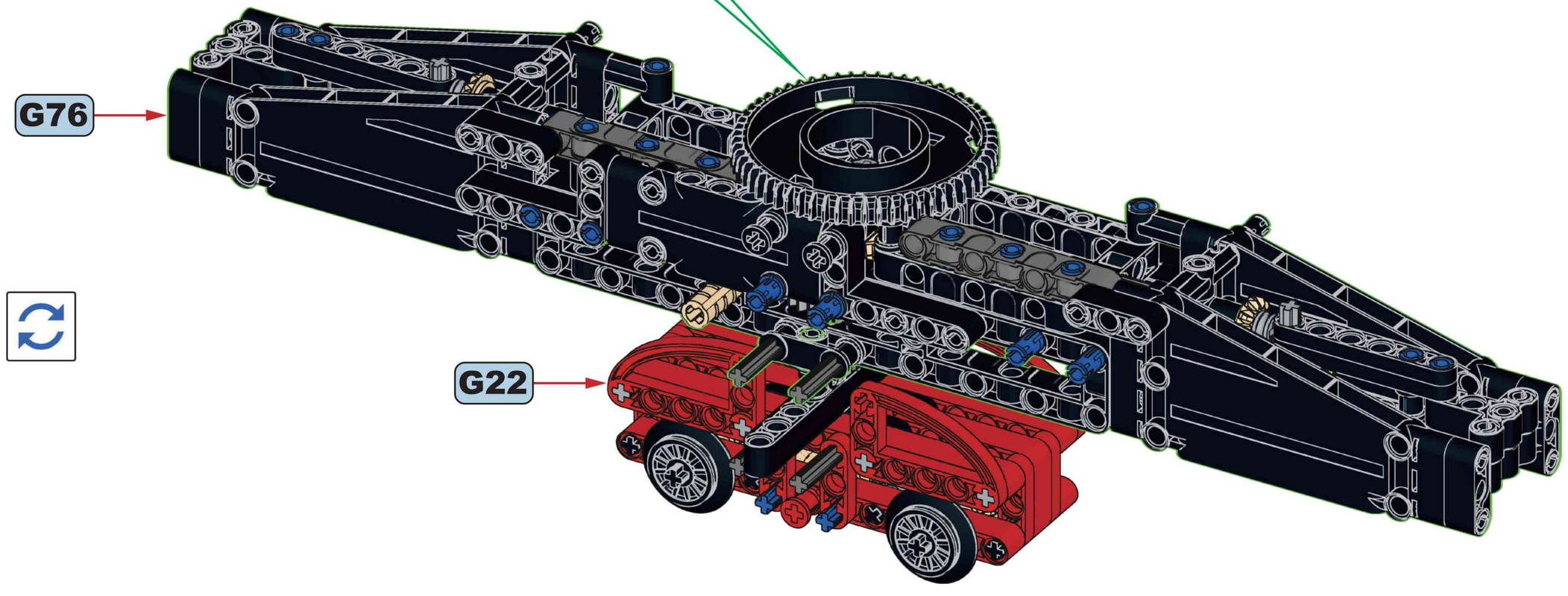

G78

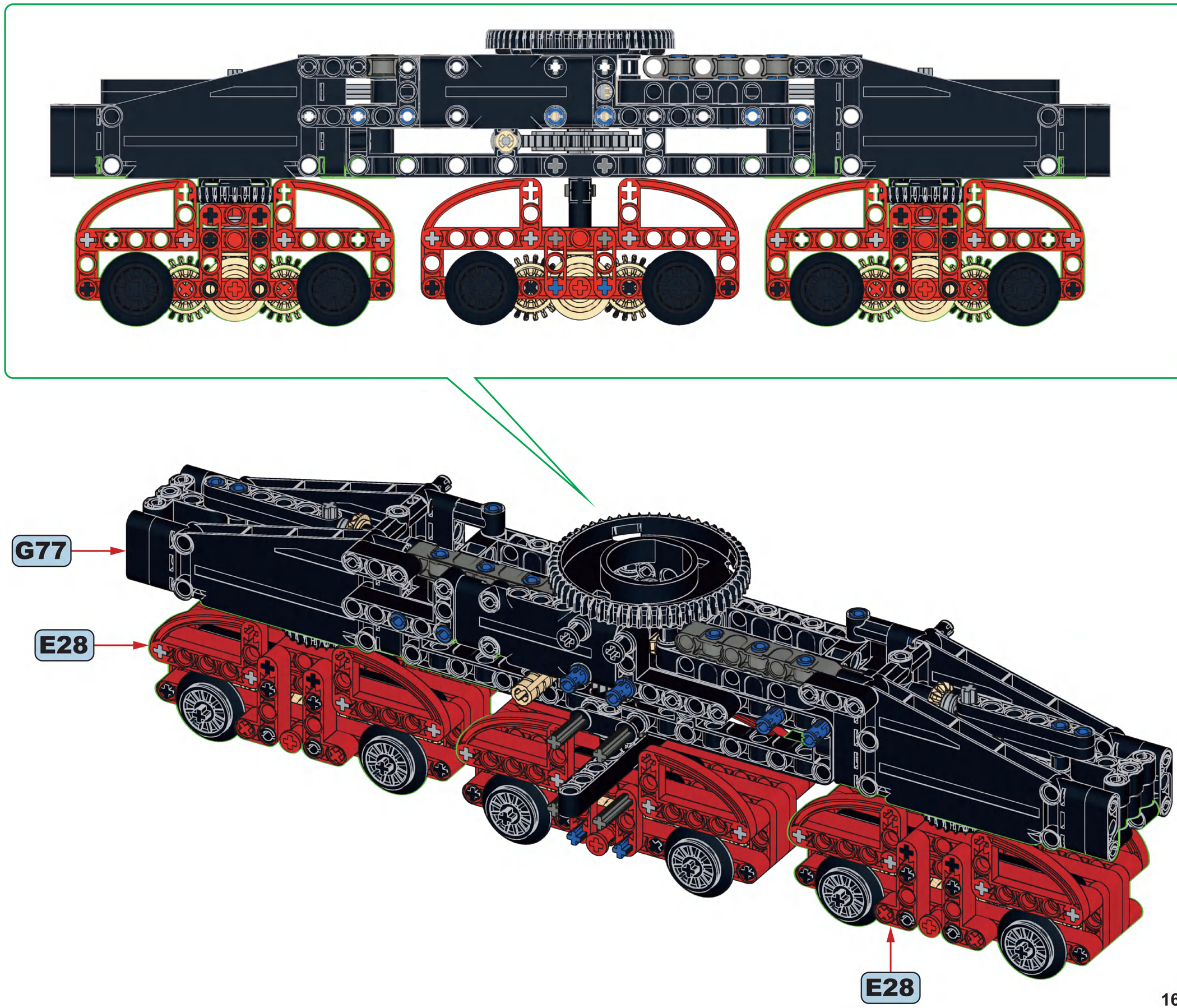



13x

G79

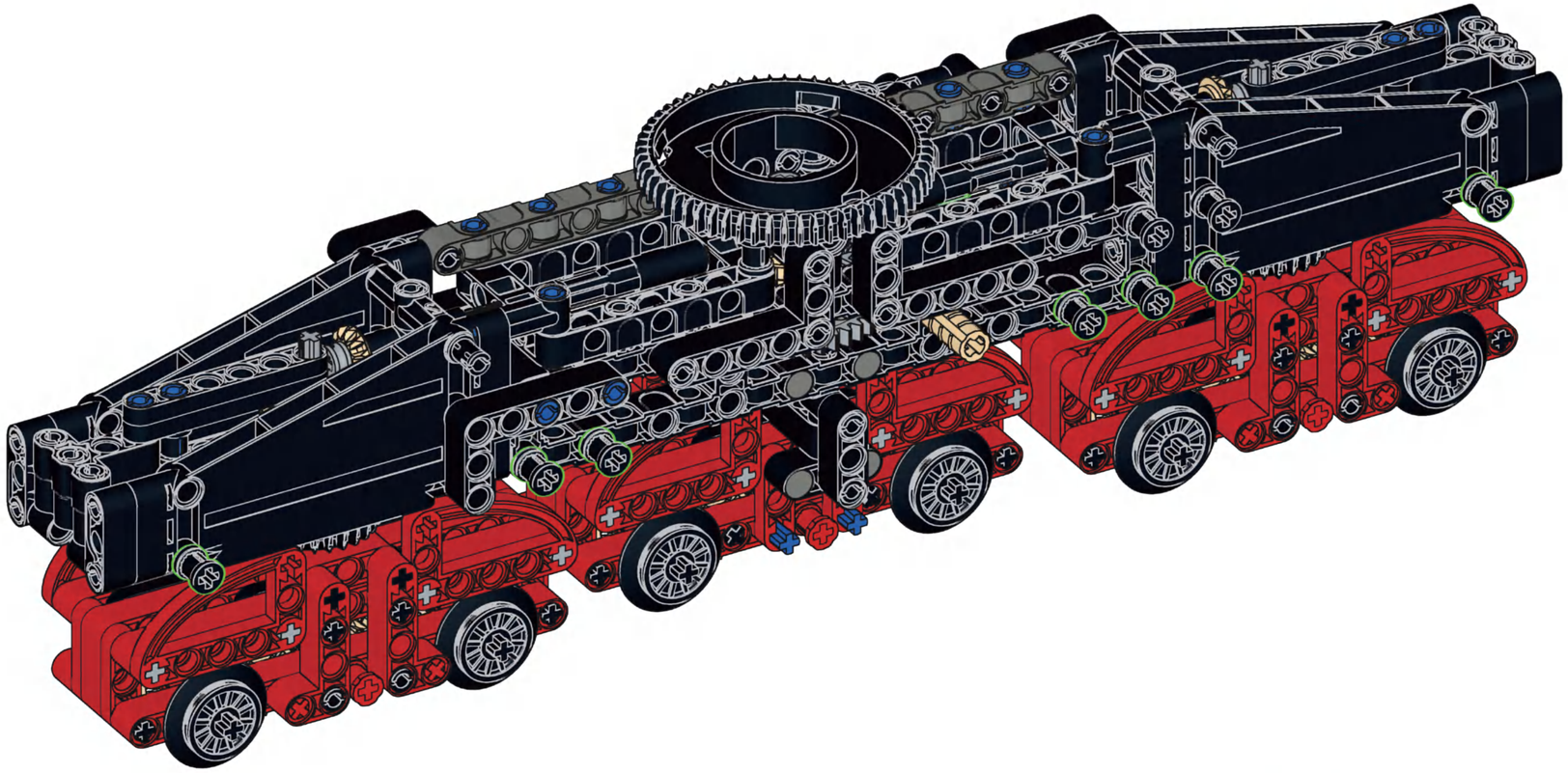

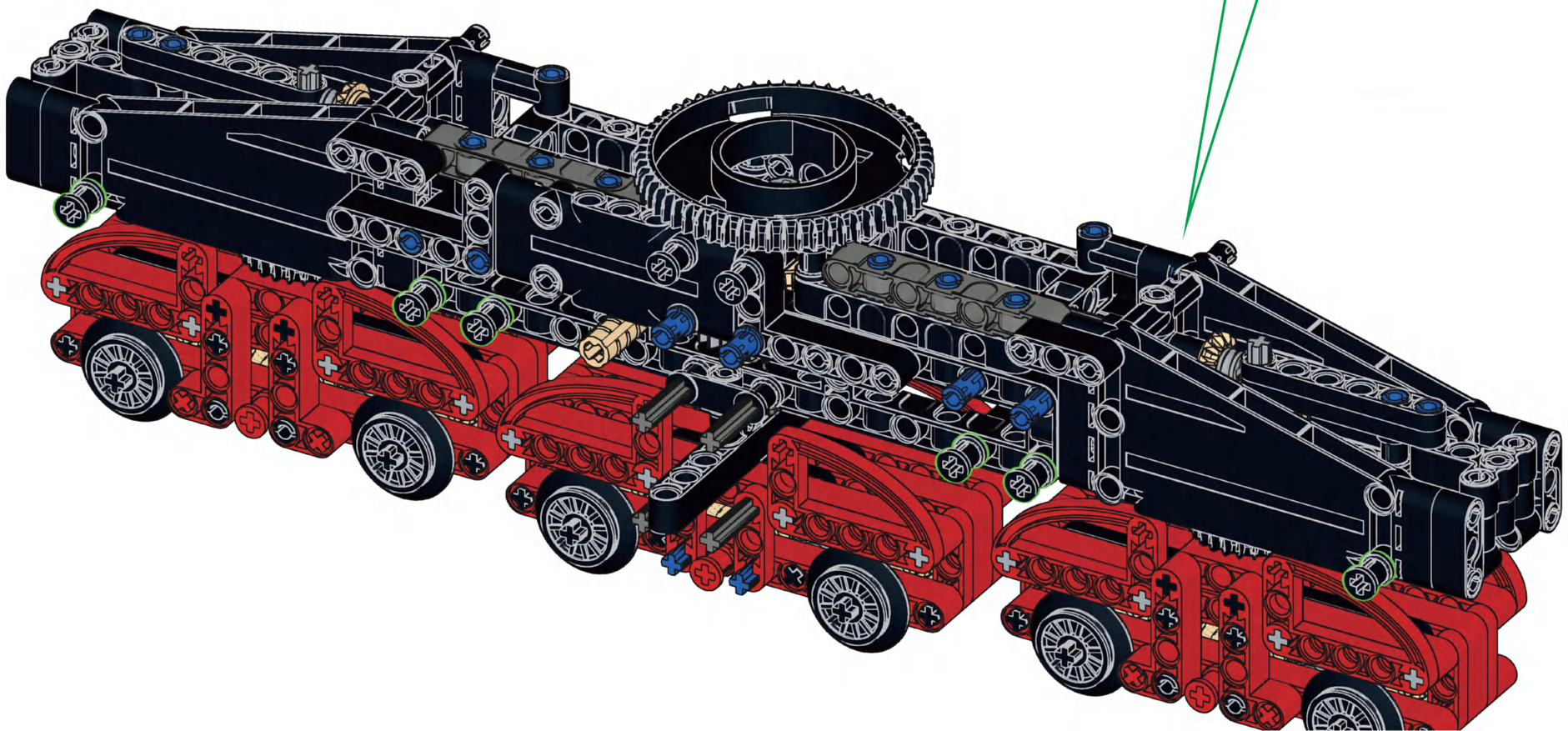

9

2x

G80

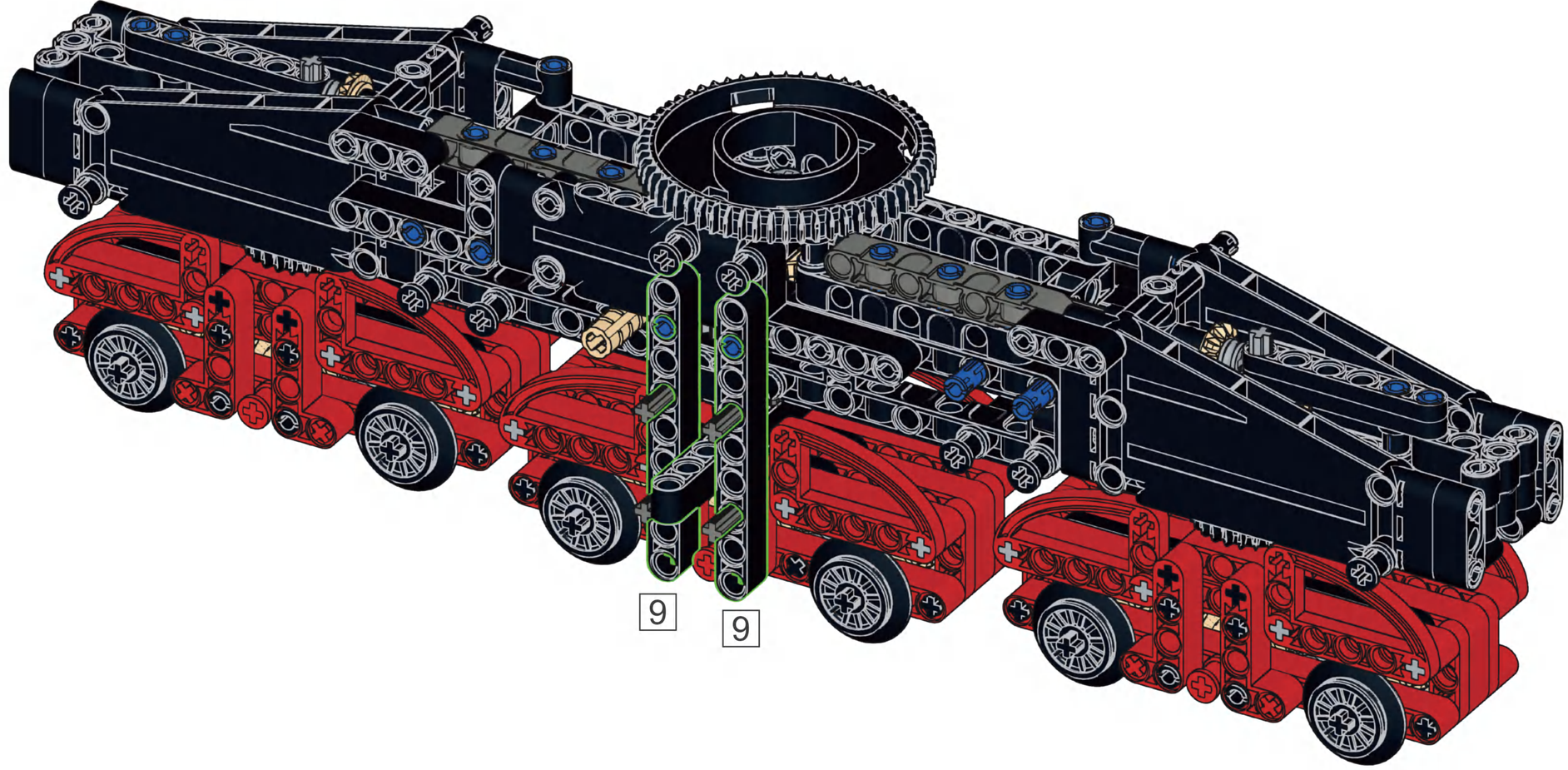

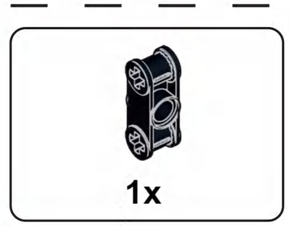

1x

G81

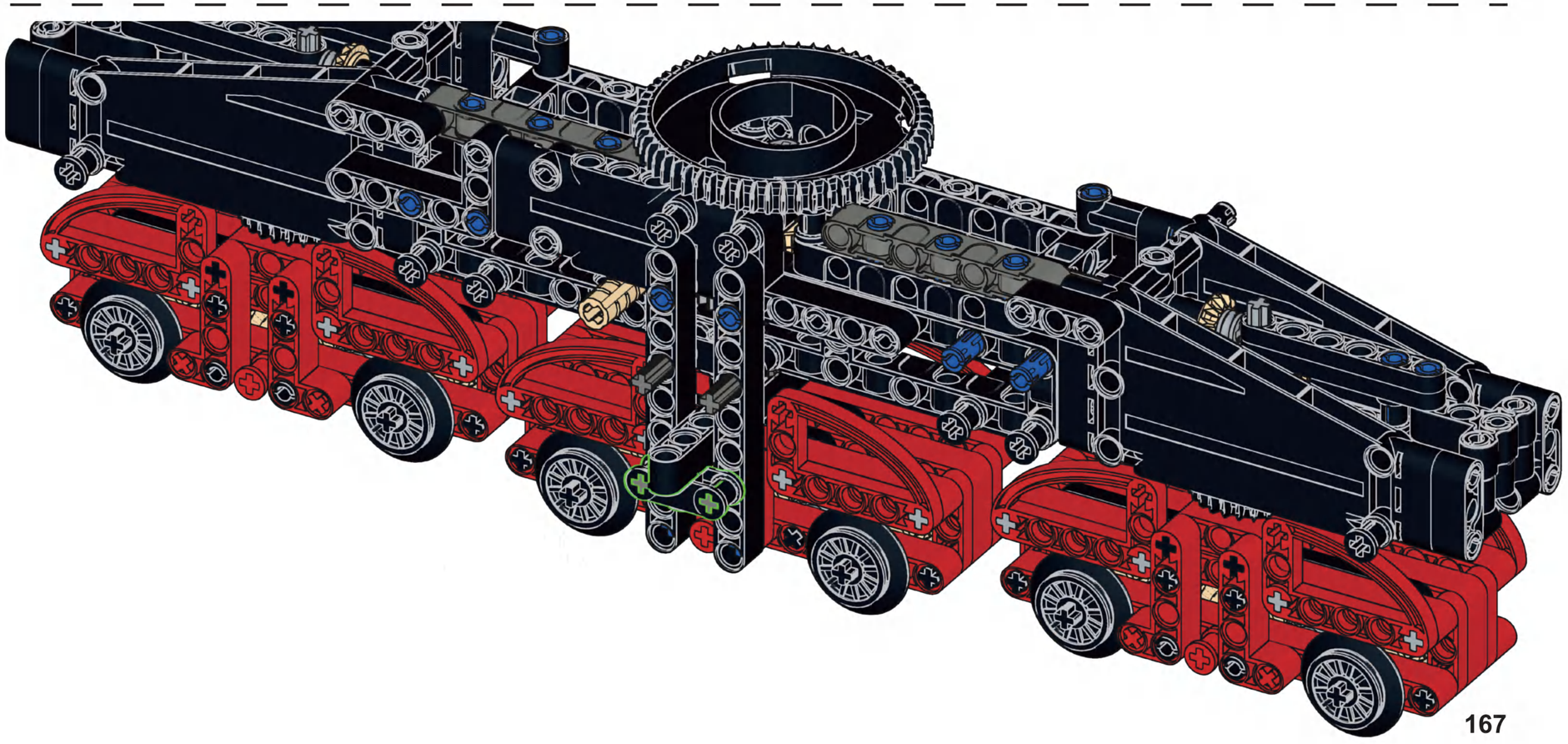



1x

G82

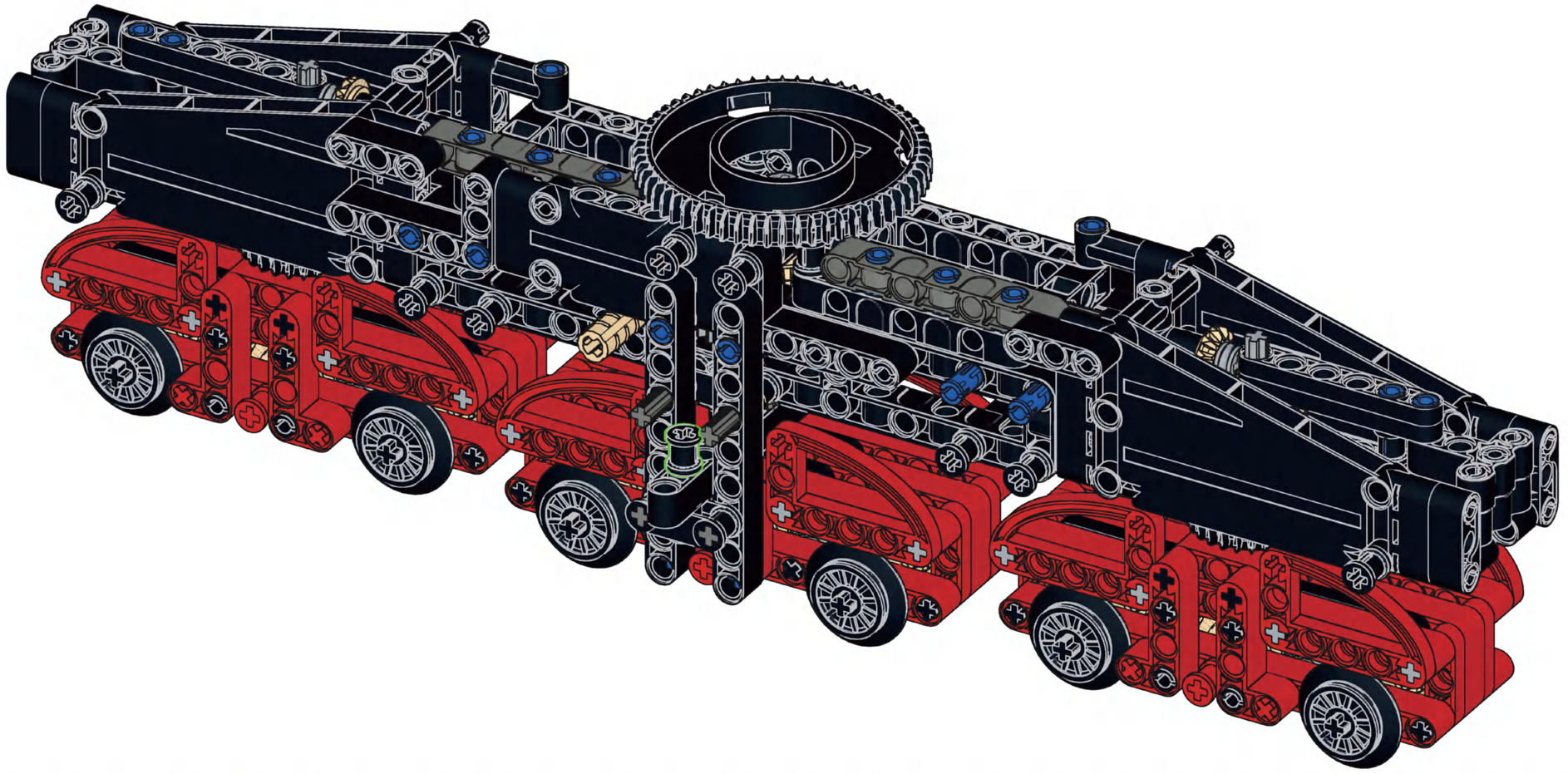



1x

G83

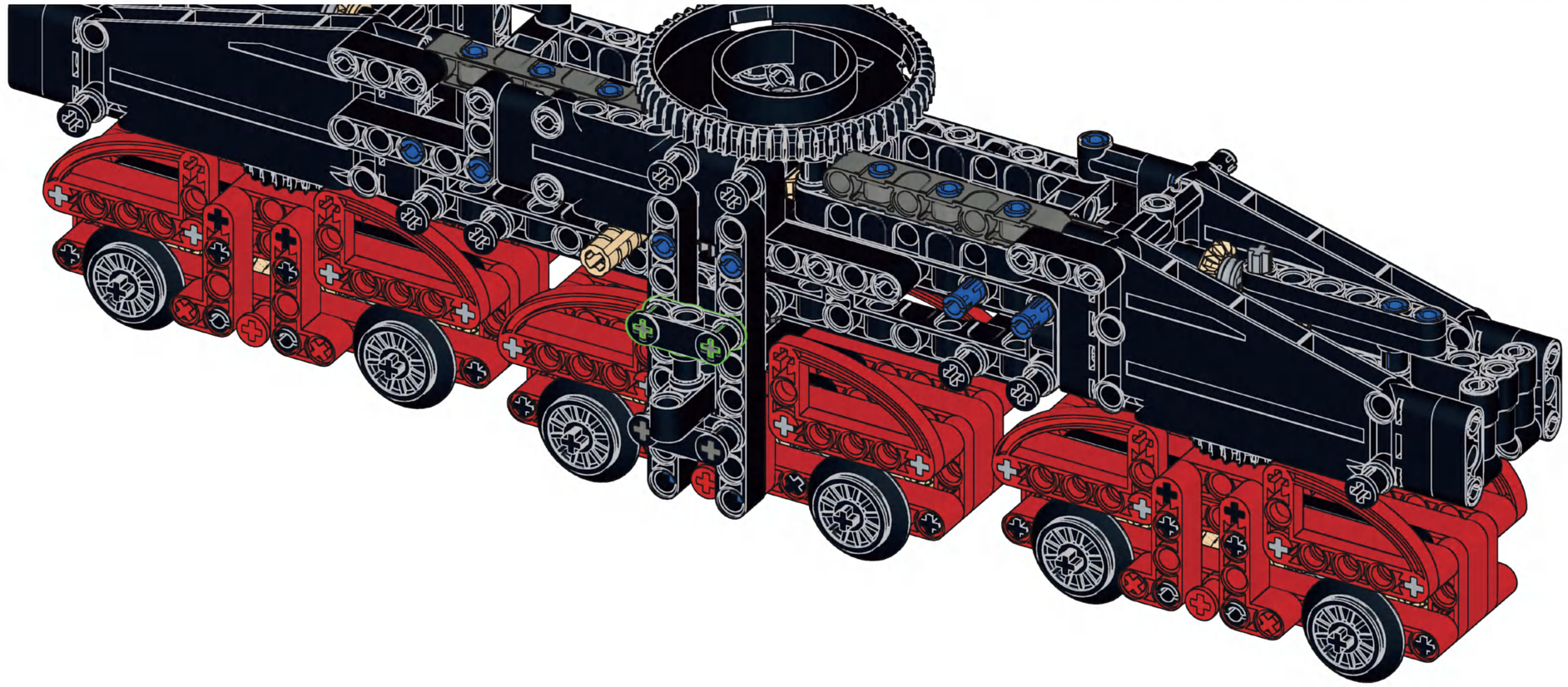

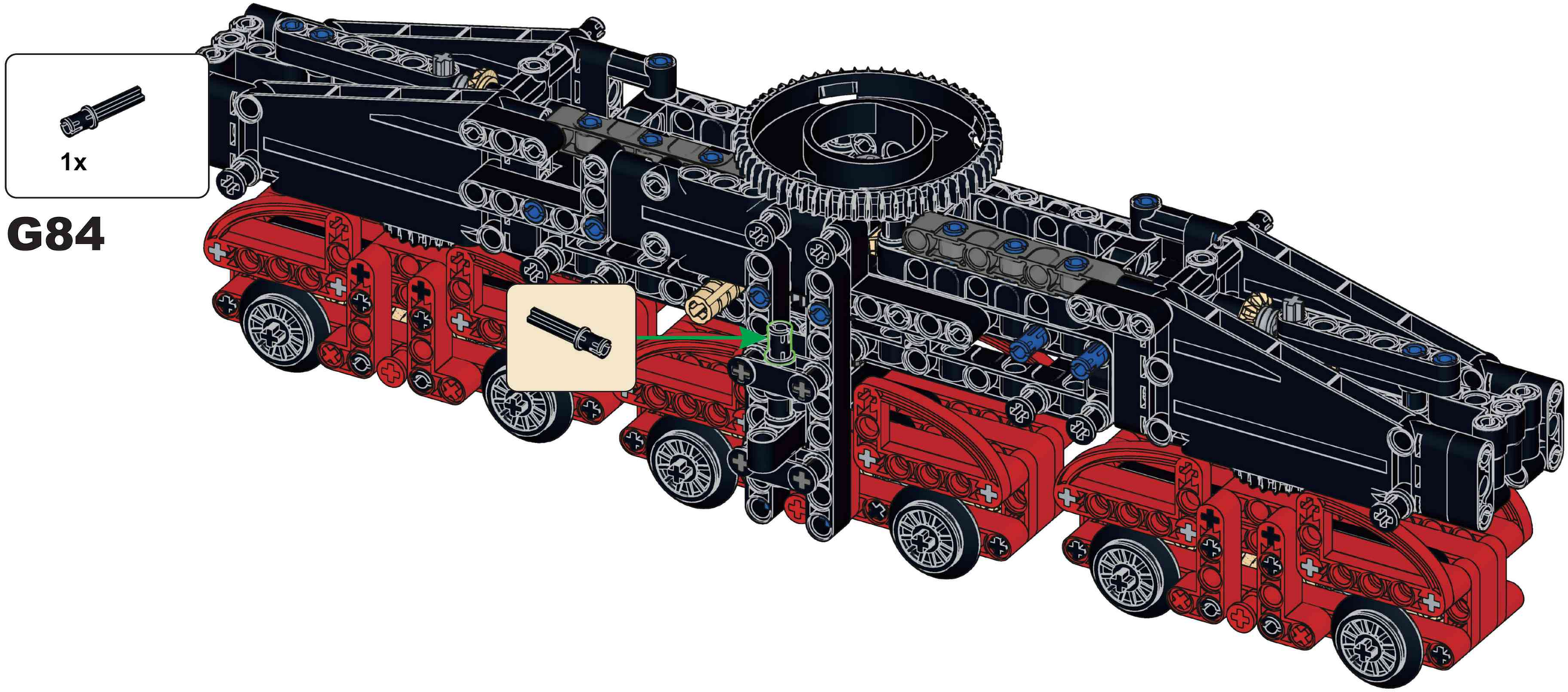

G84

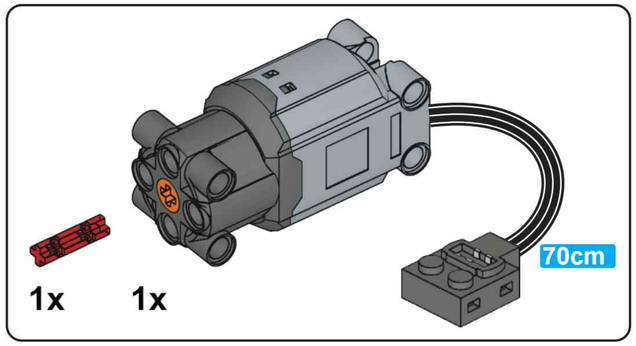

G85

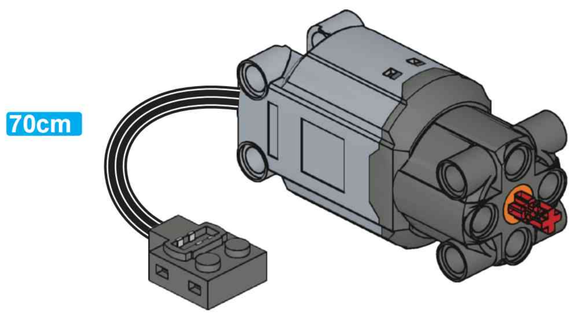

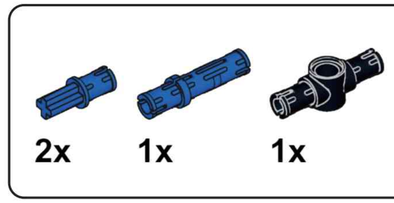

G86

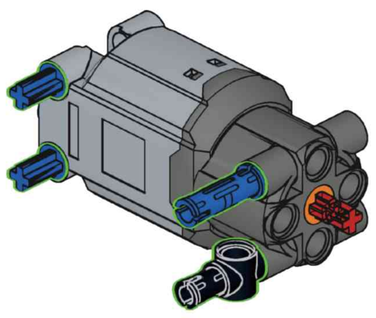

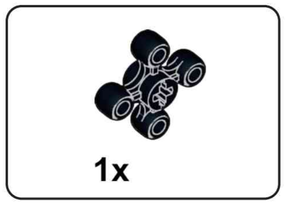

G87

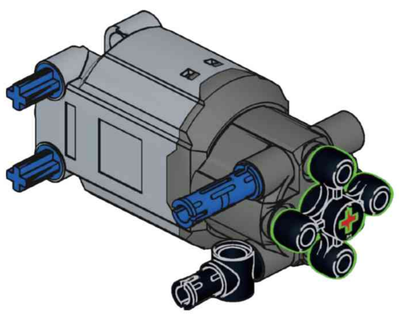

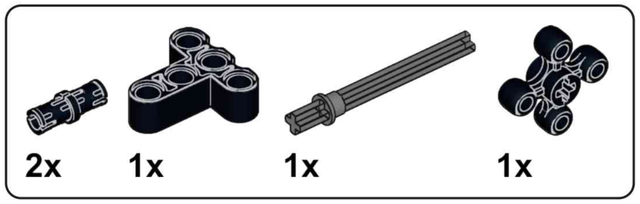

G88

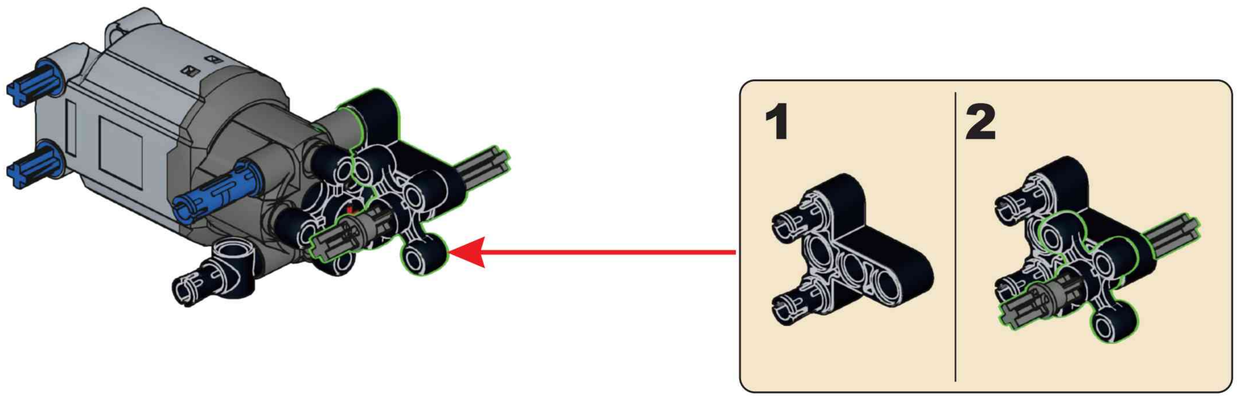

G89

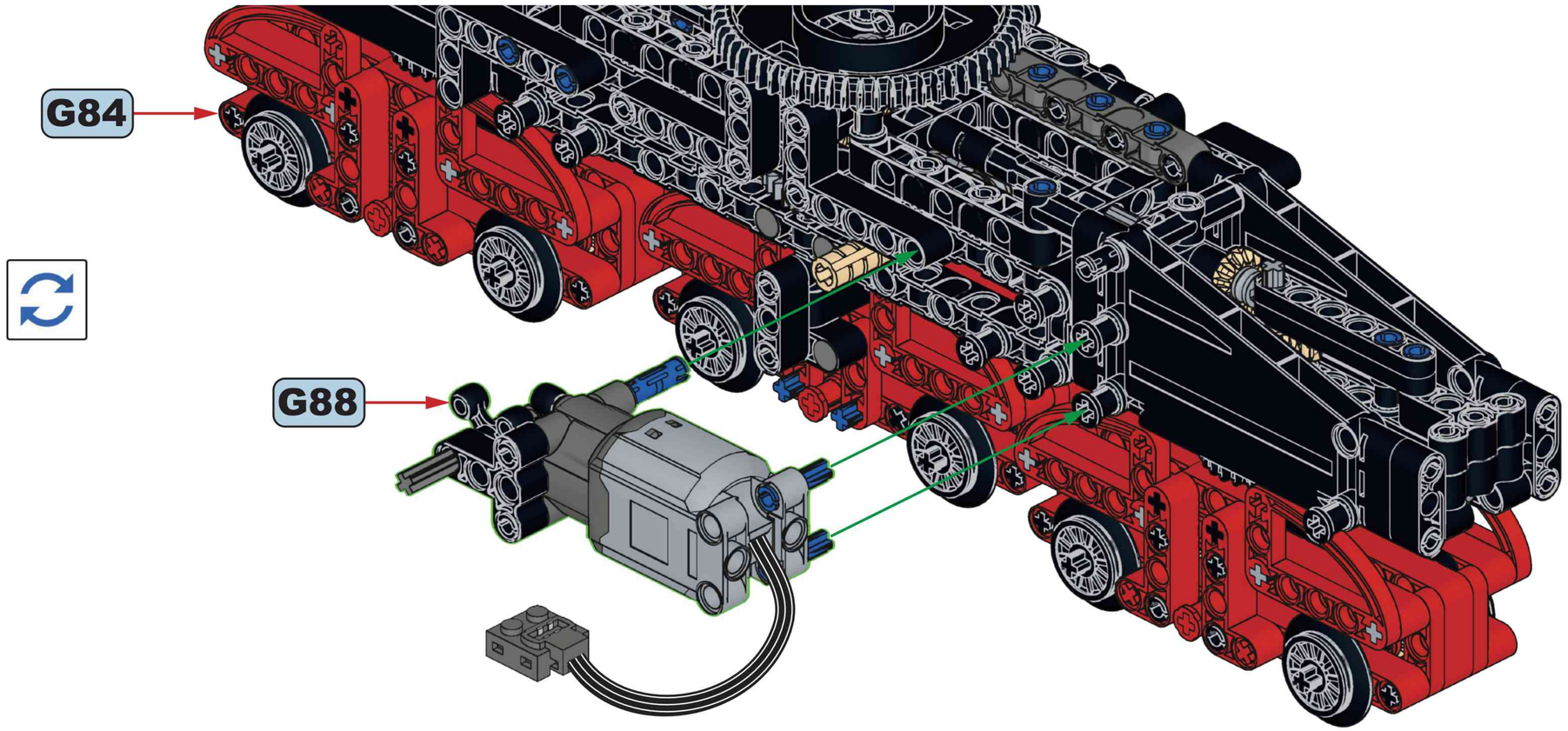

G90

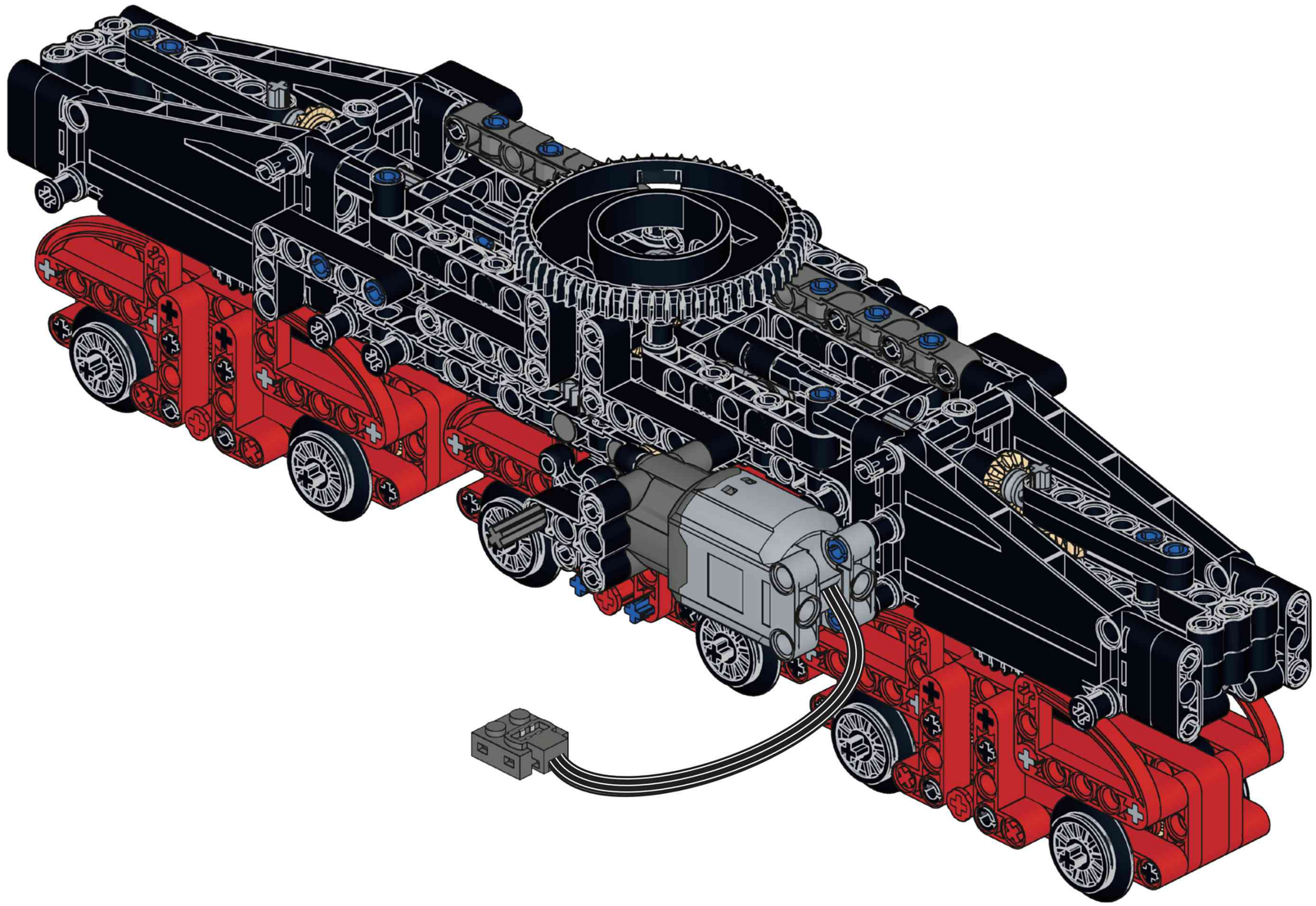

x2

G91

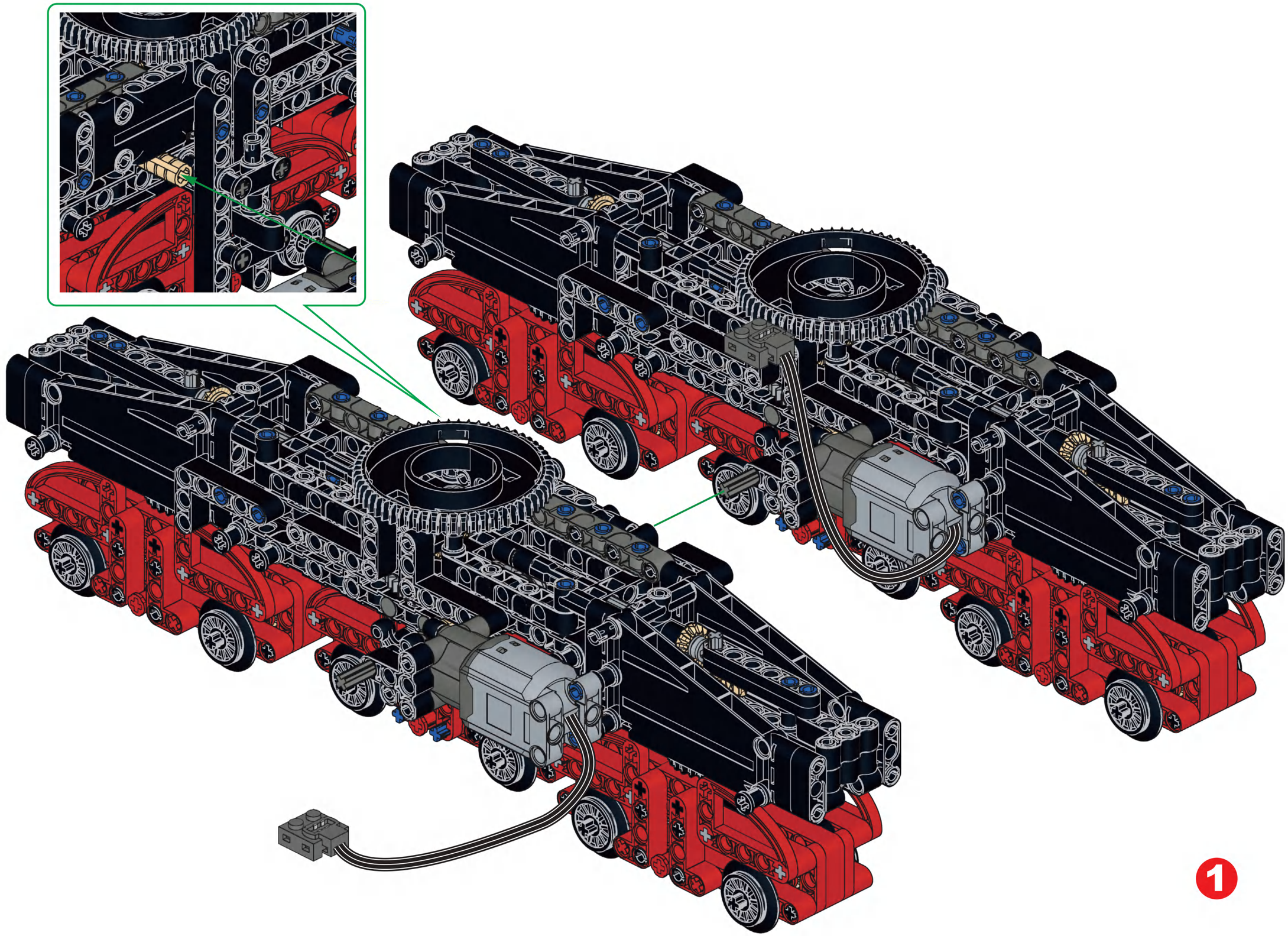

1

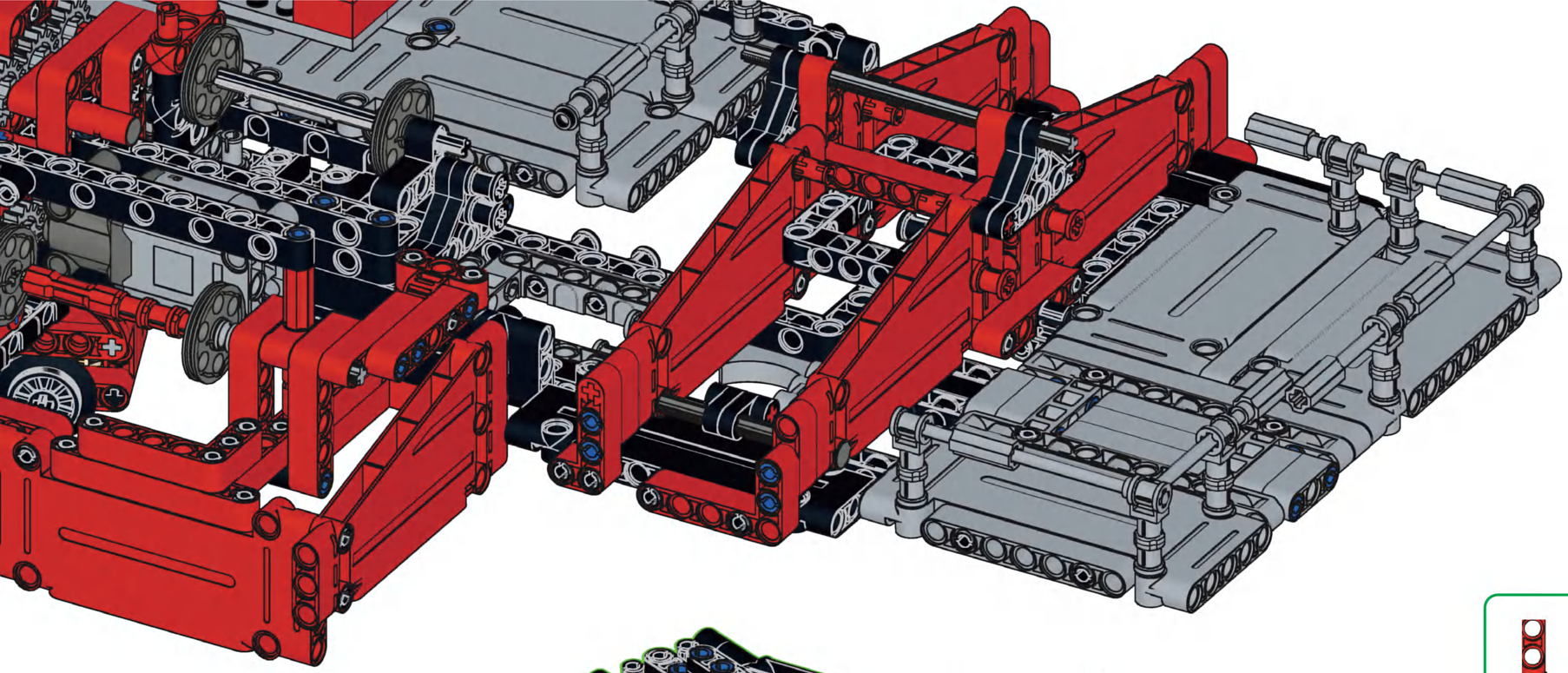

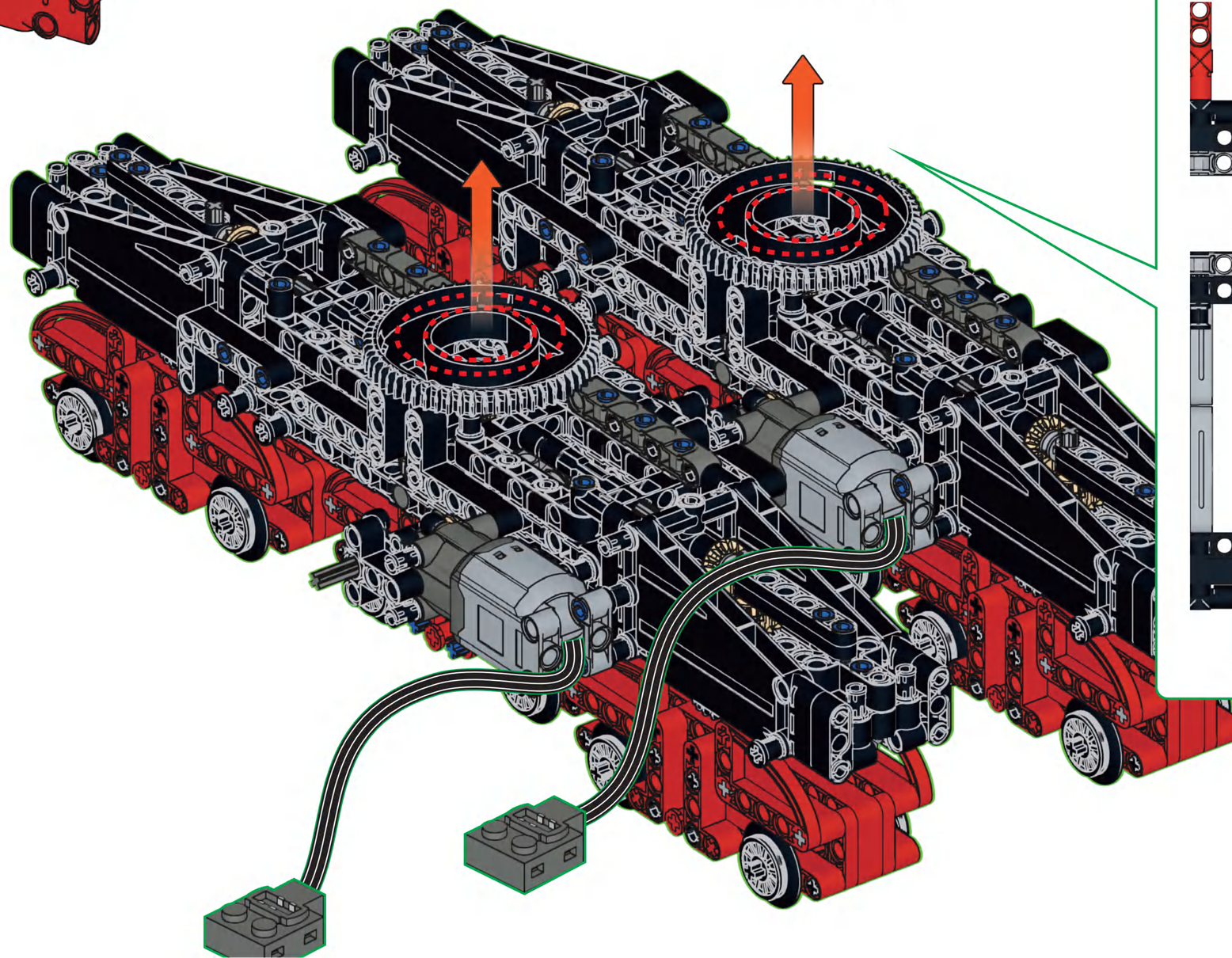

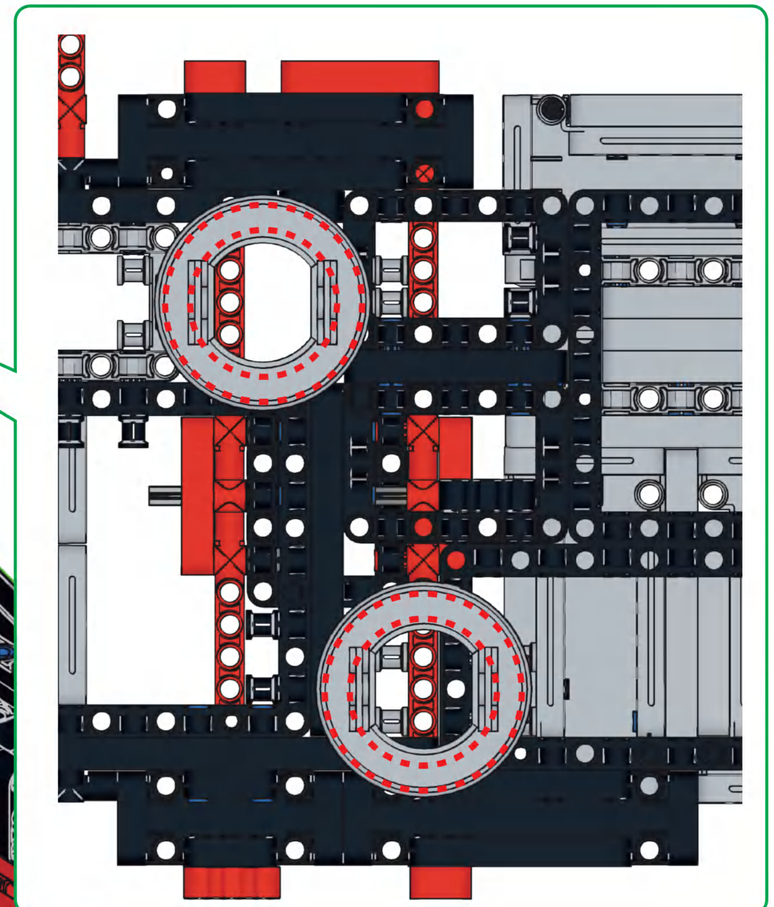

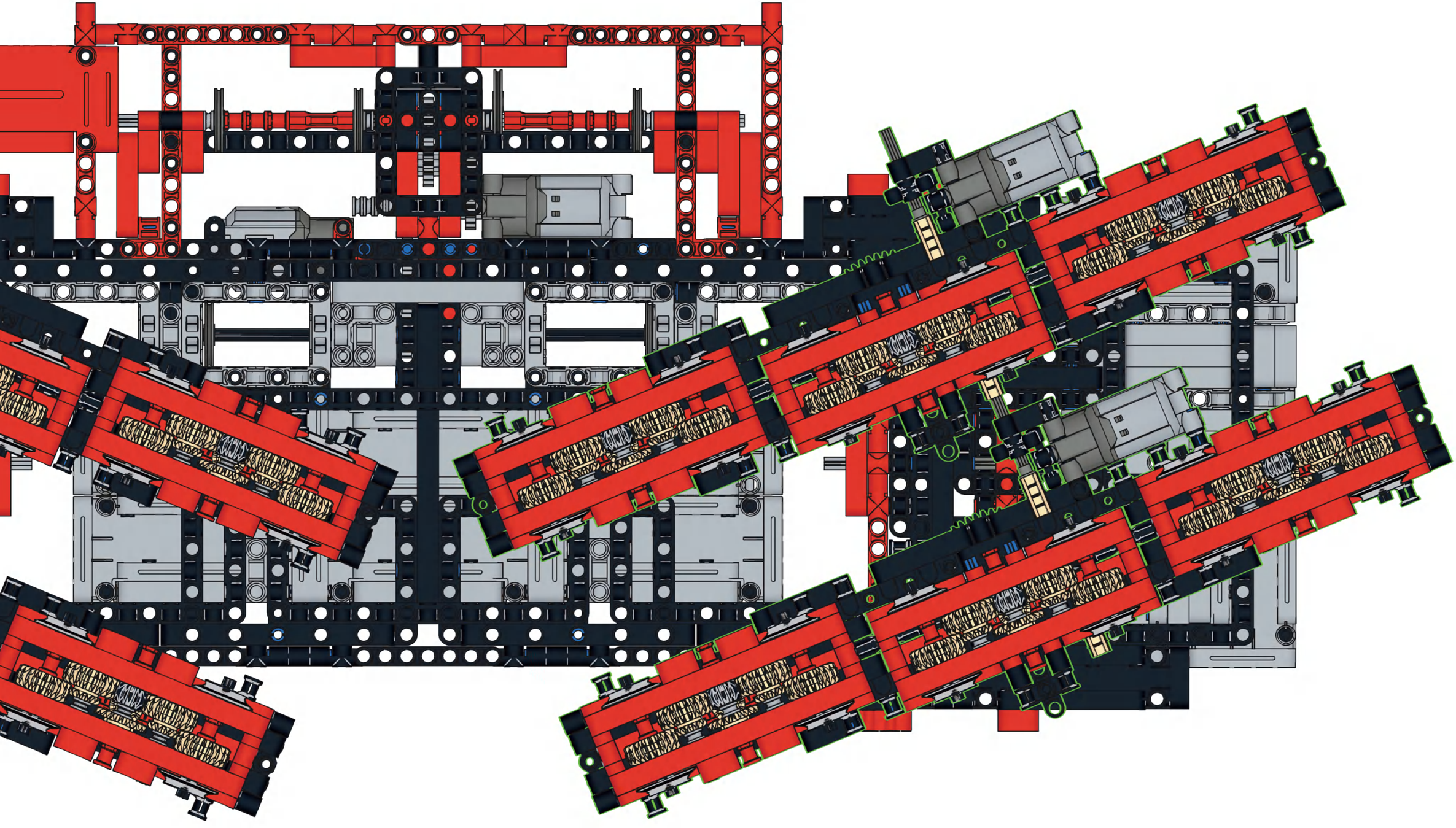

3

8

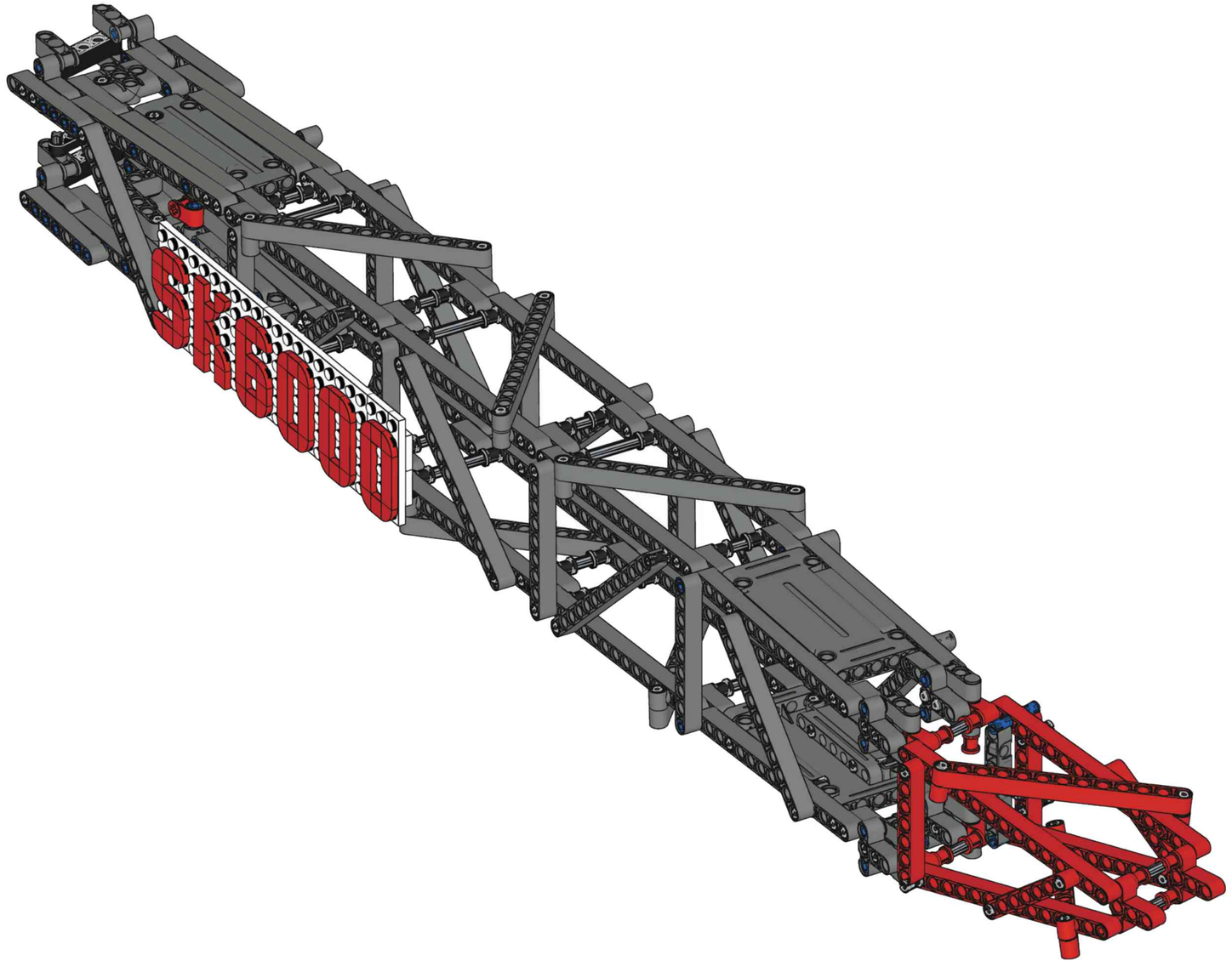

H

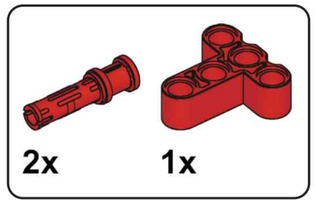

H1

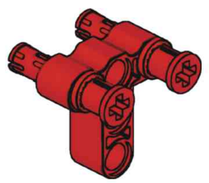

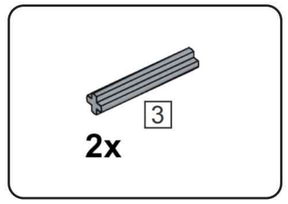

H2

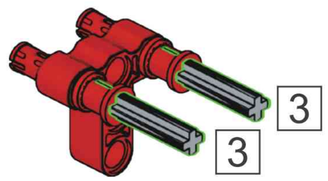

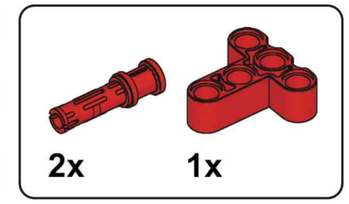

H3

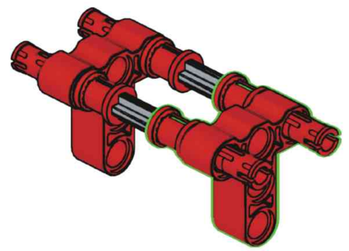

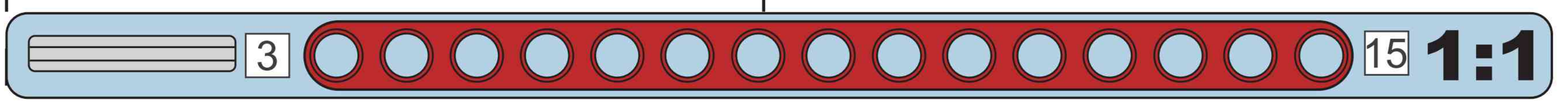

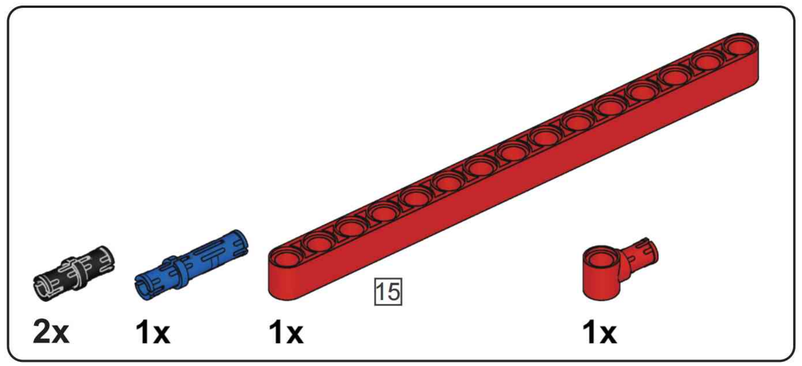

H4

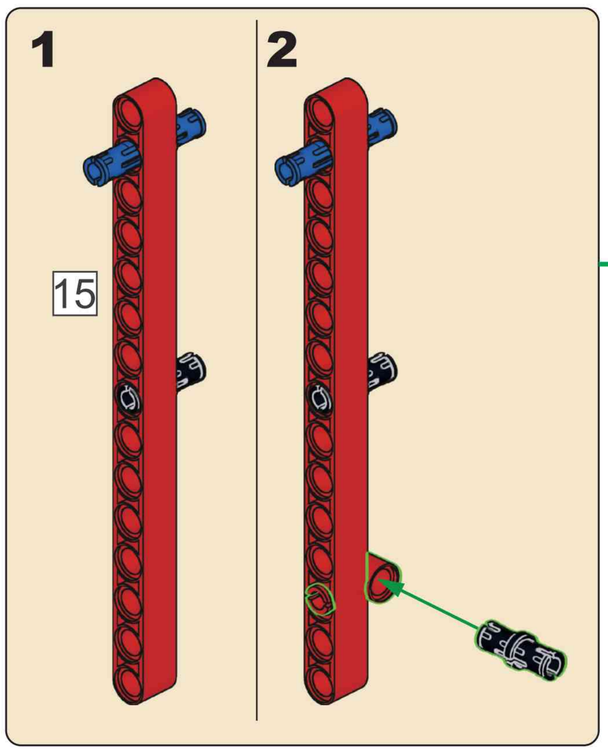

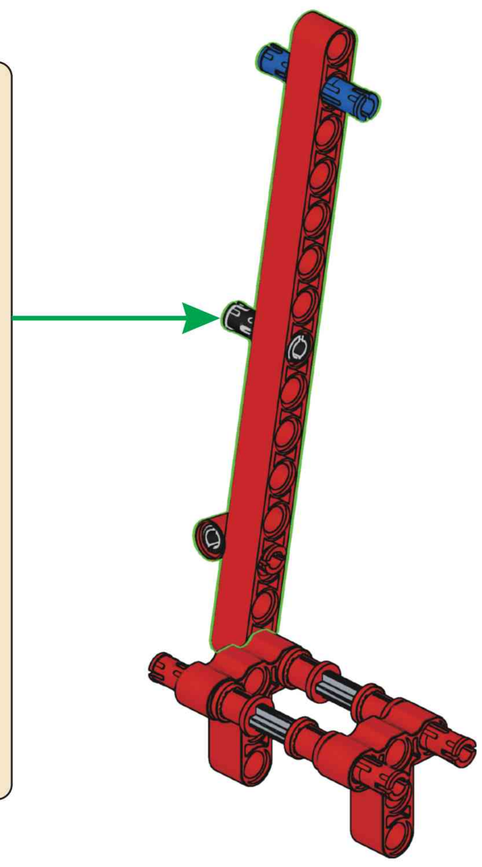

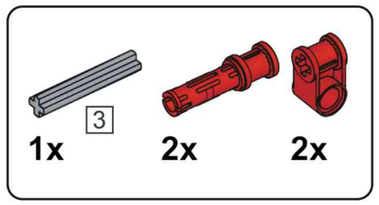

H5

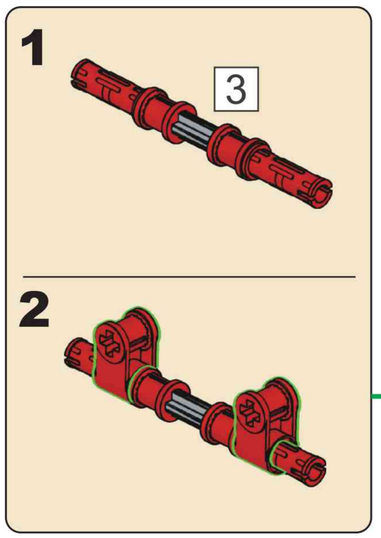

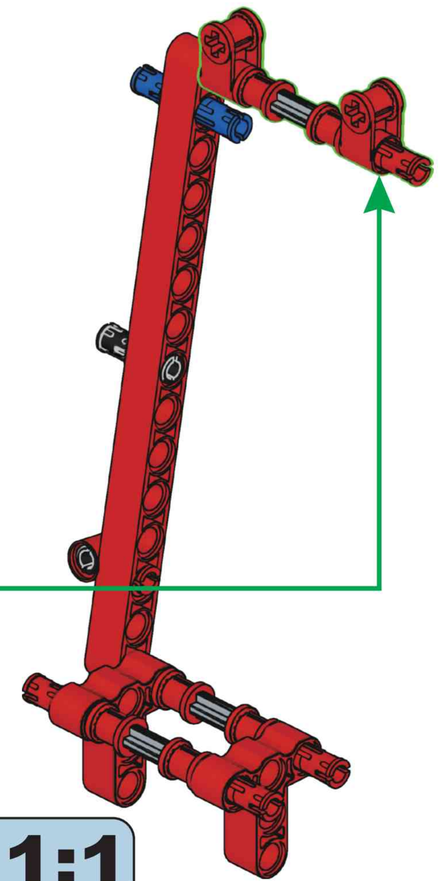

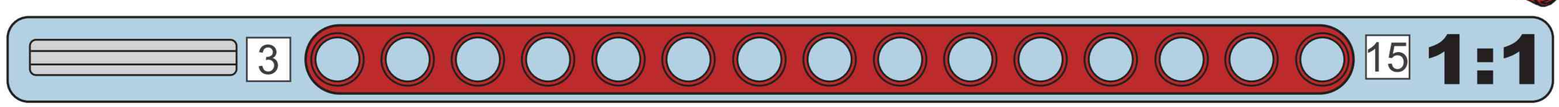

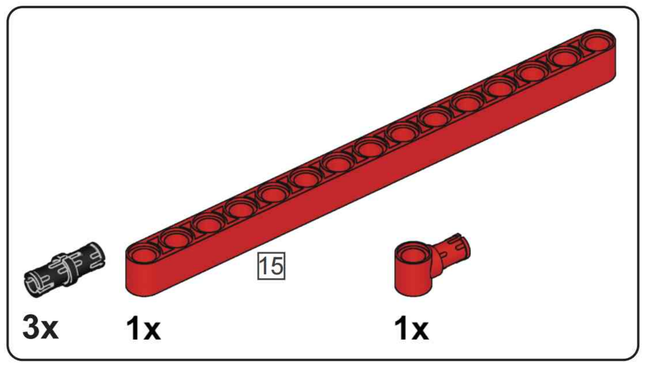

H6

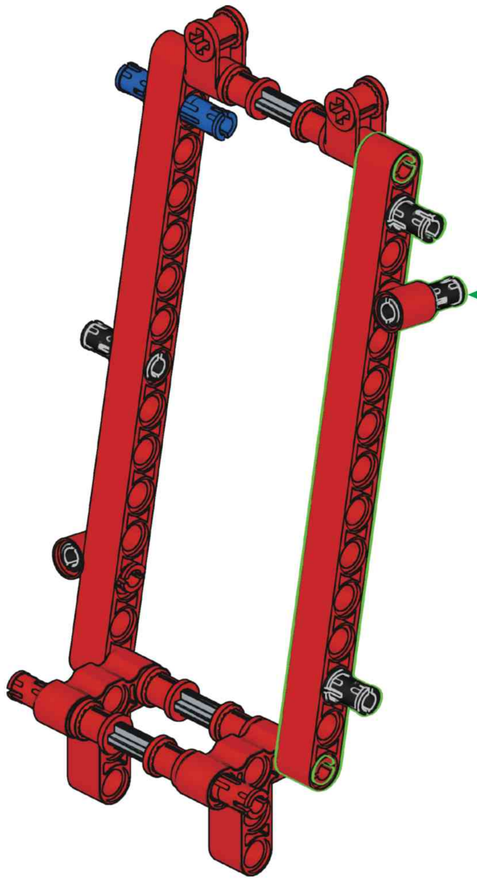

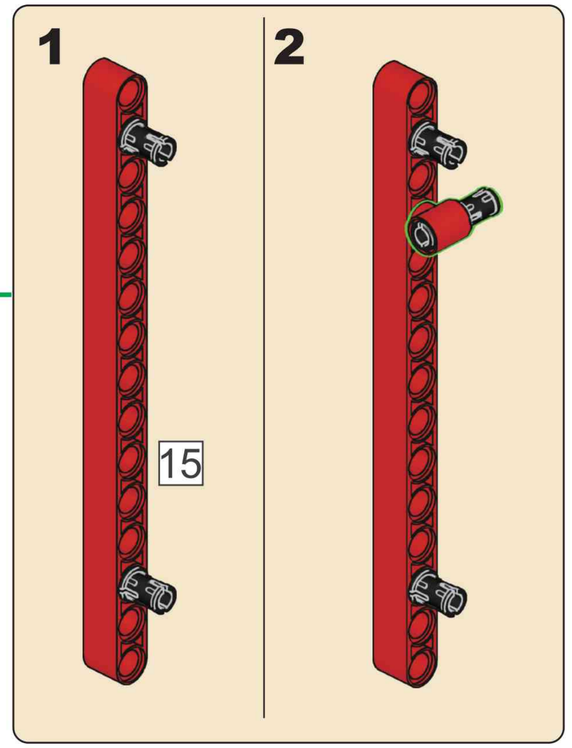

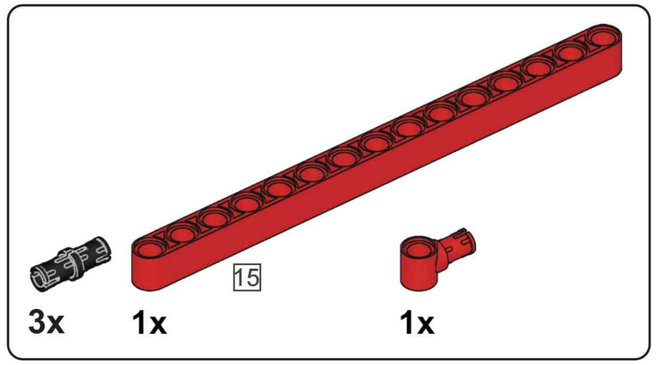

H7

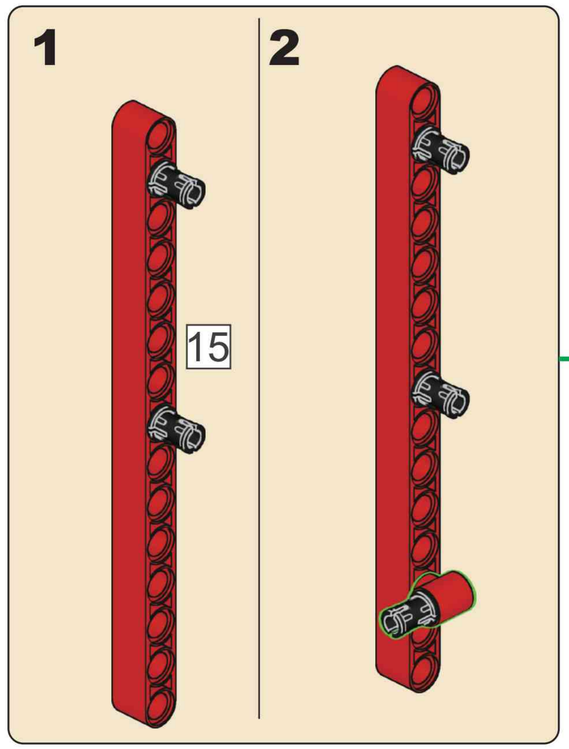

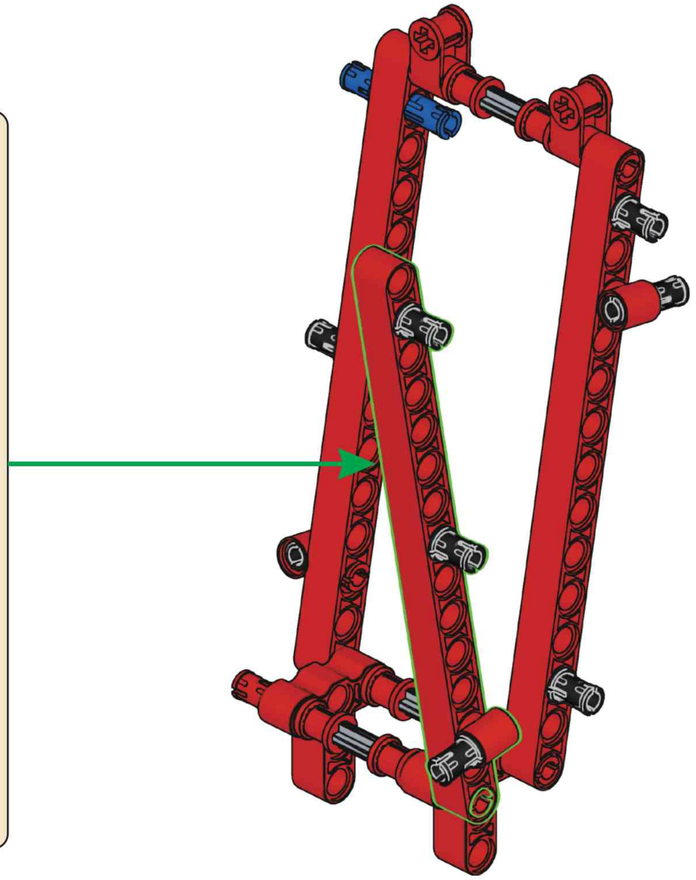

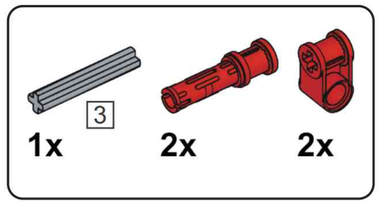

H8

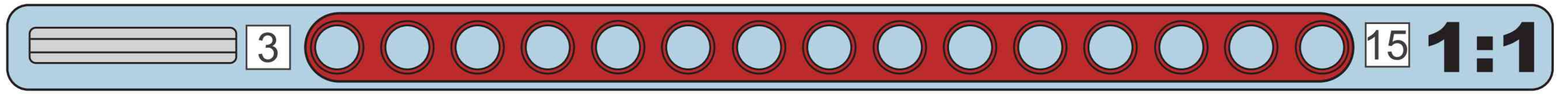

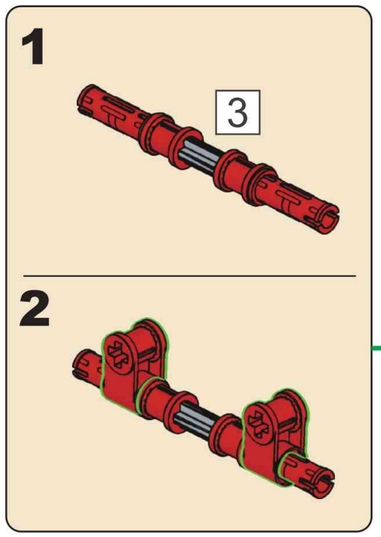



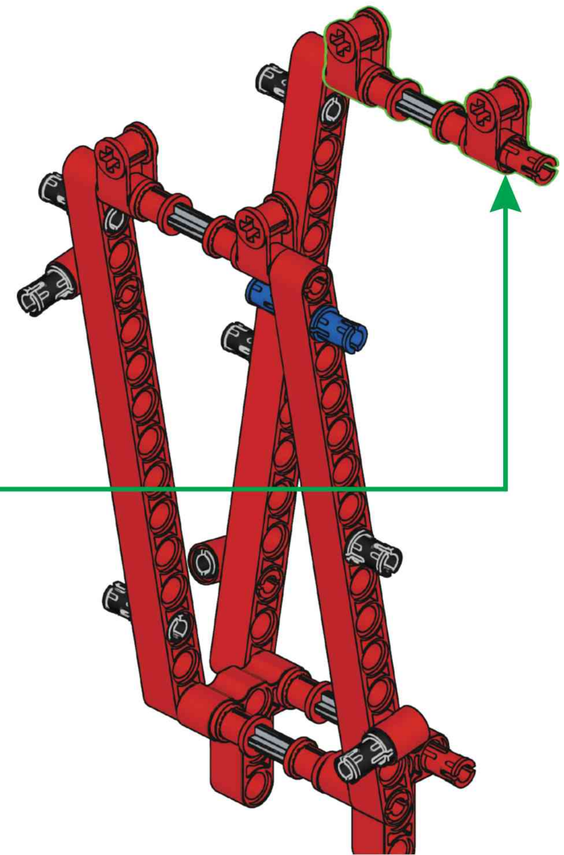

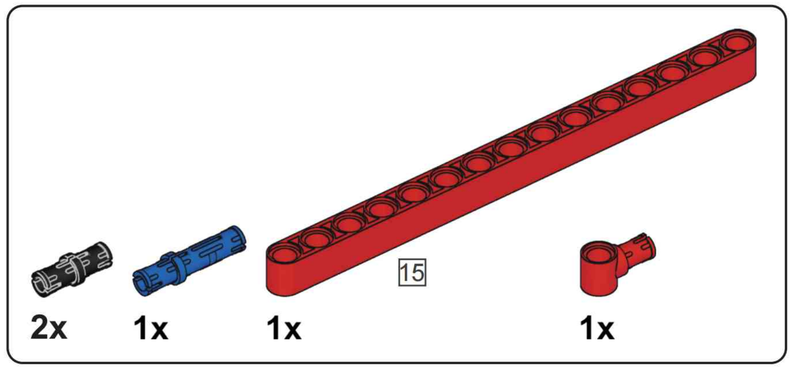

H9

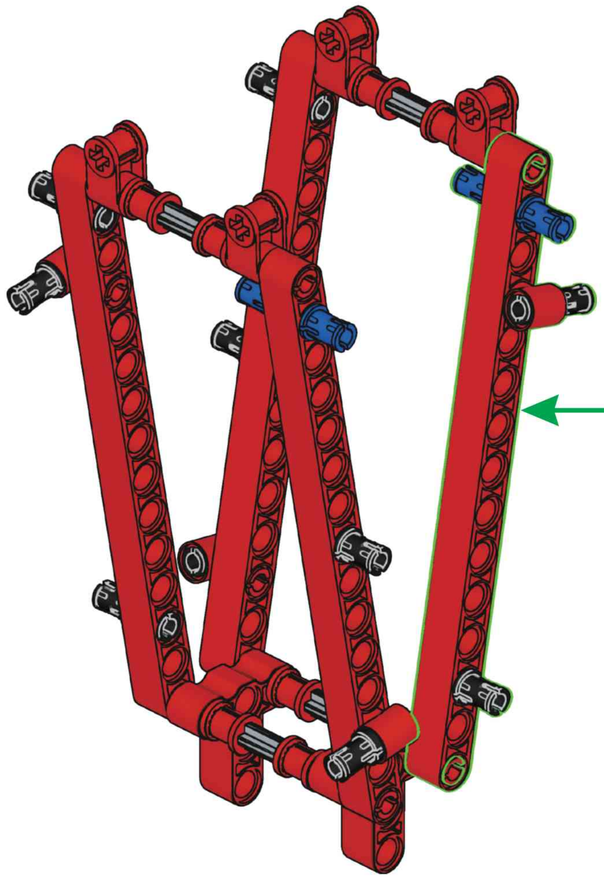

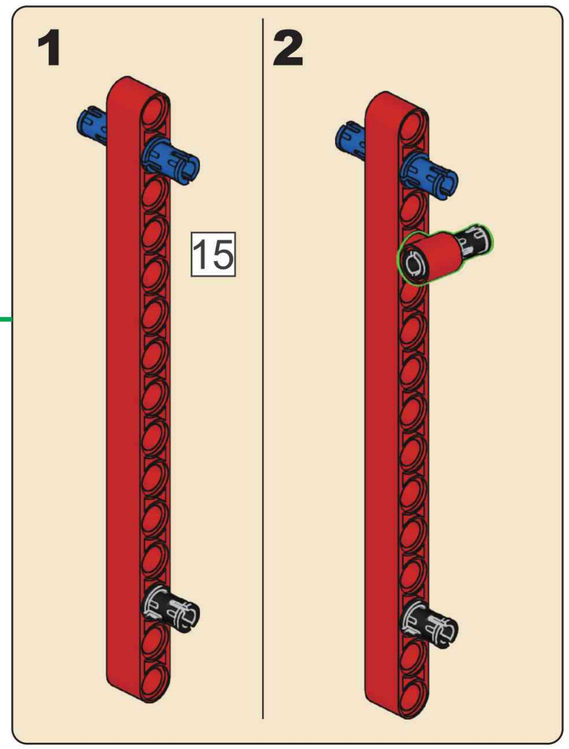

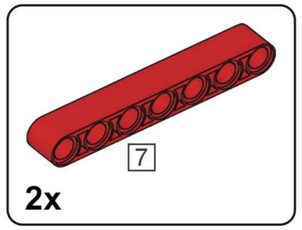

H10

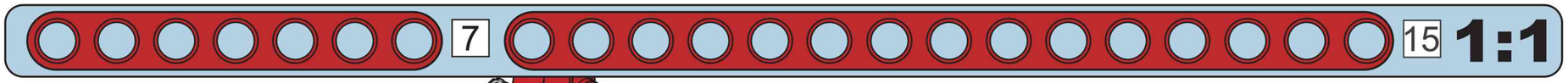

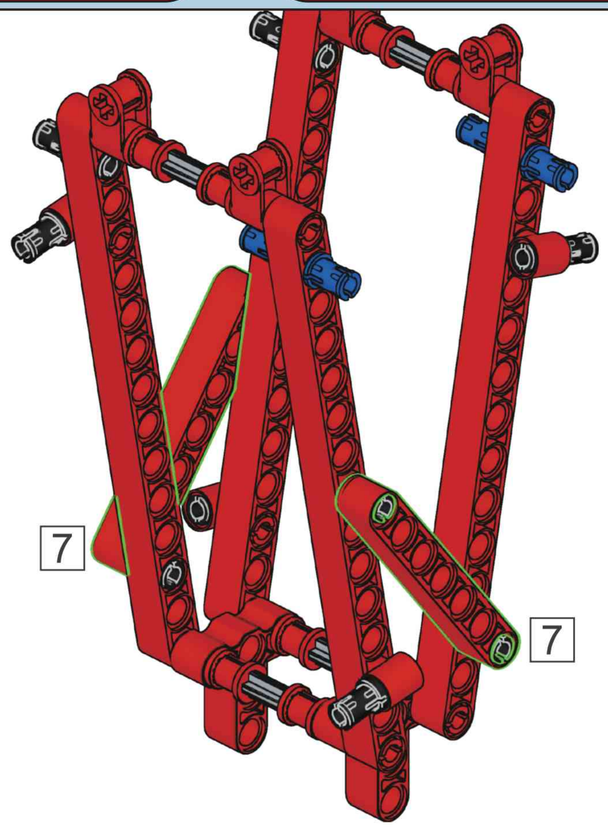

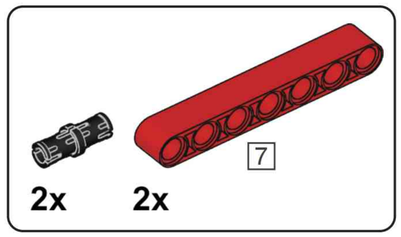

H11

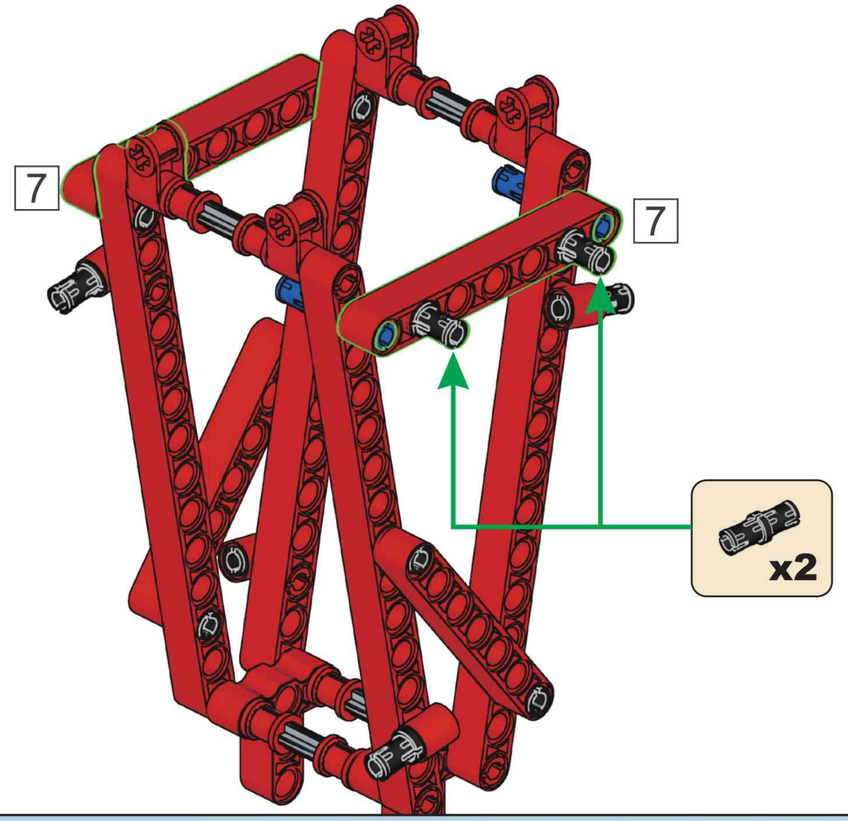

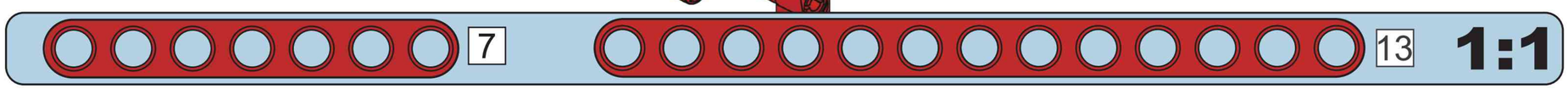

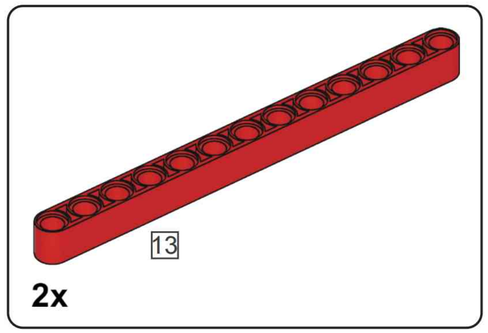

H12

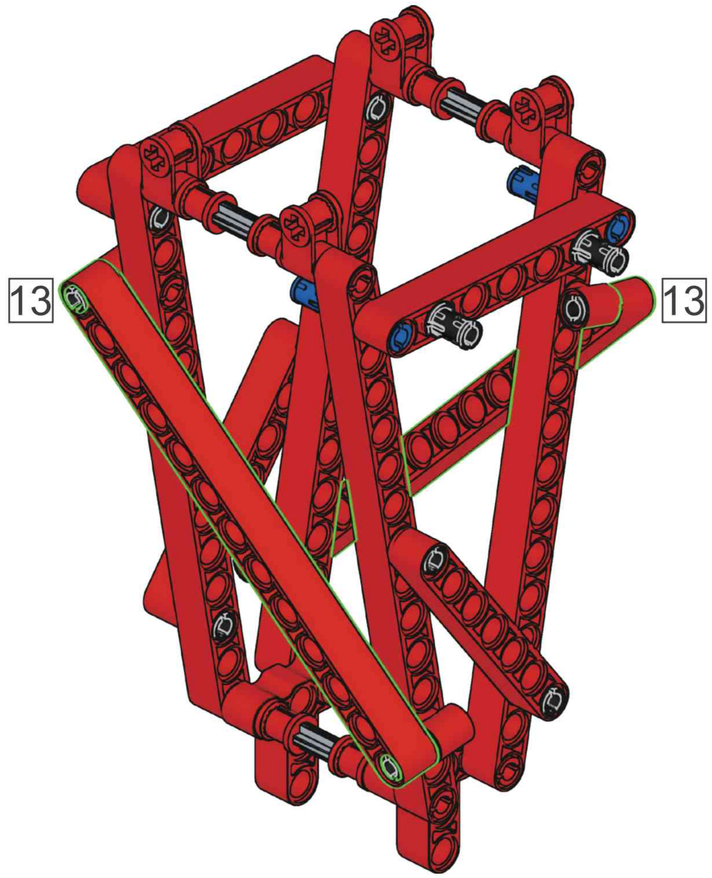

1x 1x

H13

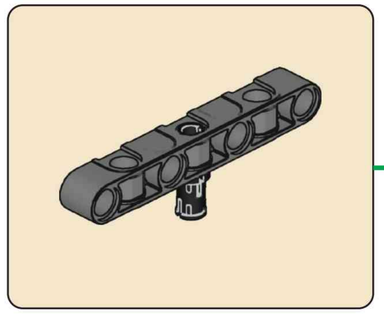

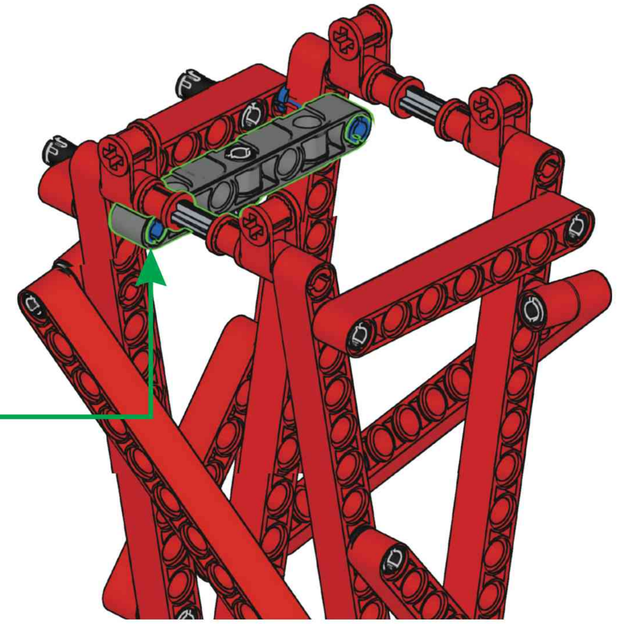

5x 1x 1x

15

H14

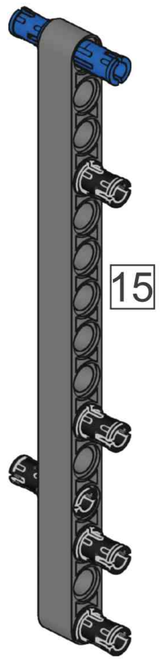

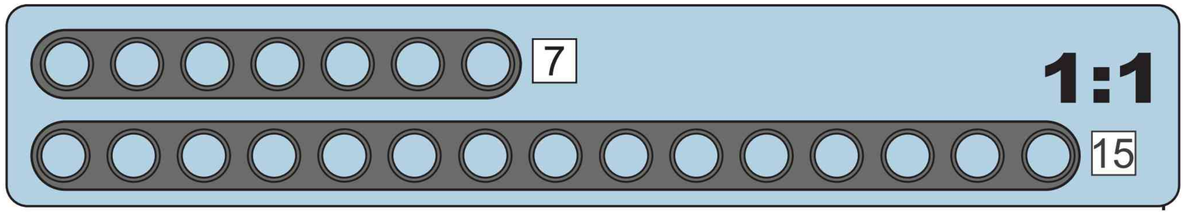

4x 1x 1x

7

H15

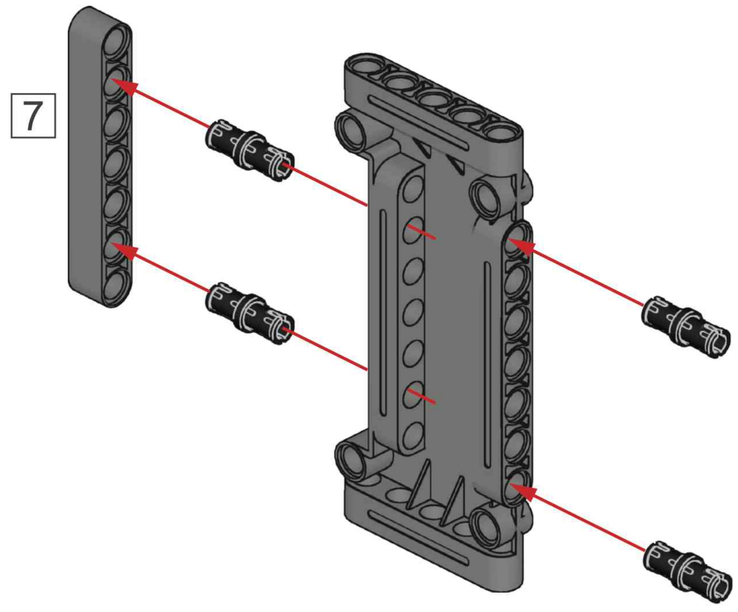

H16

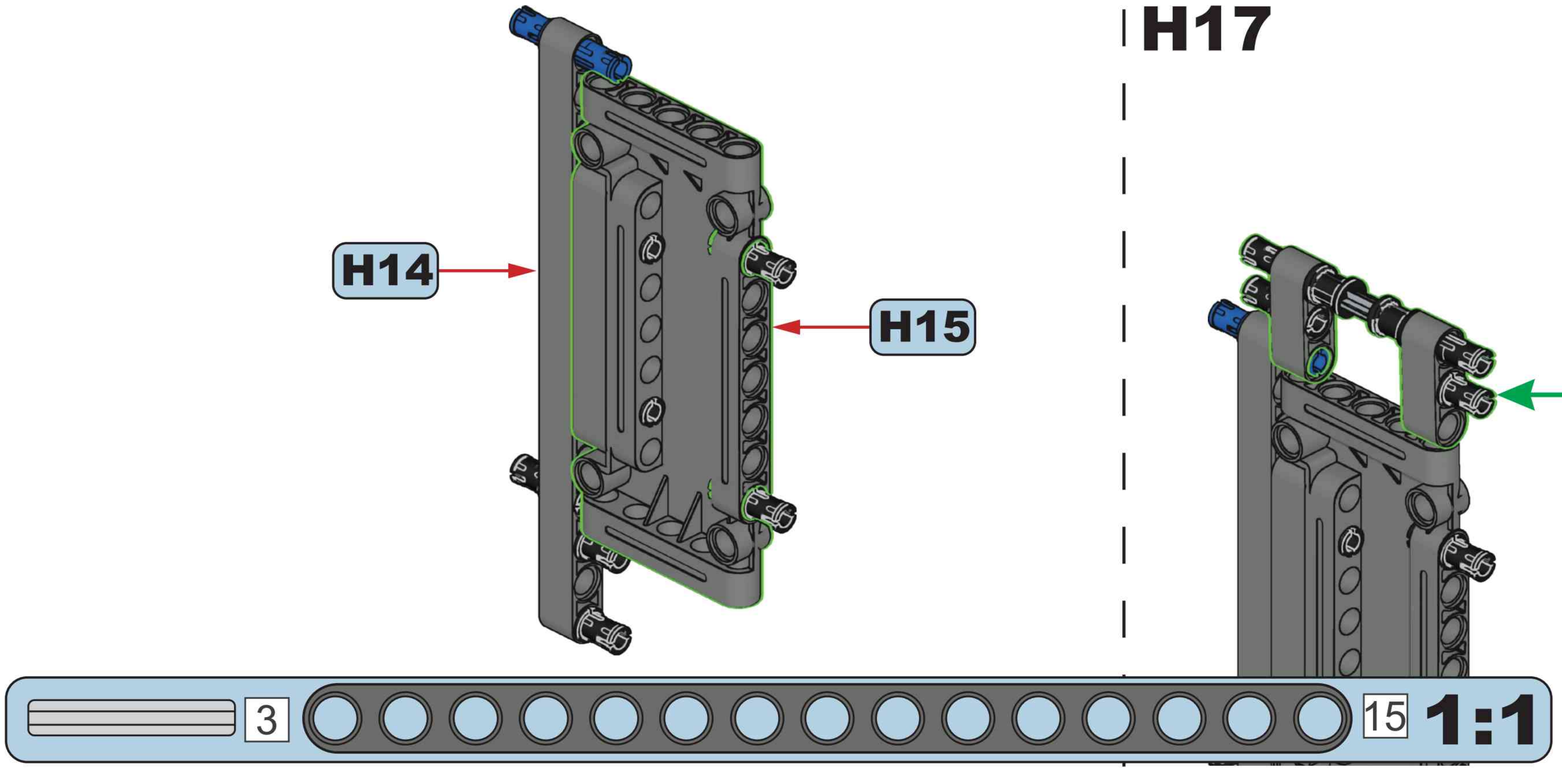

H17



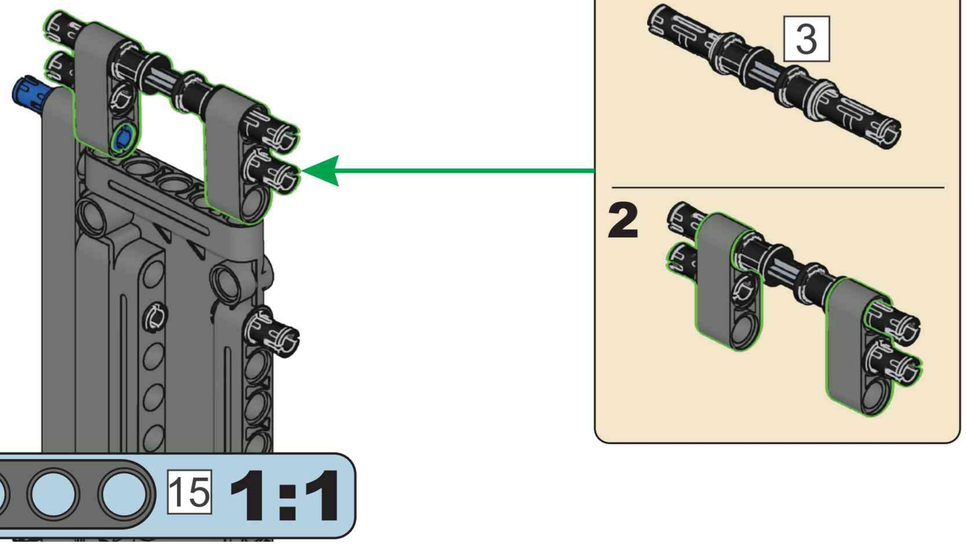

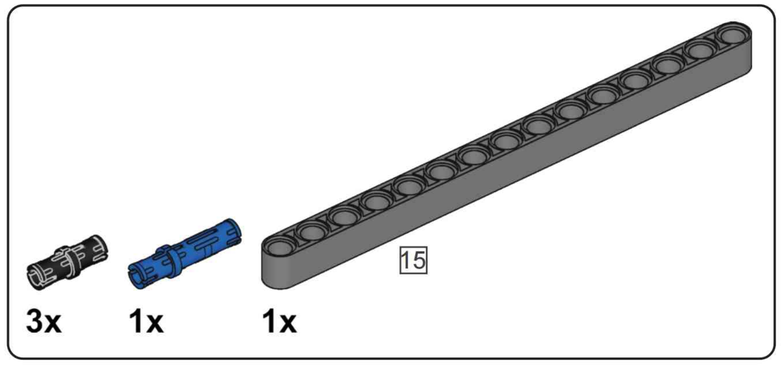

H18

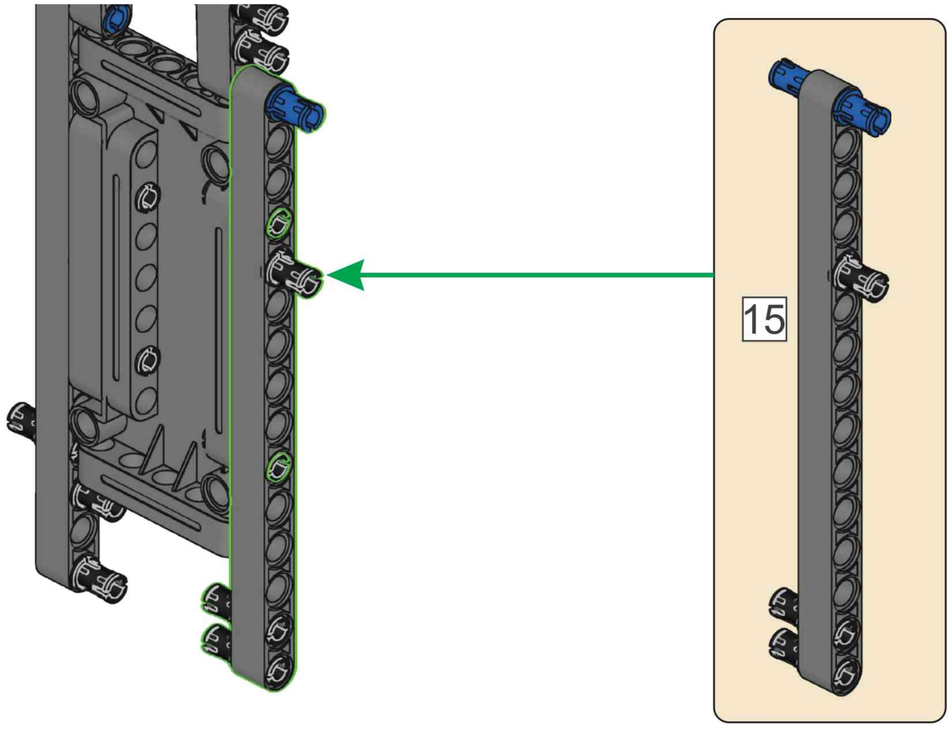

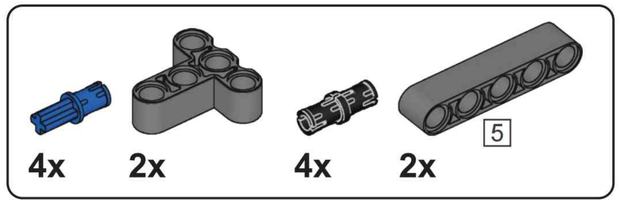

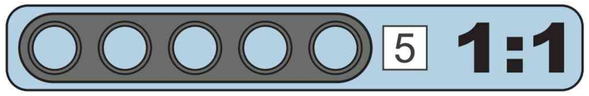

H19

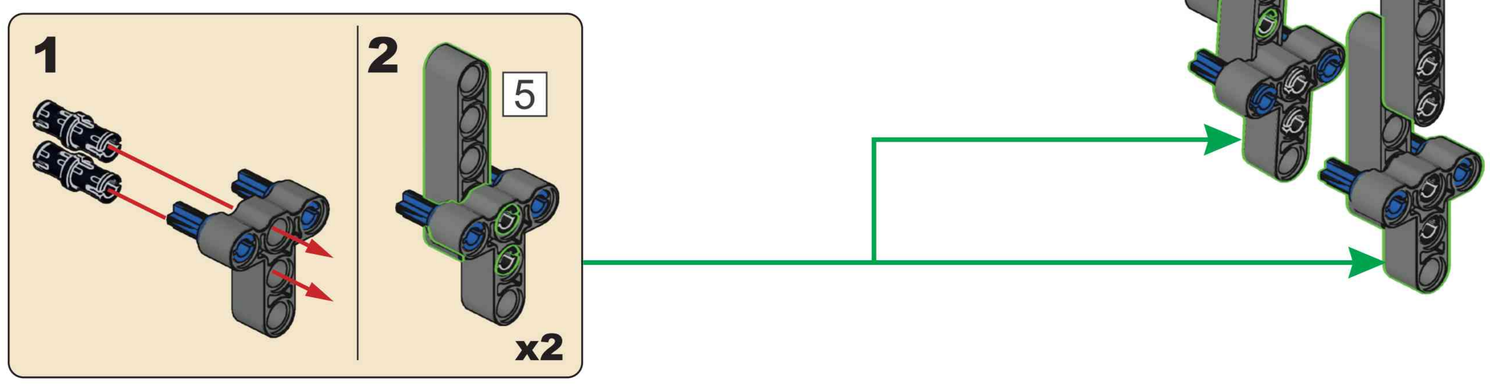

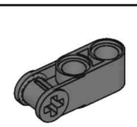

H20

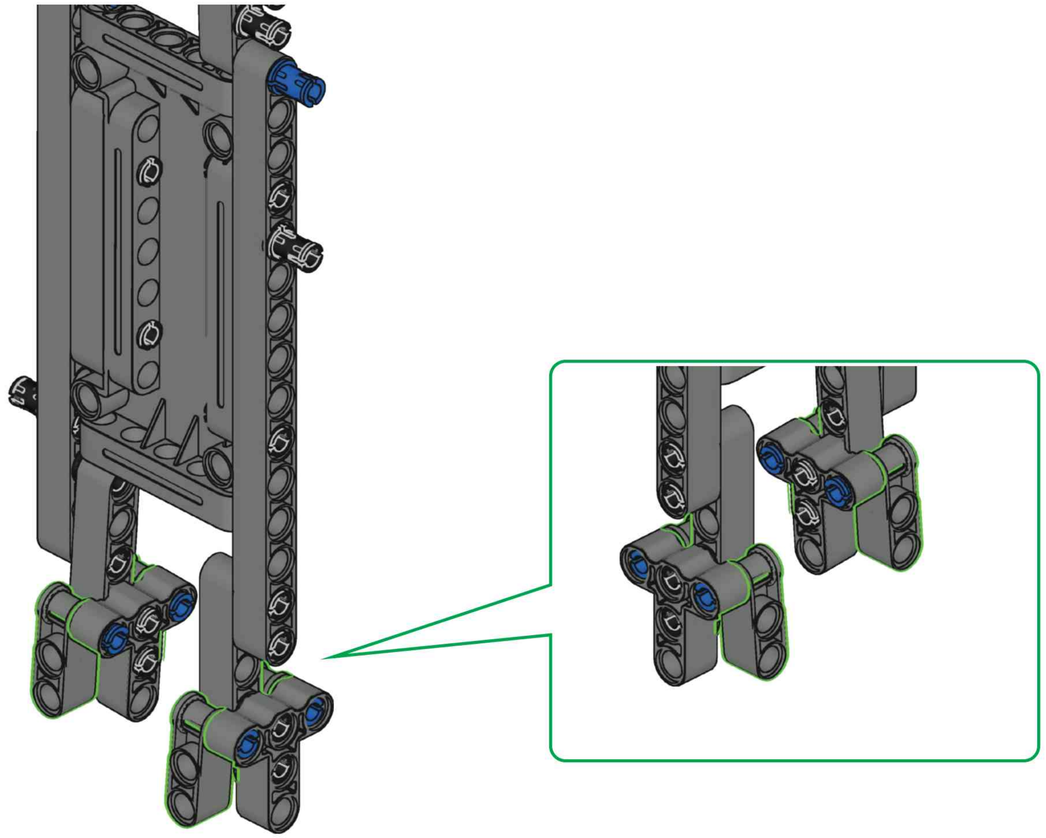

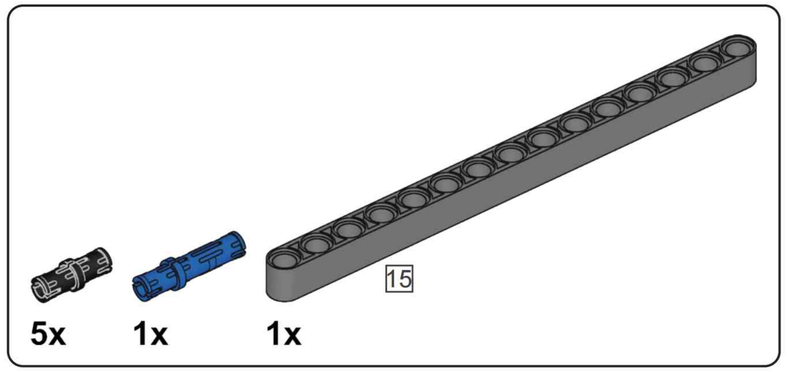

H21

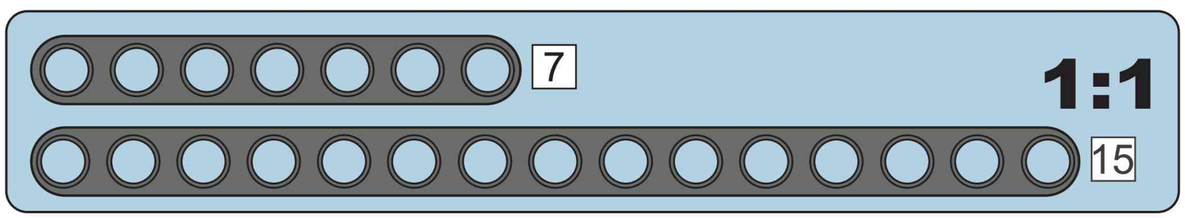

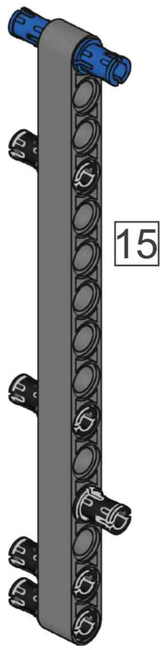

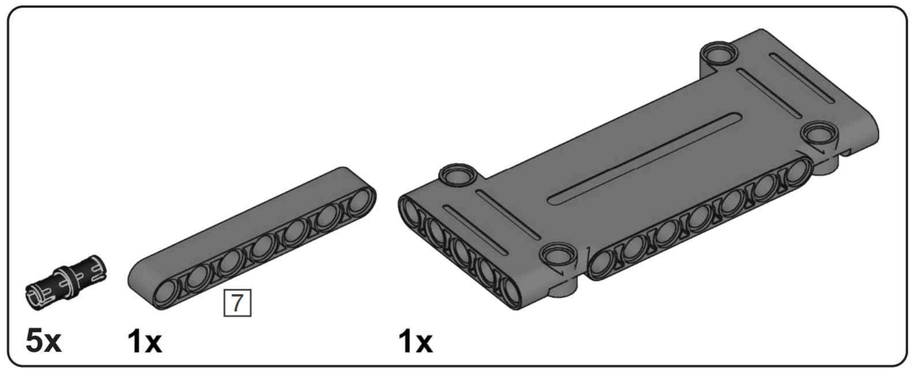

H22

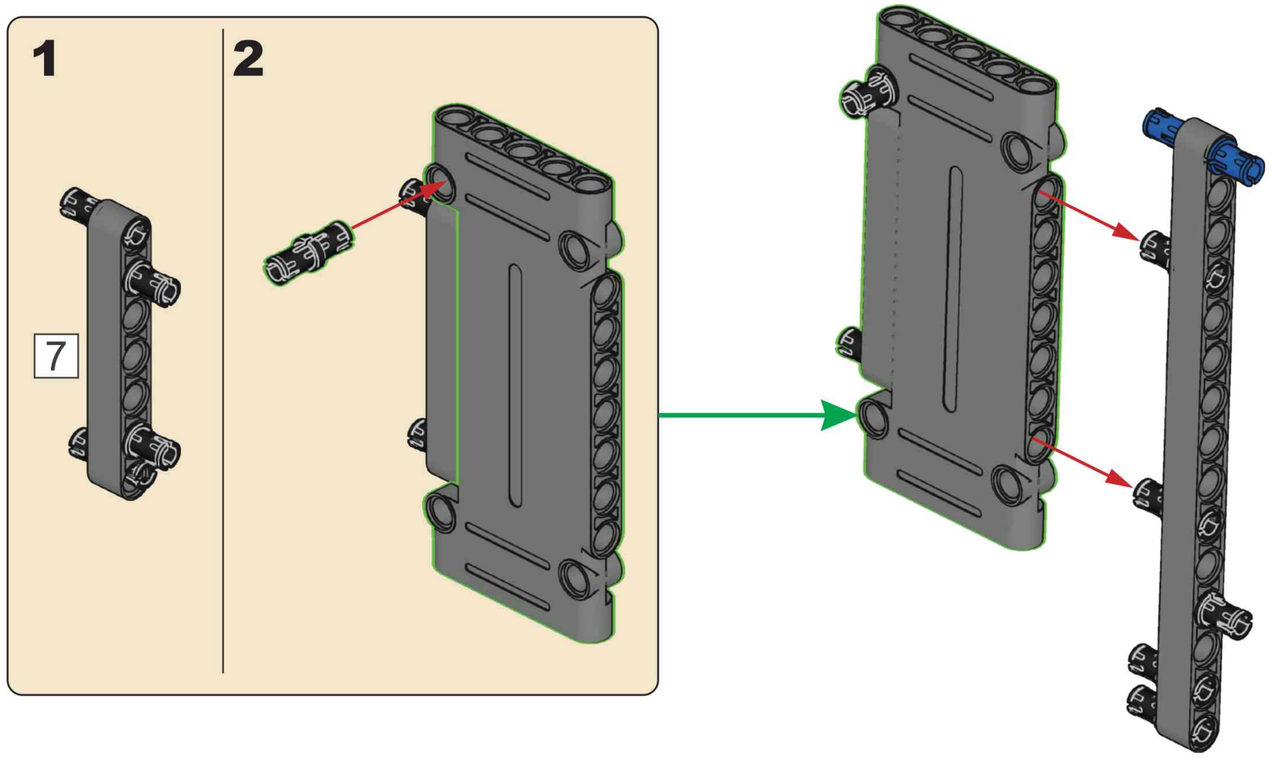

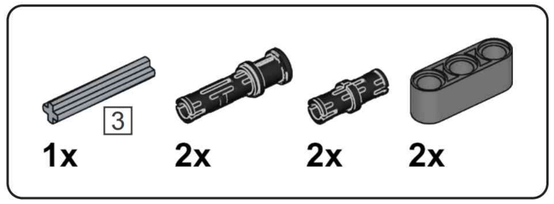

H23

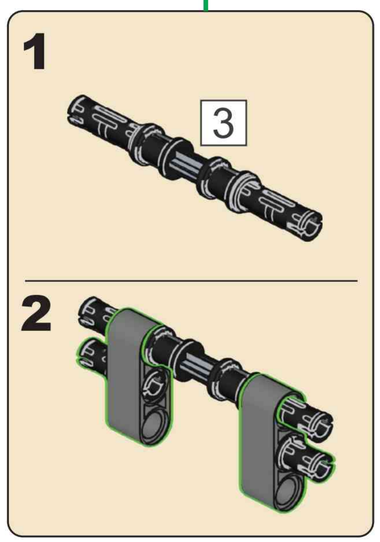

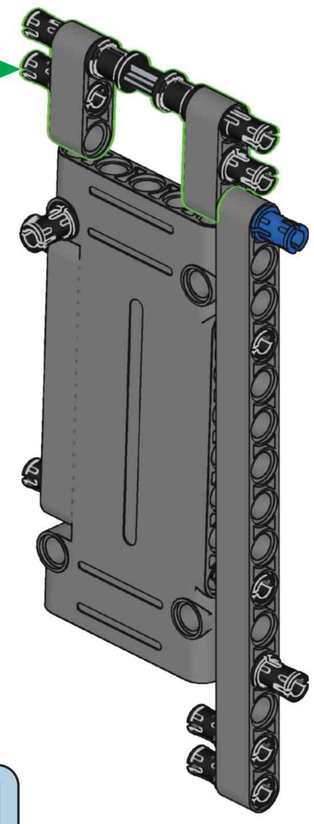

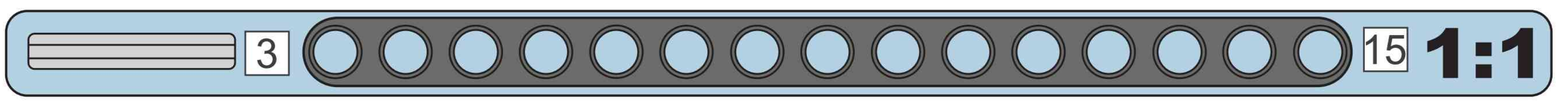

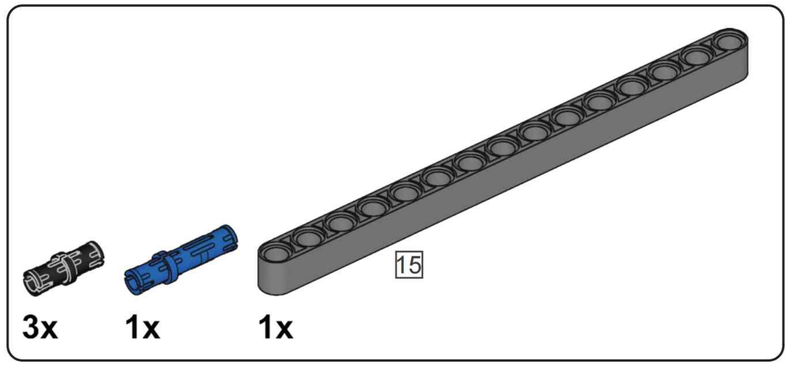

H24

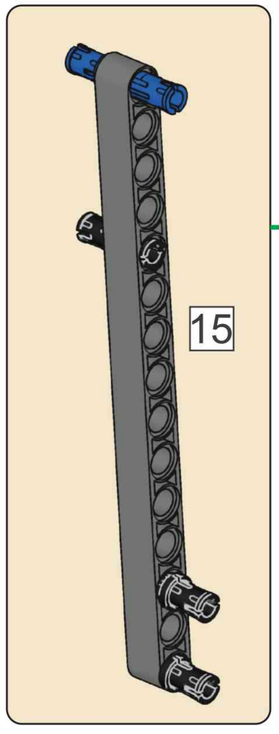

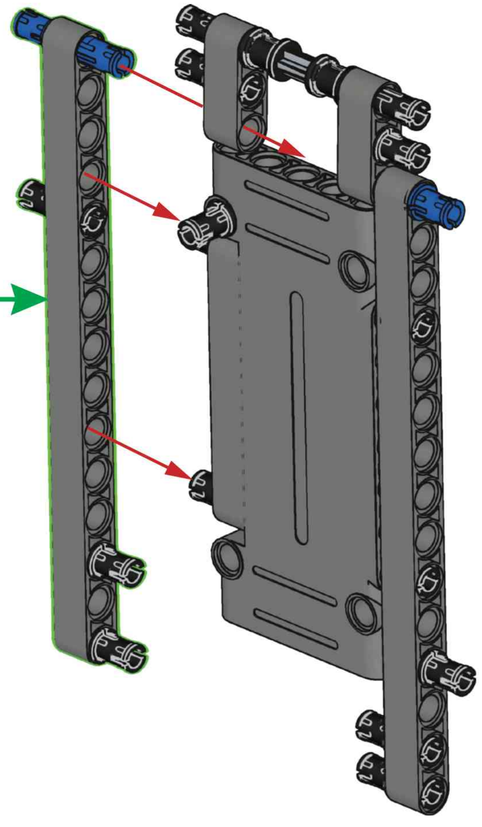

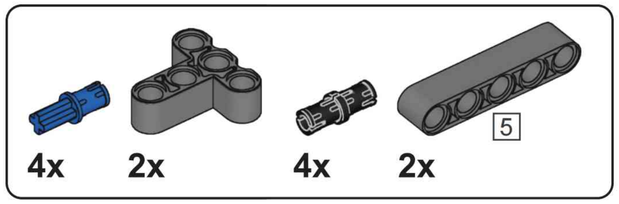

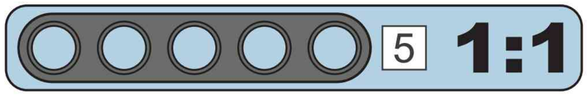

H25

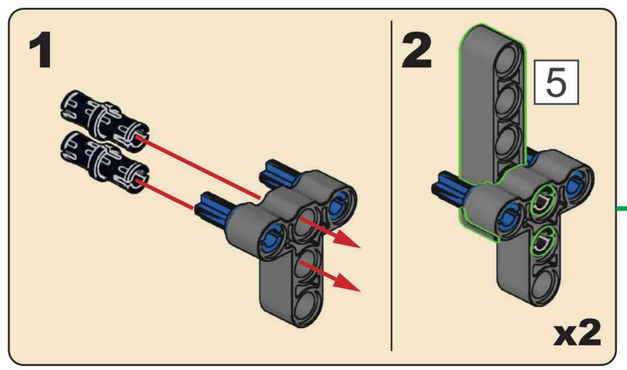

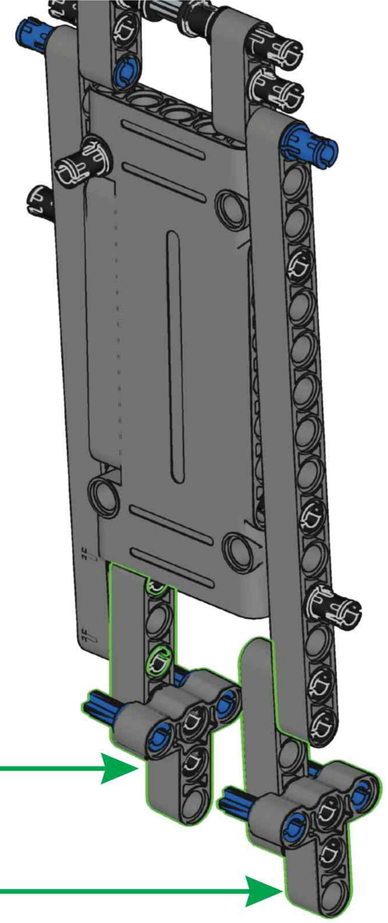

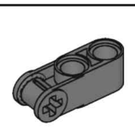

H26

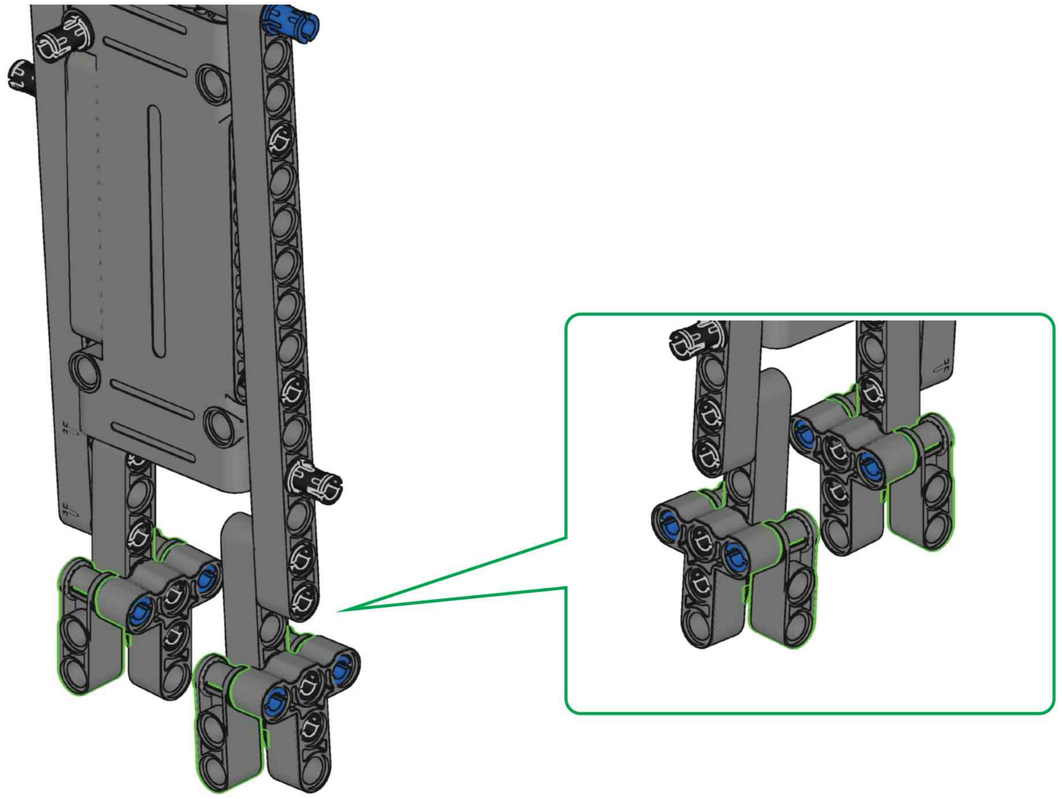

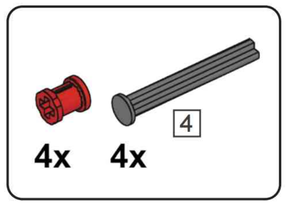



H27

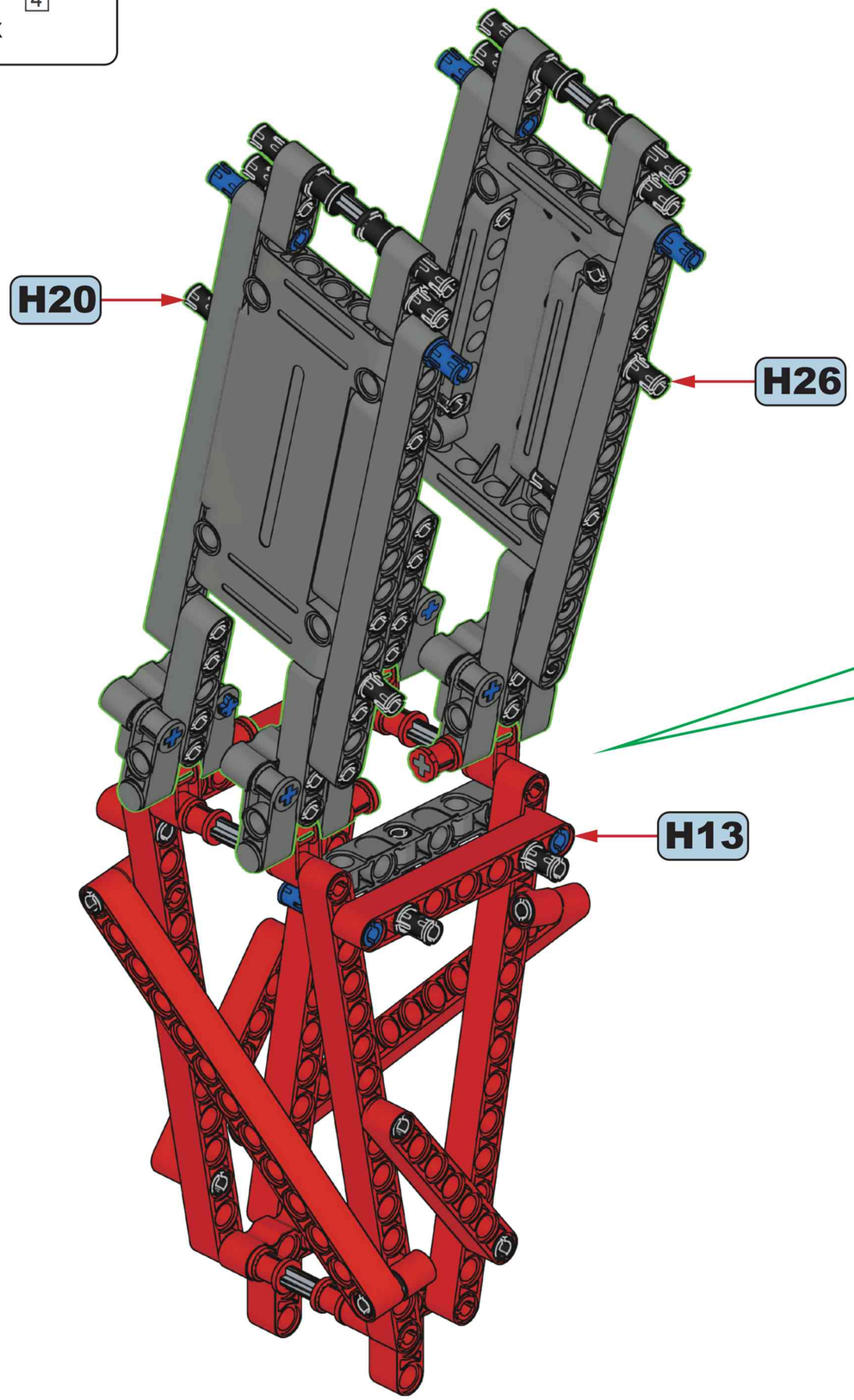

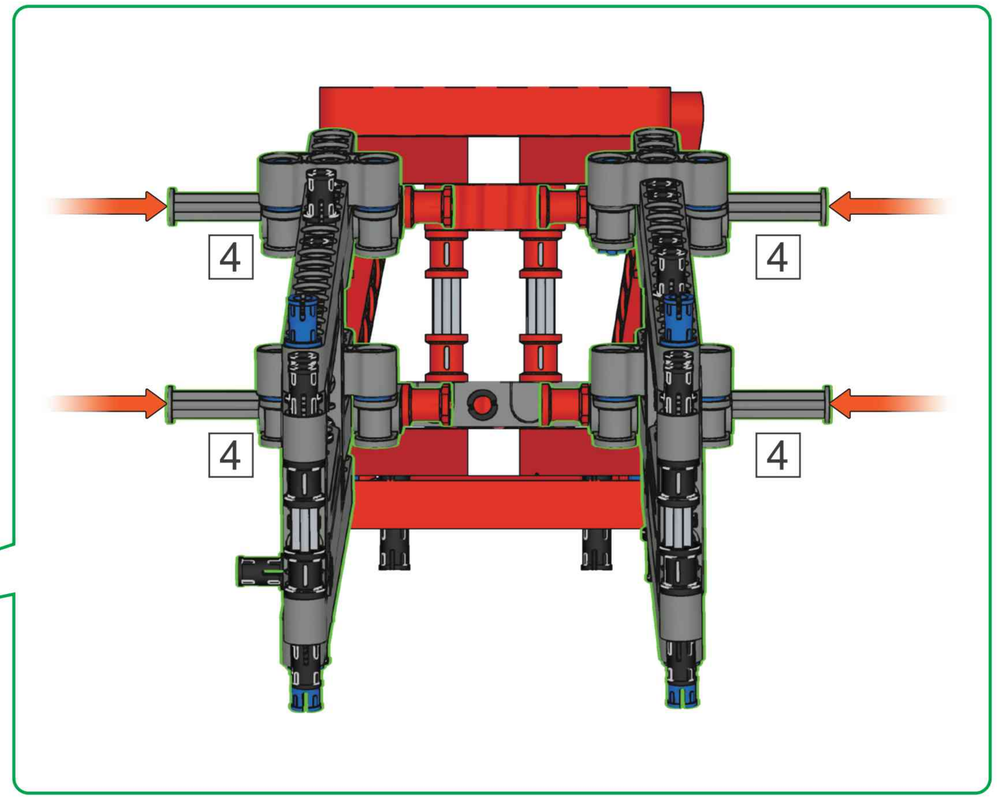

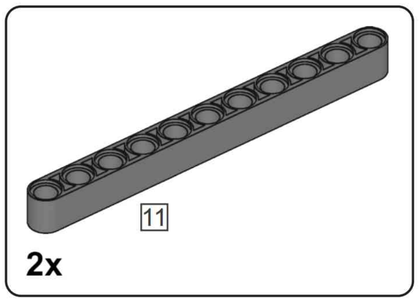

H28

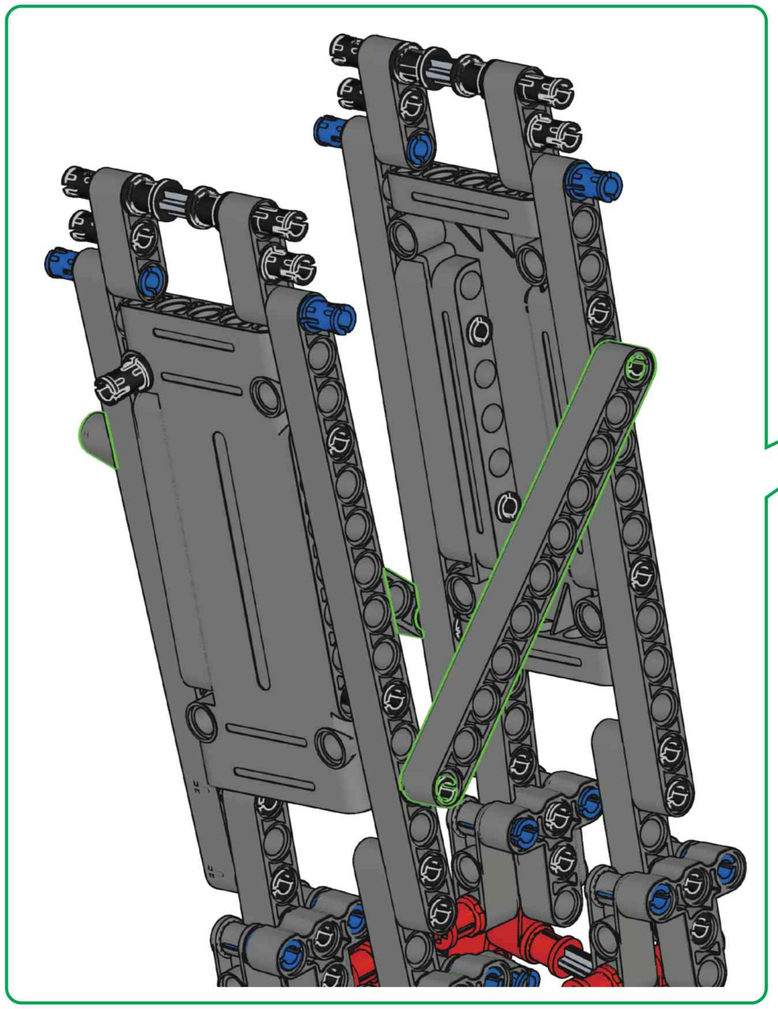

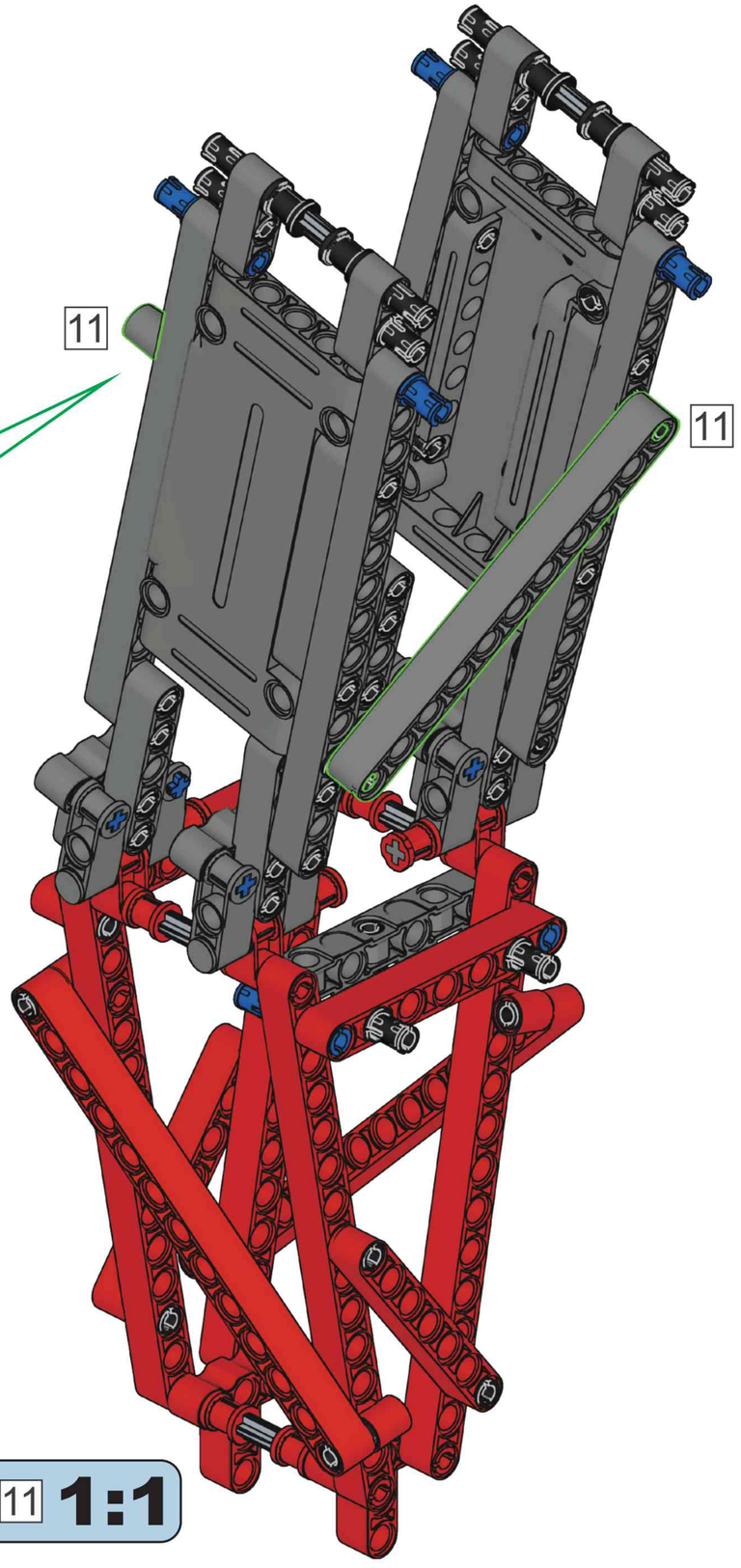

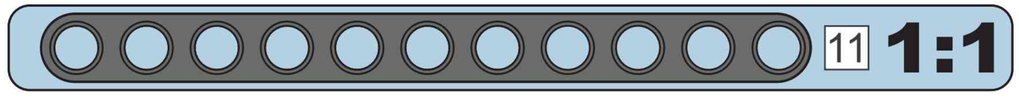

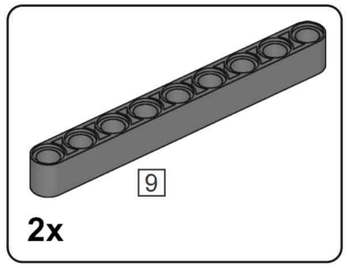

H29

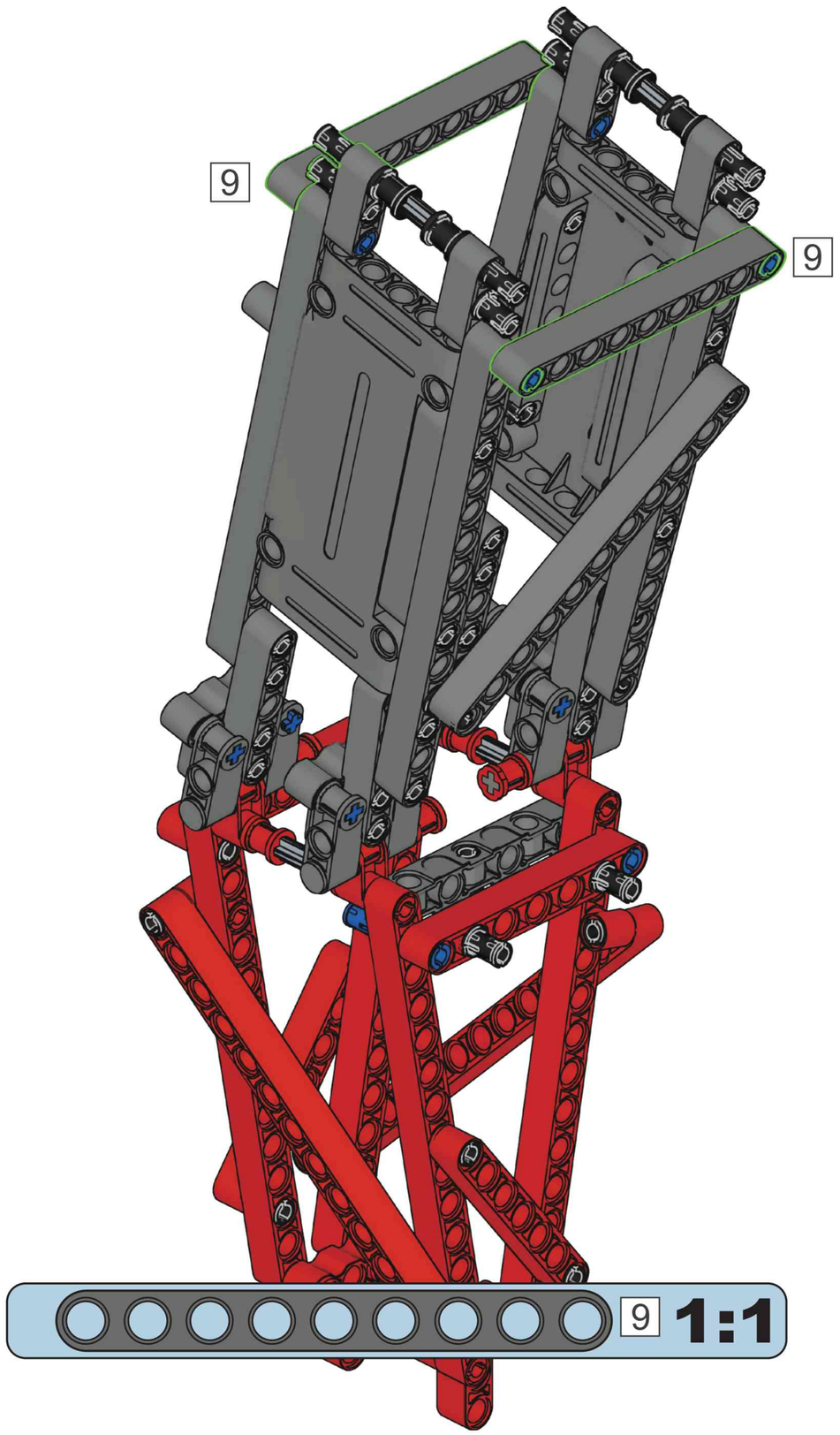

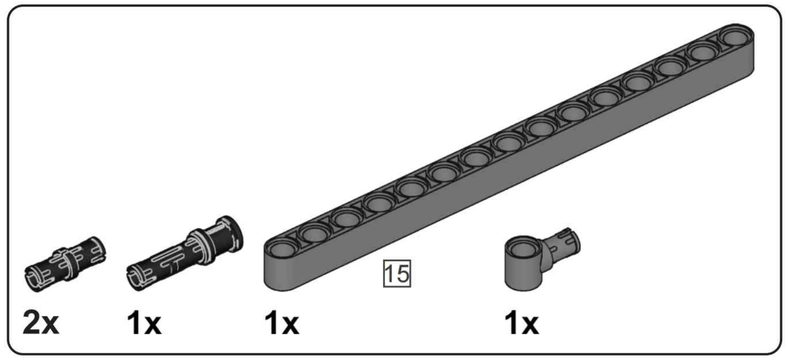

H30

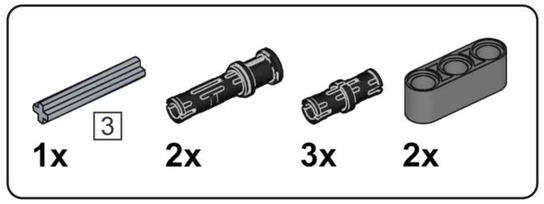

H31

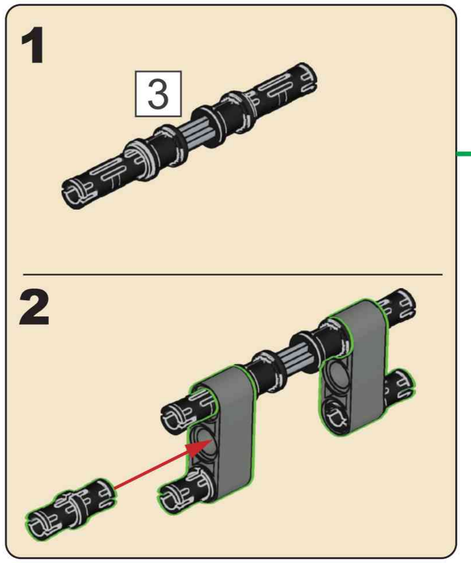

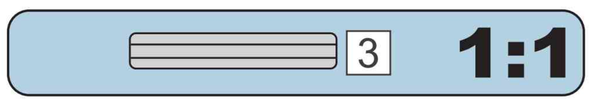

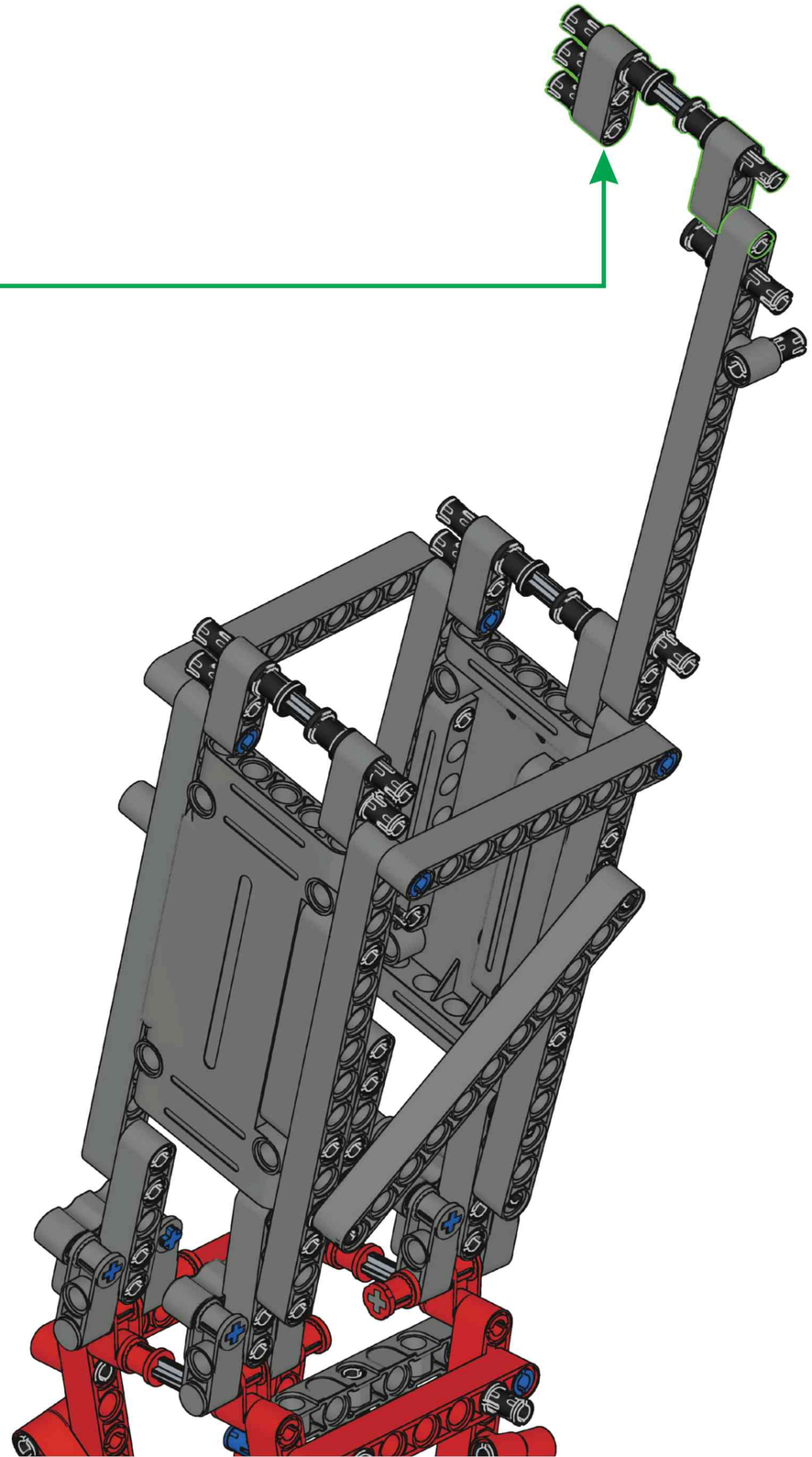

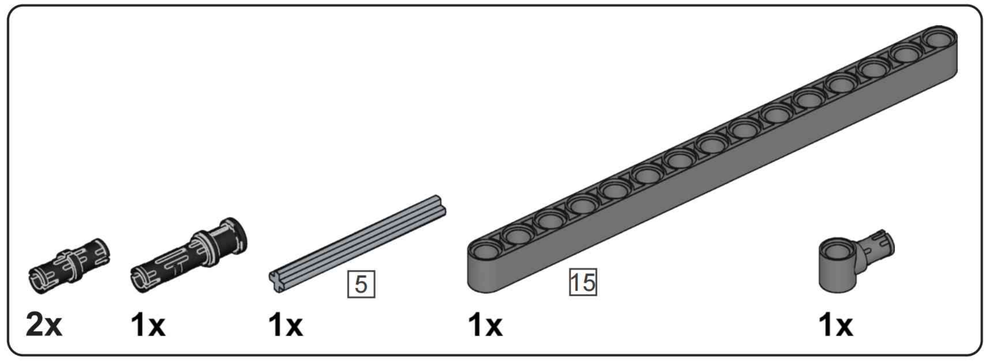

H32

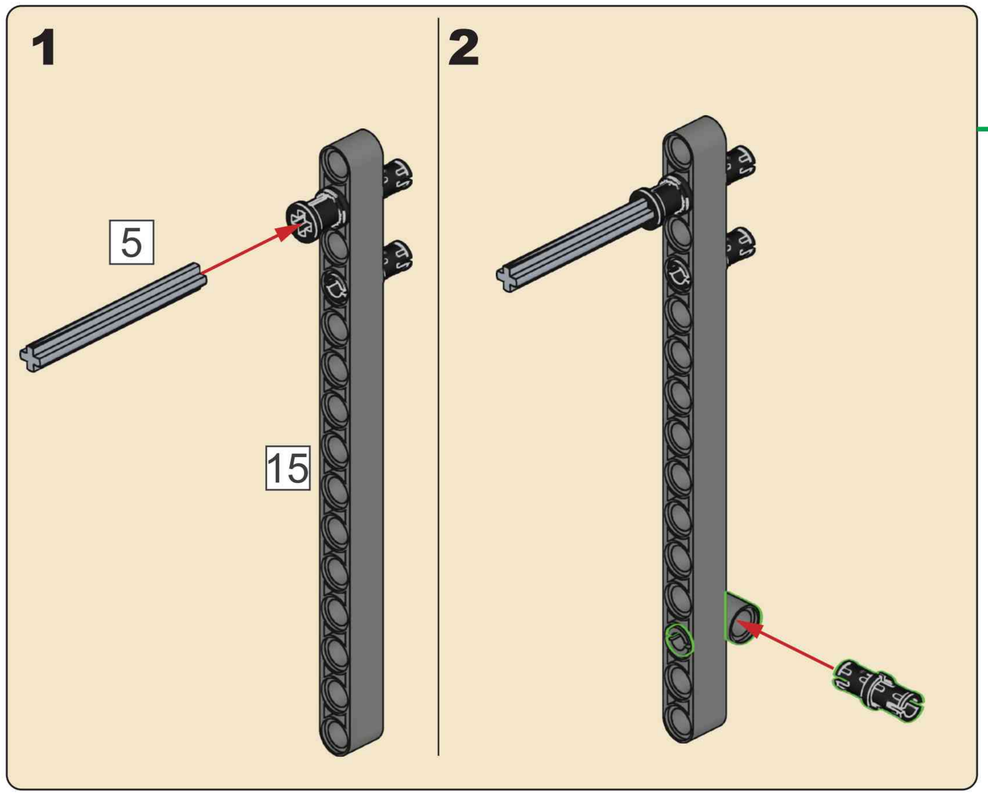

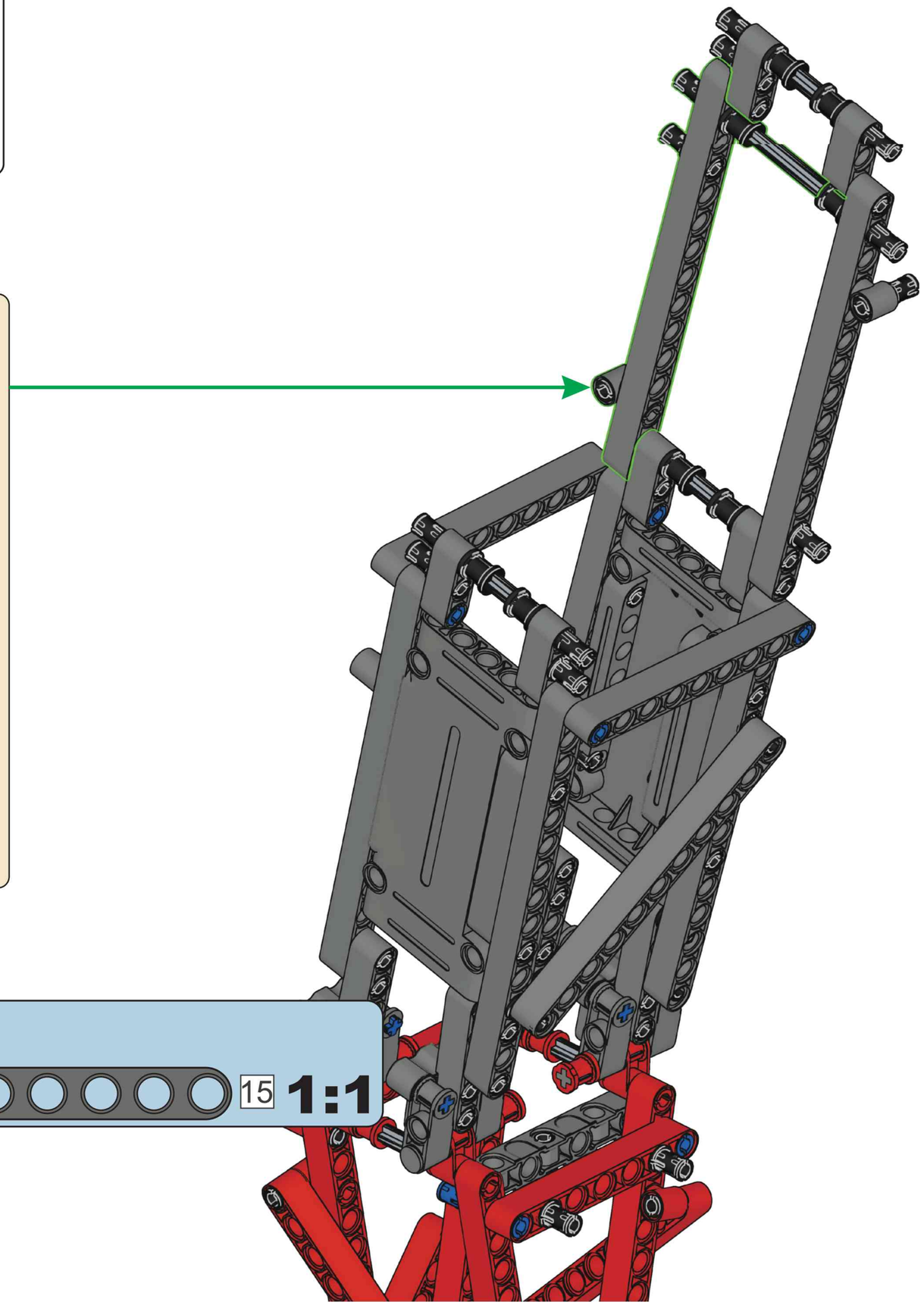

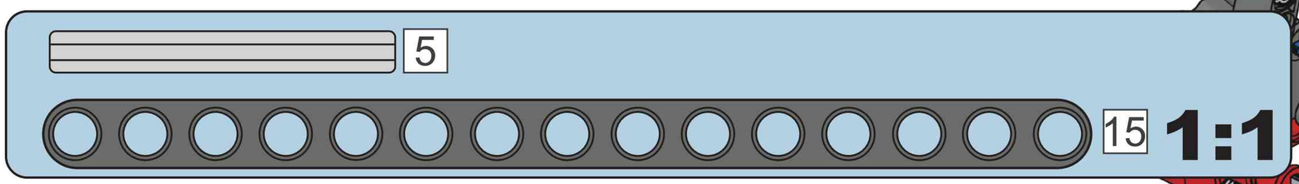

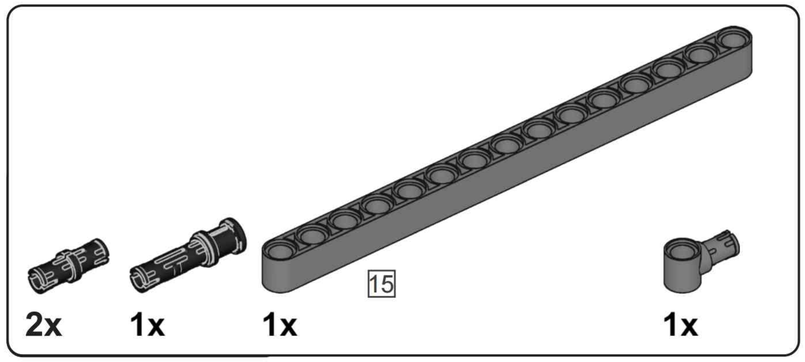

H33

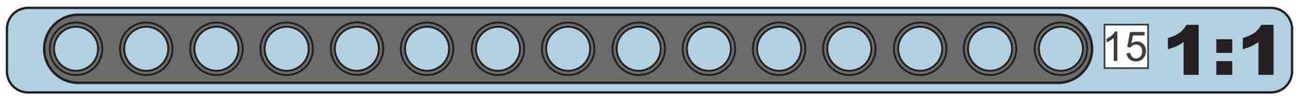

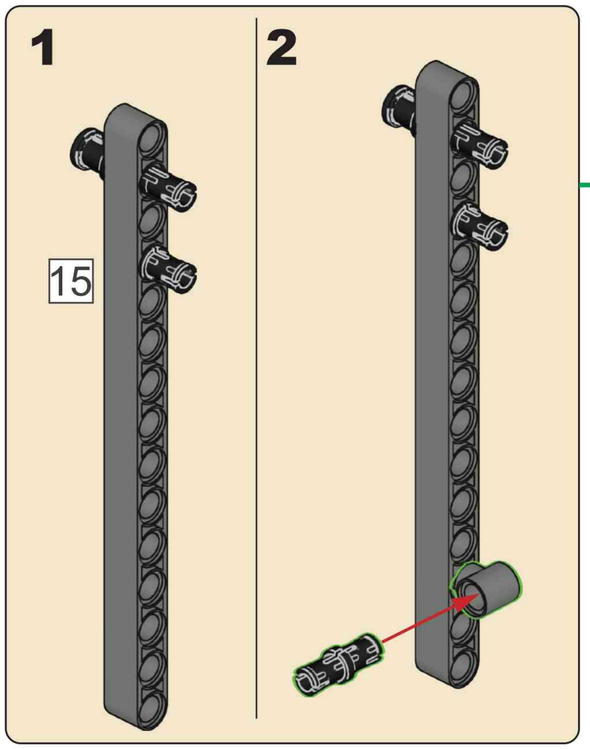

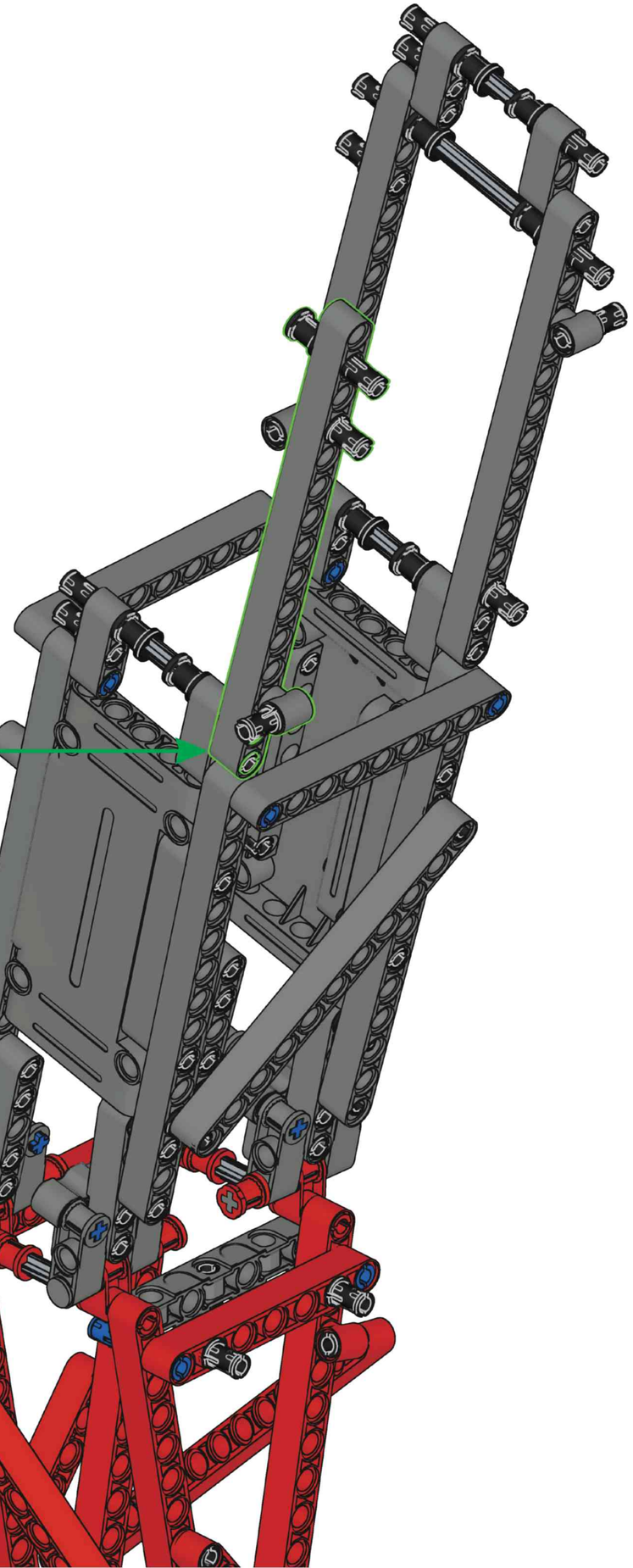

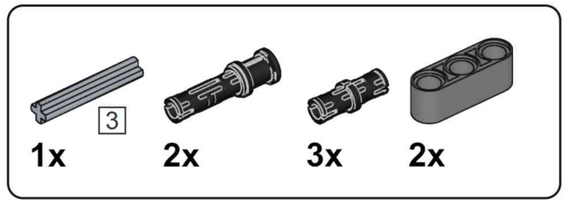

H34

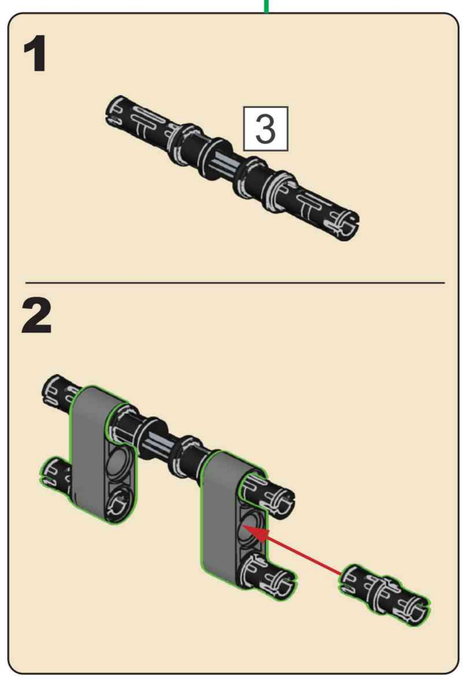

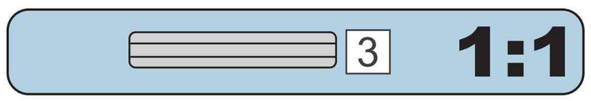

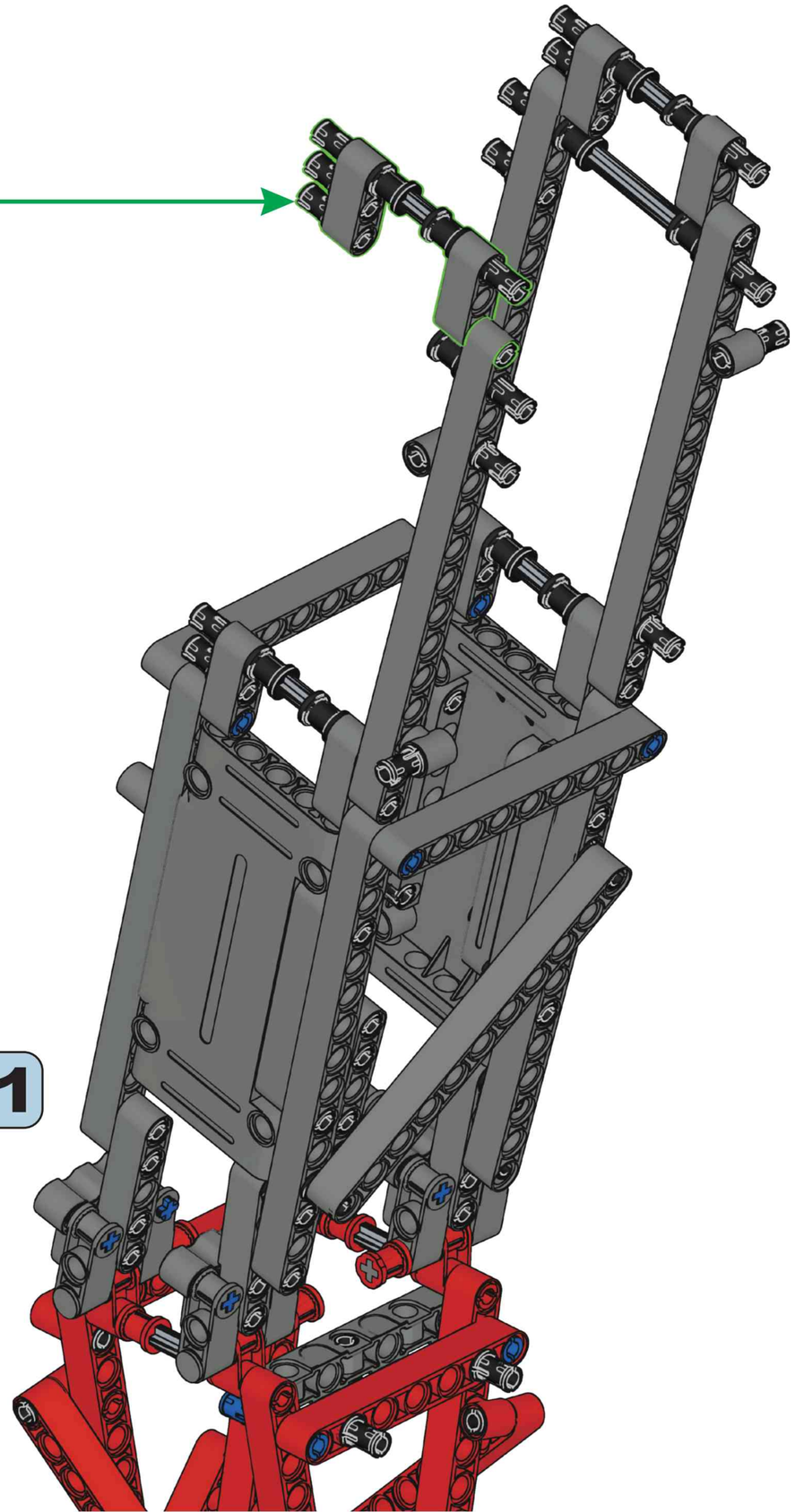

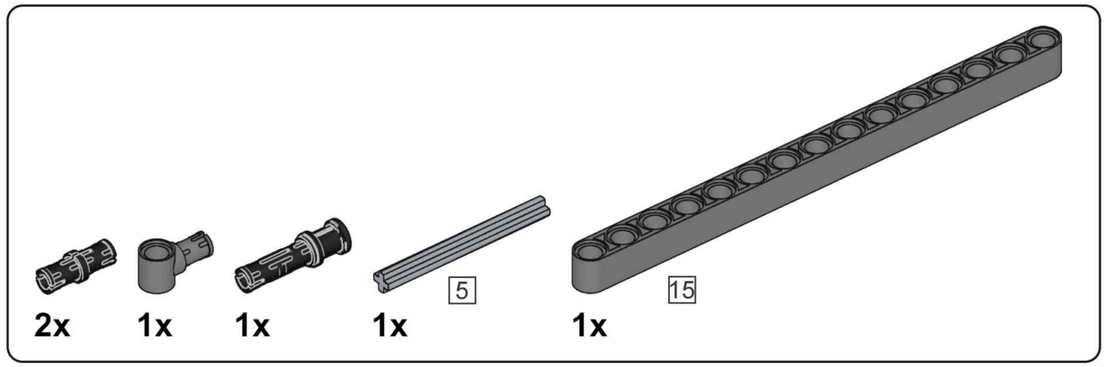

H35

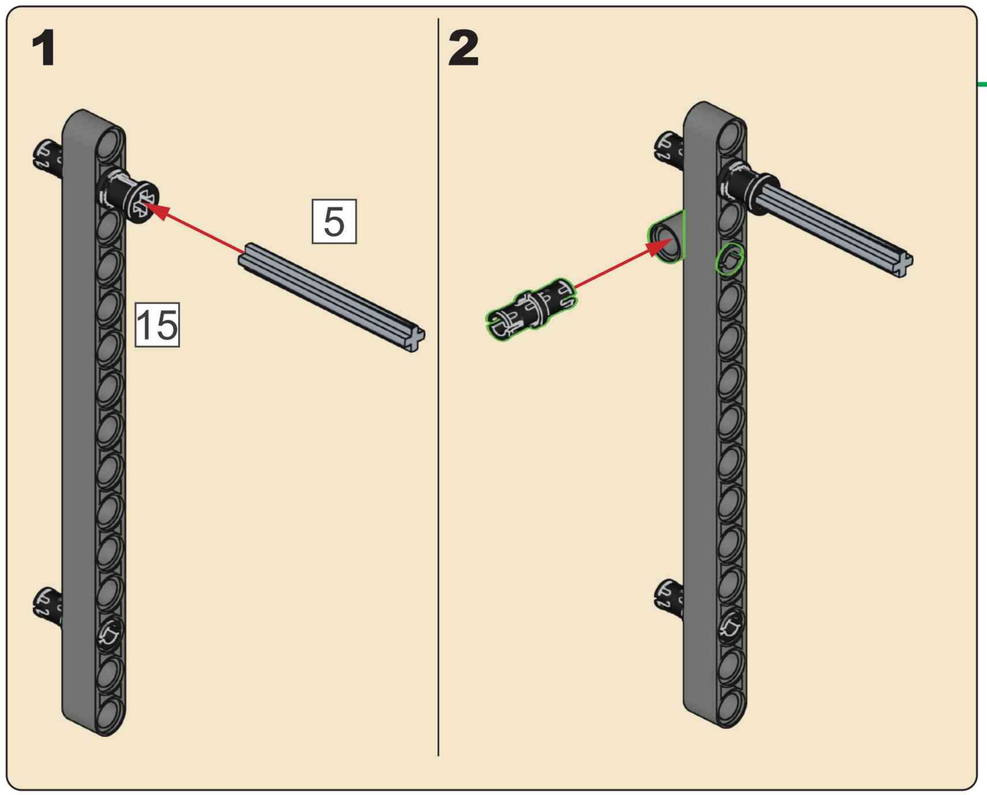

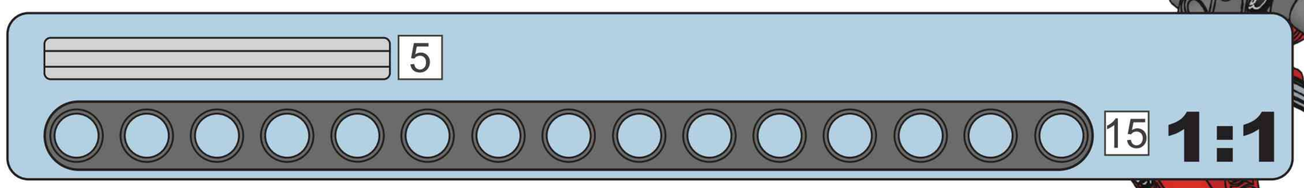

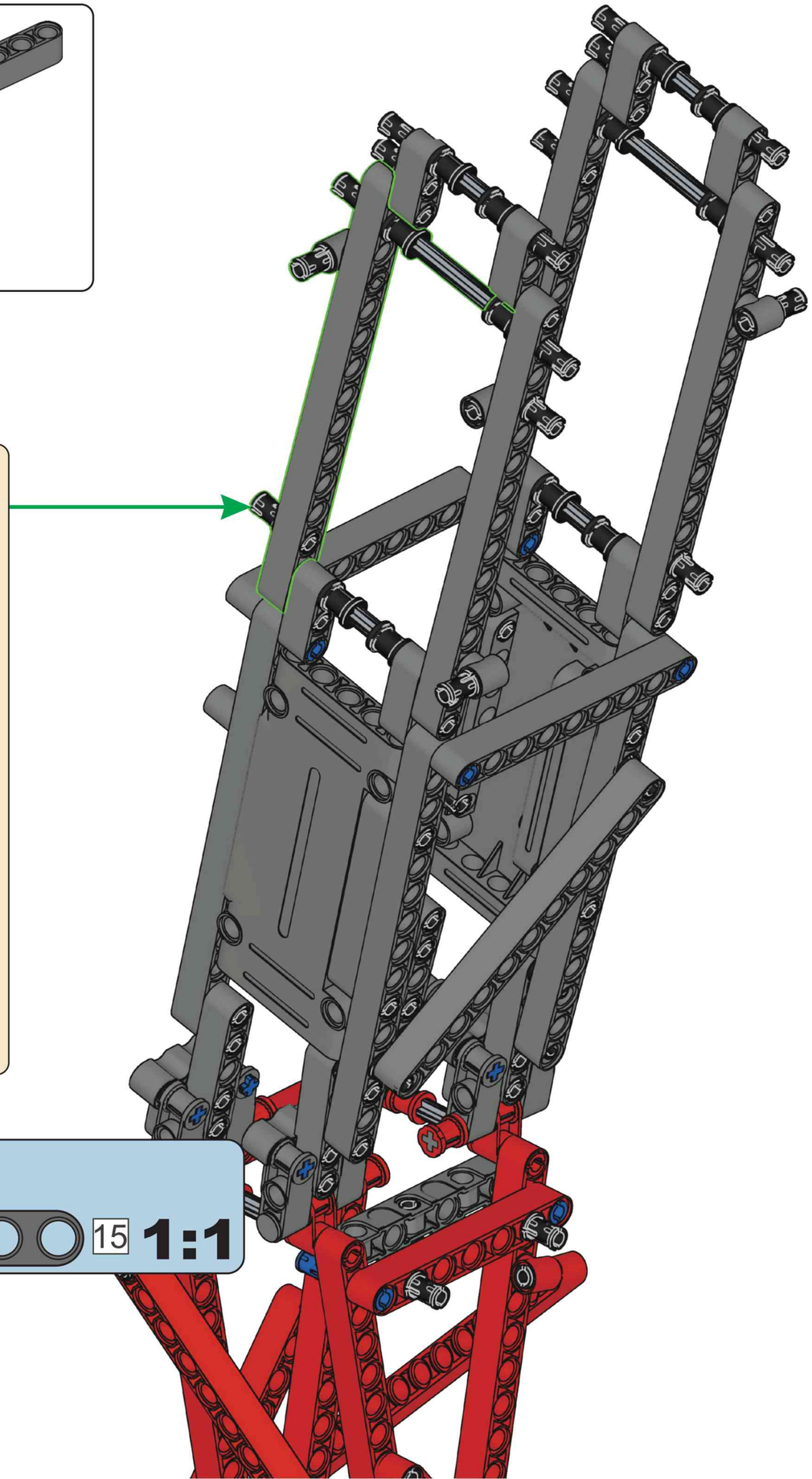

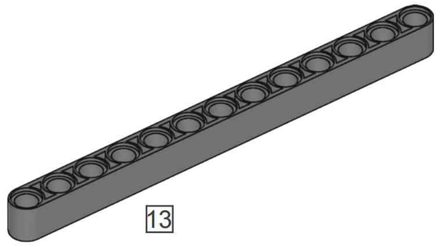

2x

H36

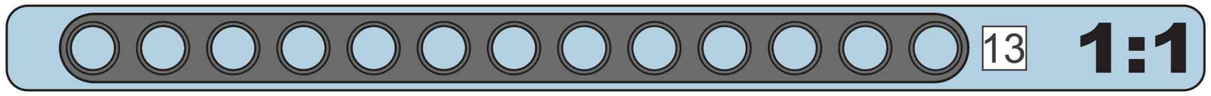

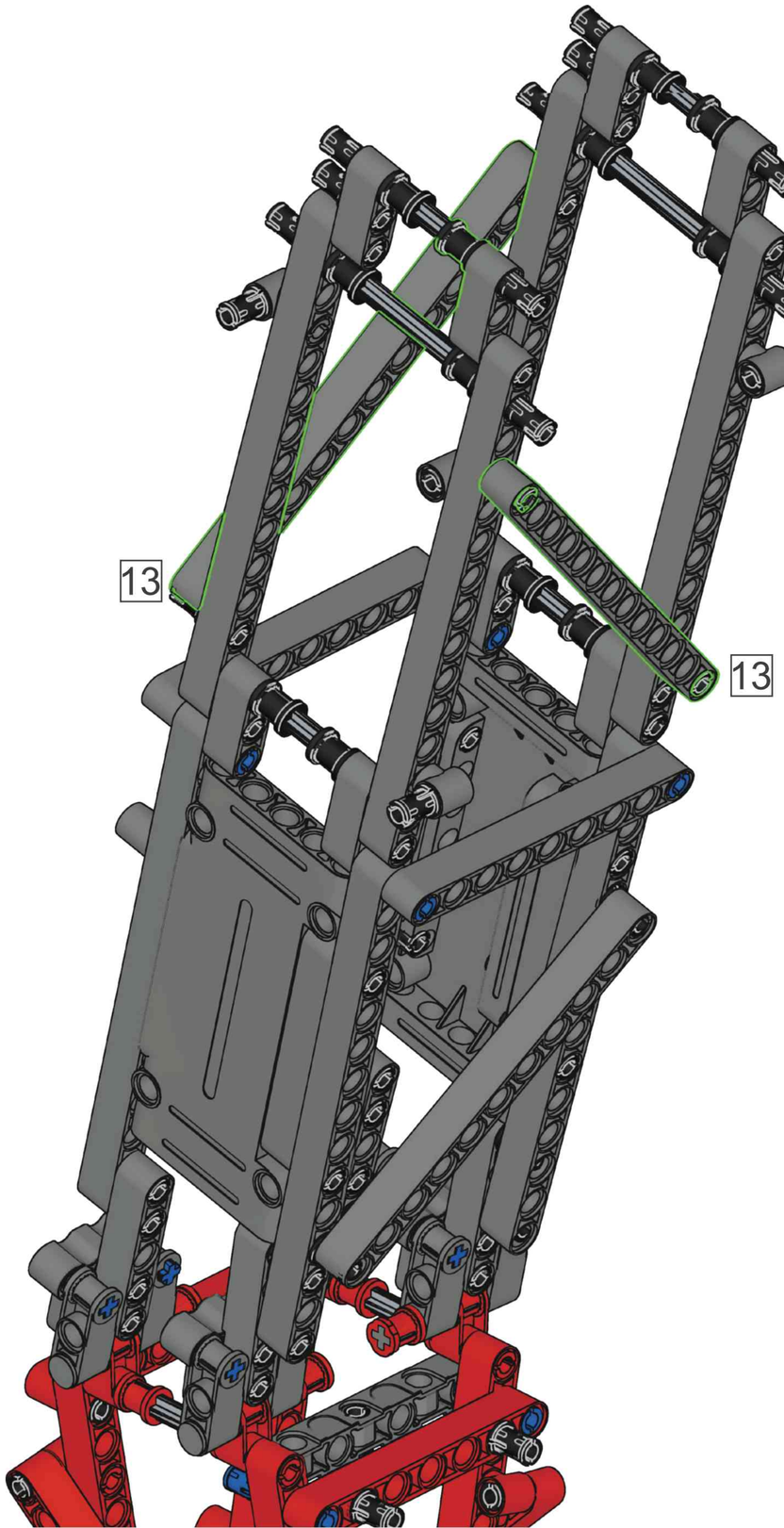

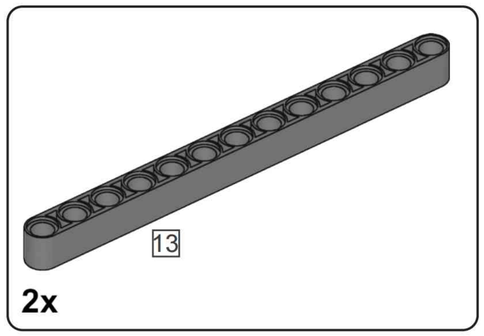

H37

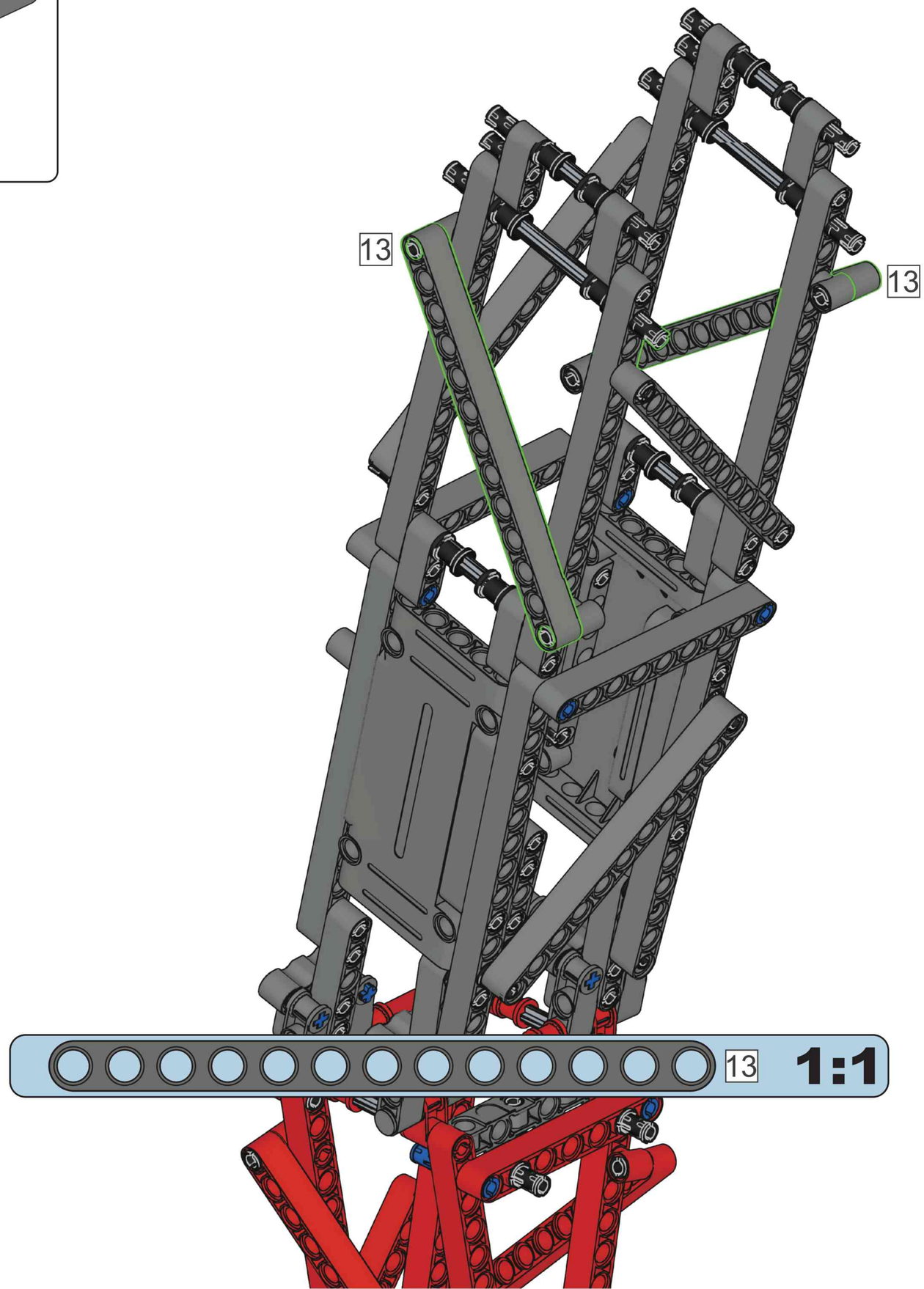

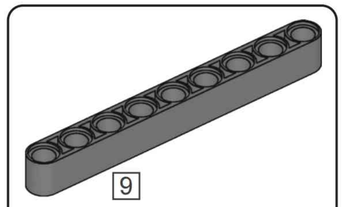

2x

H38

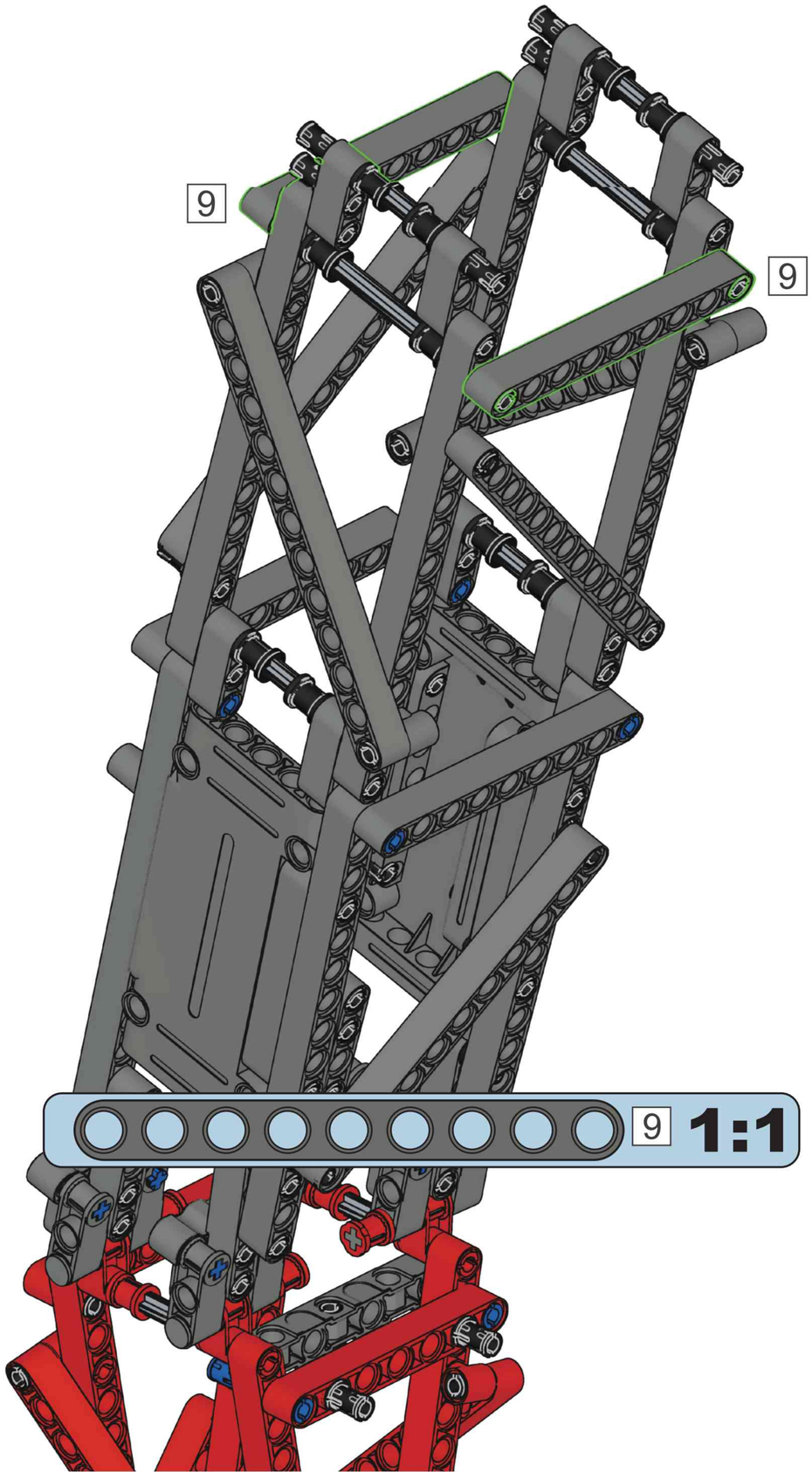

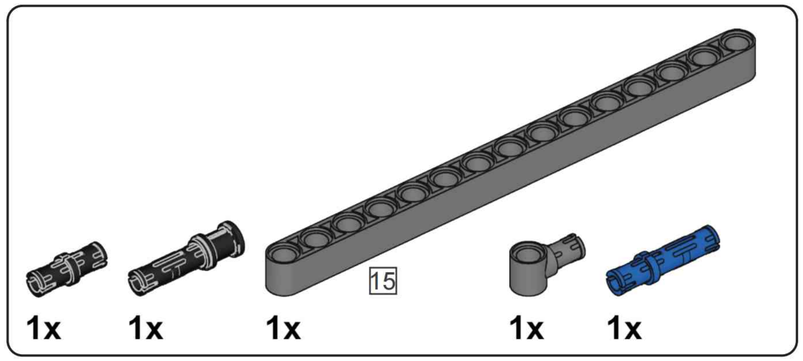

H39

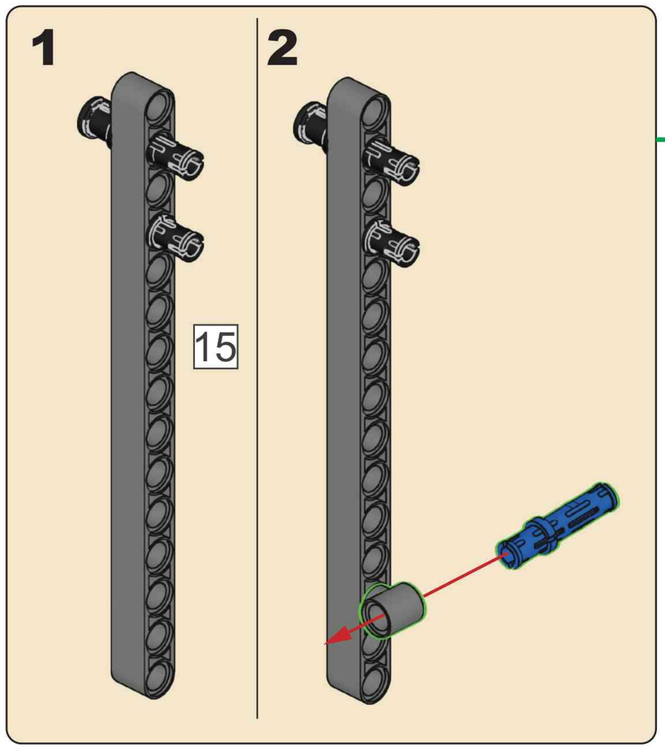

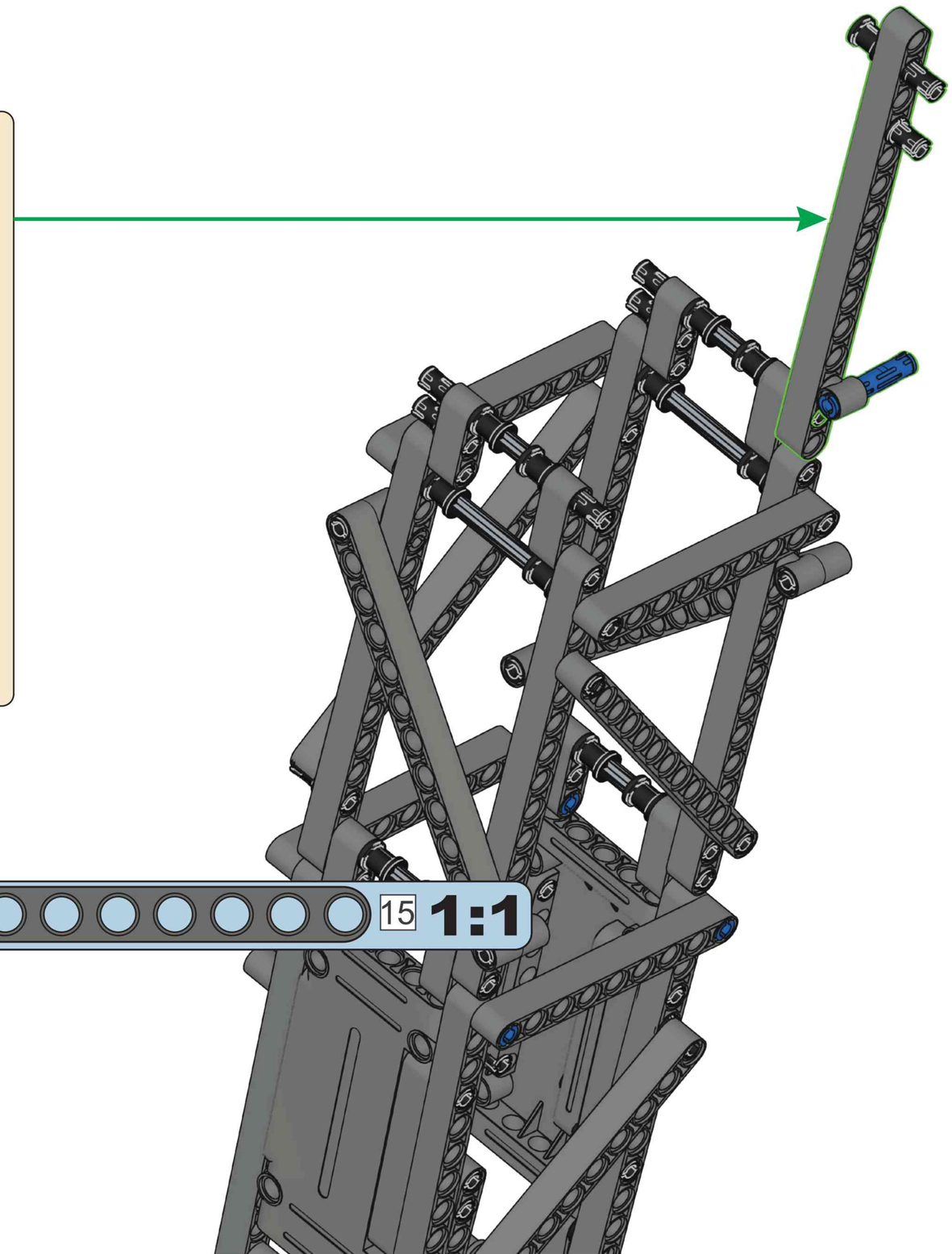

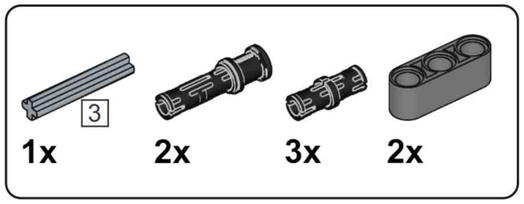

H40

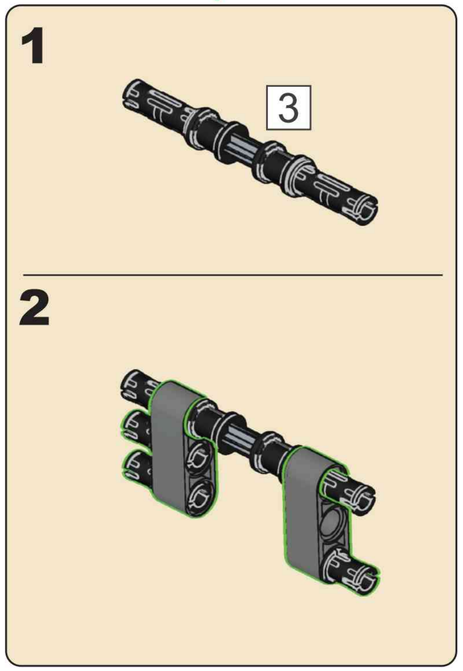

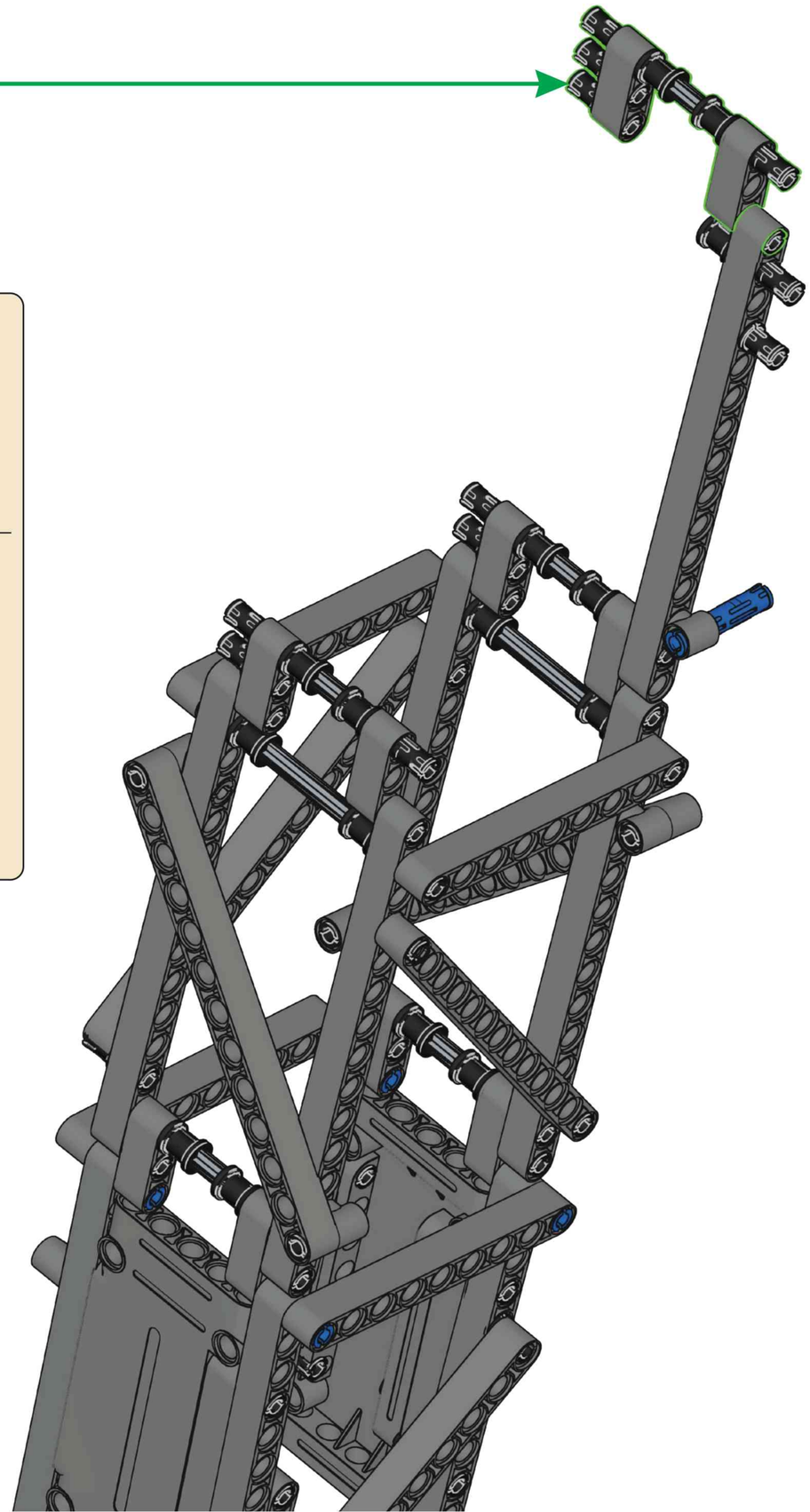

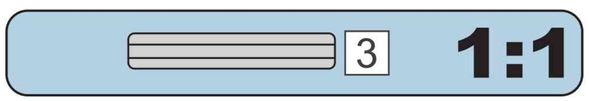

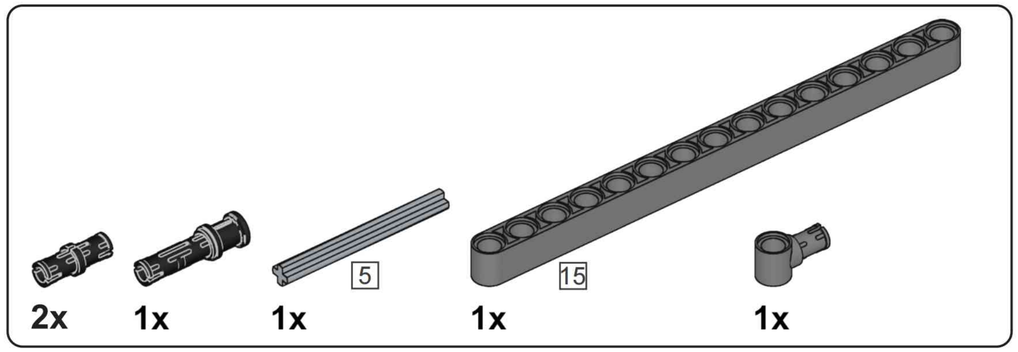

H41

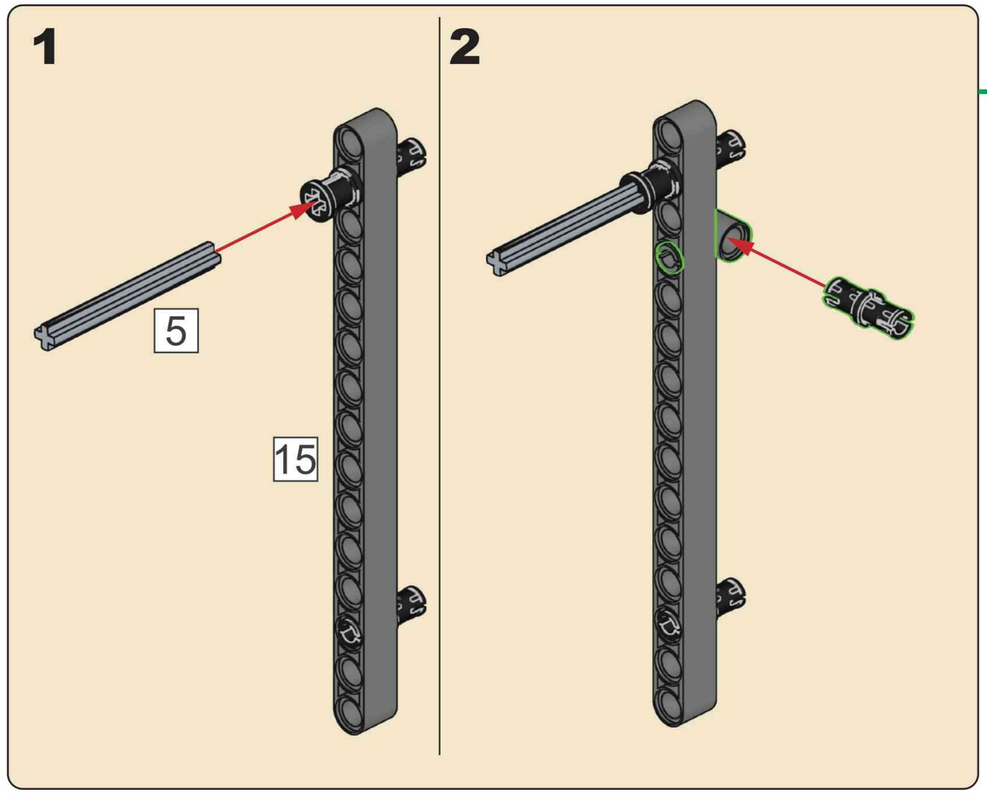

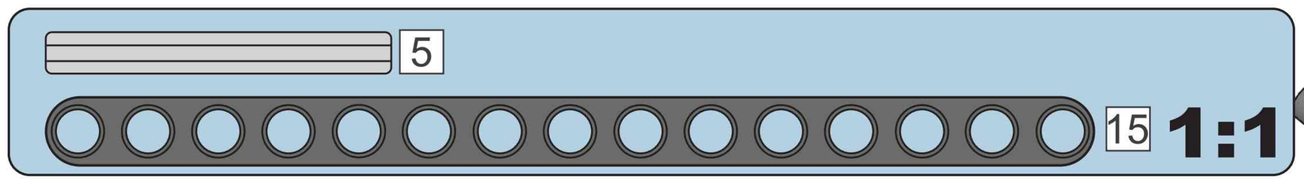

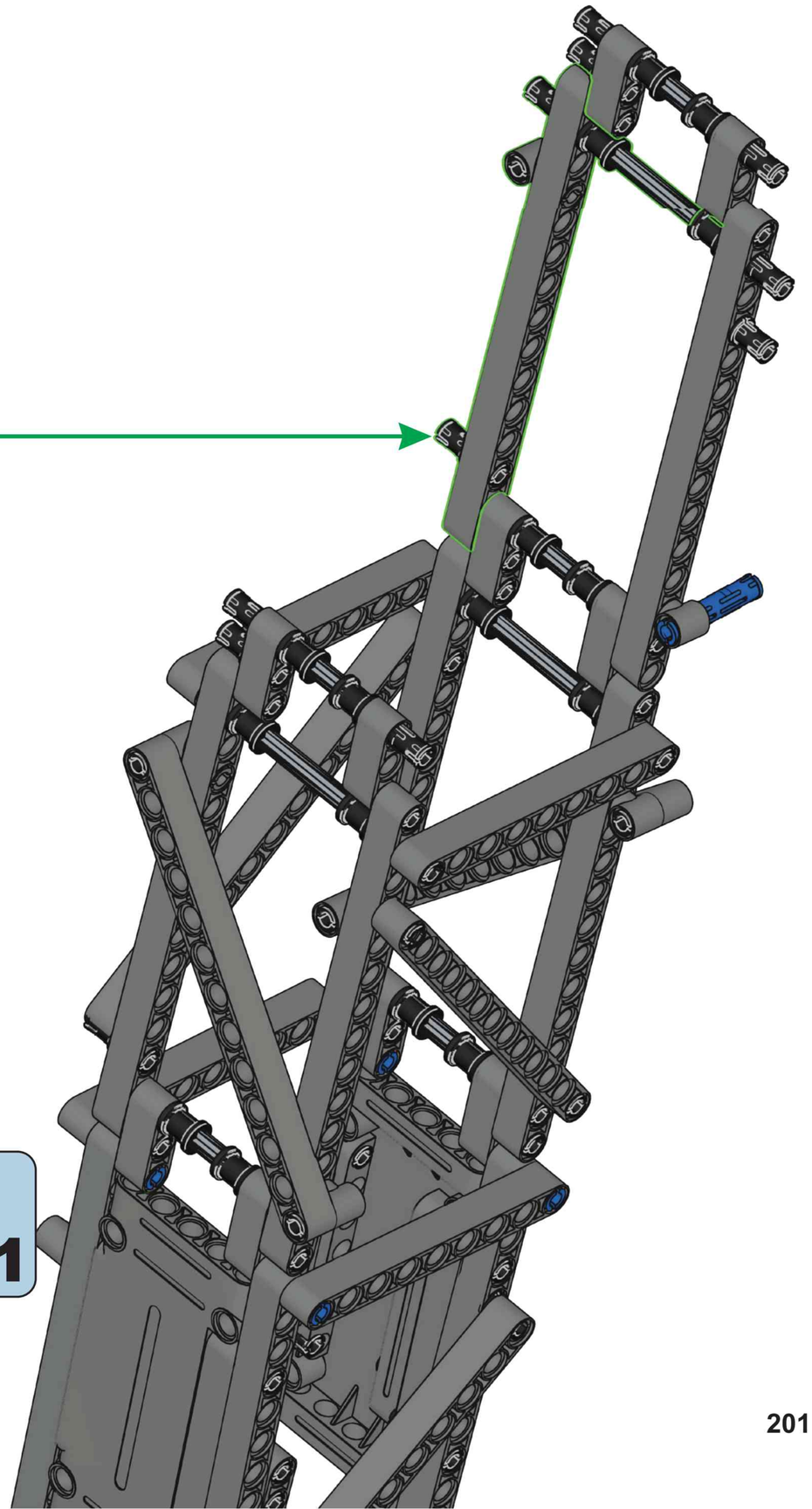

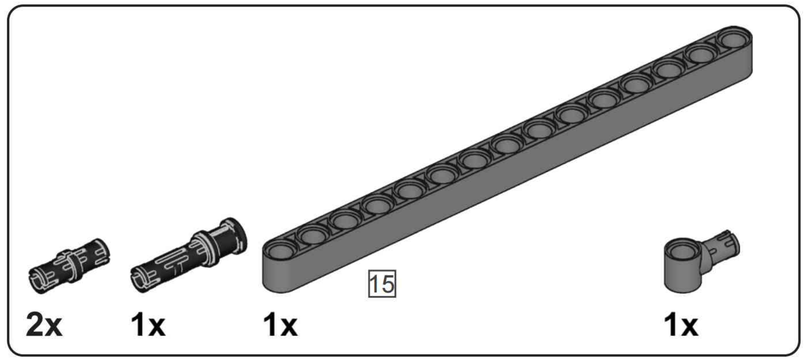

H42

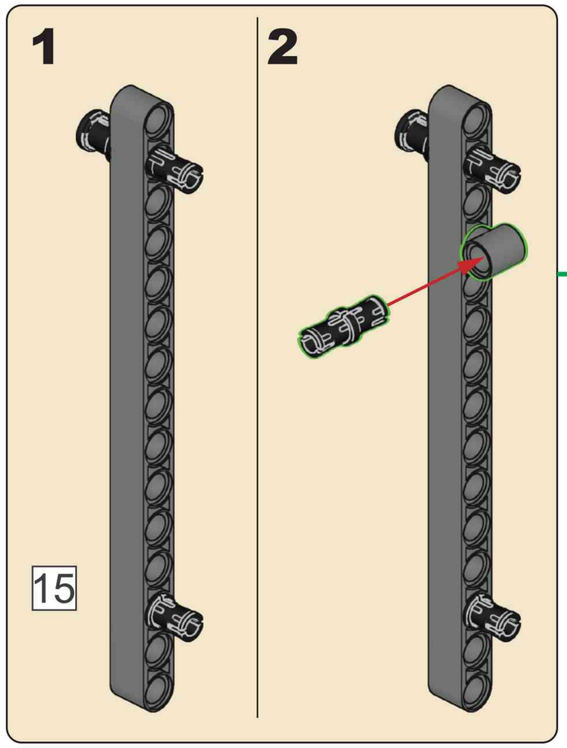



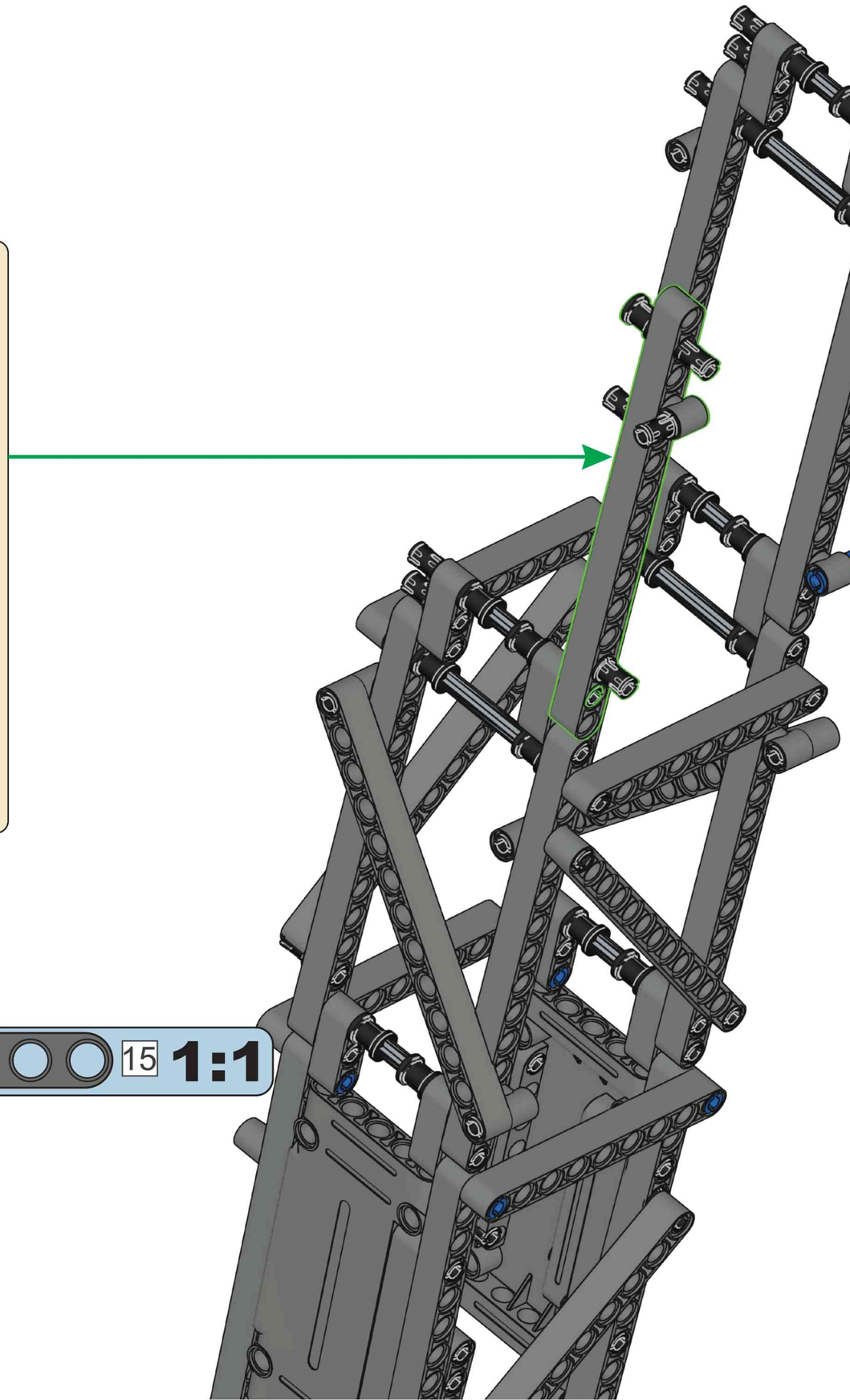

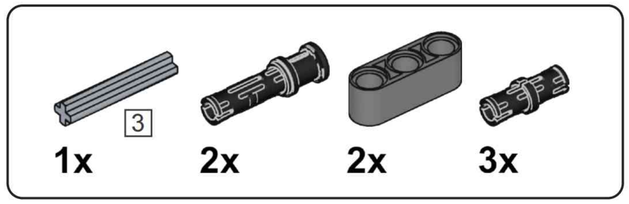

H43

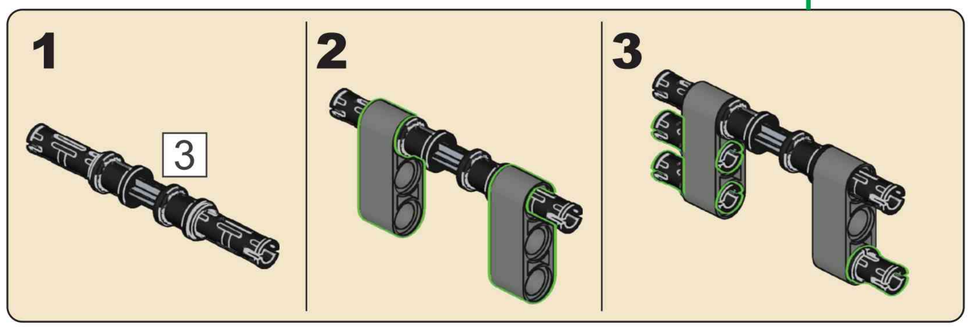

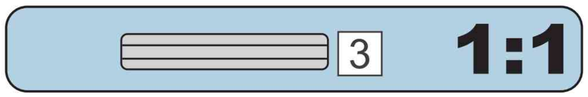

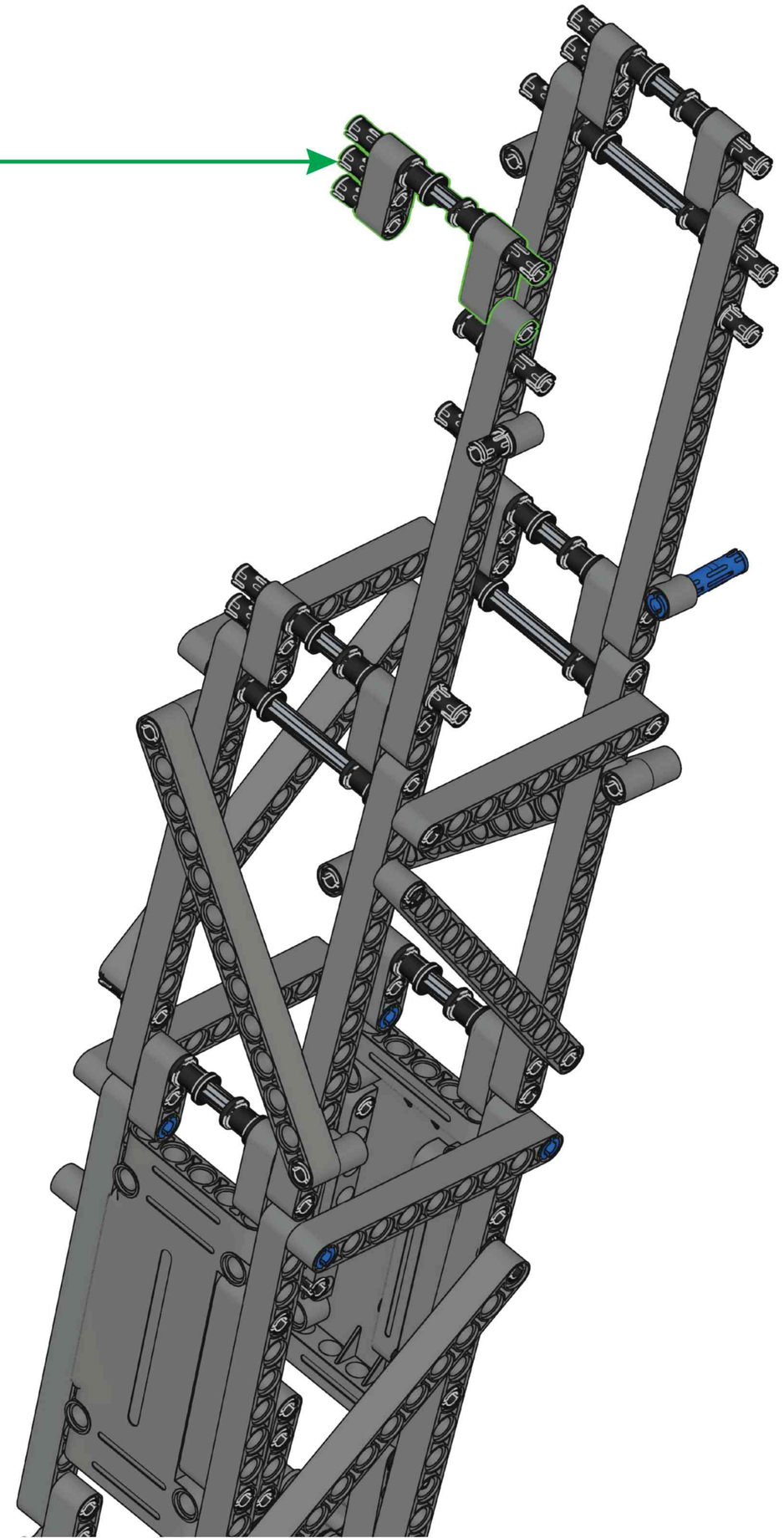

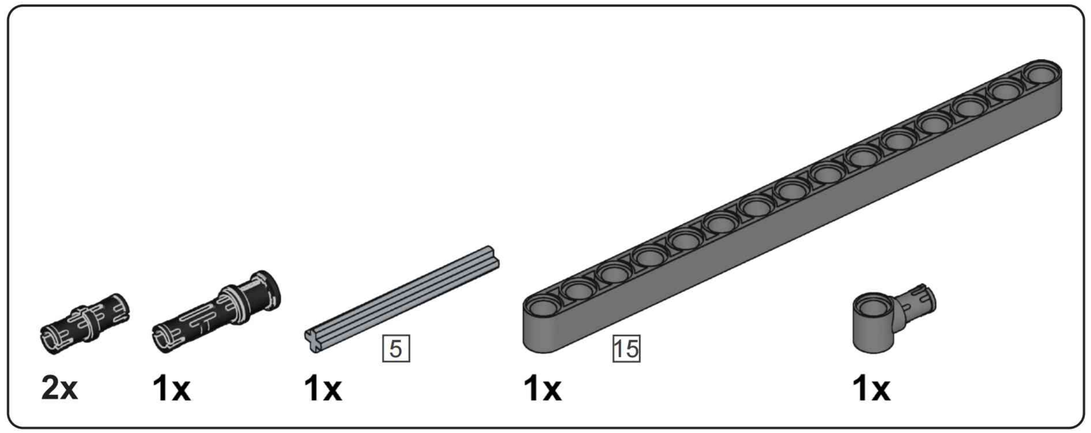

H44

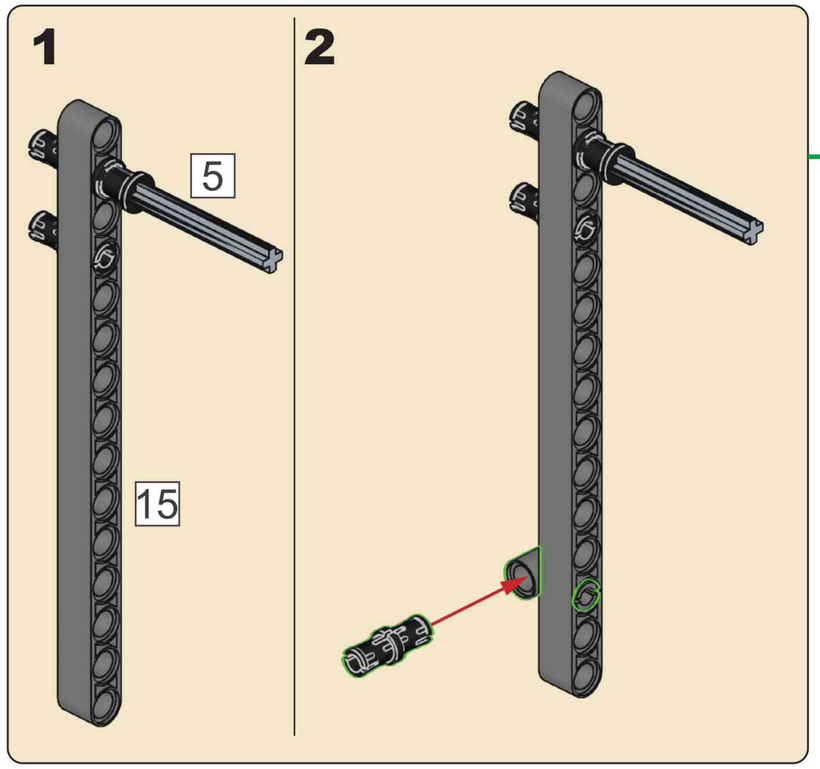

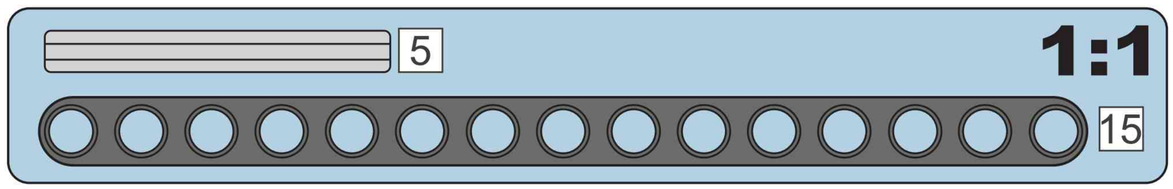

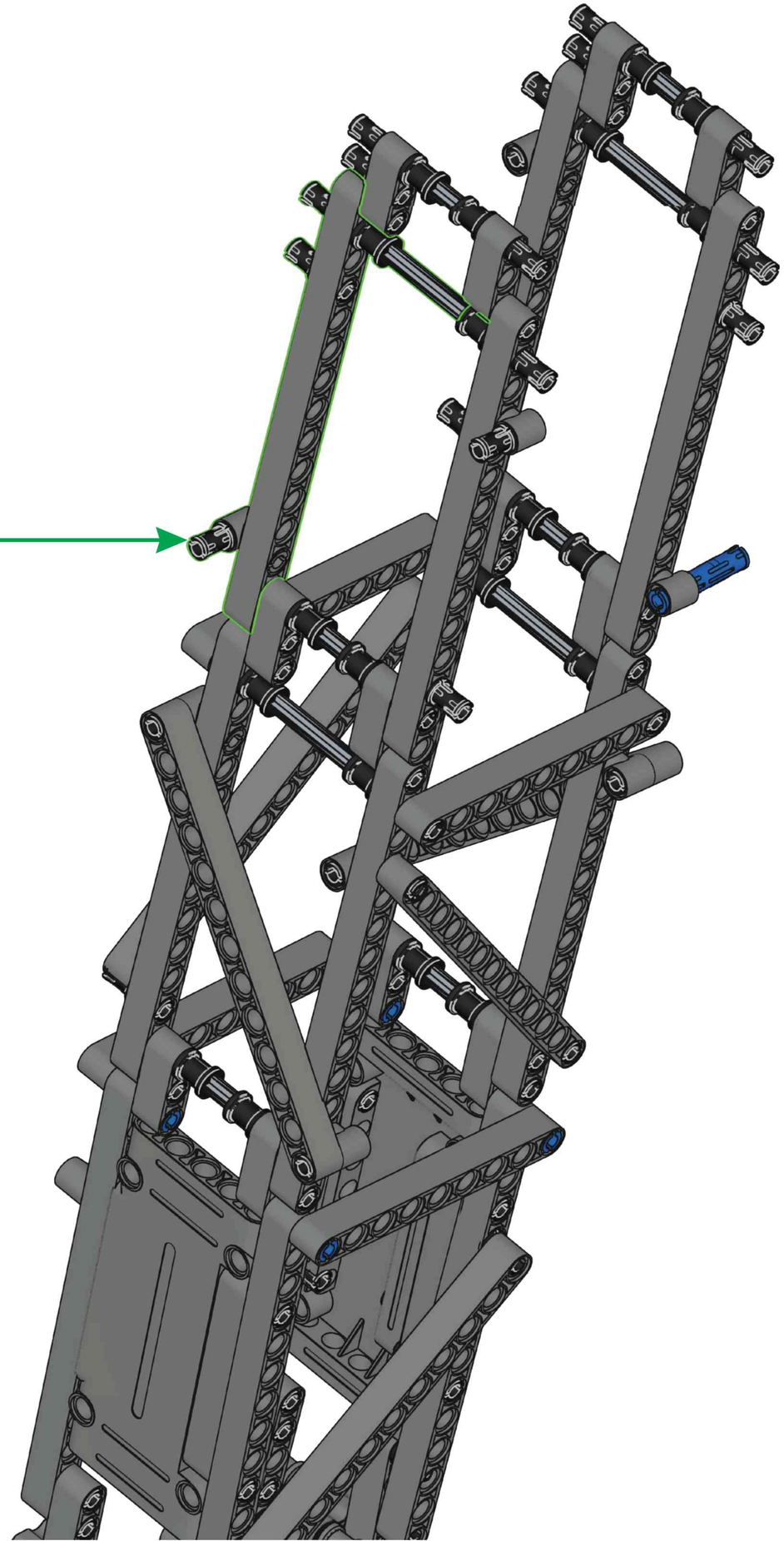

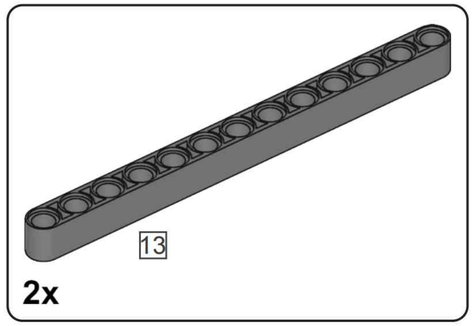

2x

H45

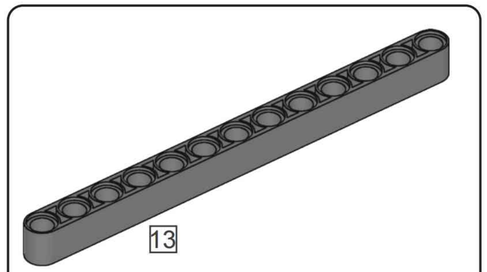

2x

H46

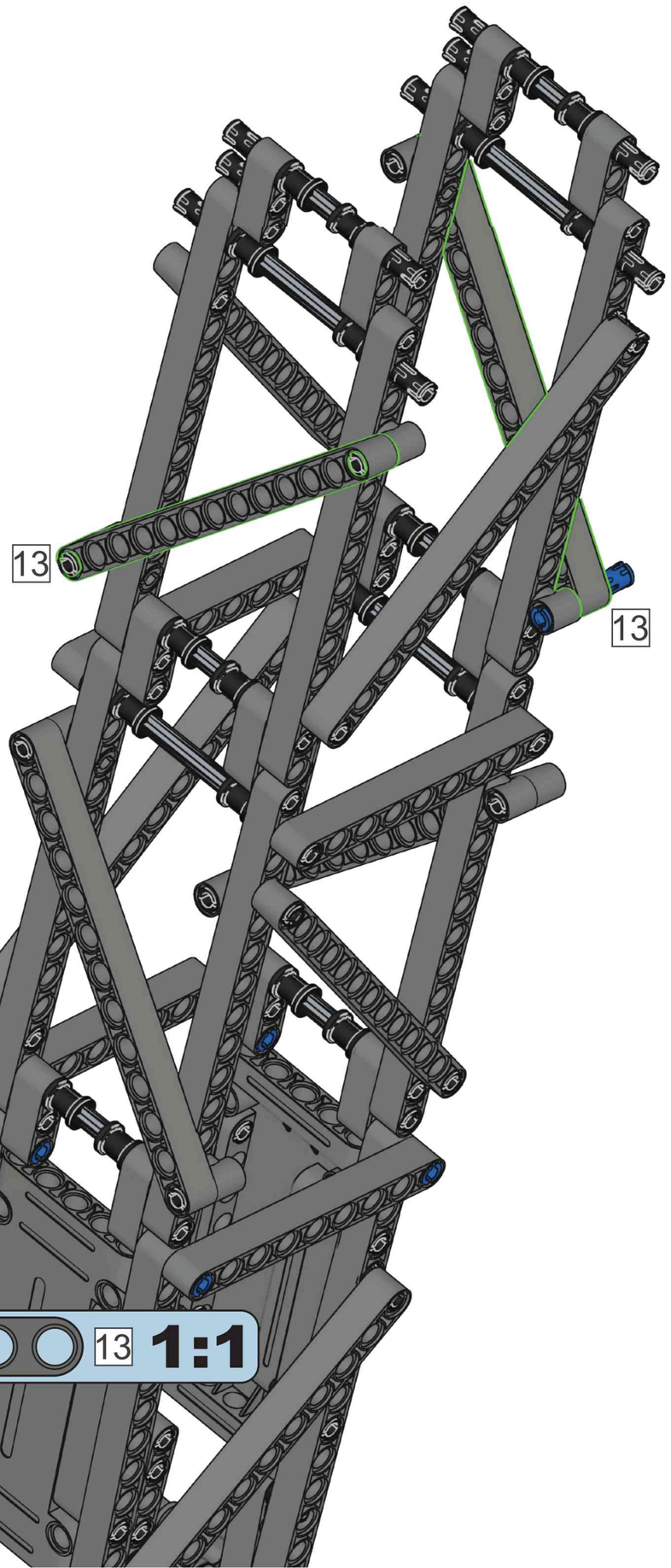

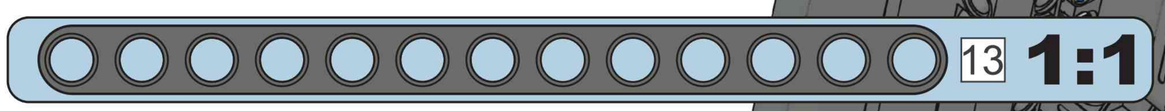

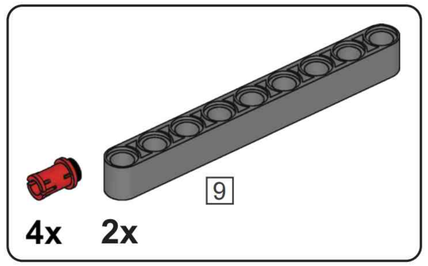

H47

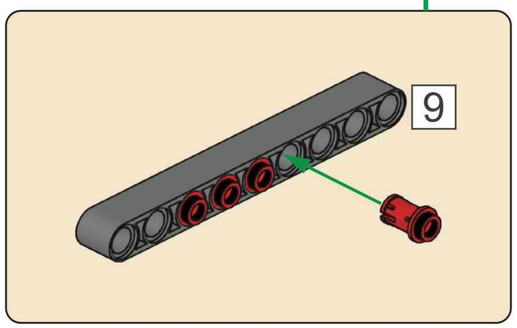

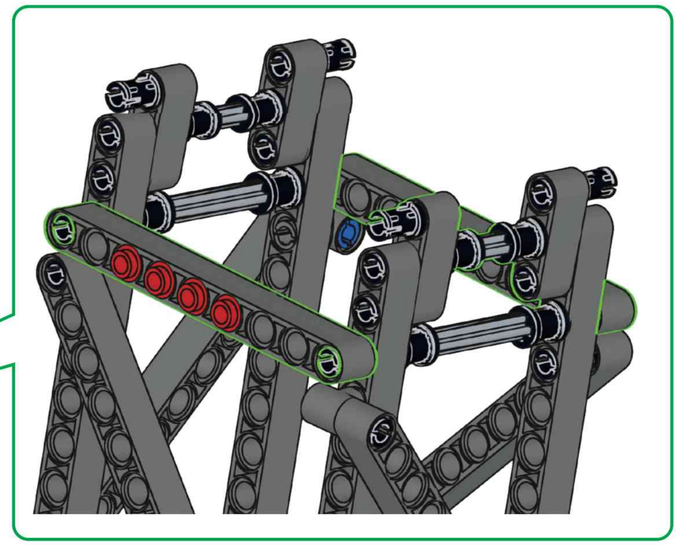

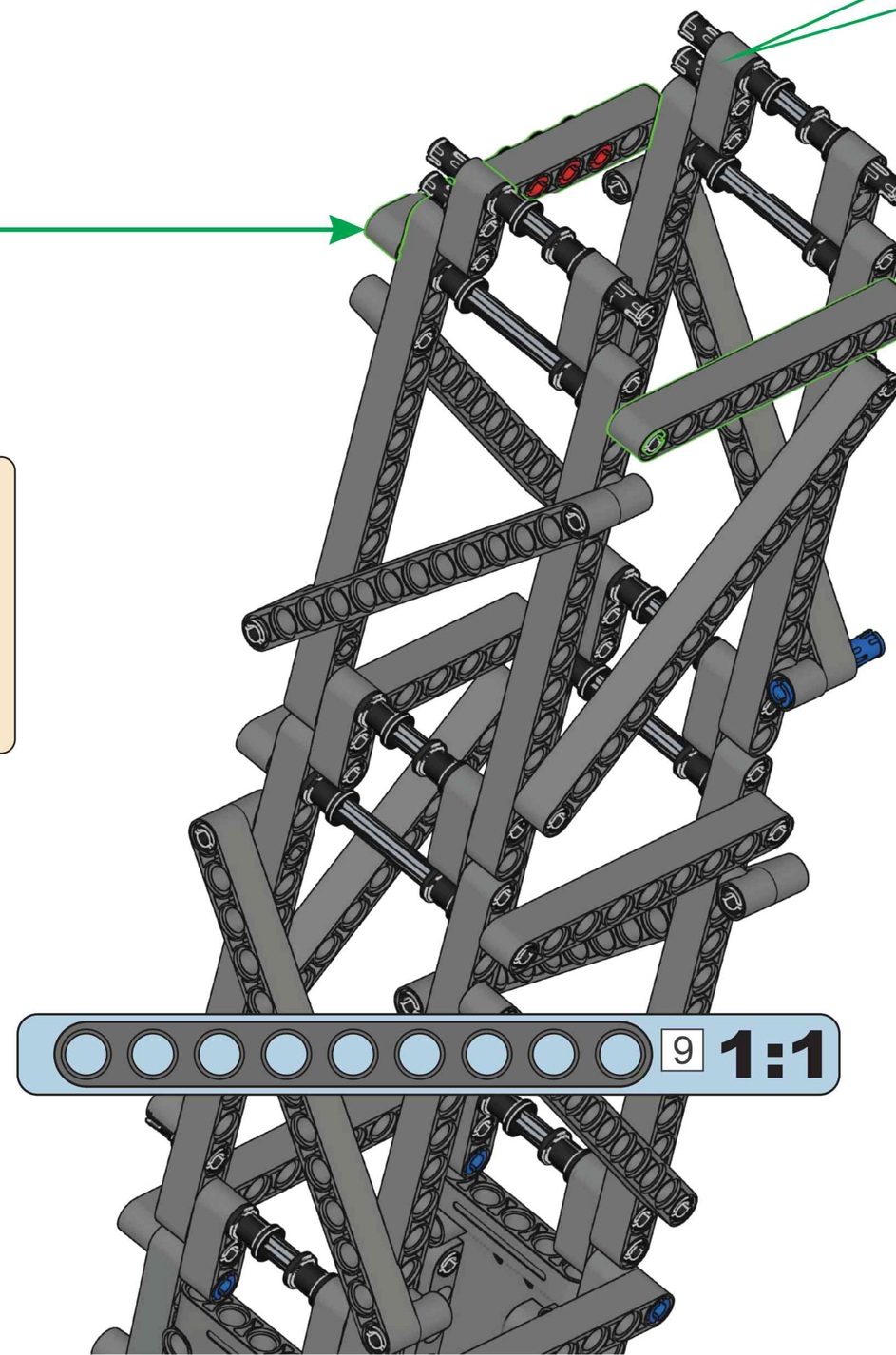

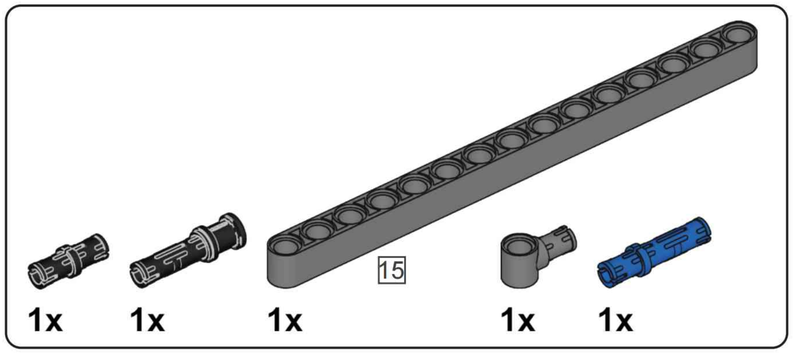

H48

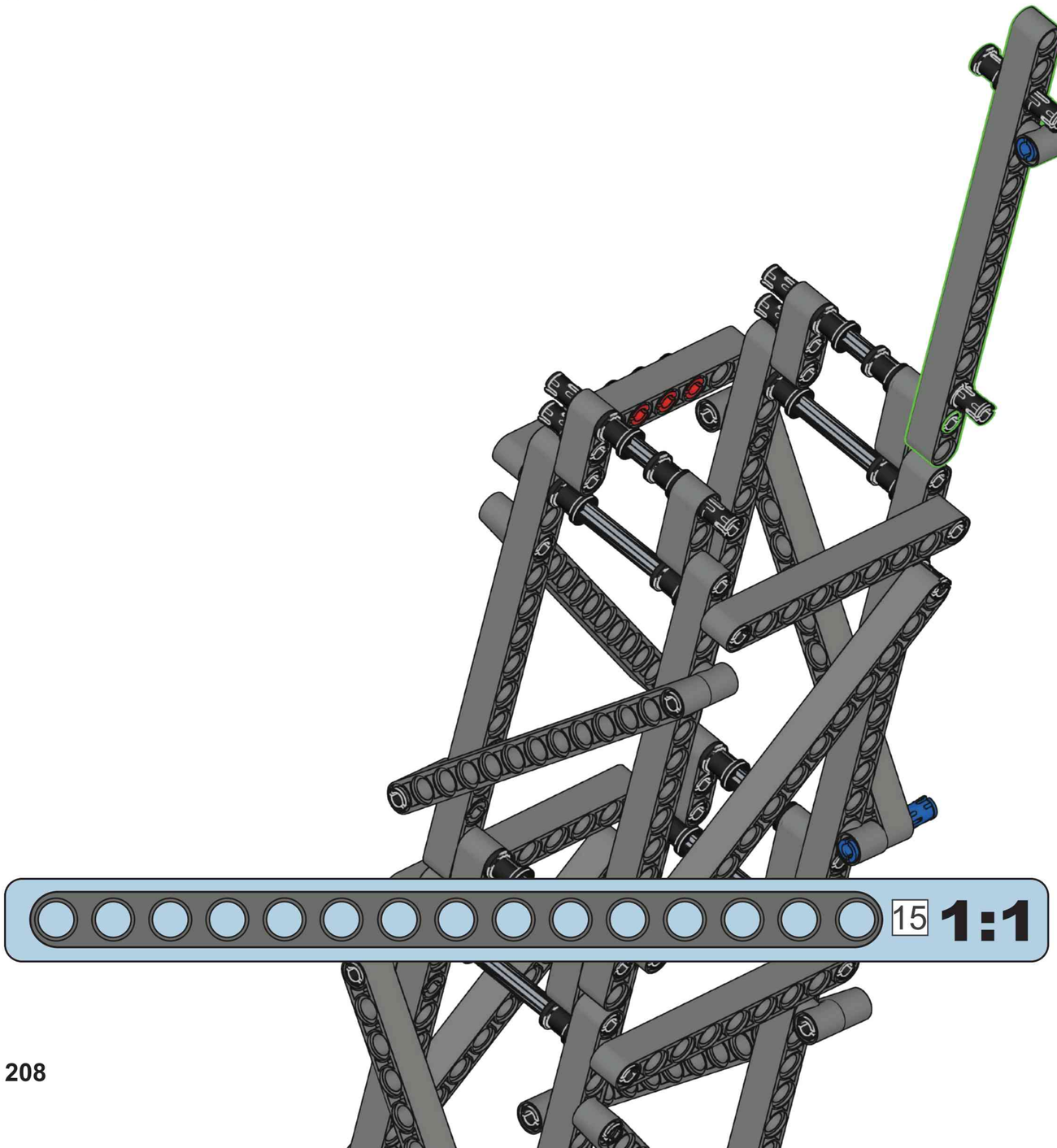

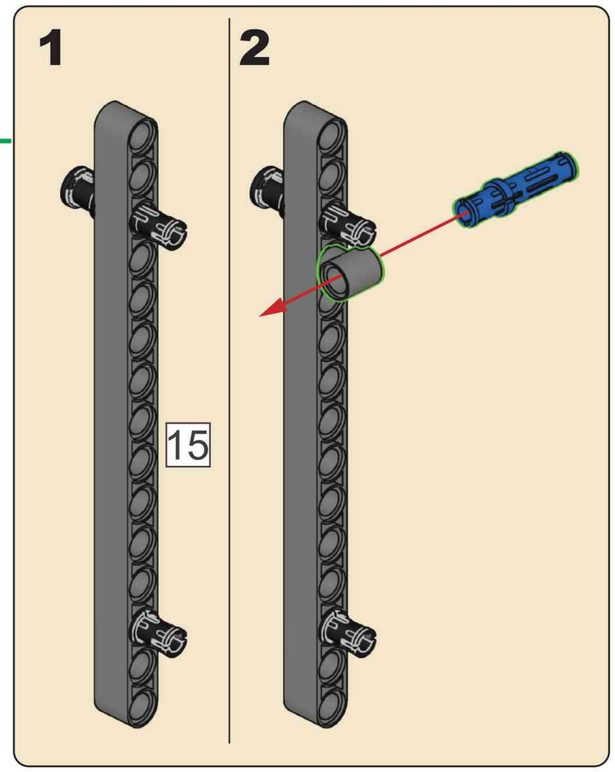

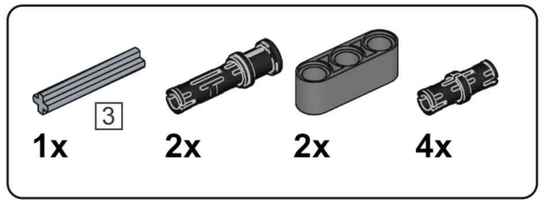

H49

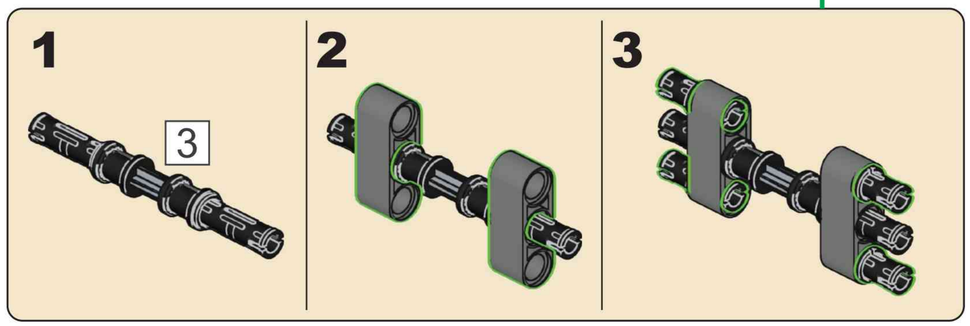

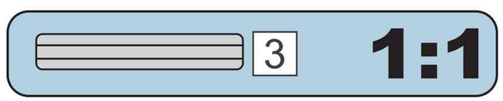

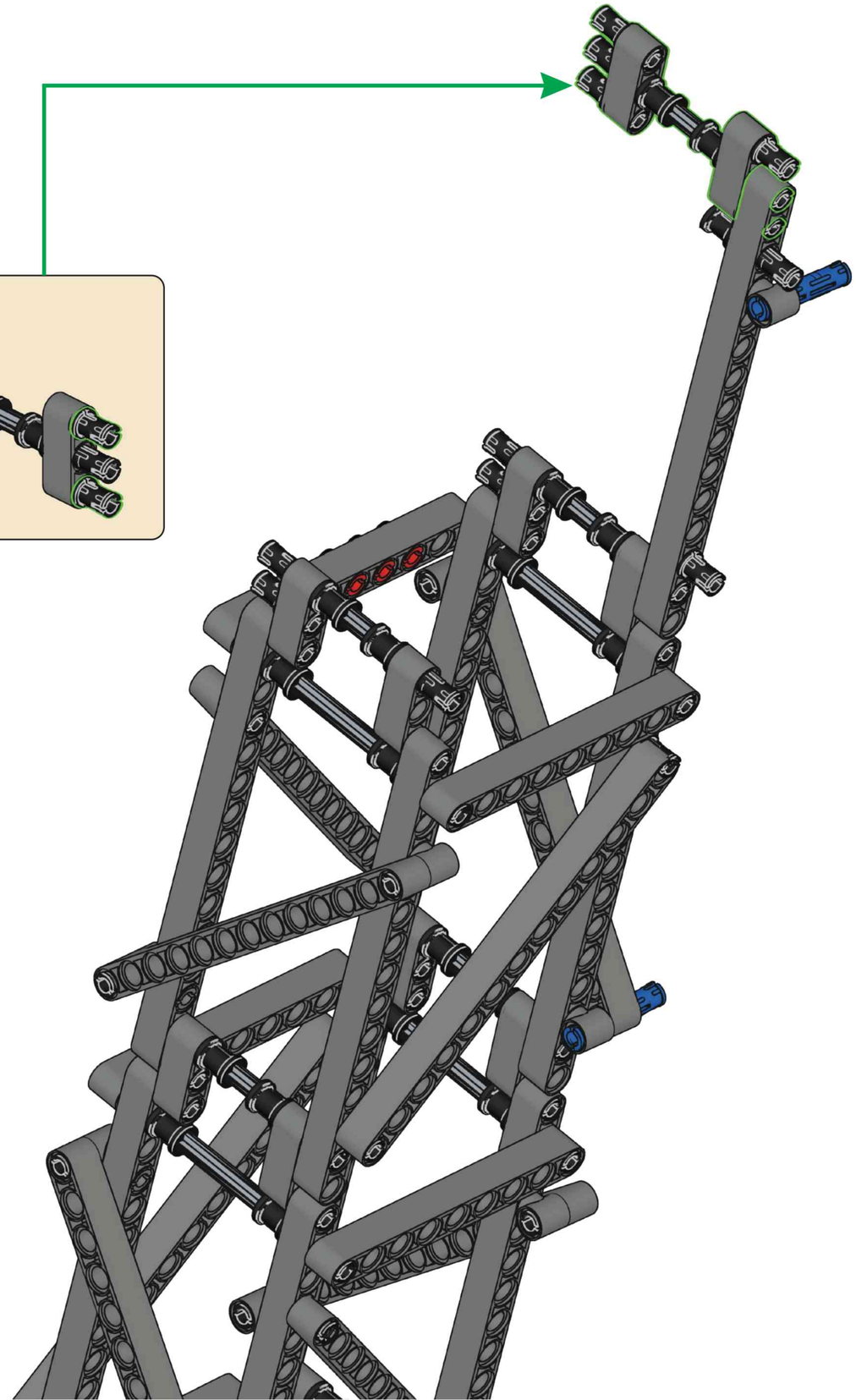

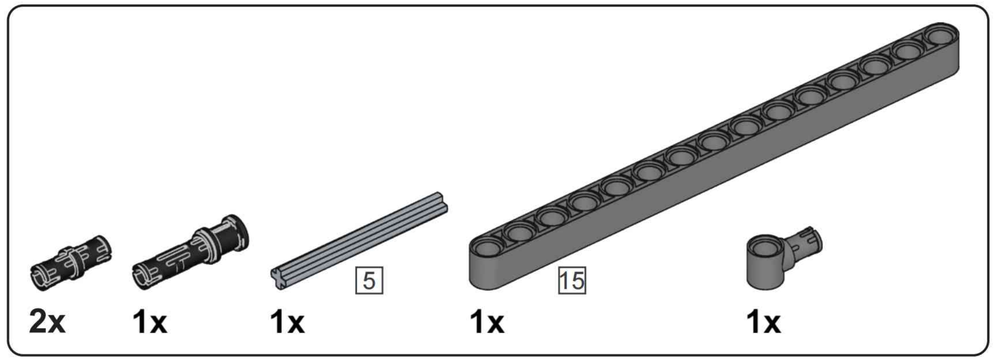

H50

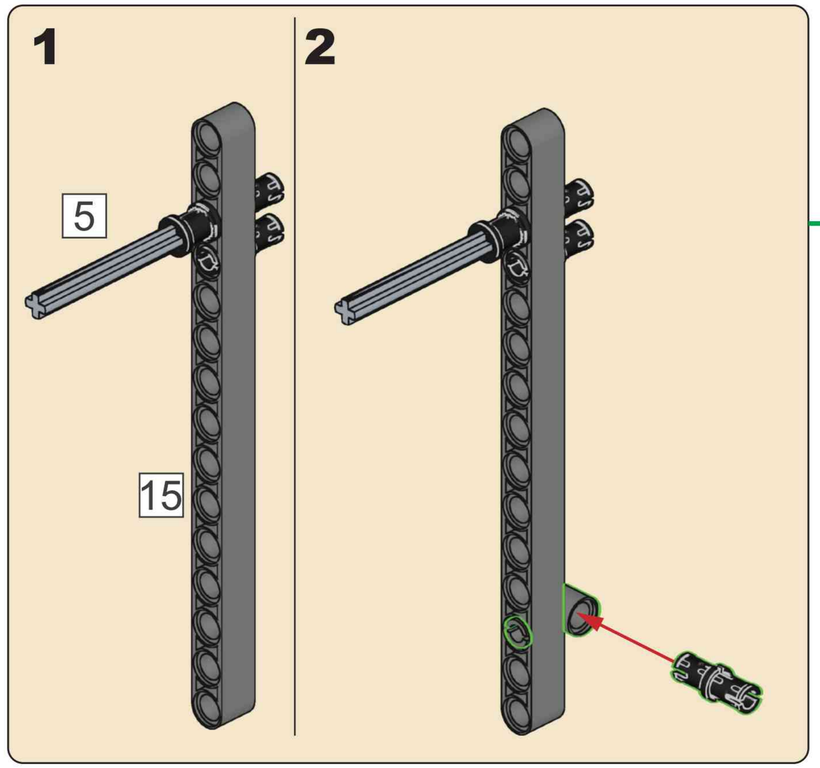

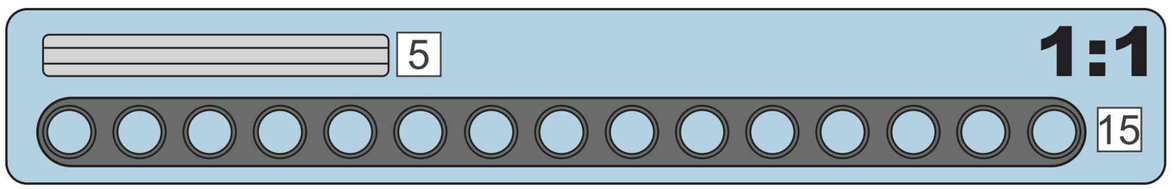

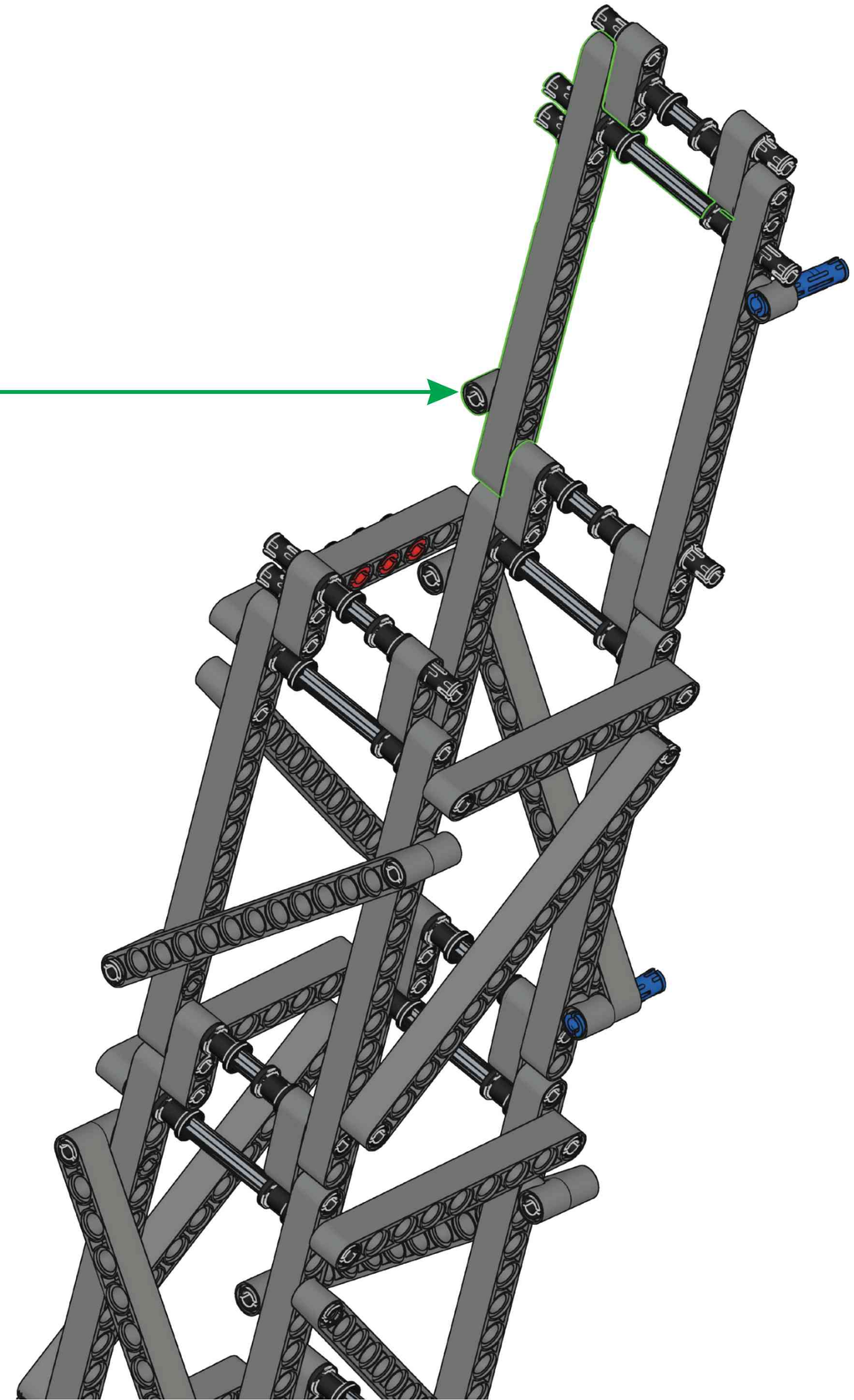

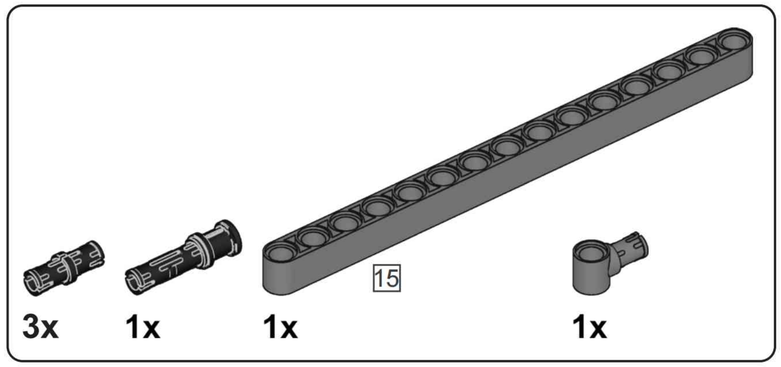

H51

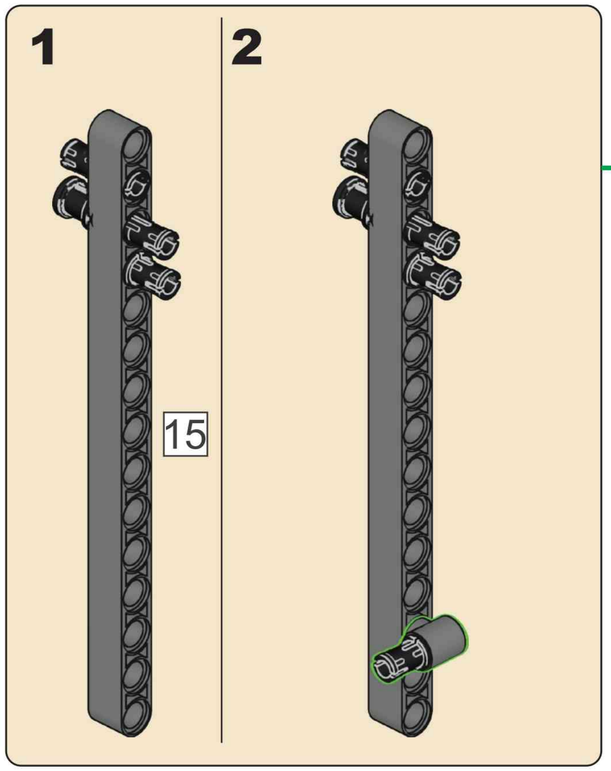



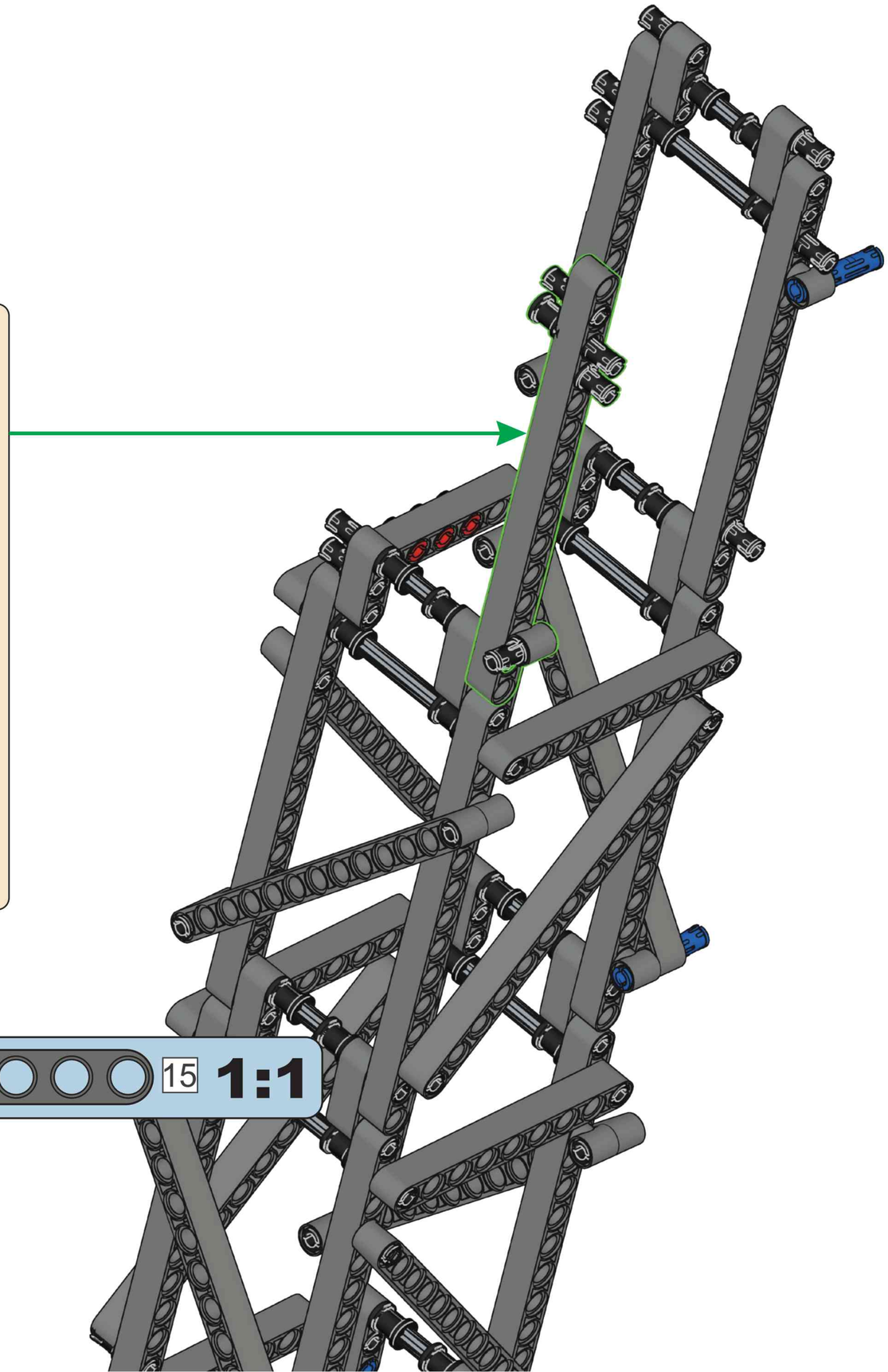

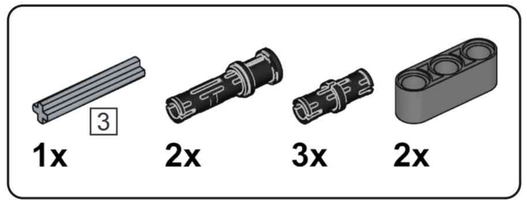

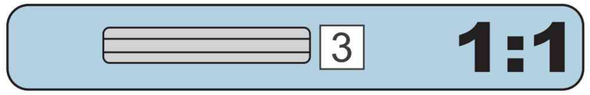

H52

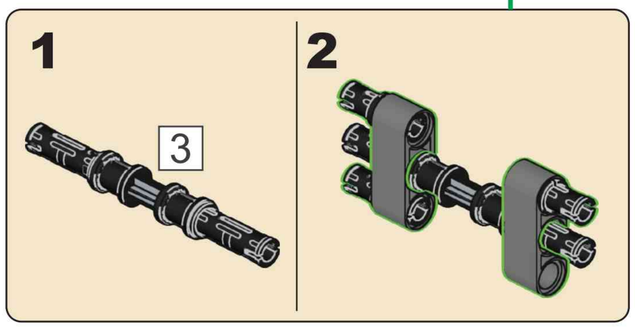

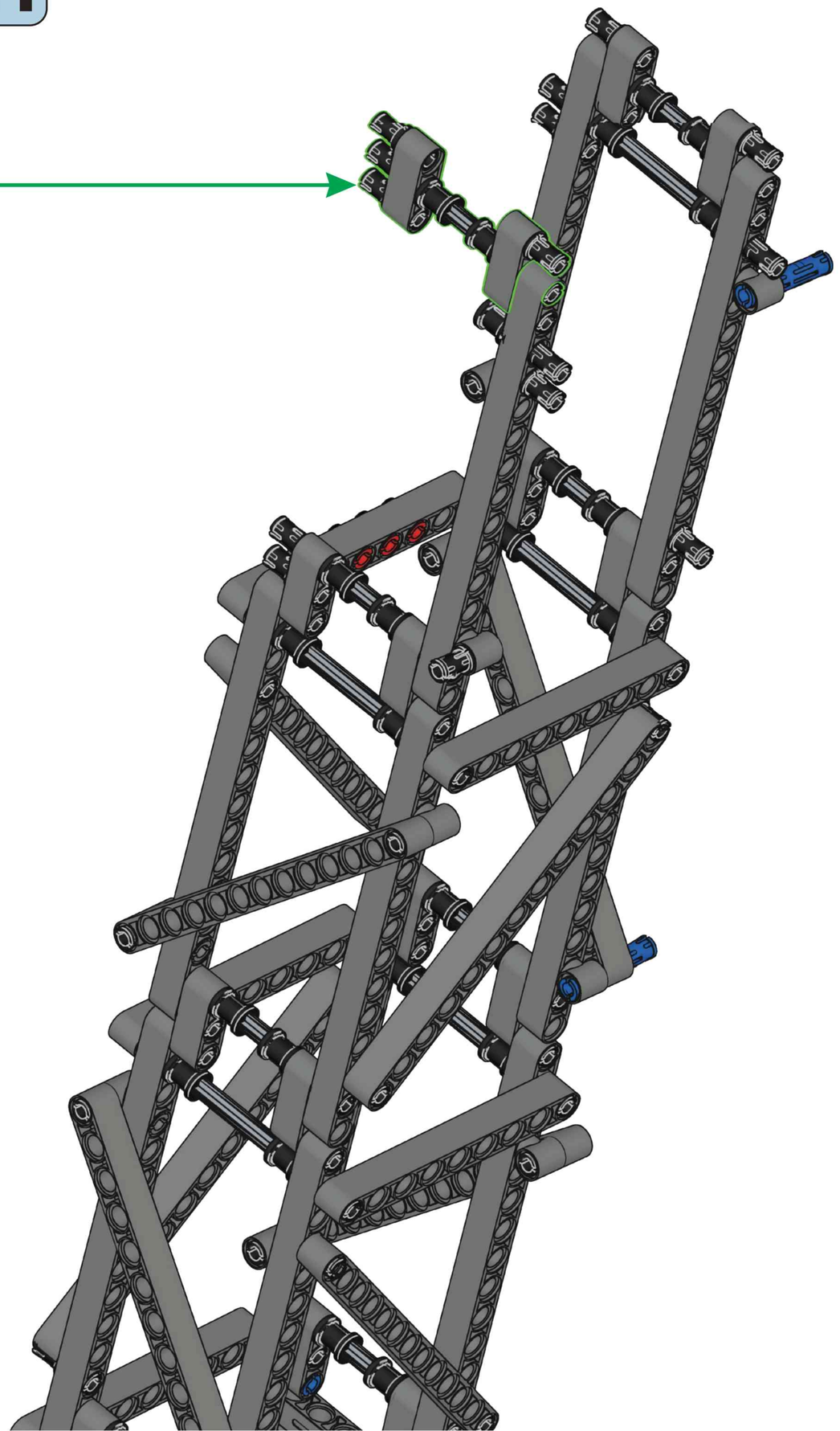

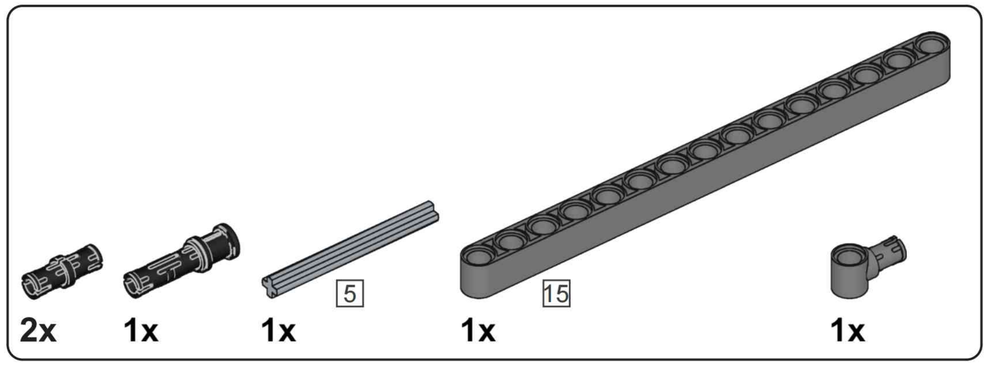

H53

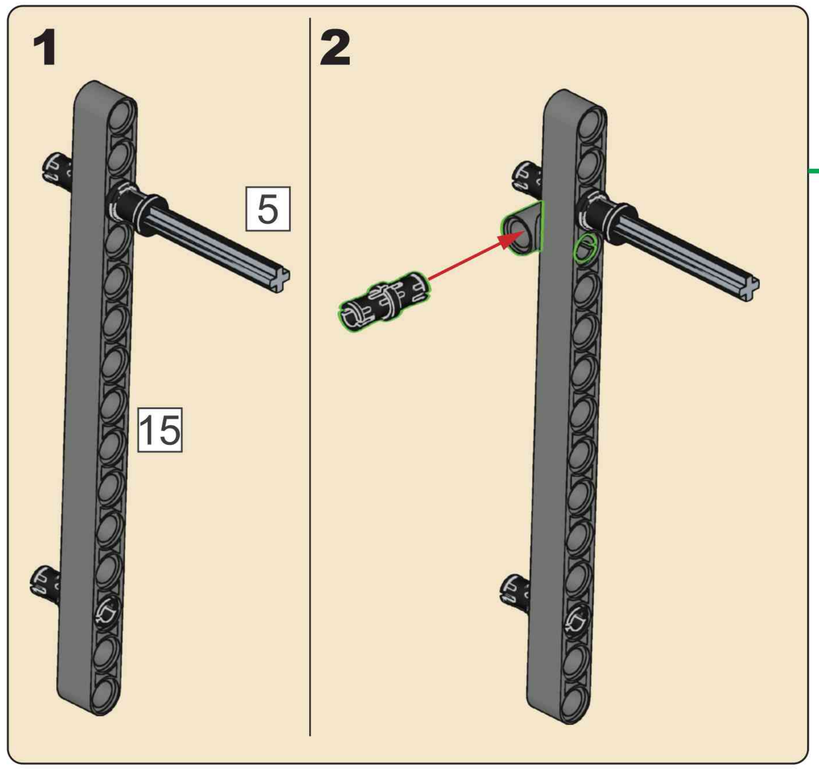

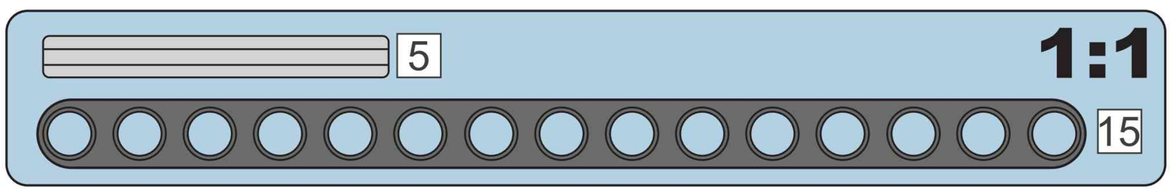

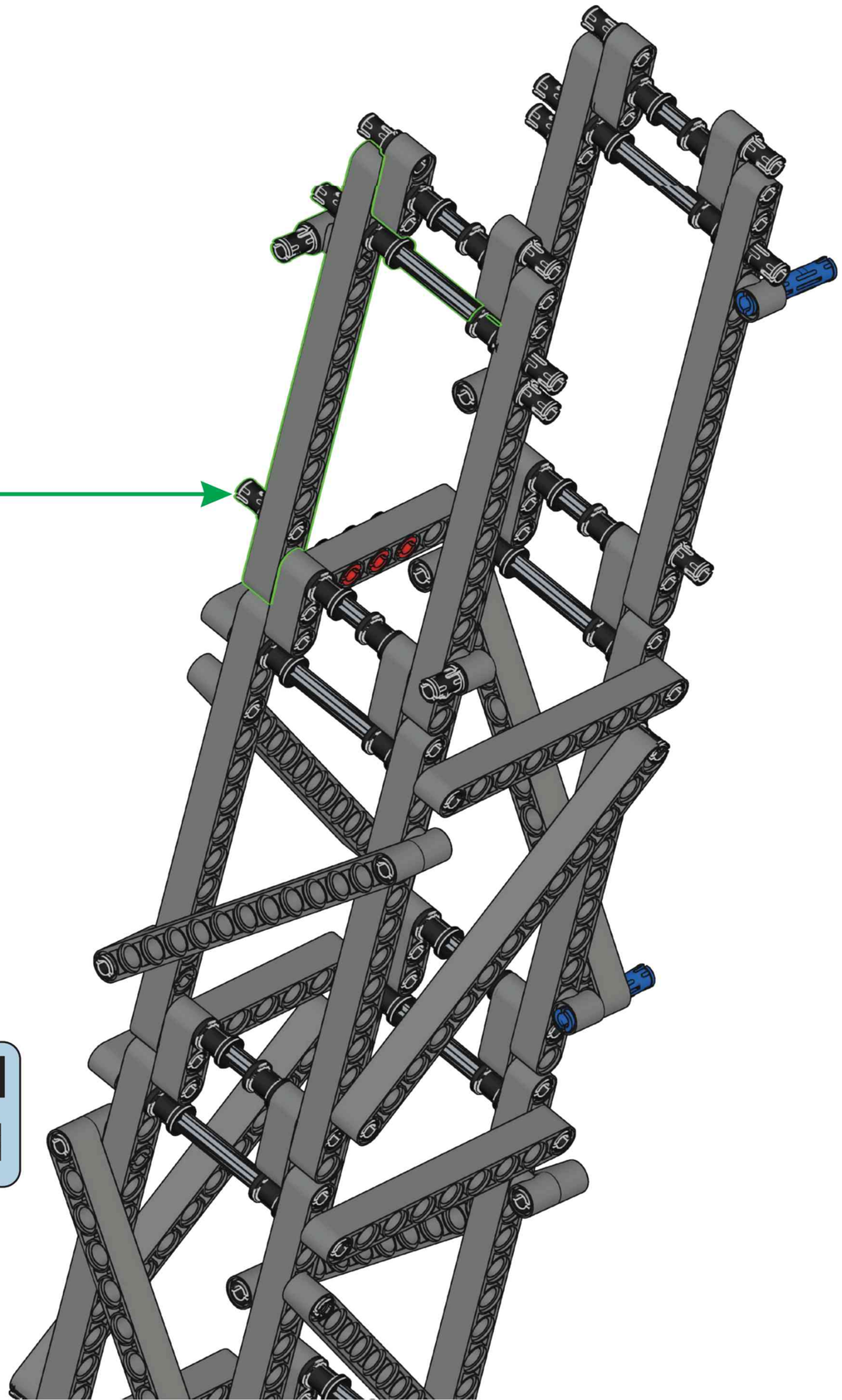

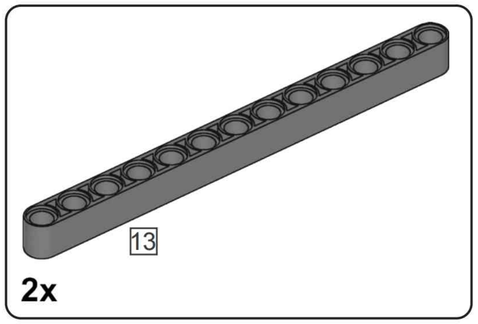

2x

H54

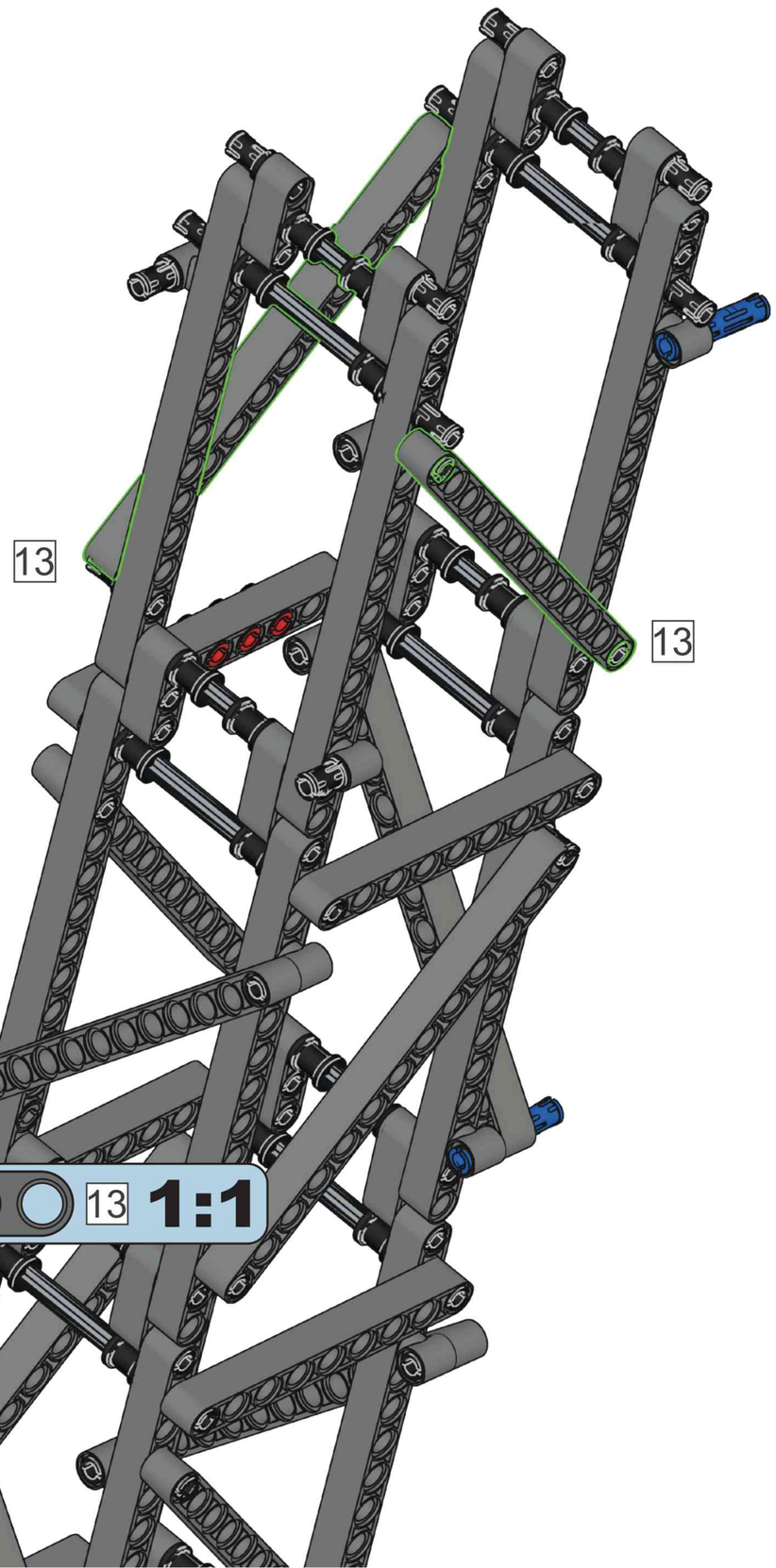

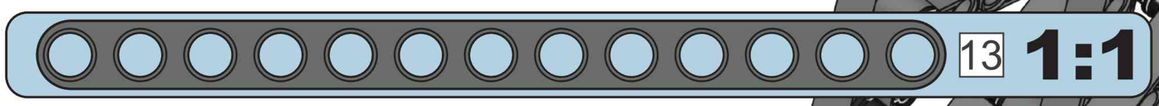

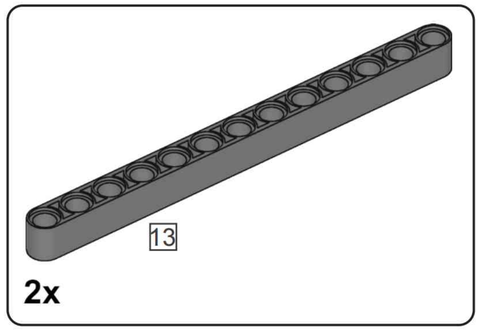

2x

H55

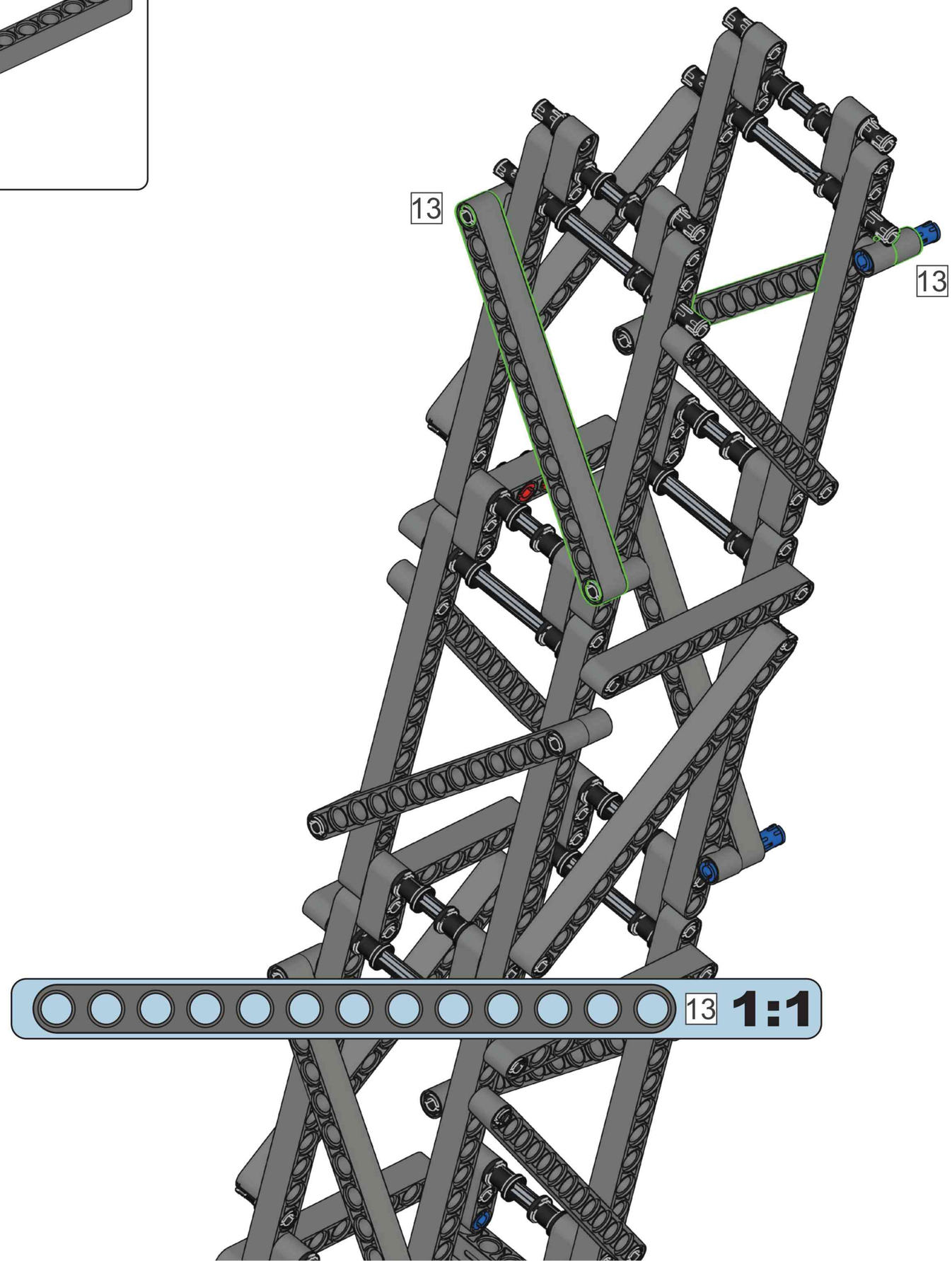

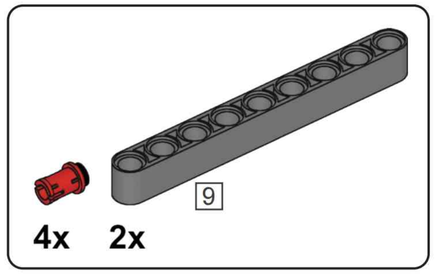

H56

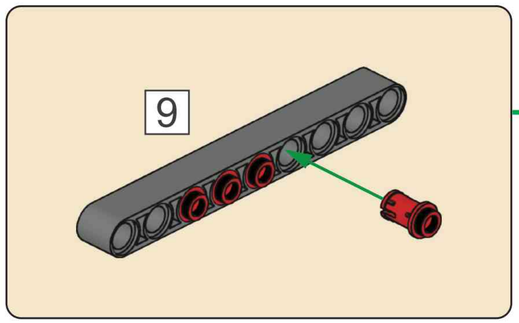

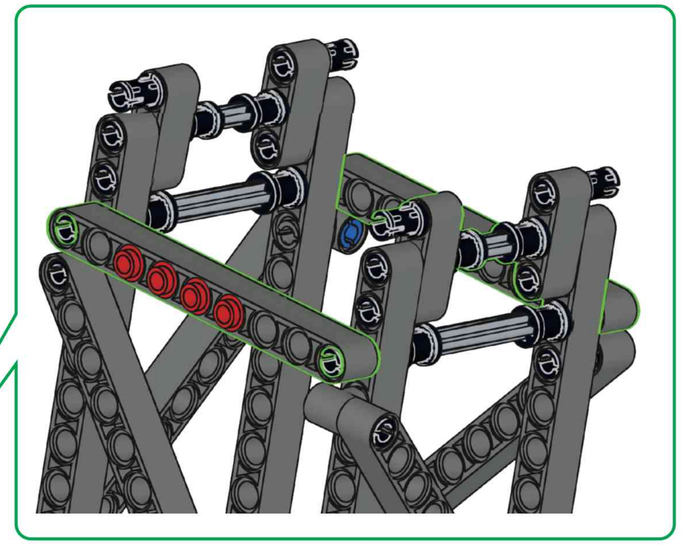

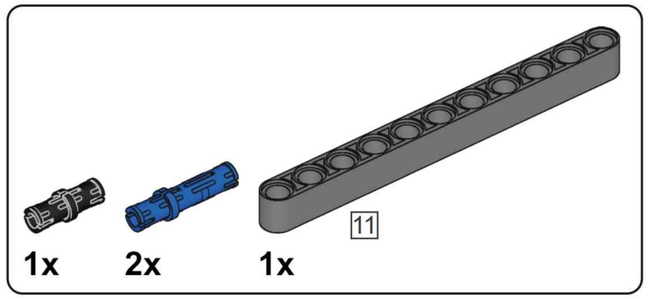

H57

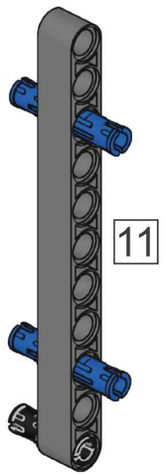

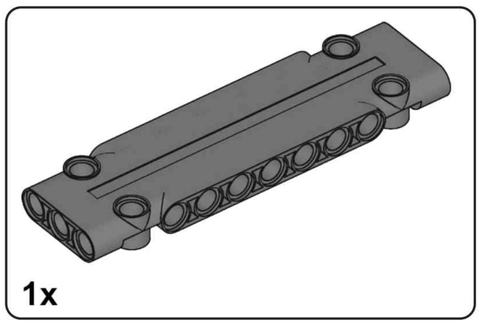

H58

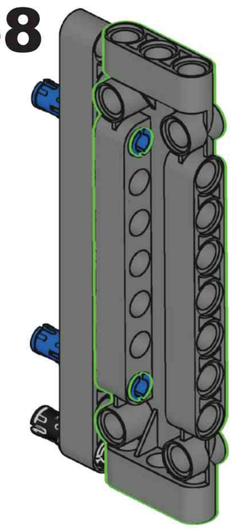

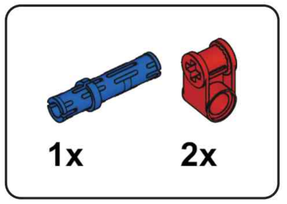

H59

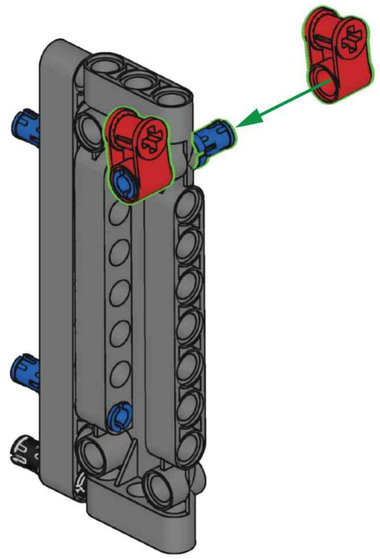

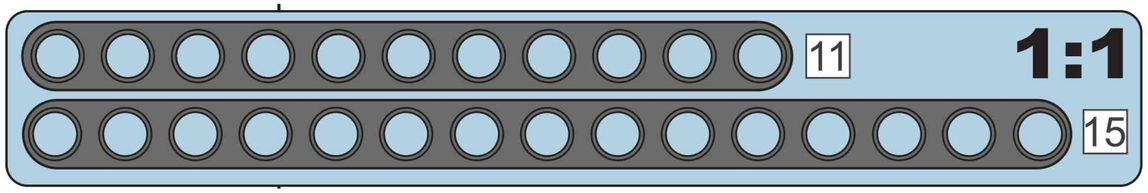

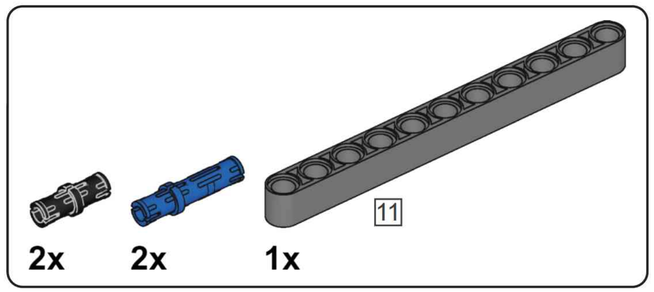

H60

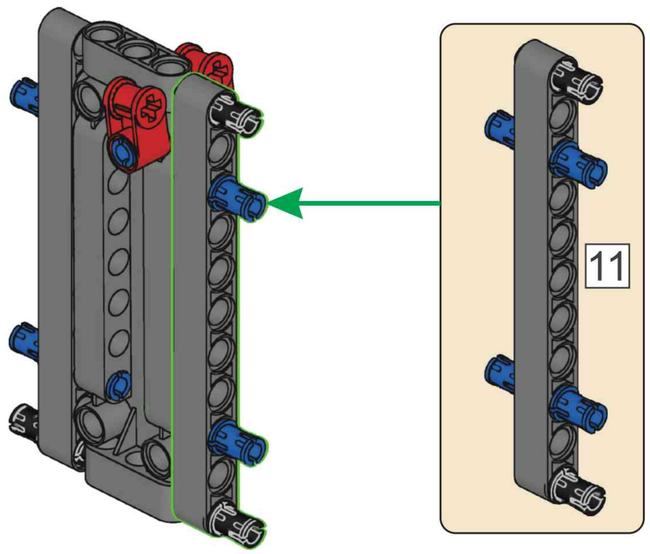

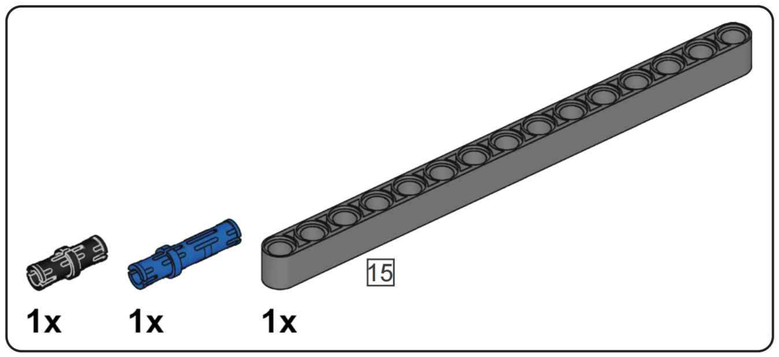

H61

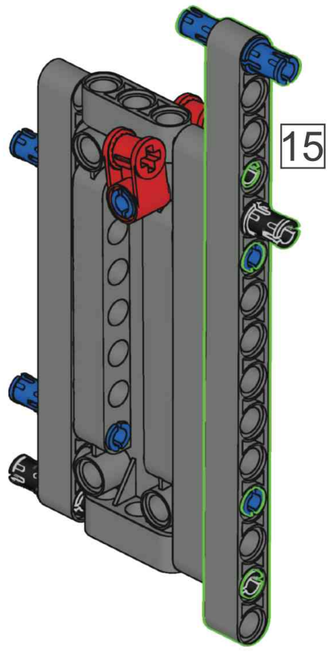

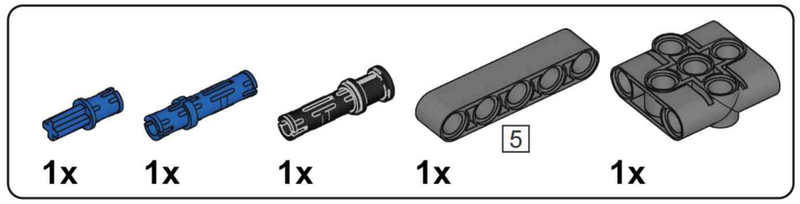

H62

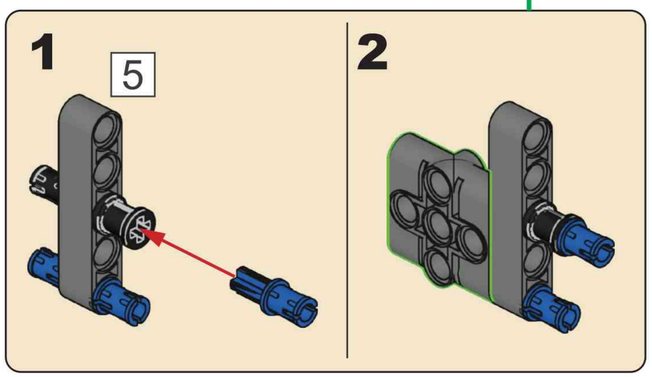

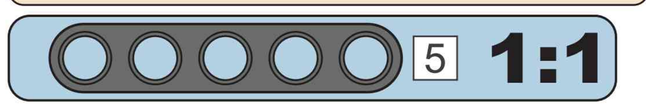

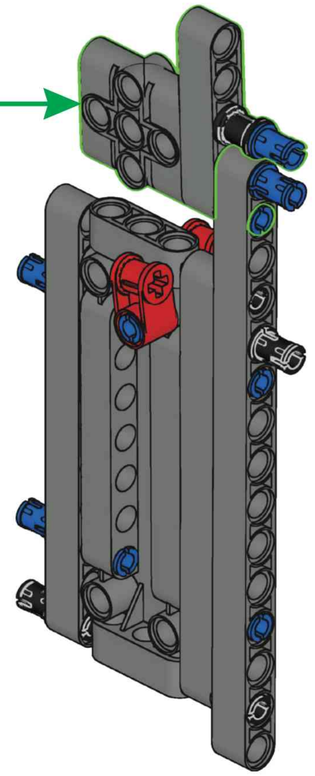

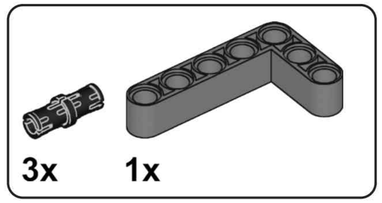

H63

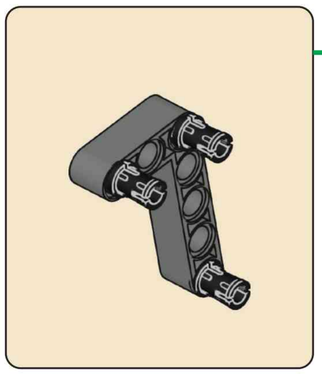

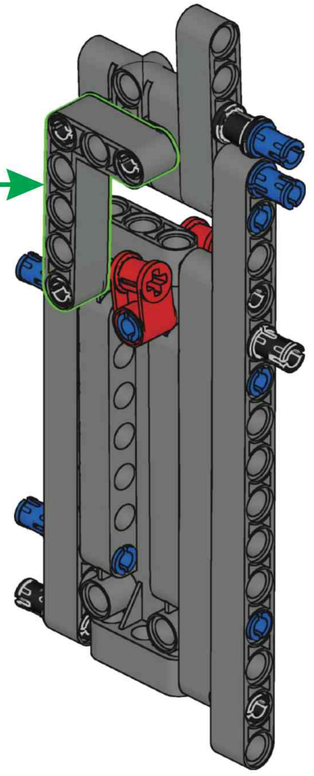

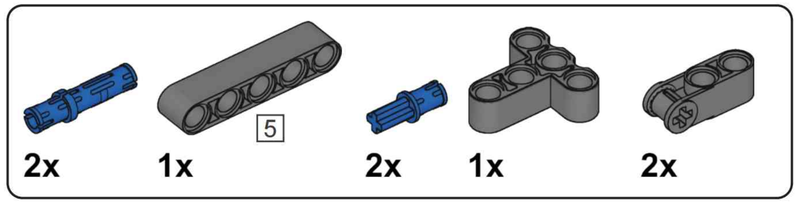

H64

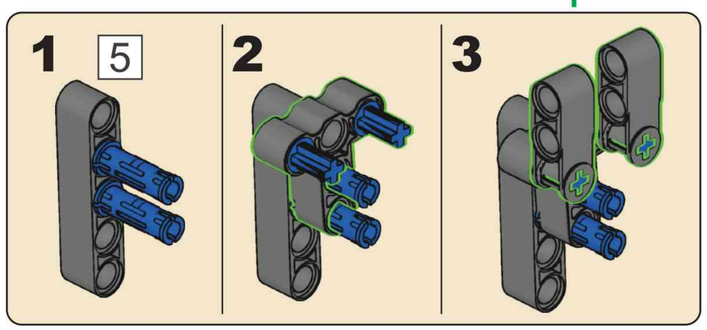

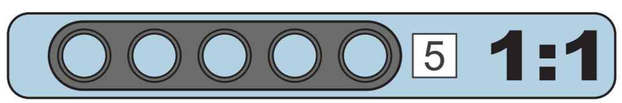

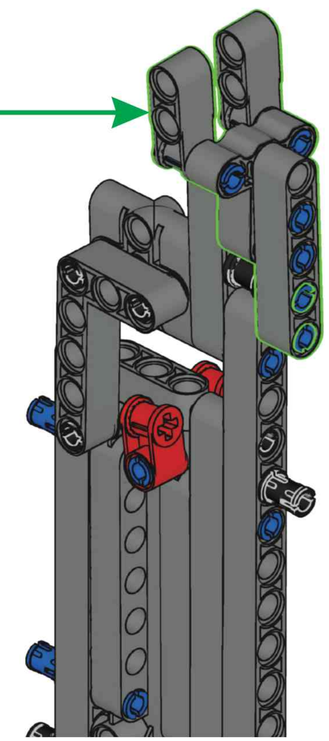

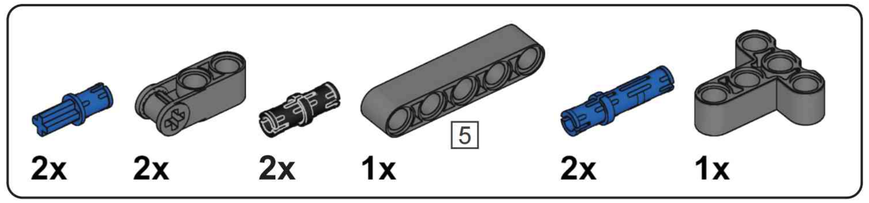

H65

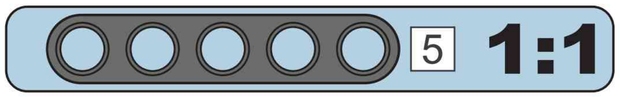

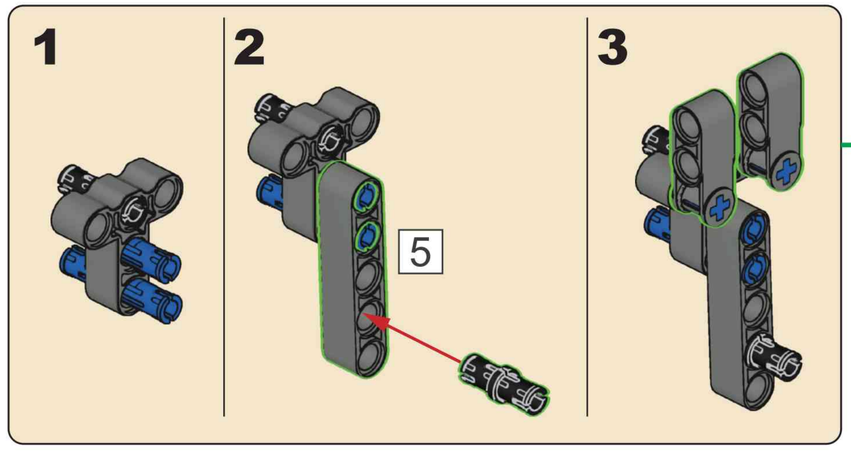

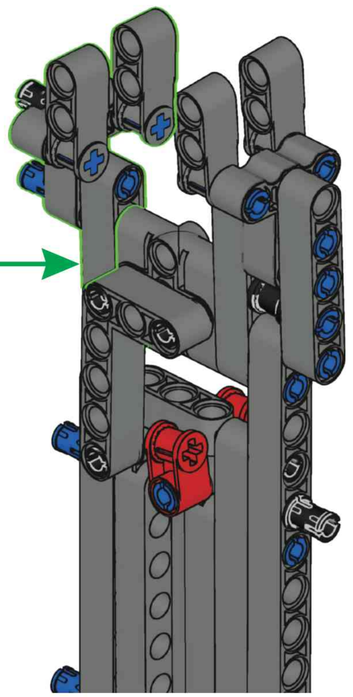

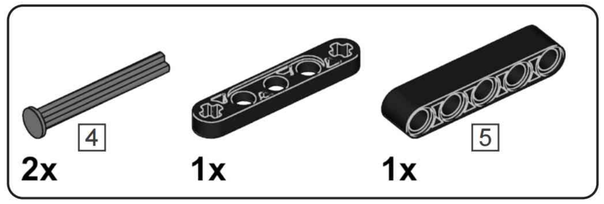

H66

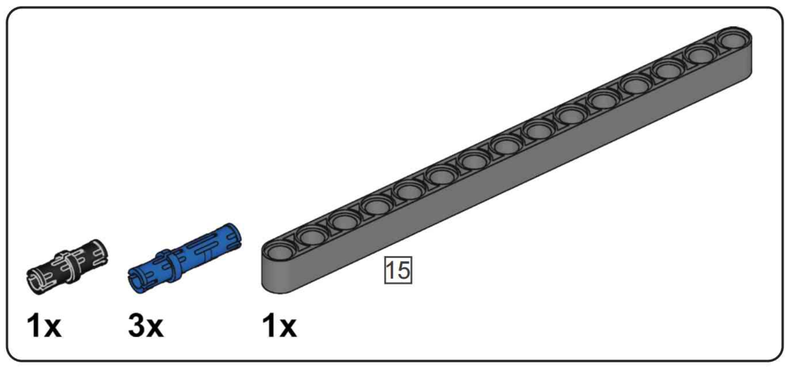

H67

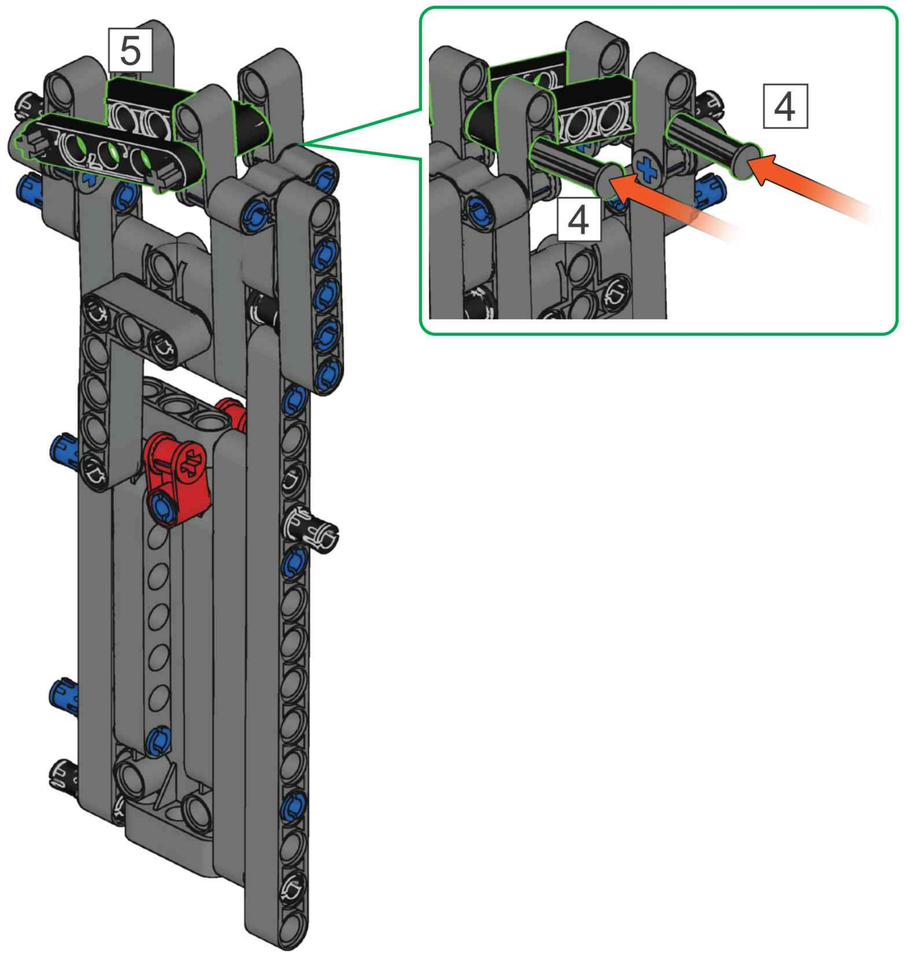

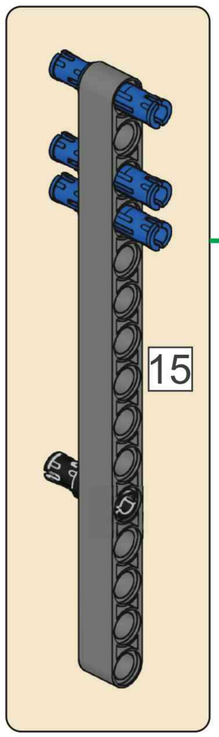

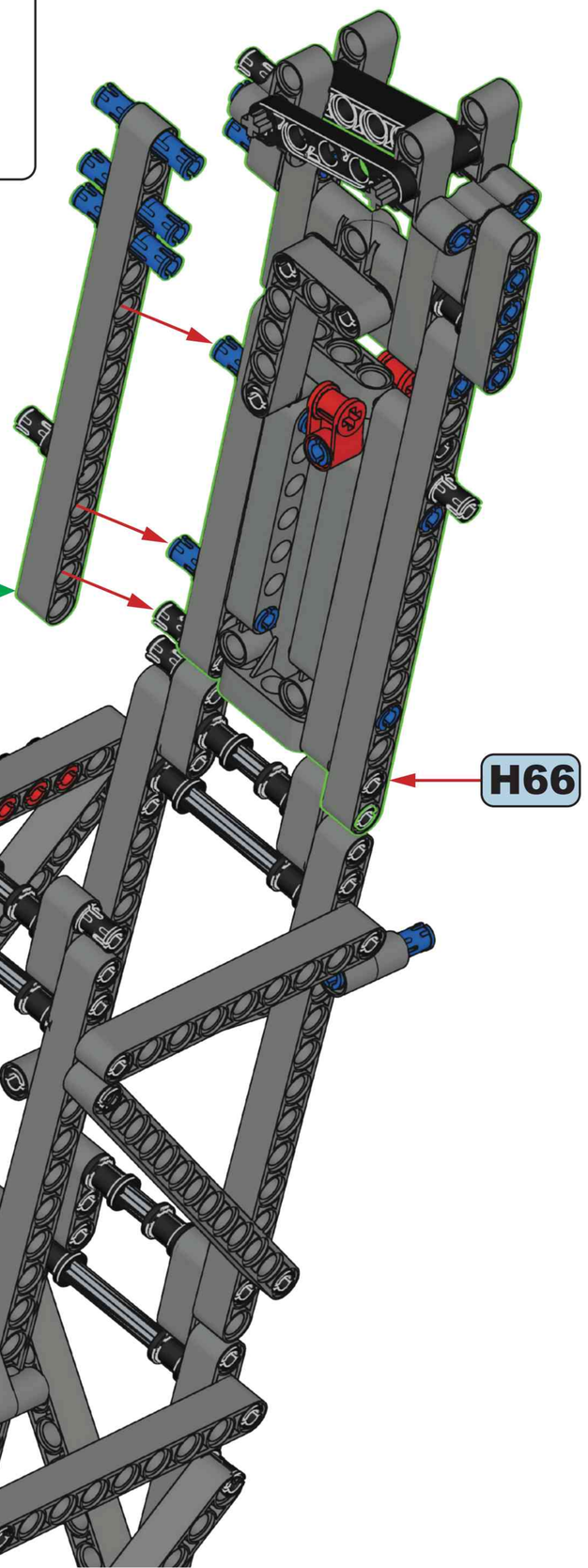

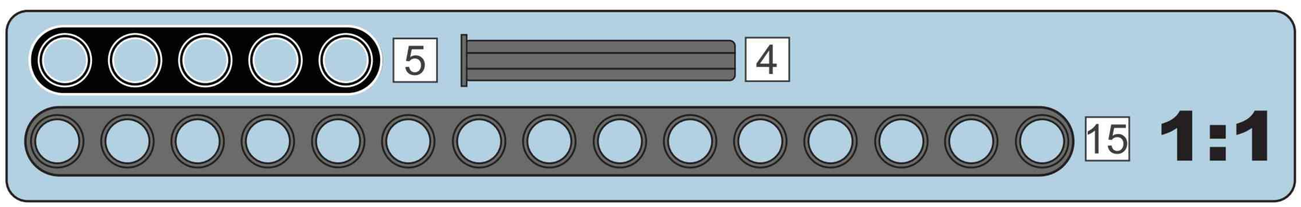

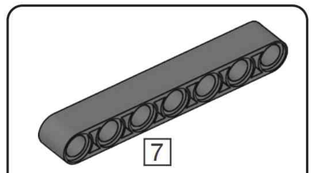

H68

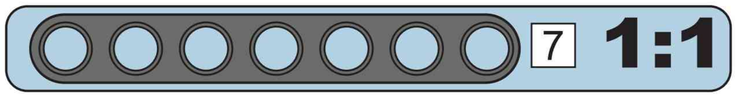

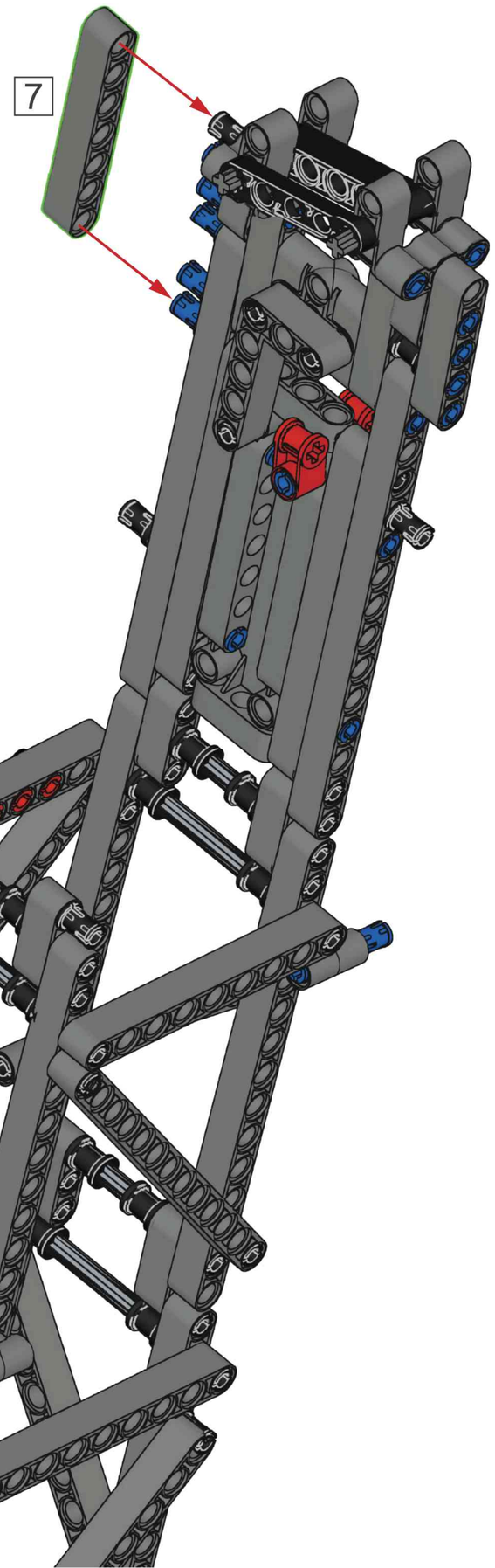

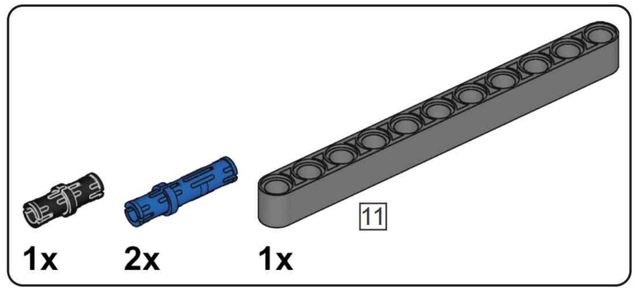

H69

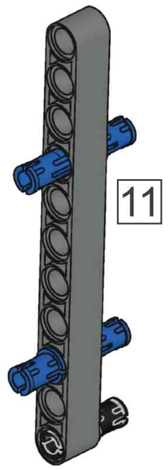

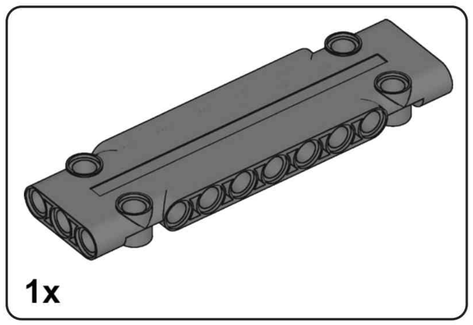

H70

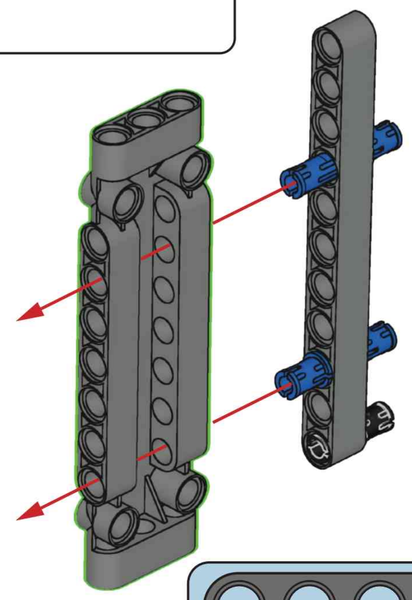

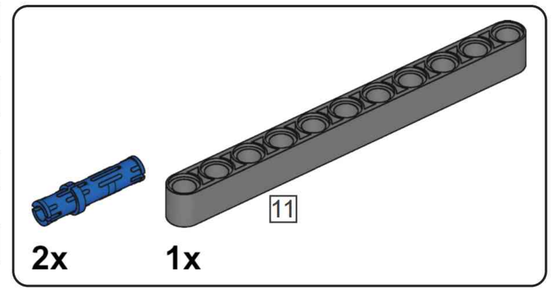

H71

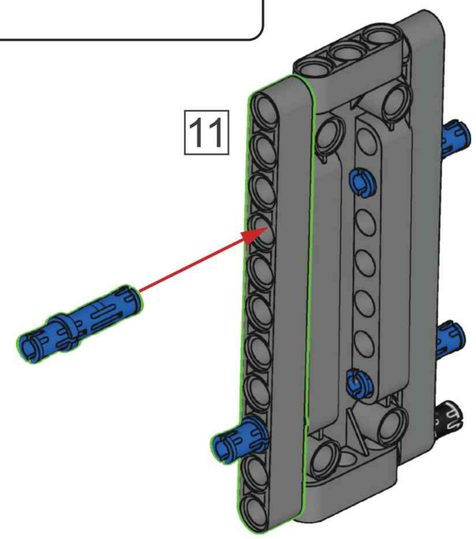

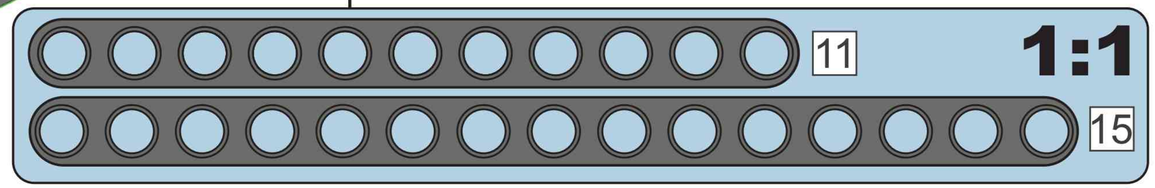

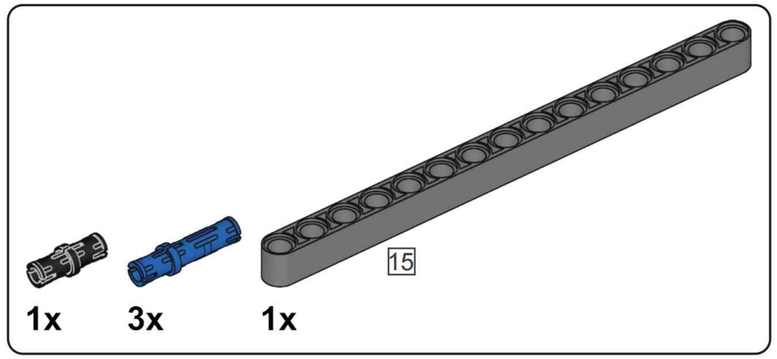

H72

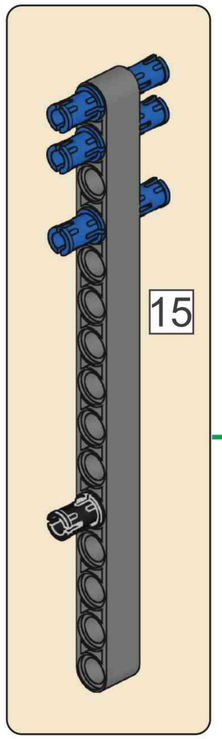

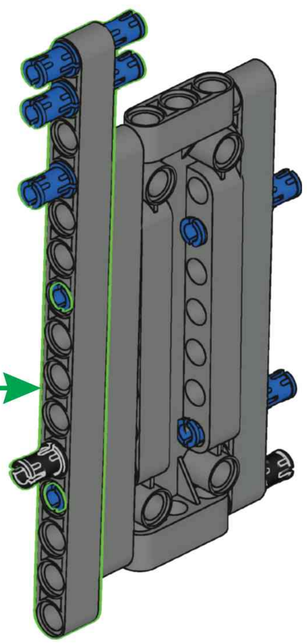

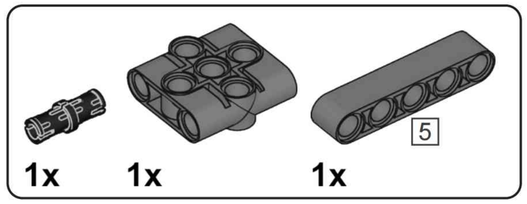

H73

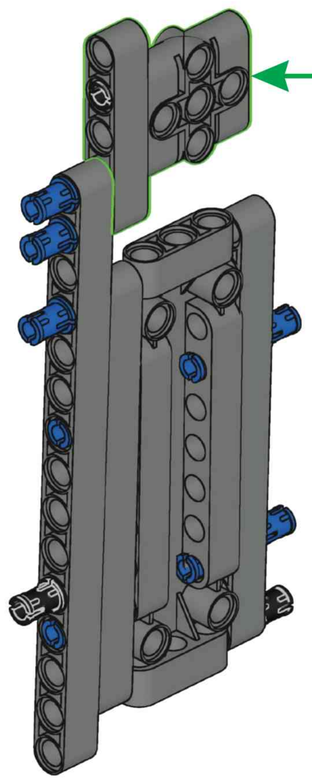

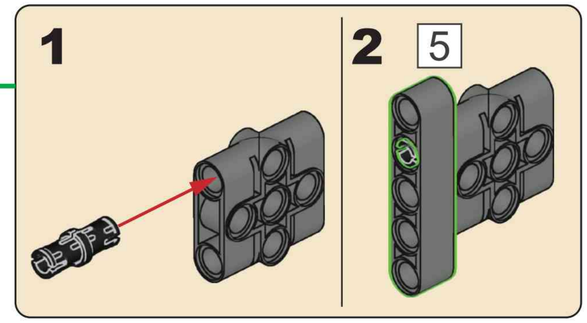

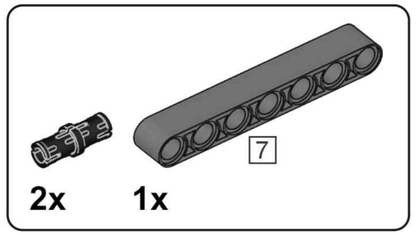

H74

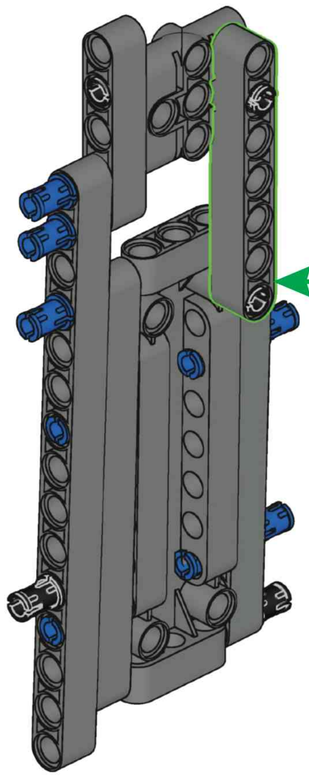

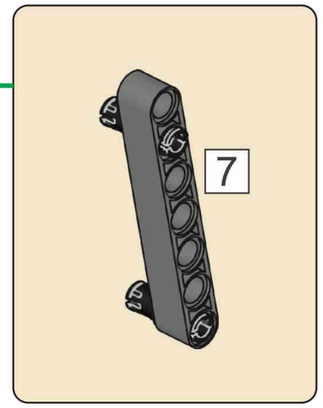

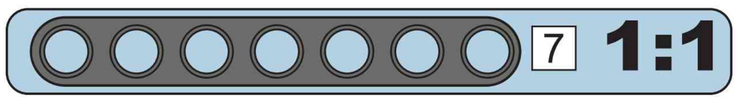

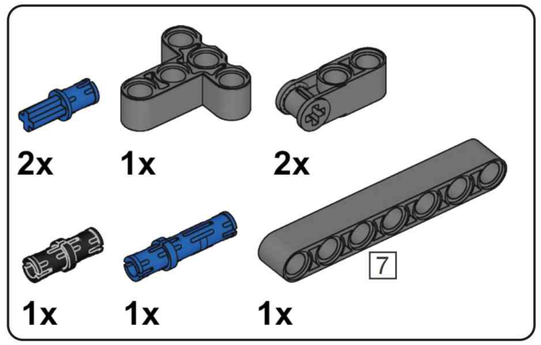

H75

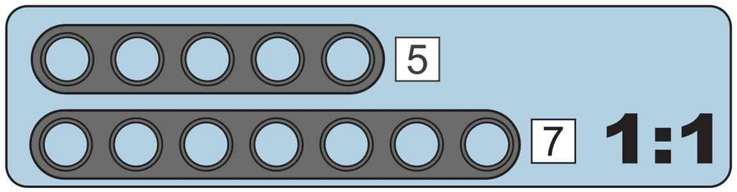

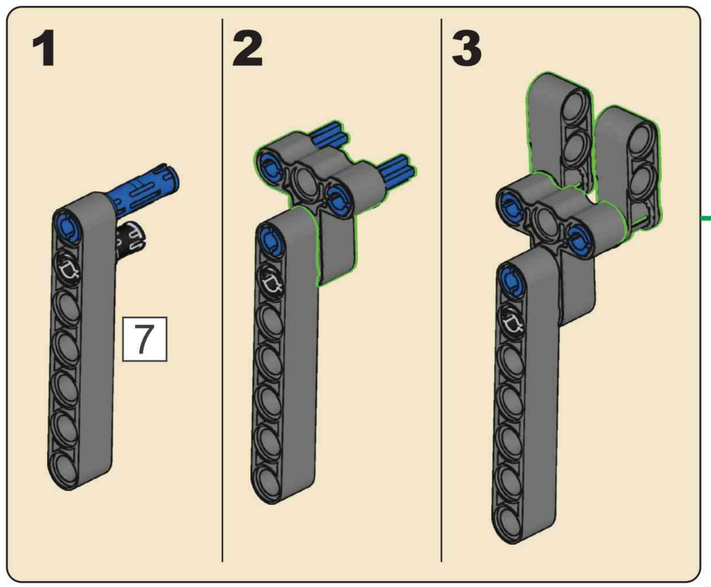

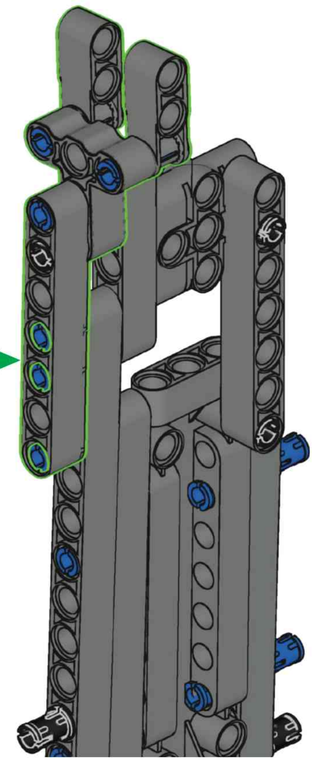

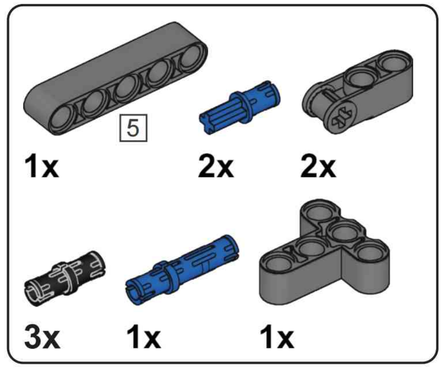

H76

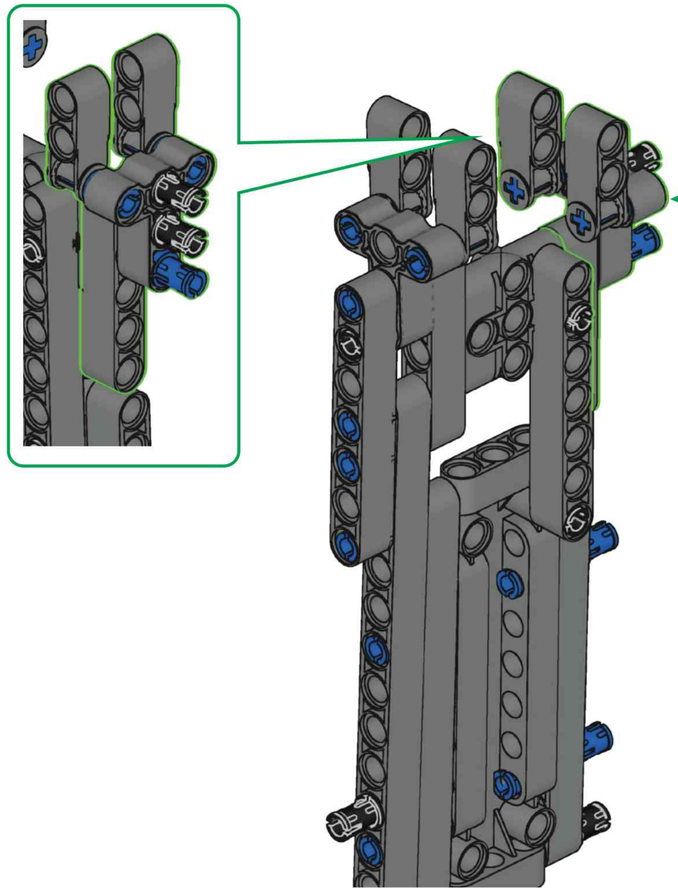

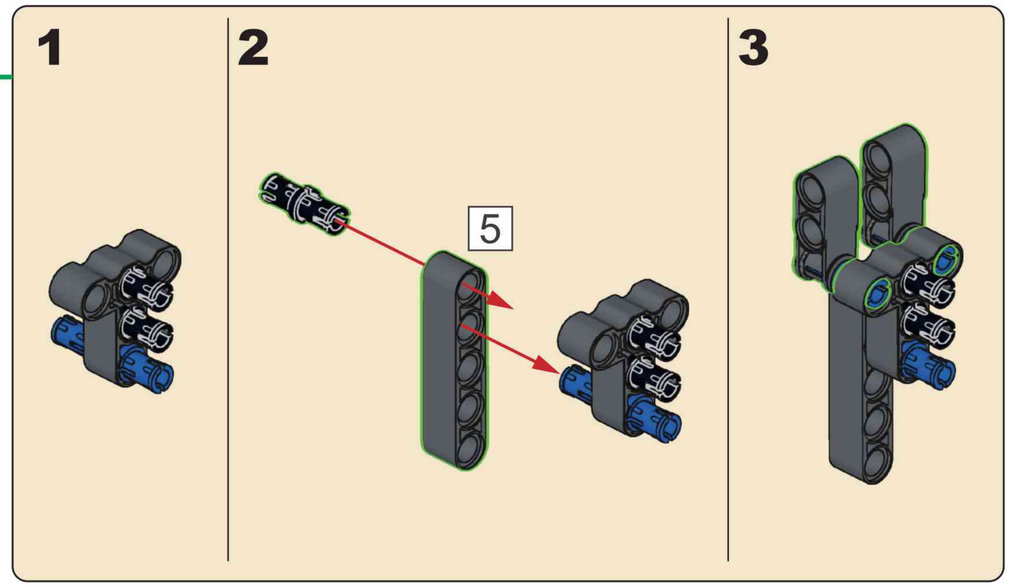

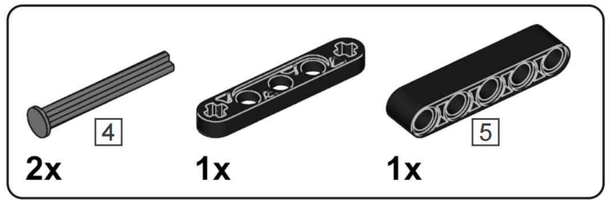

H77

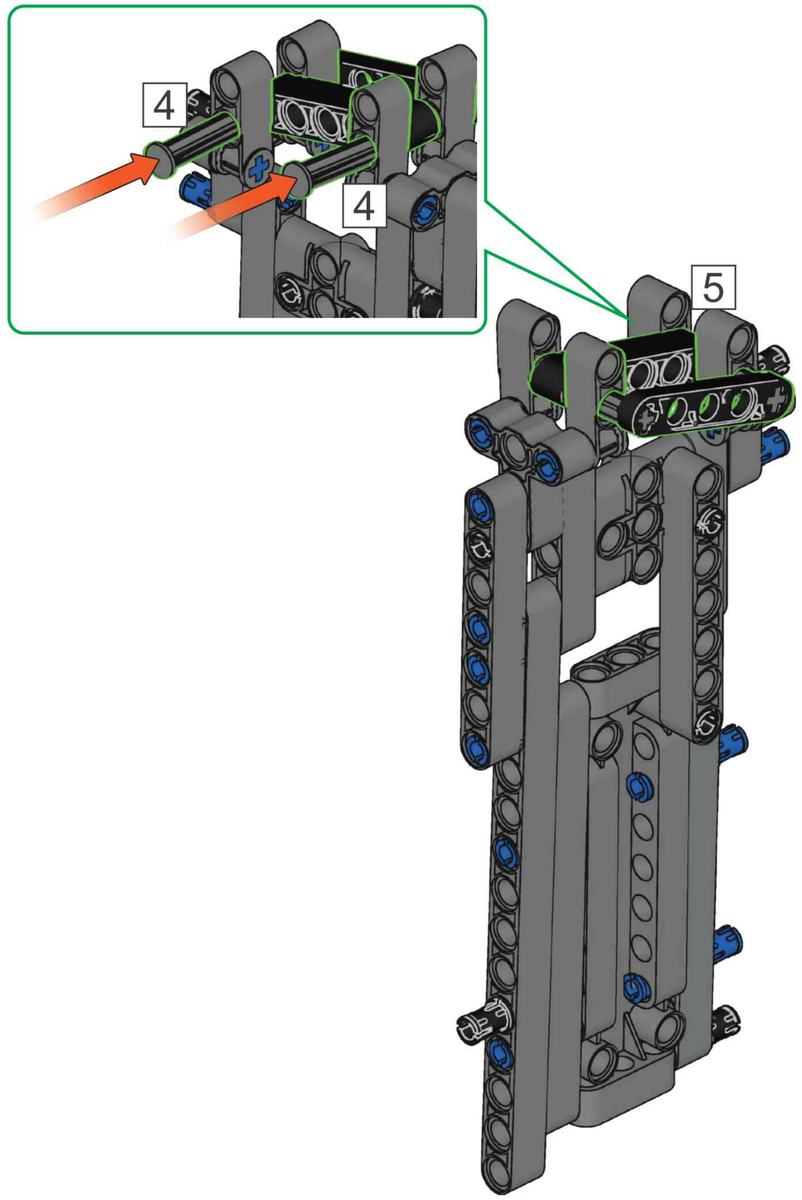

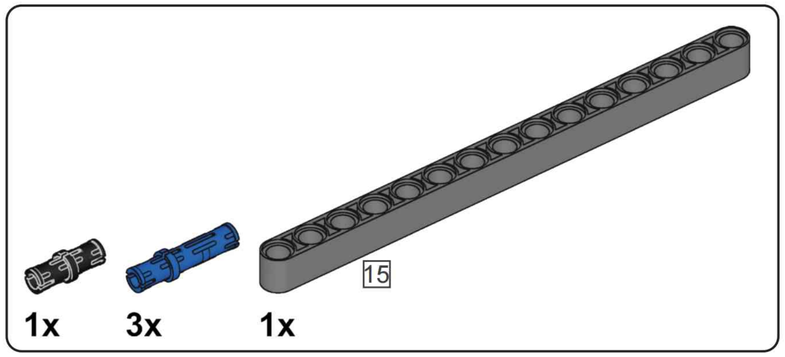

H78

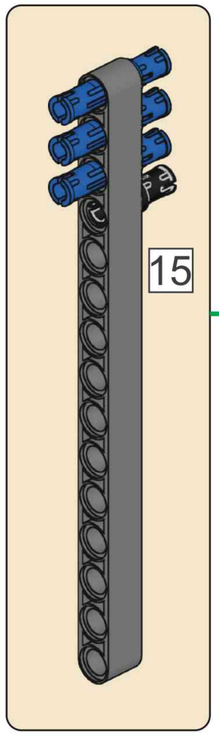

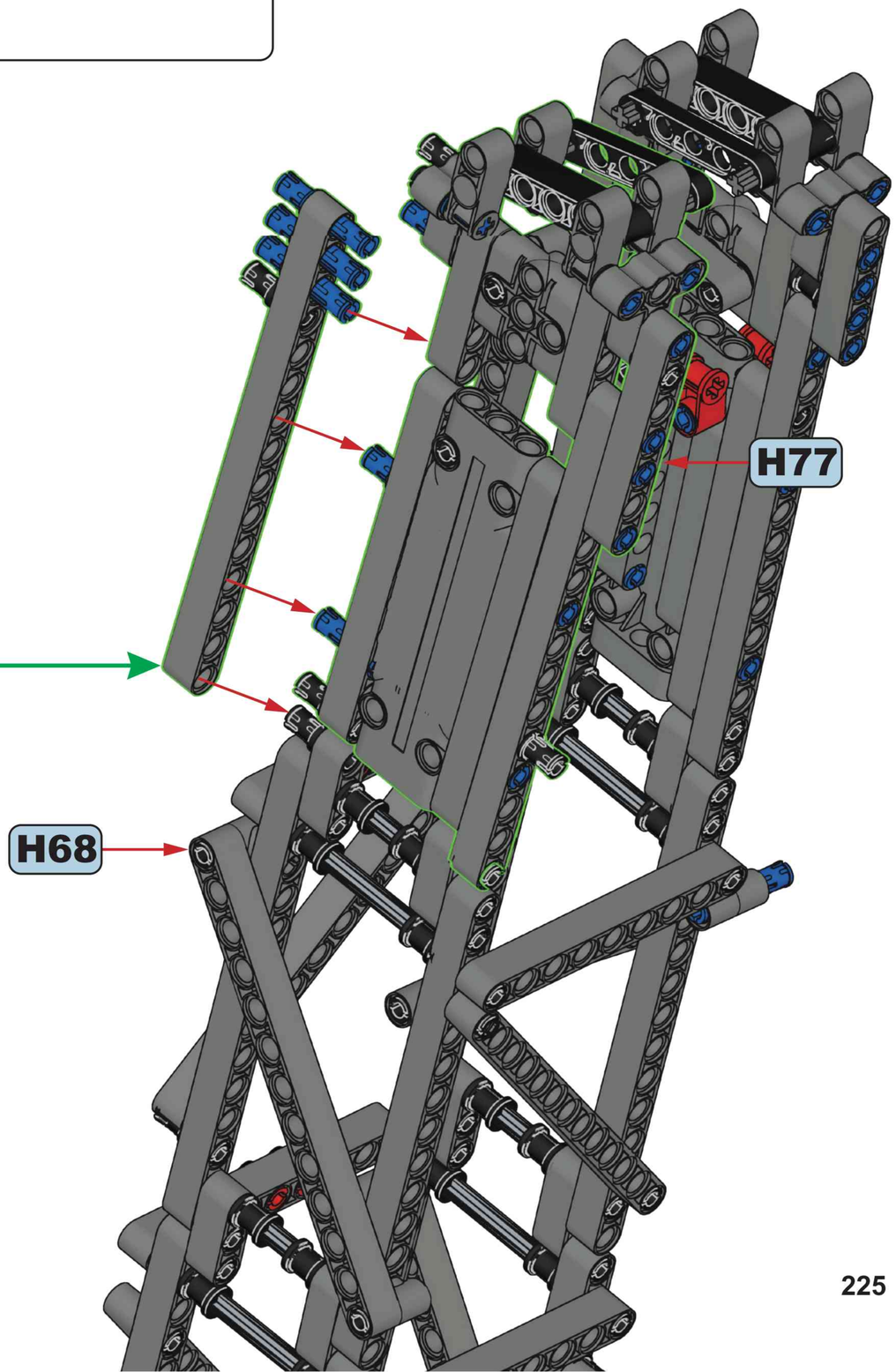

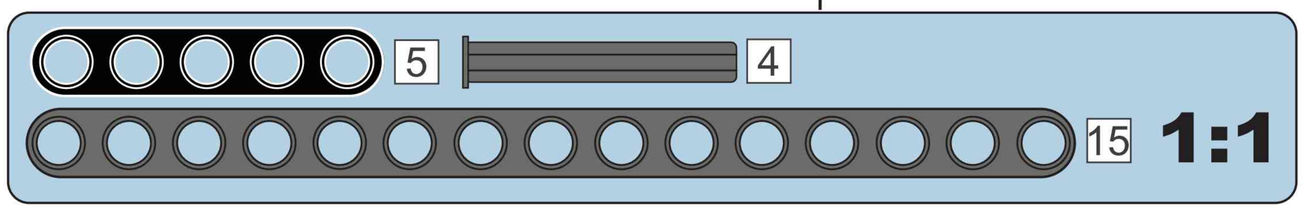

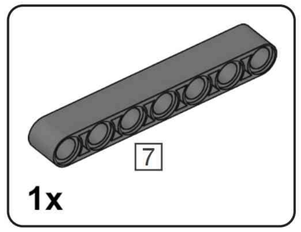

H79

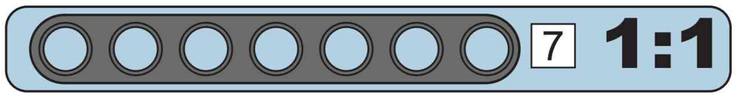

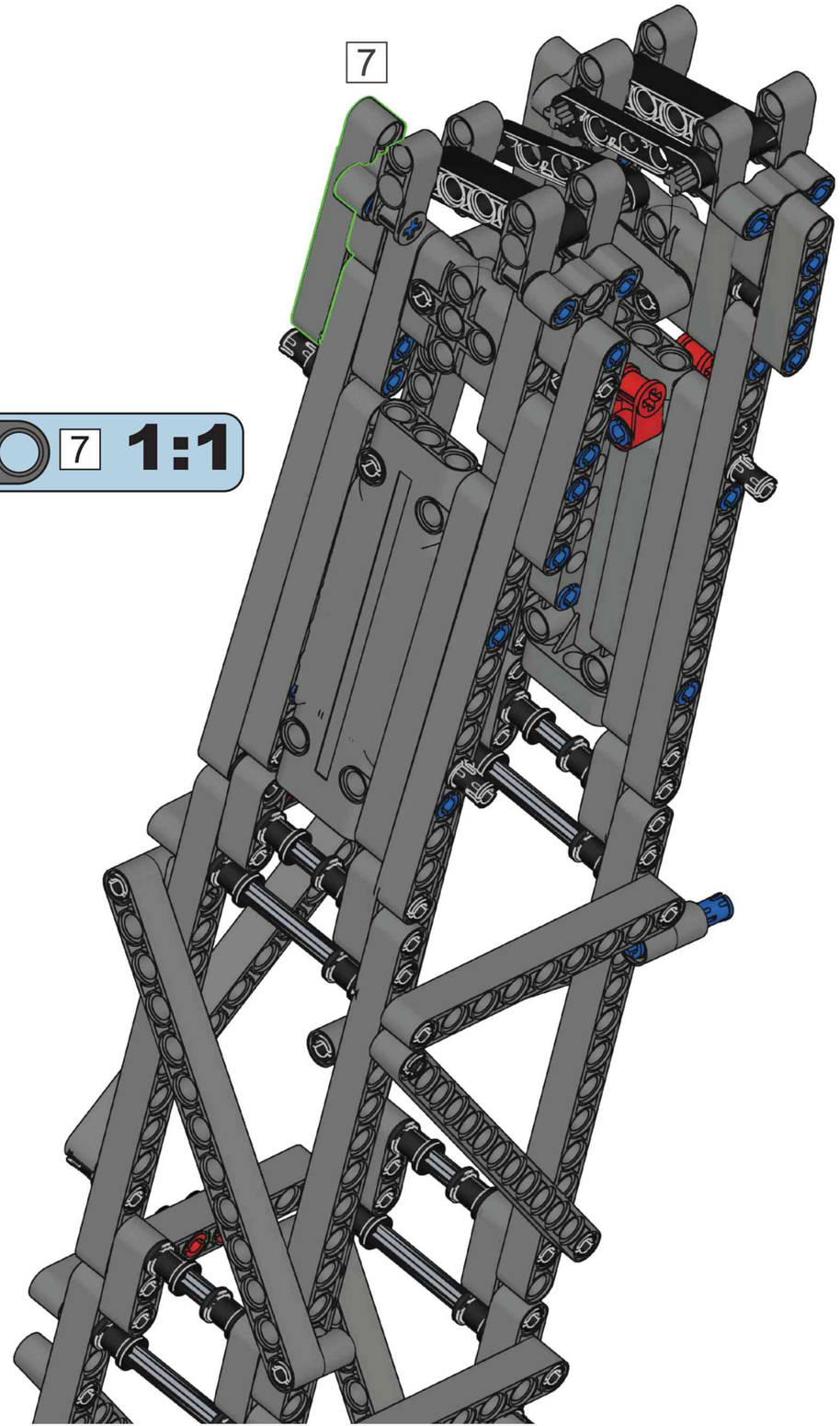

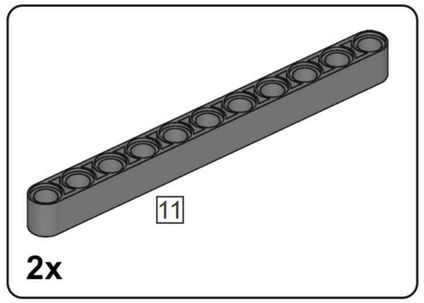

H80

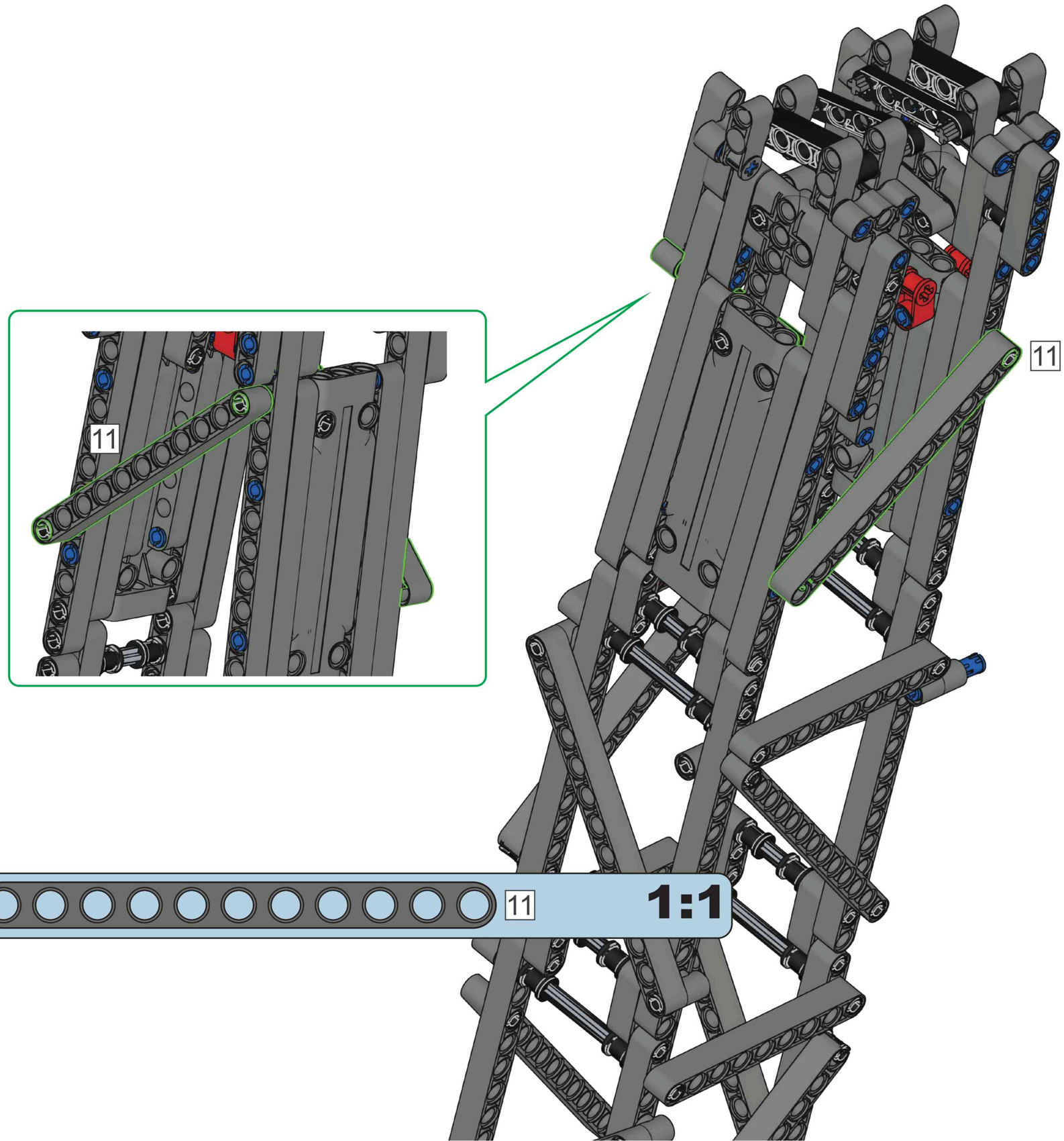

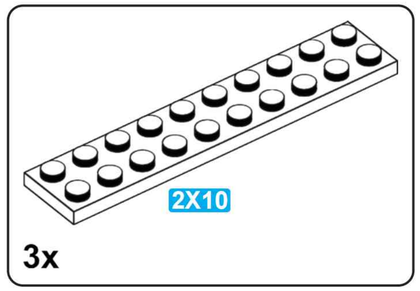

H81

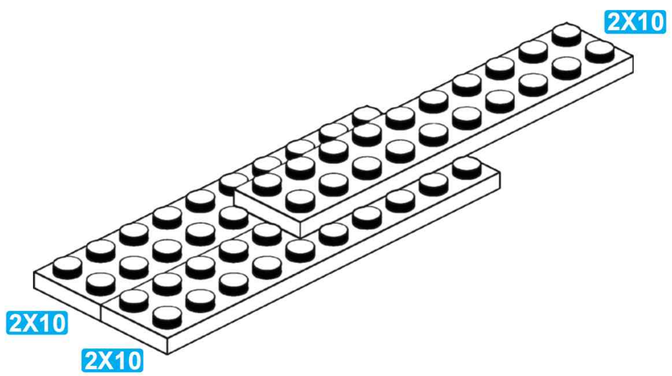

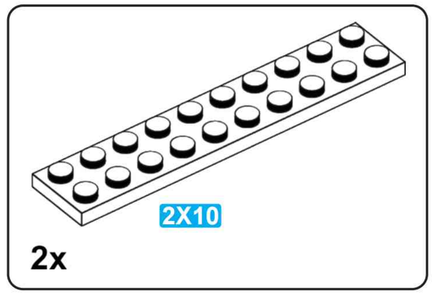

H82

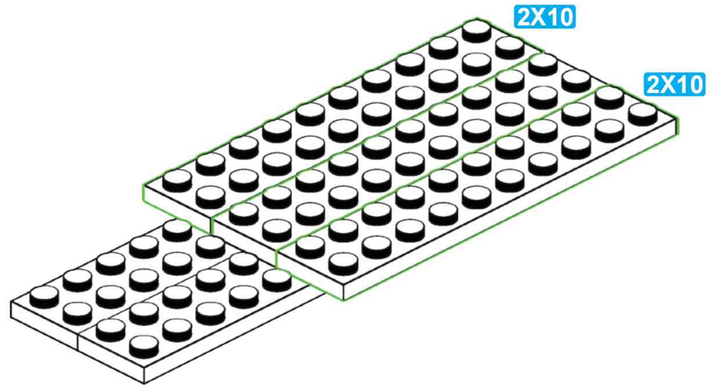

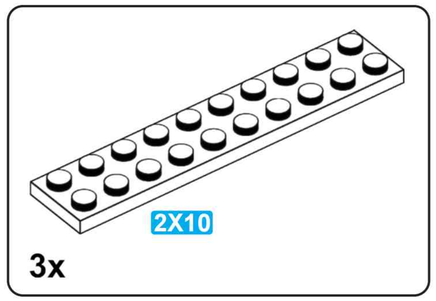

H83

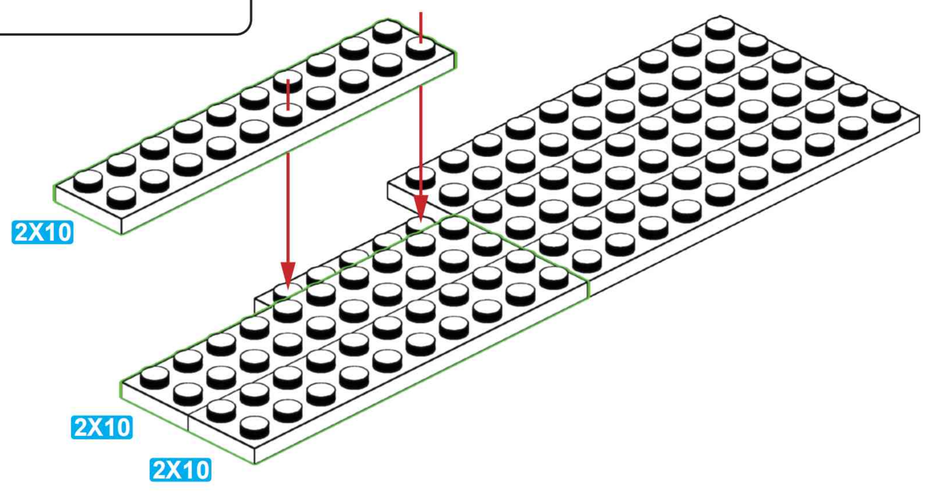

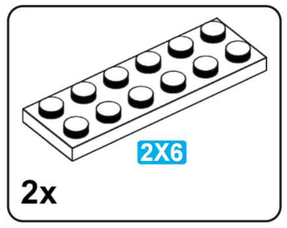

H84

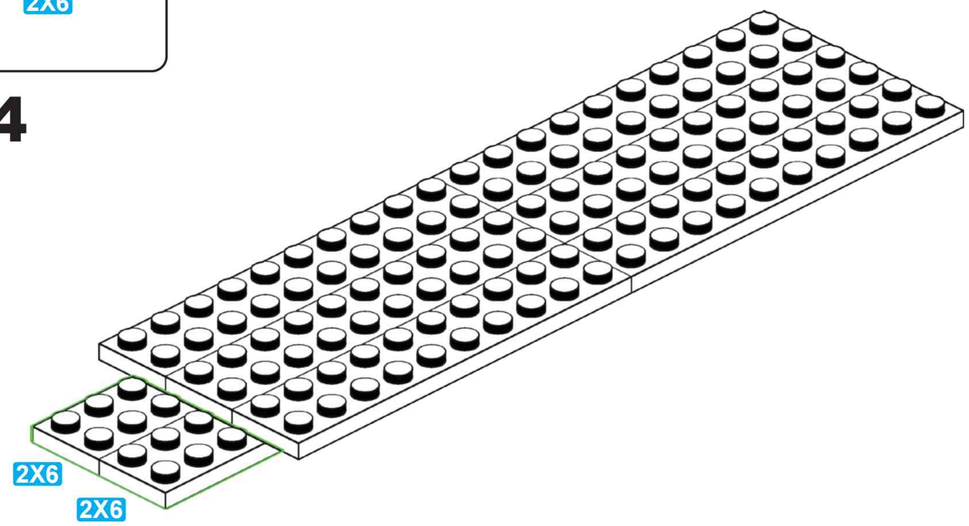

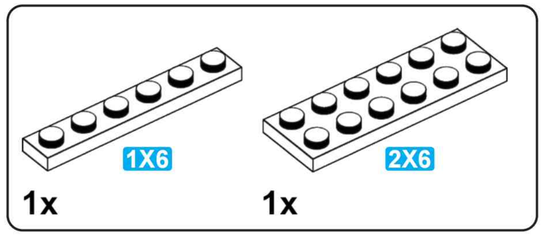

H85

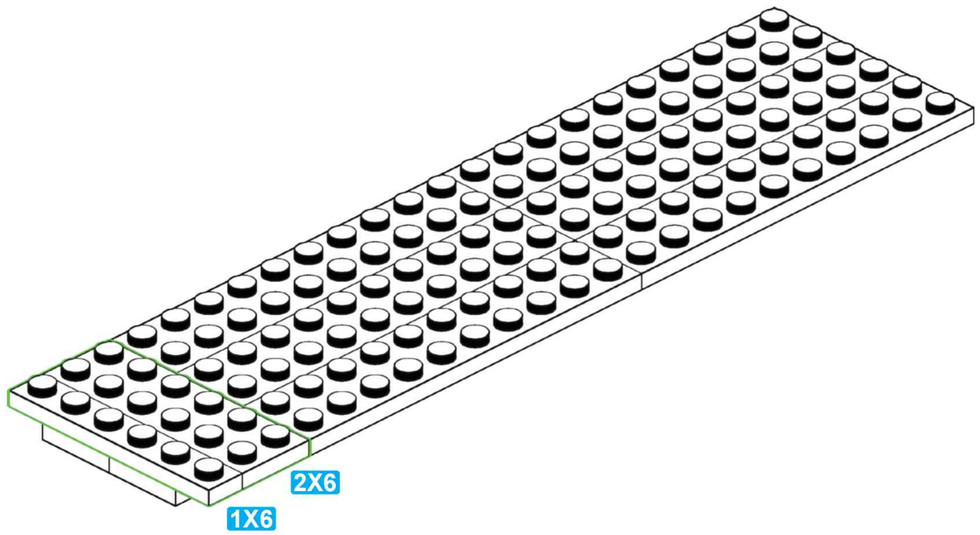

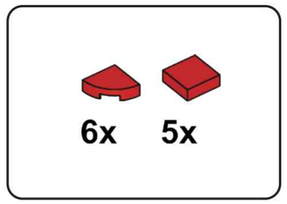

H86

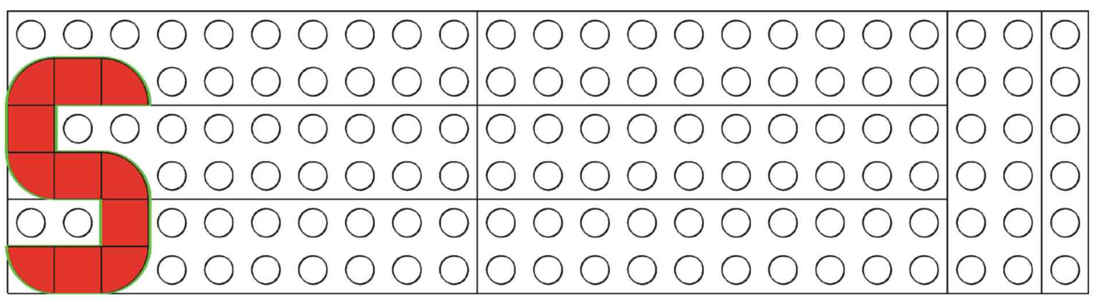

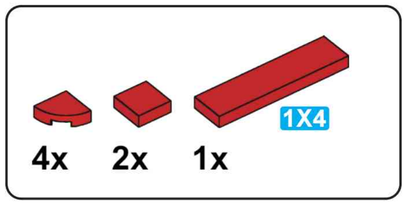

H87

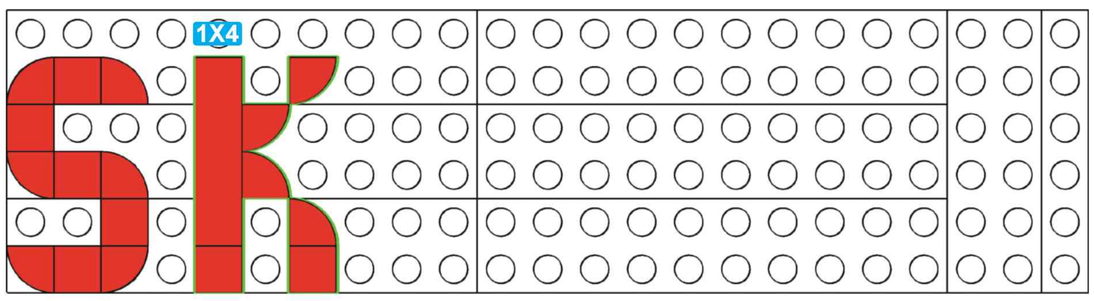

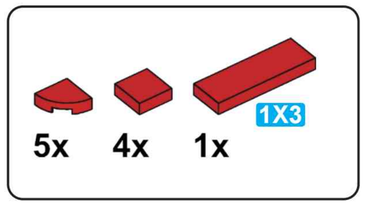

H88

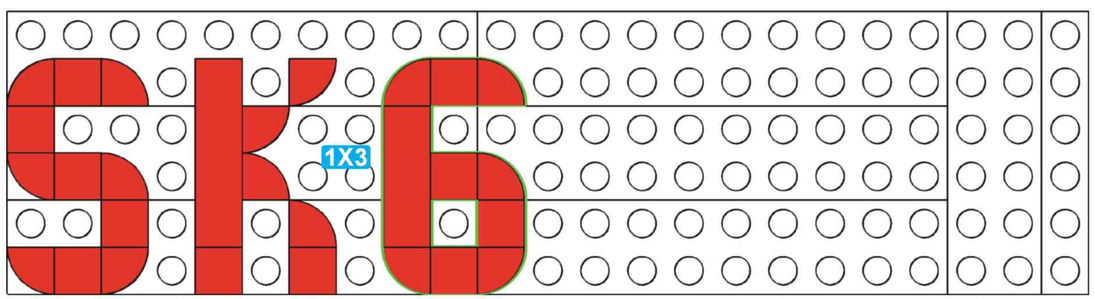

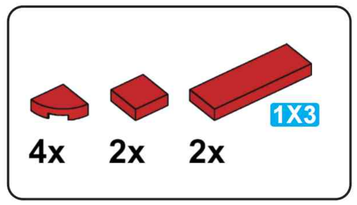

H89

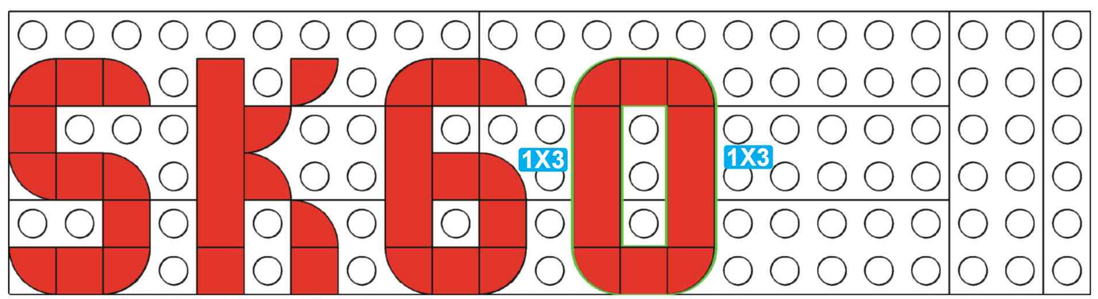

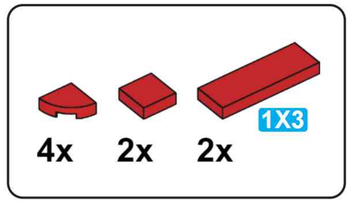

H90

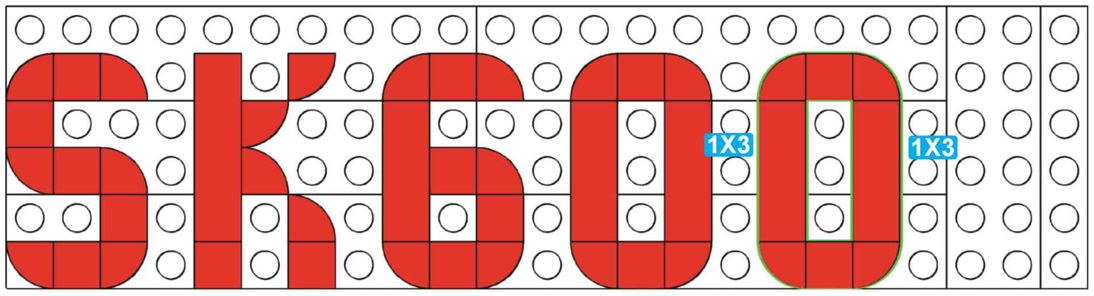

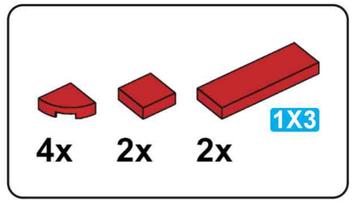

H91

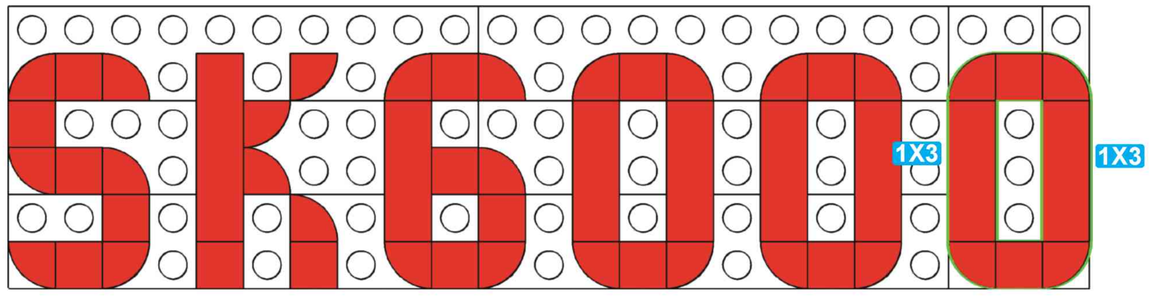

H92

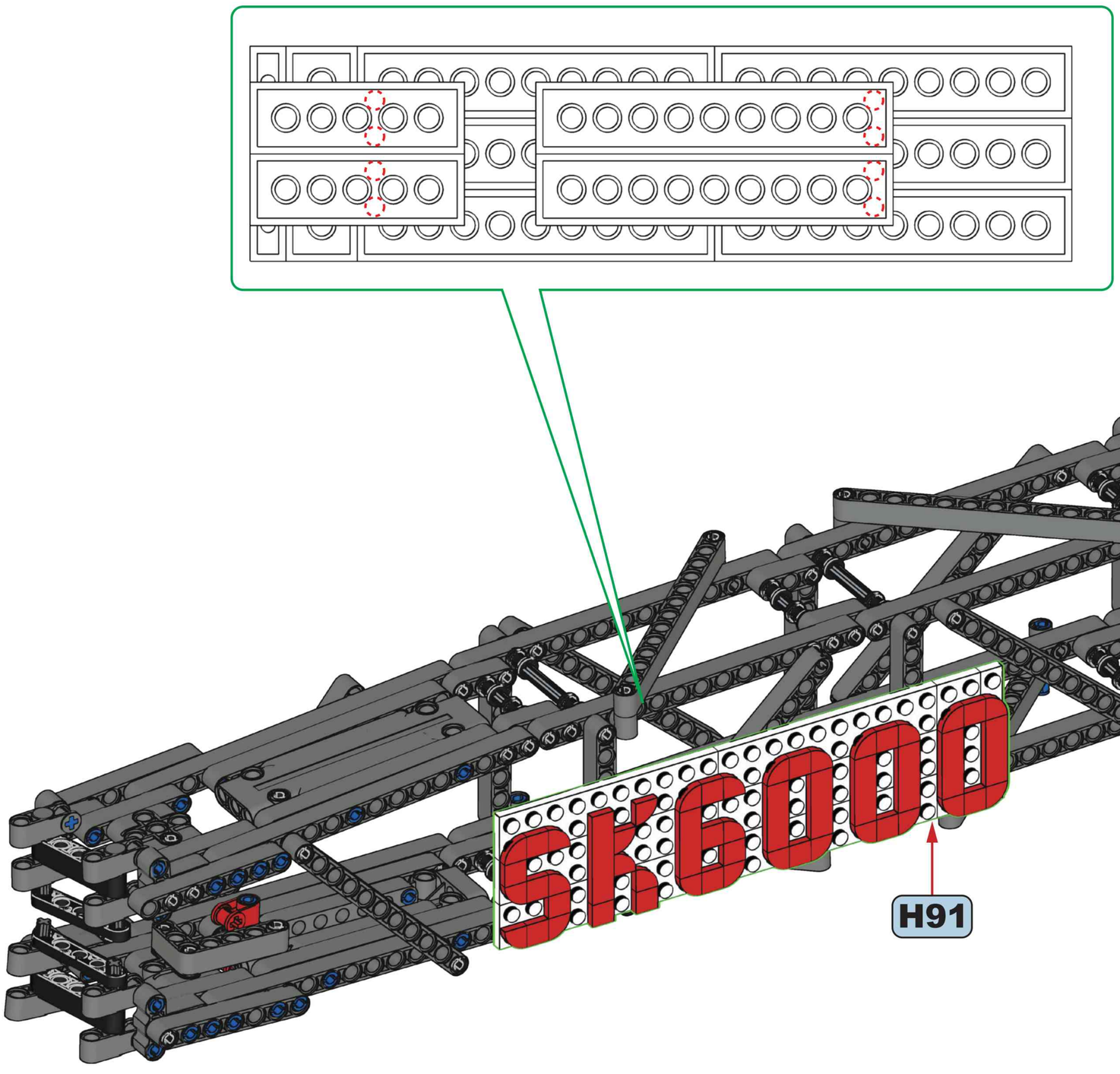


9

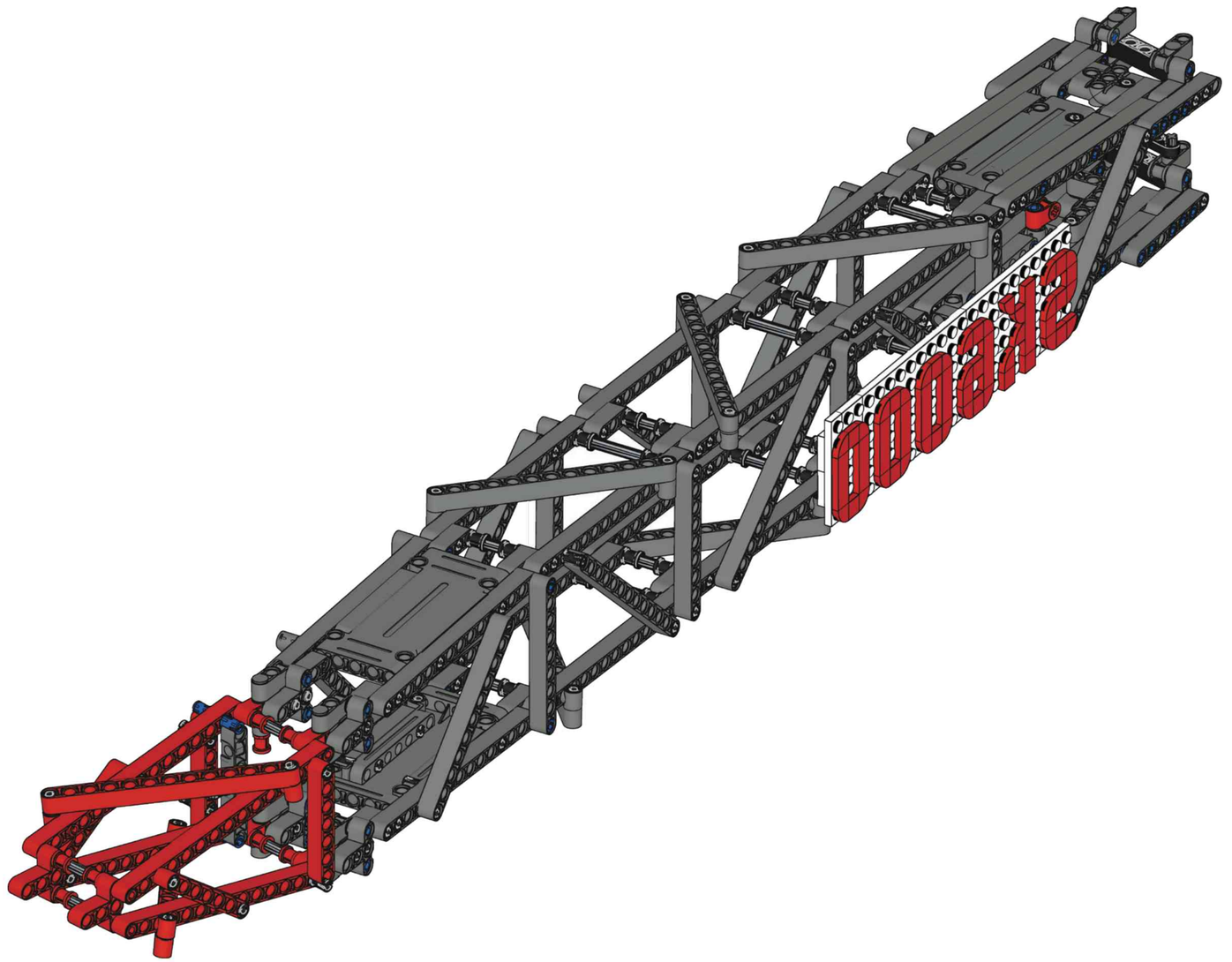

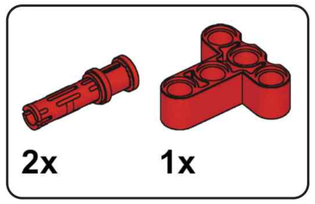

I1

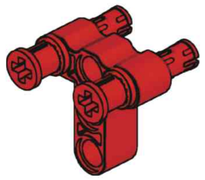

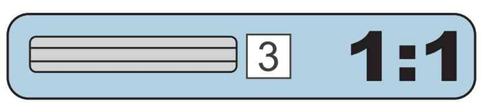

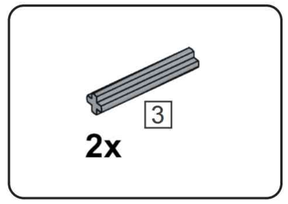

I2

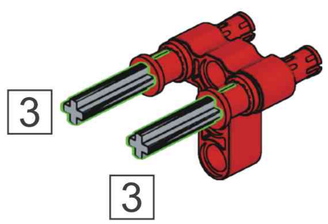

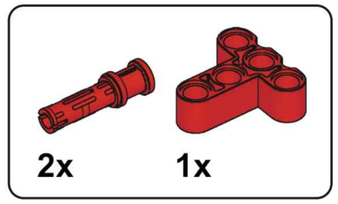

I3

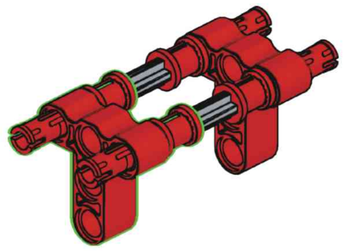

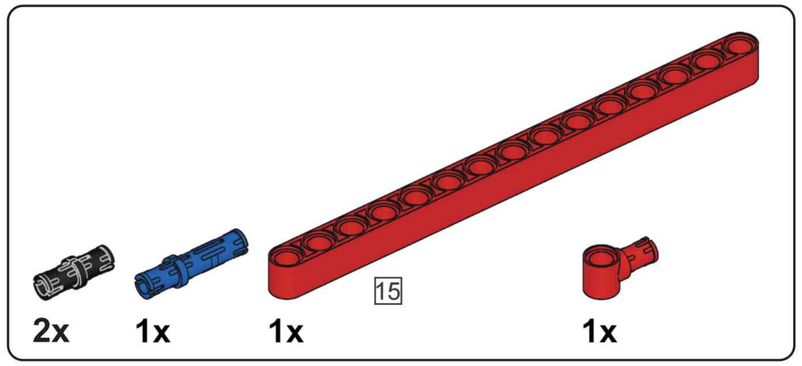

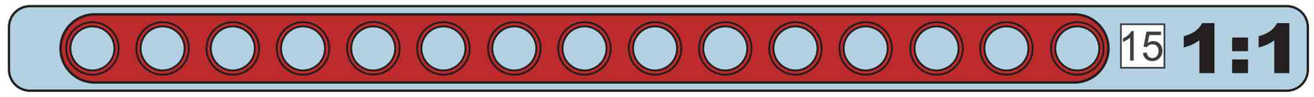

14

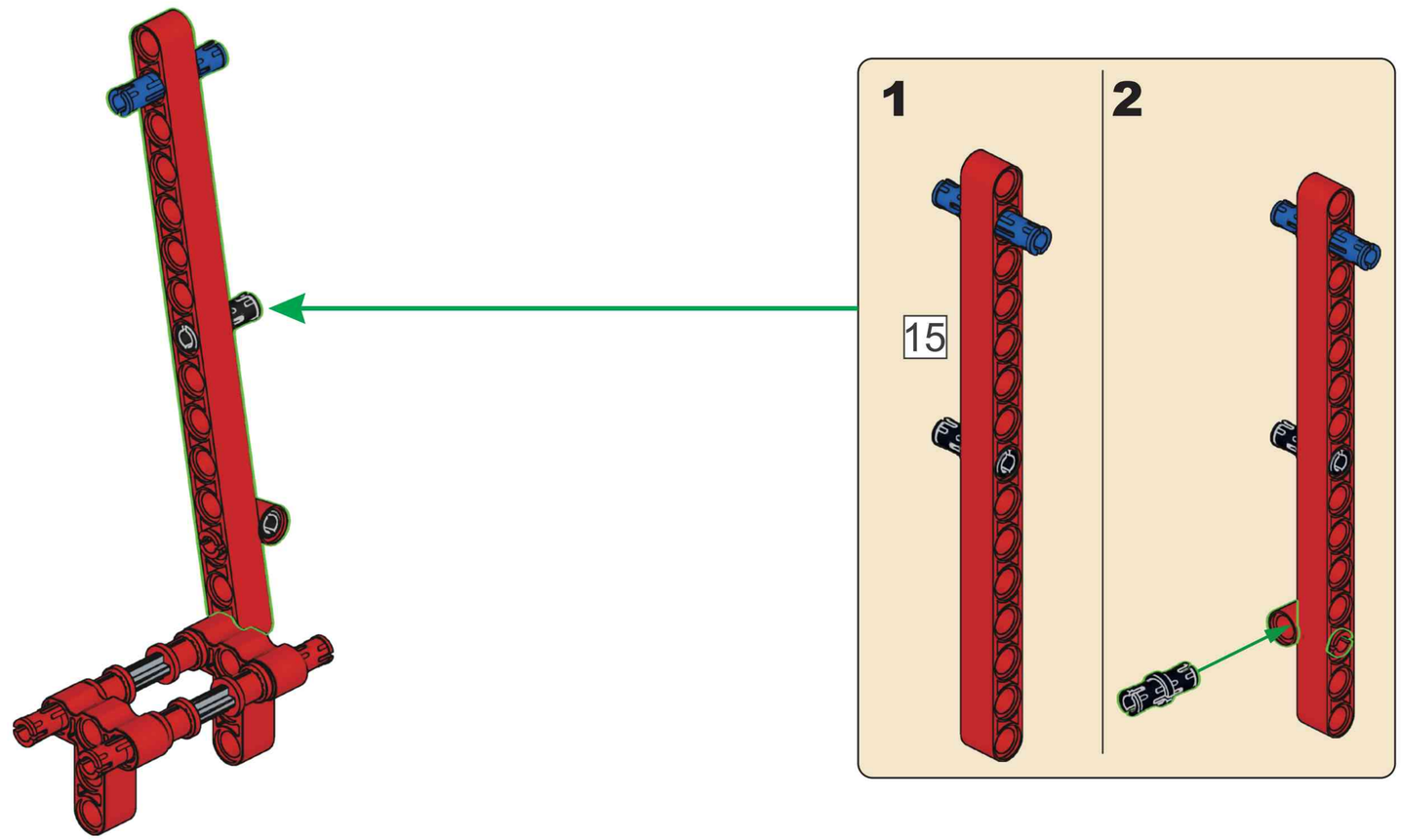

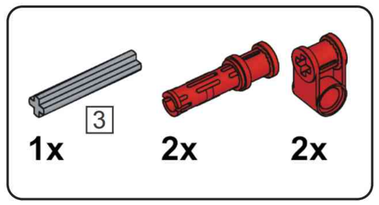

I5

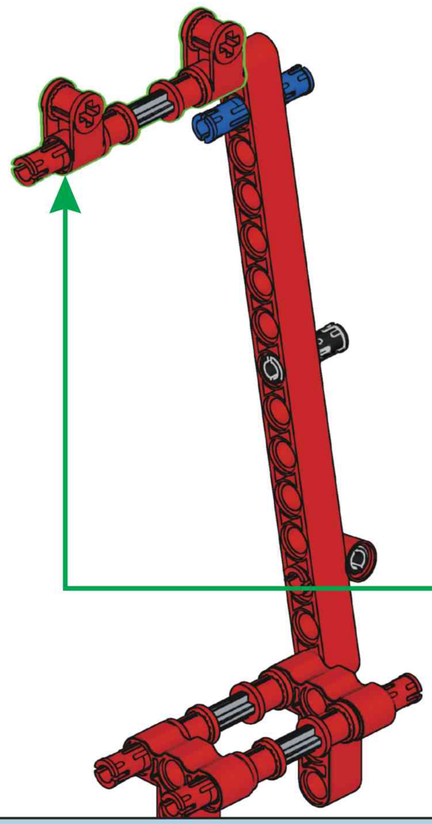

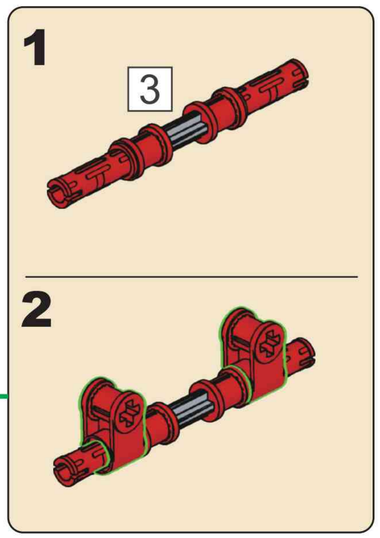

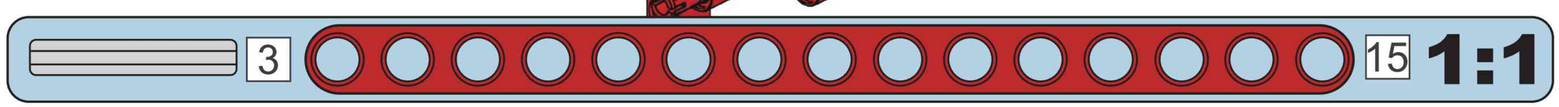

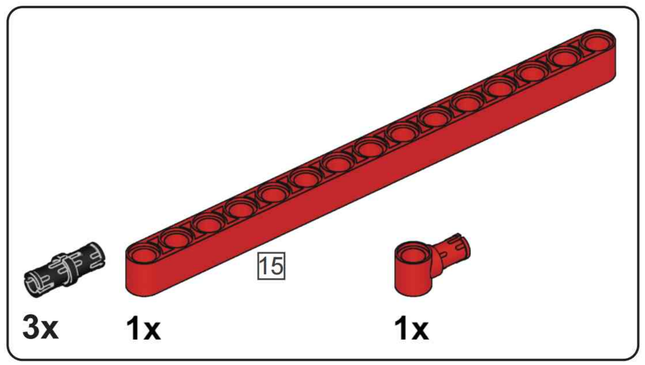

I6

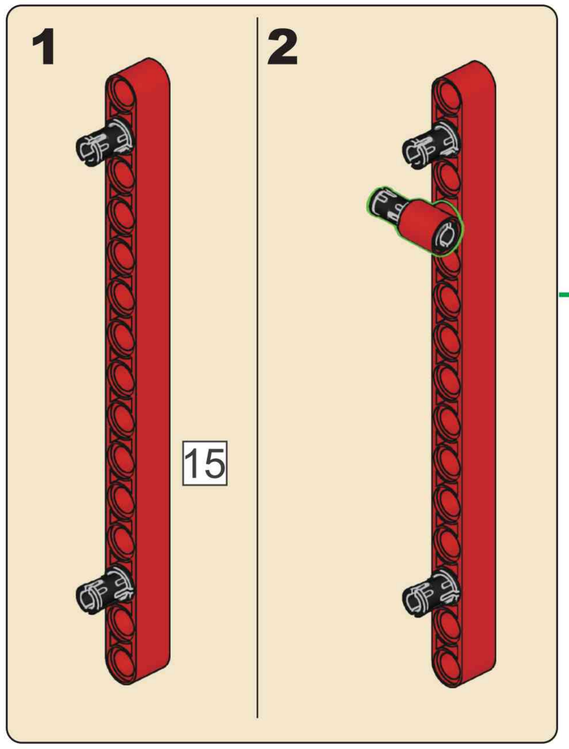

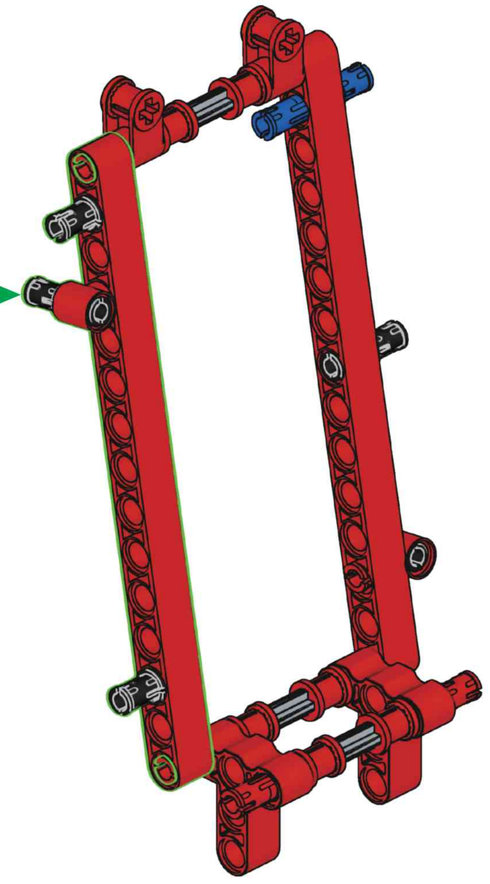

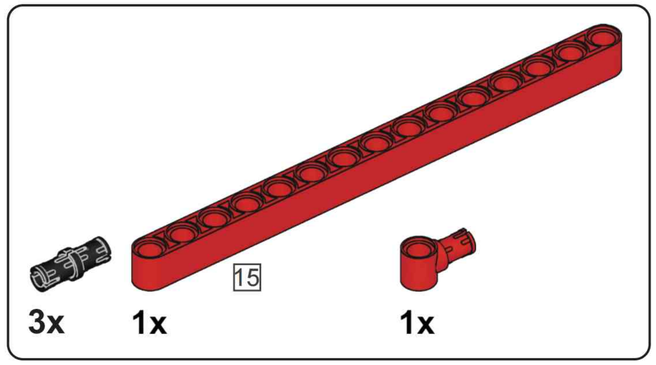

I7

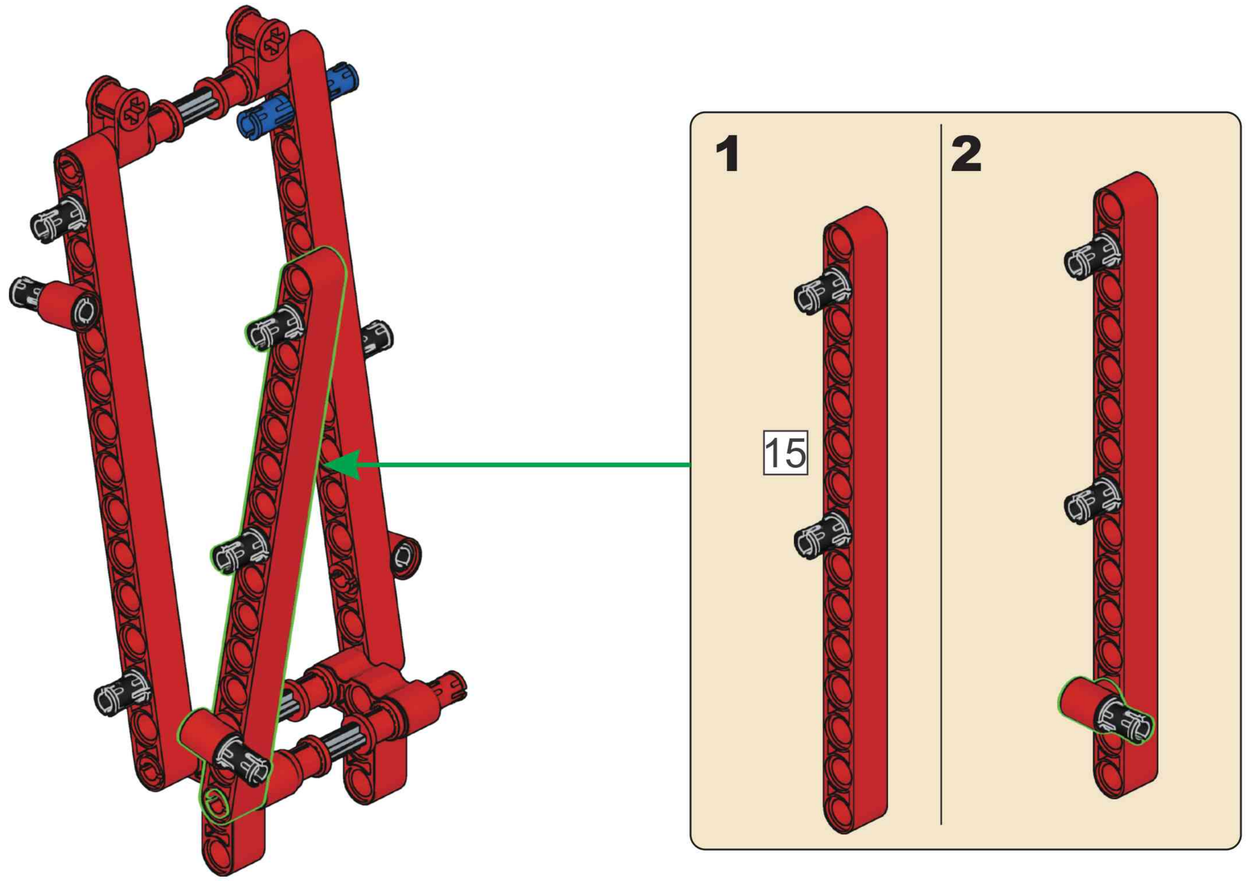

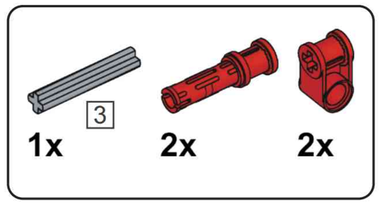

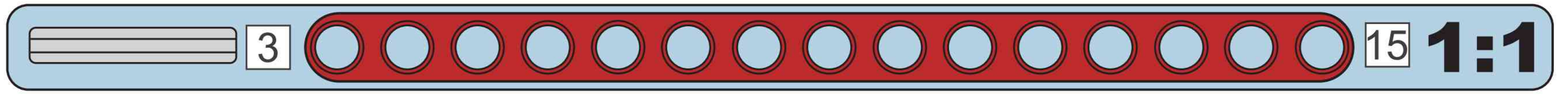

I8

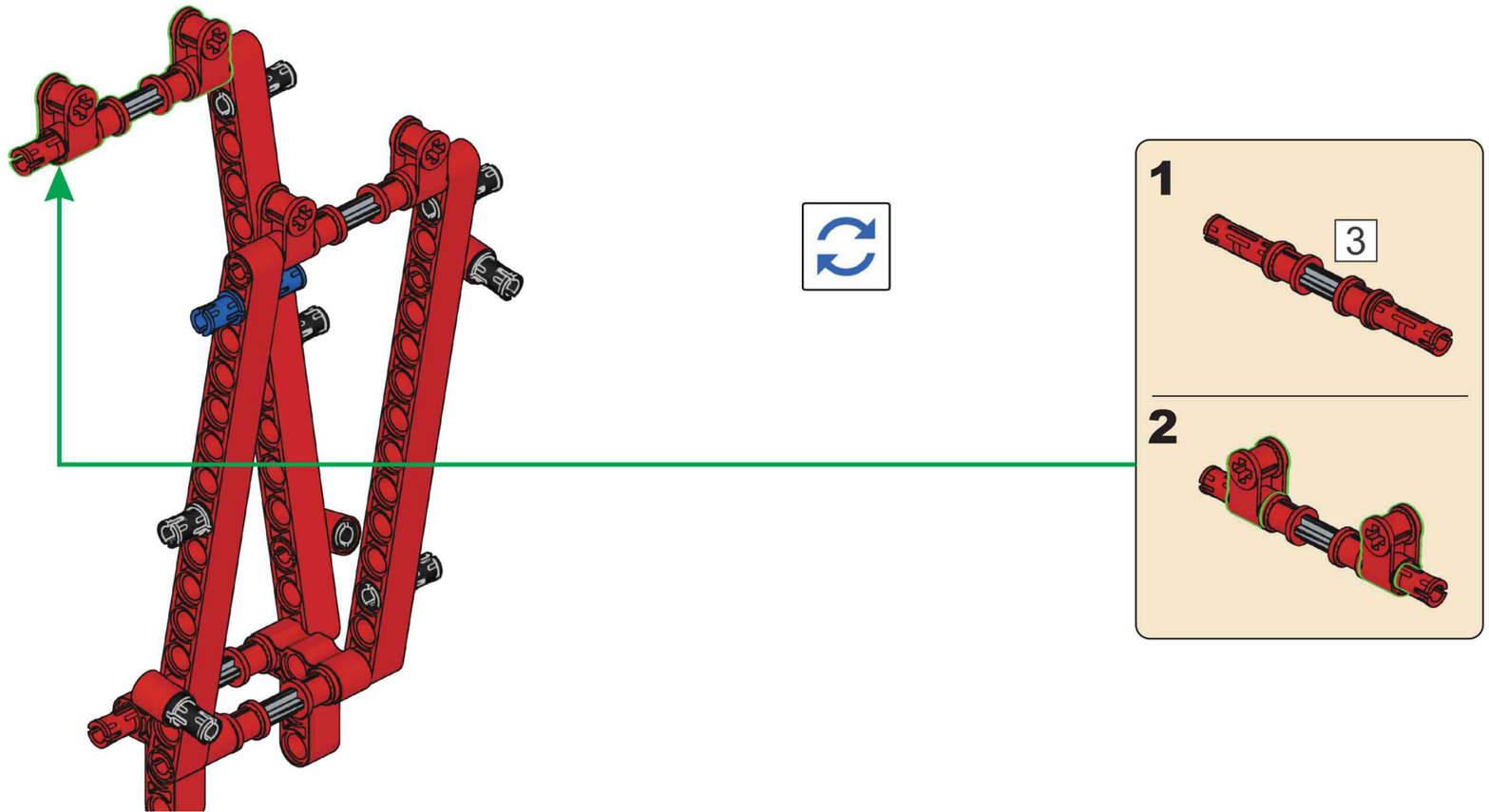

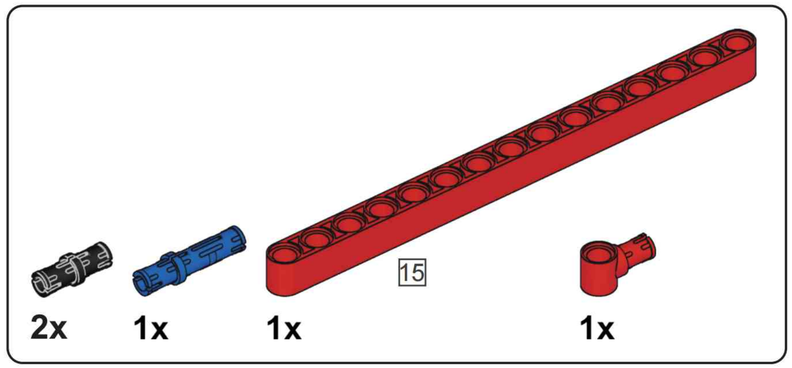

I9

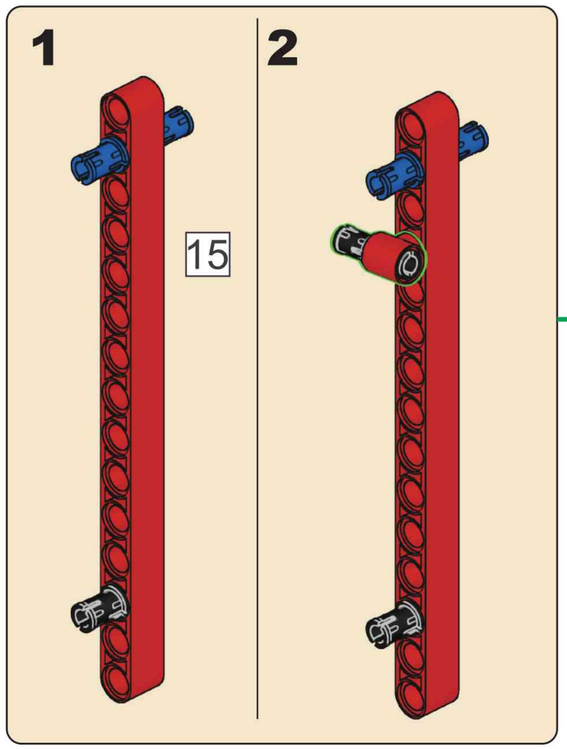

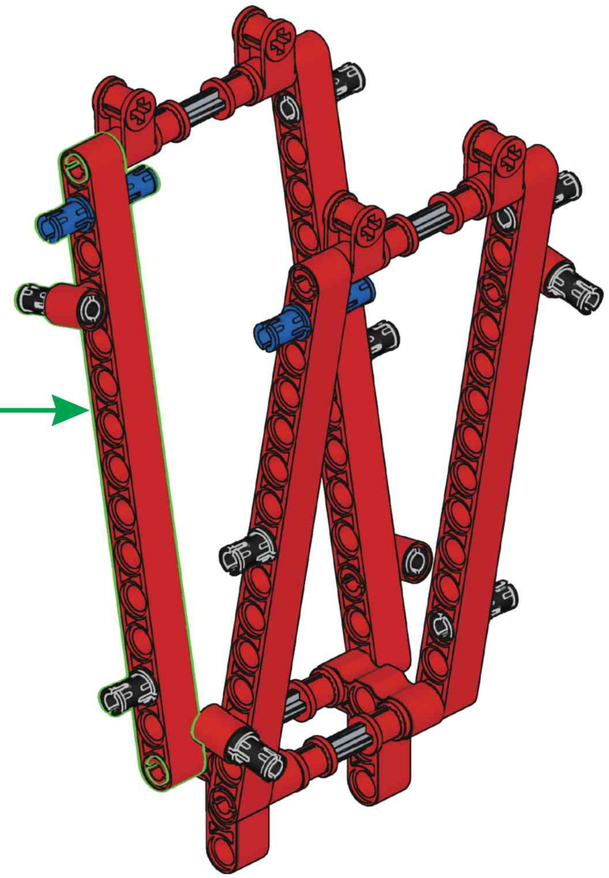

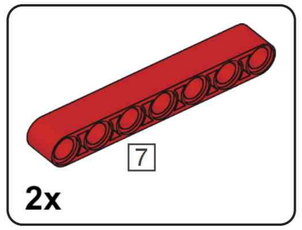

I10

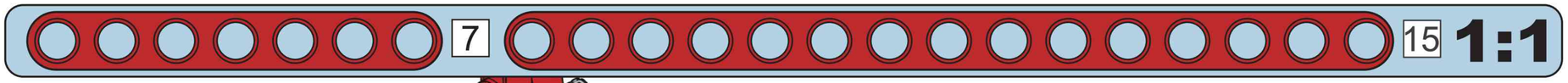

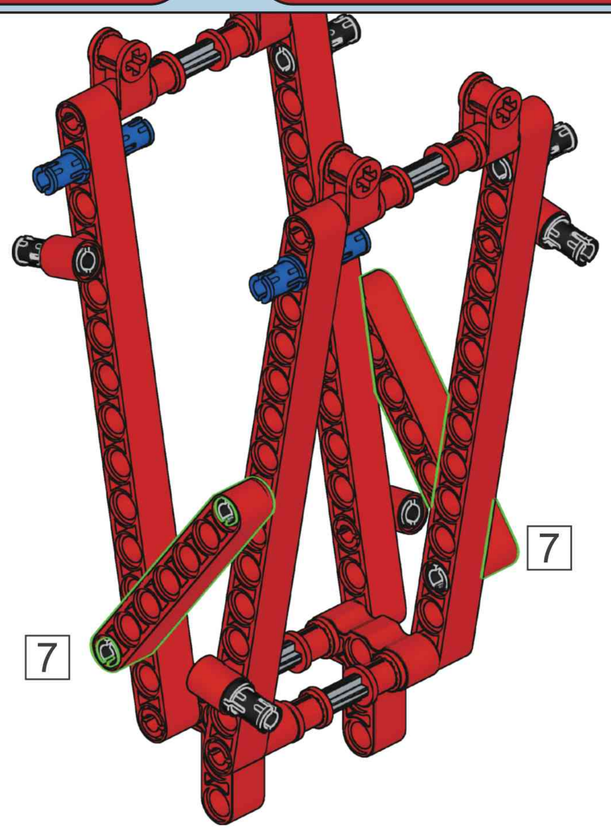

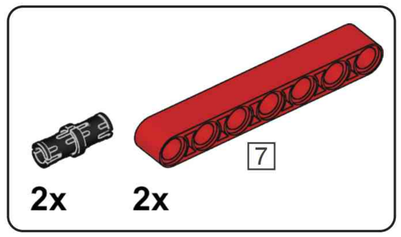

I11

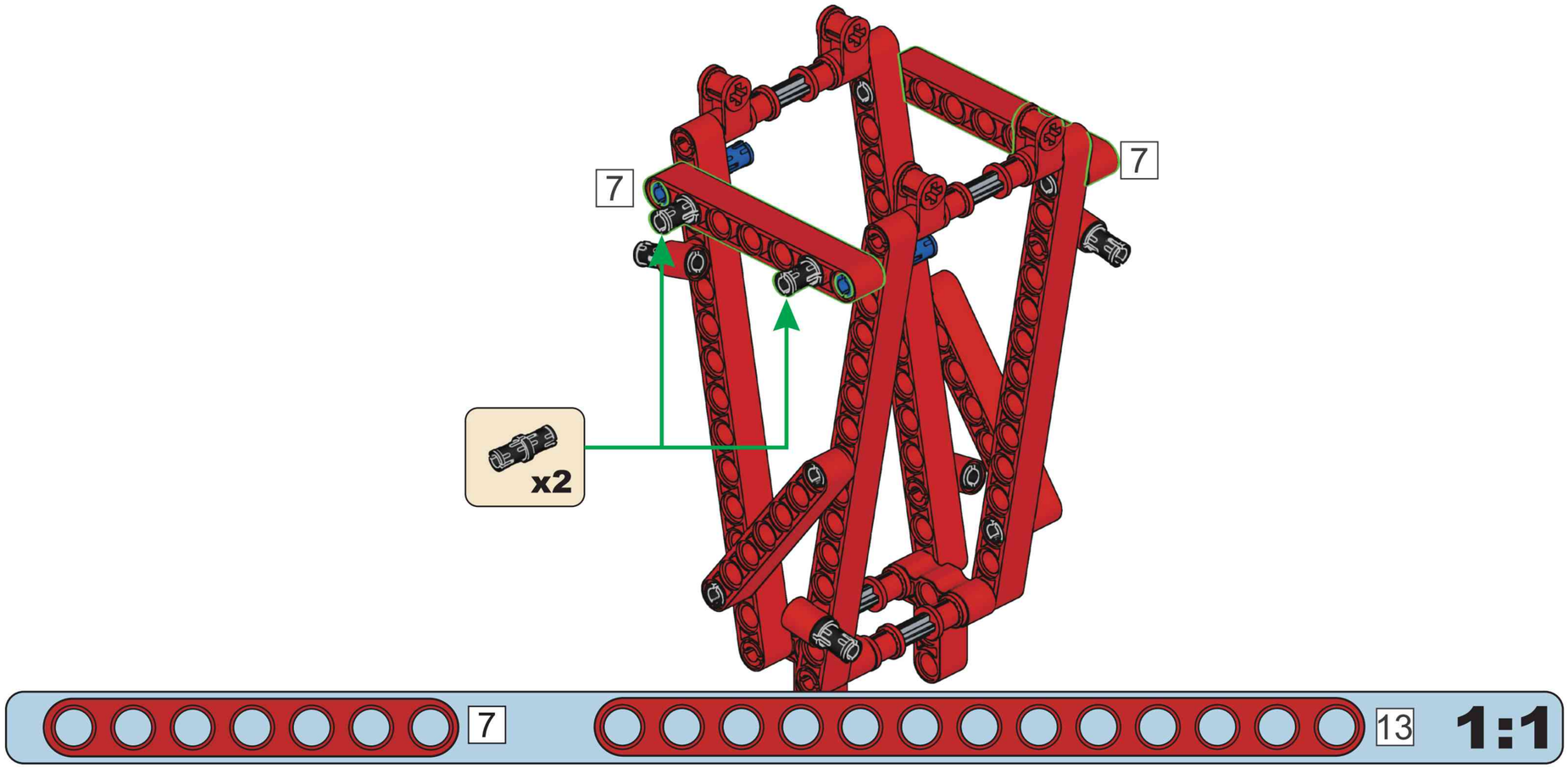

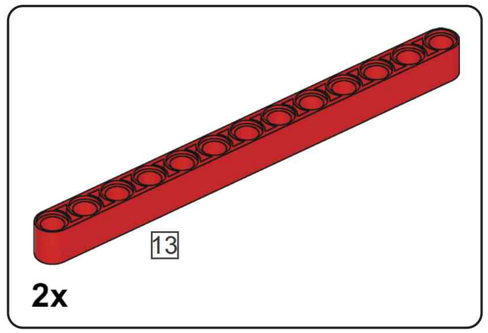

I12

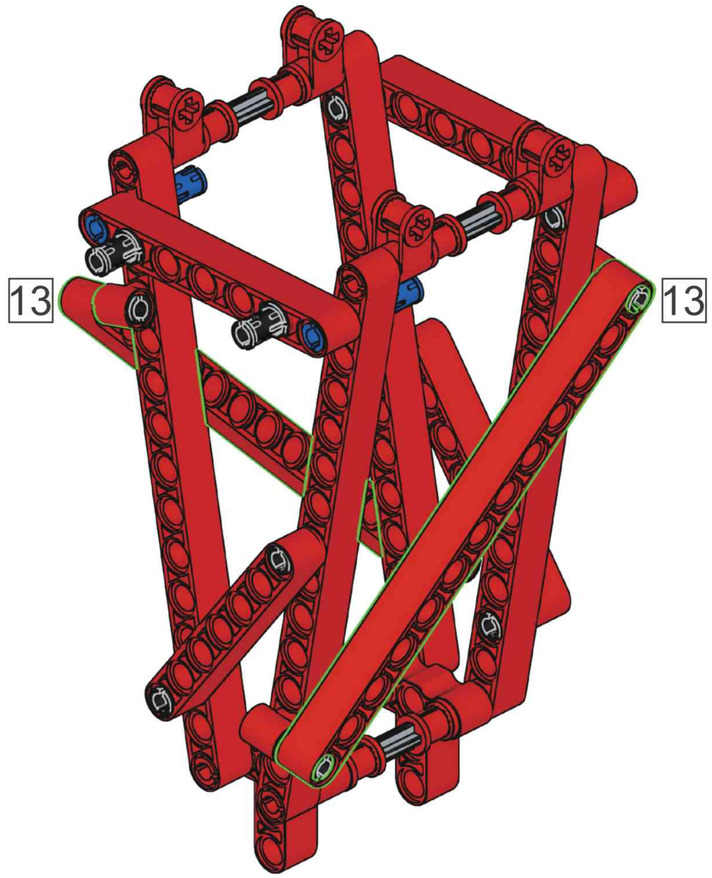

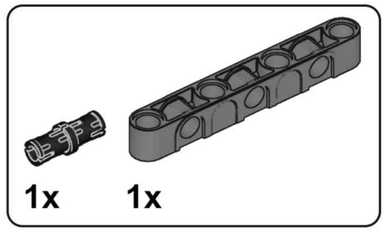

I13

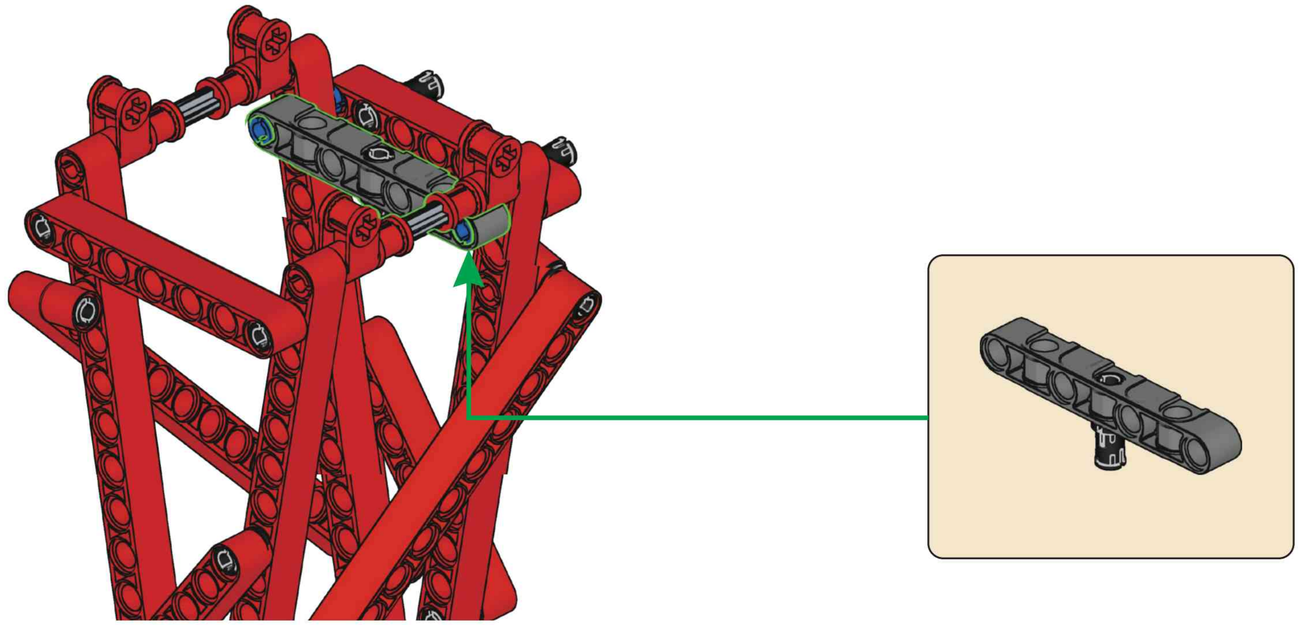

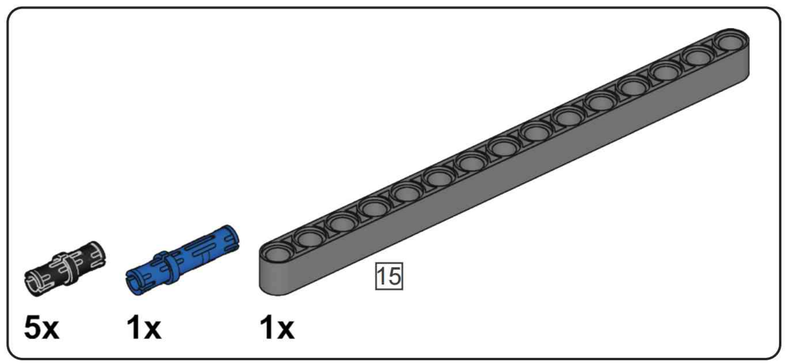

I14

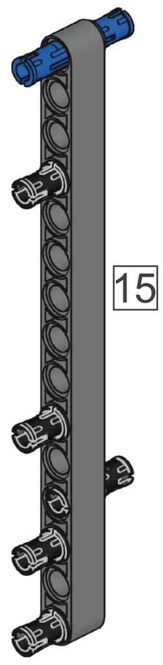

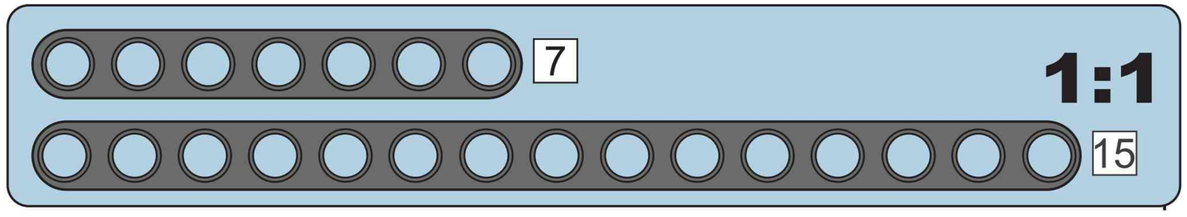

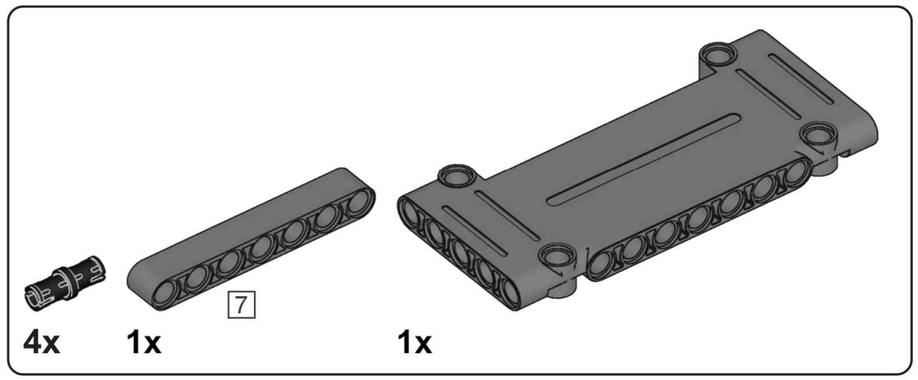

I15

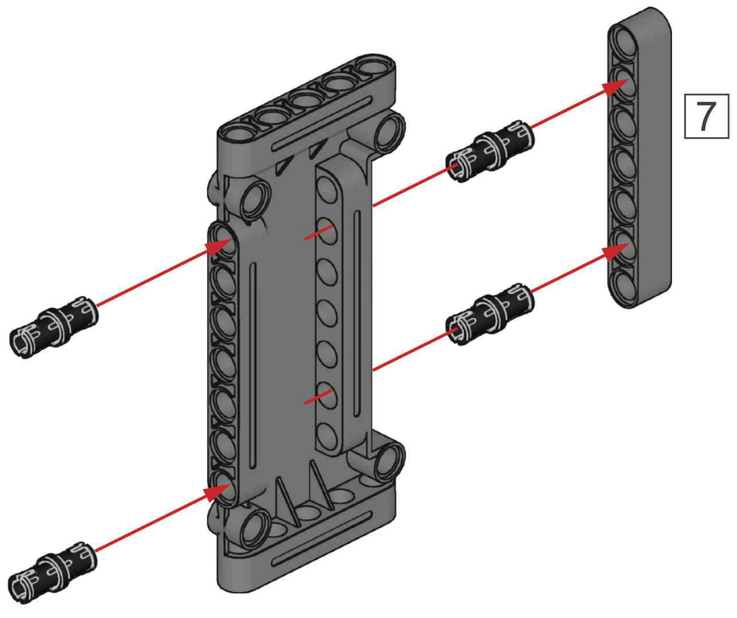

I16

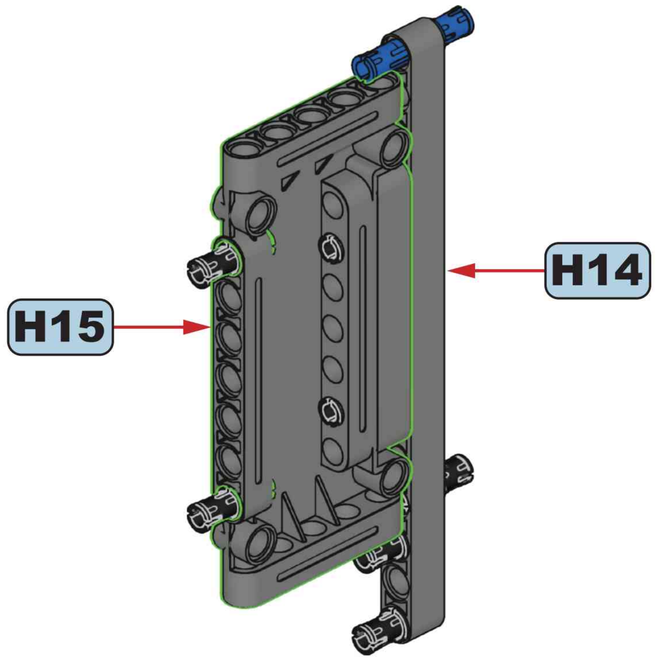

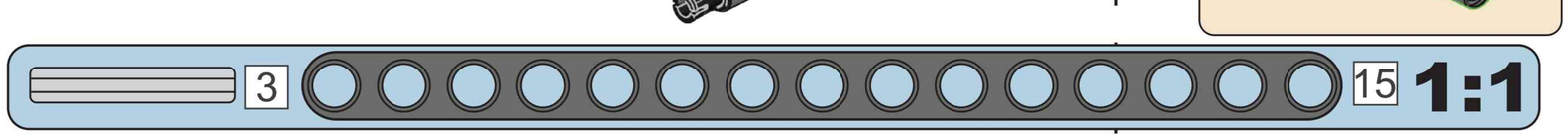

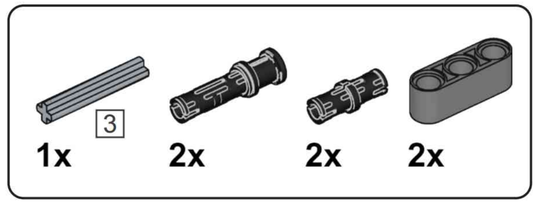

I17

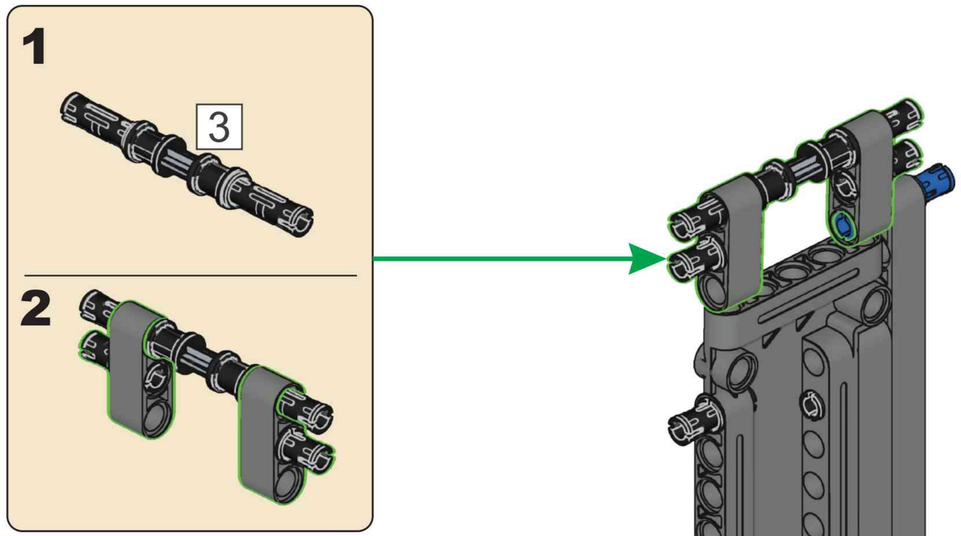

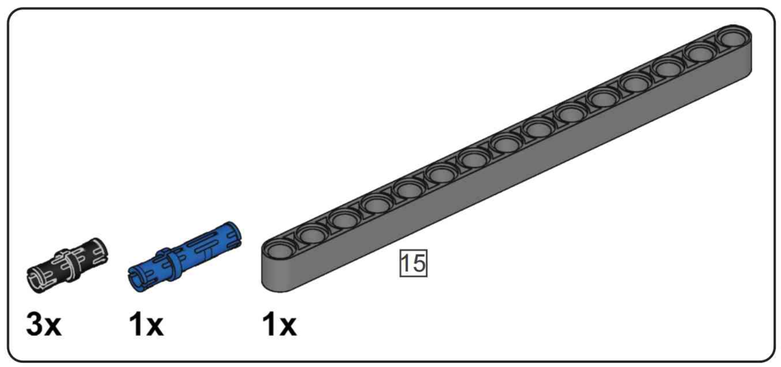

I18

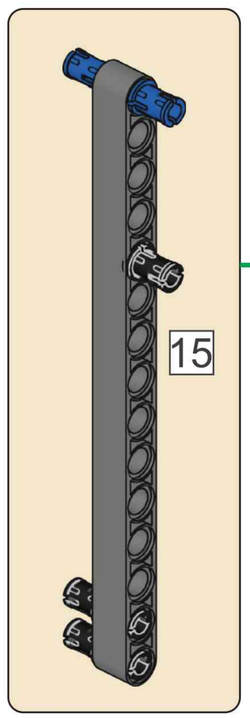

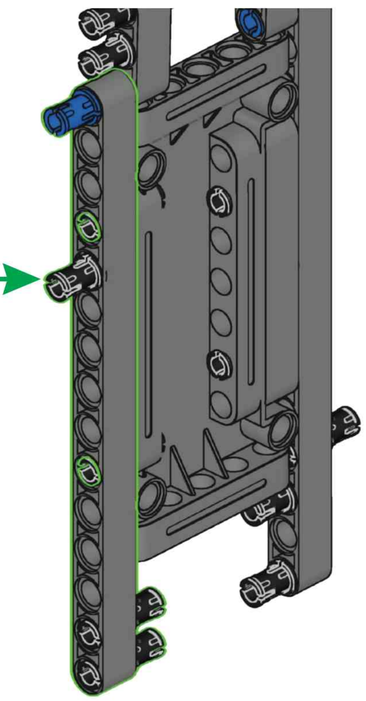

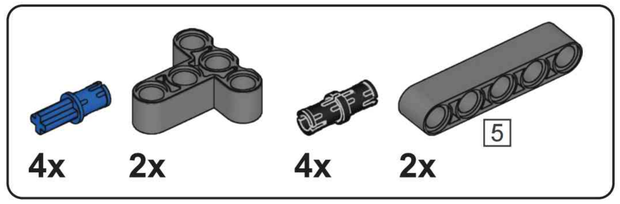

I19

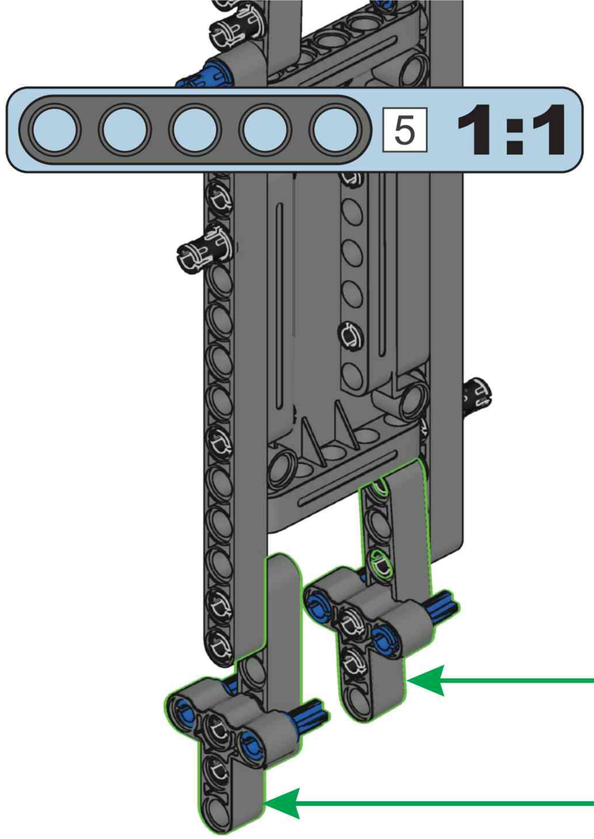

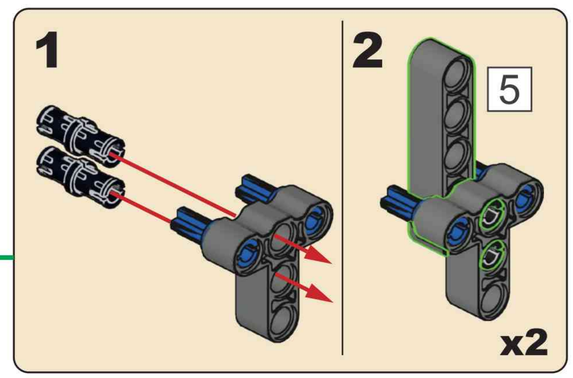

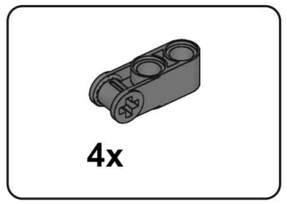

I20

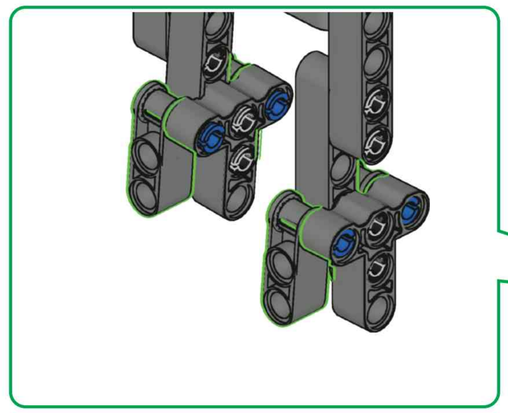

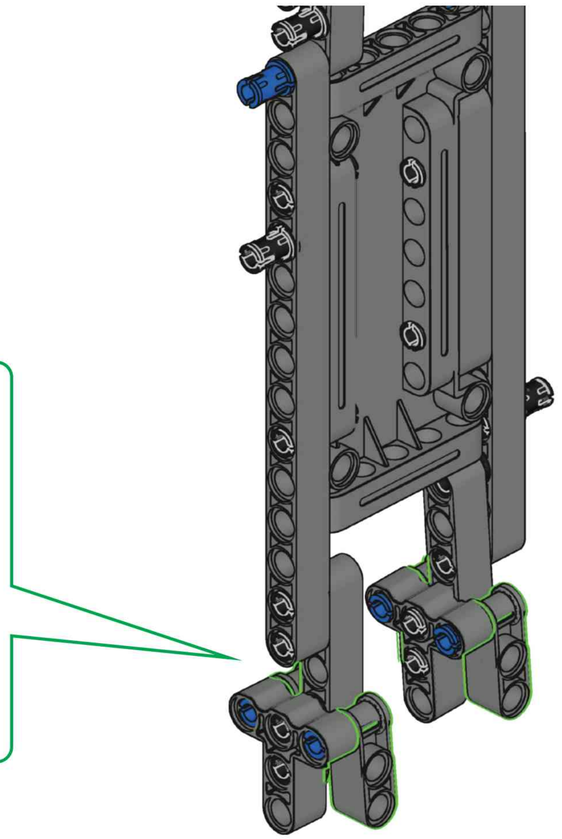

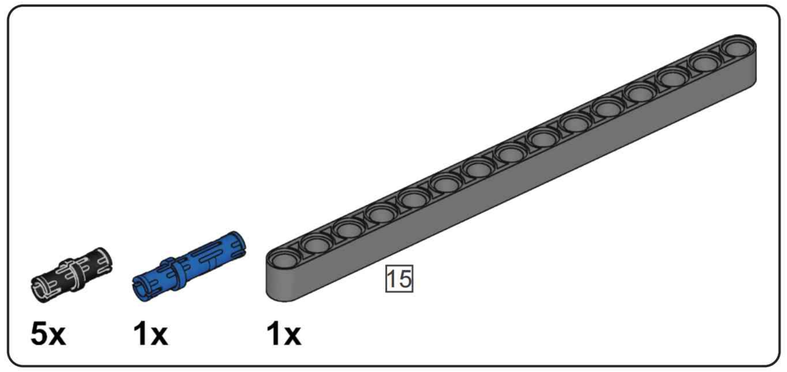

I21

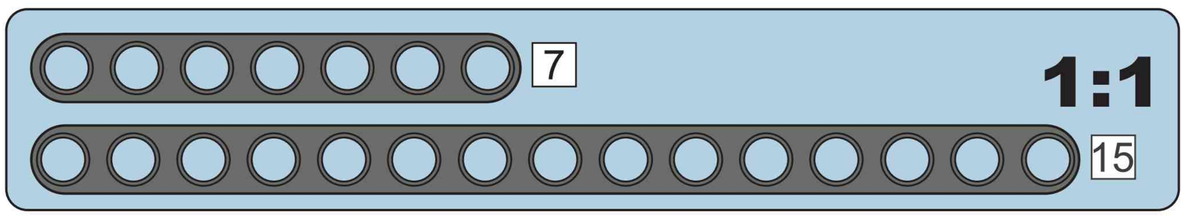

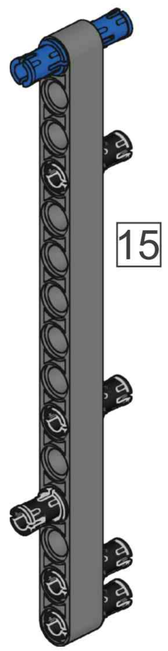

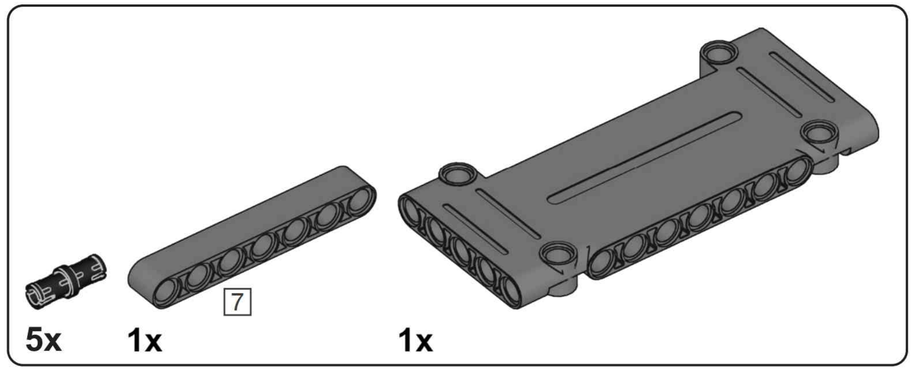

I22

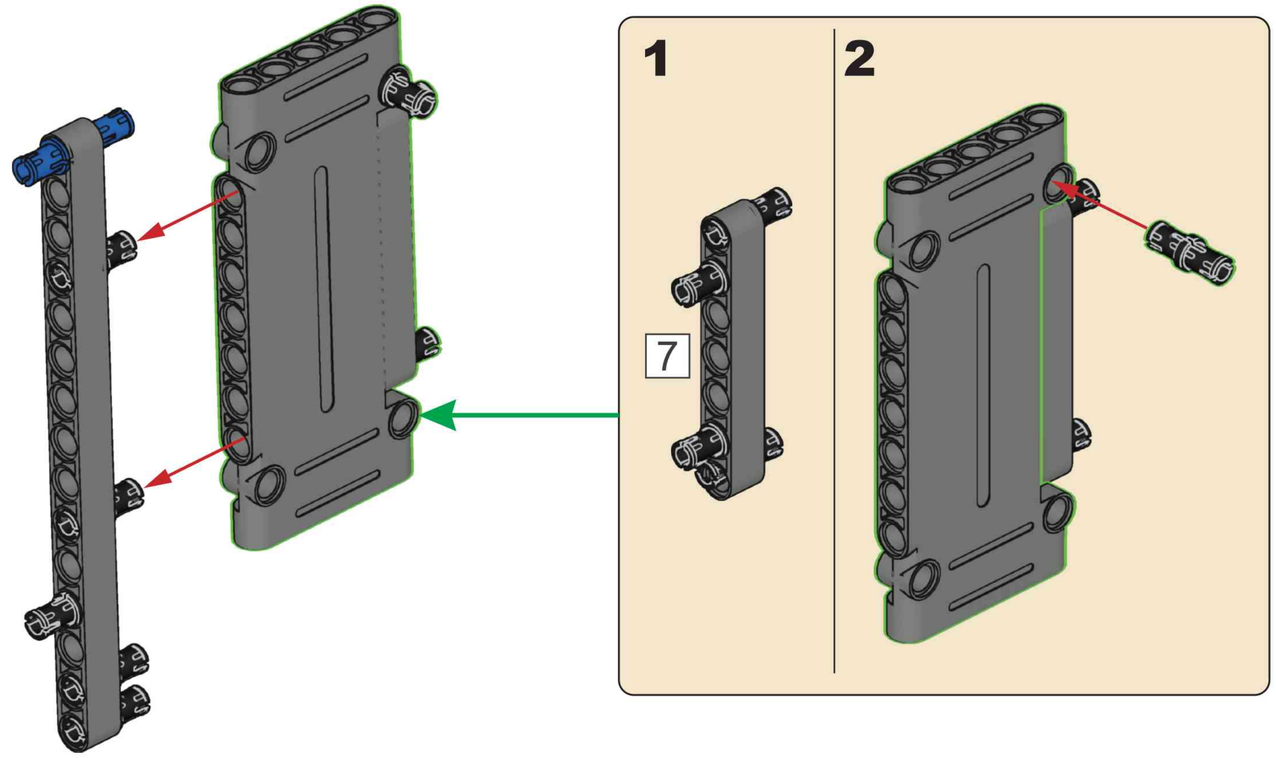

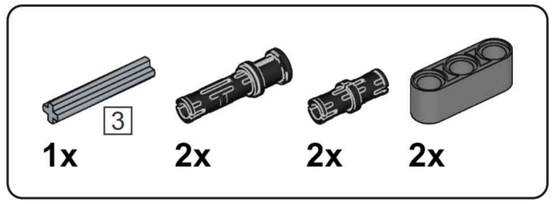

I23

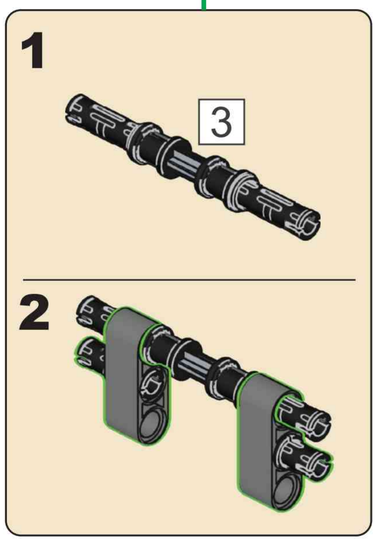

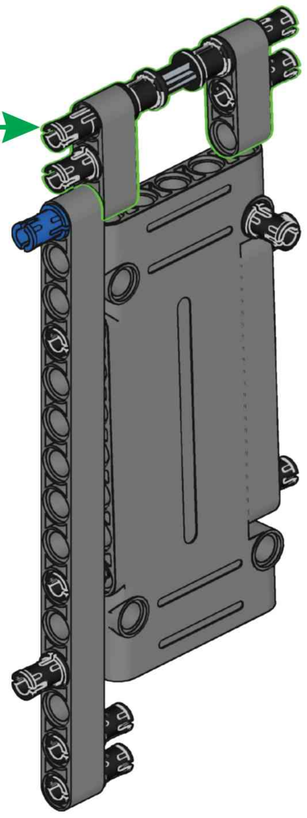

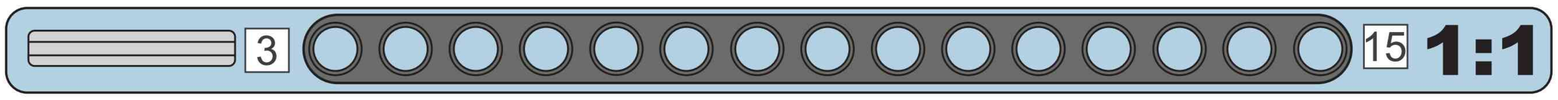

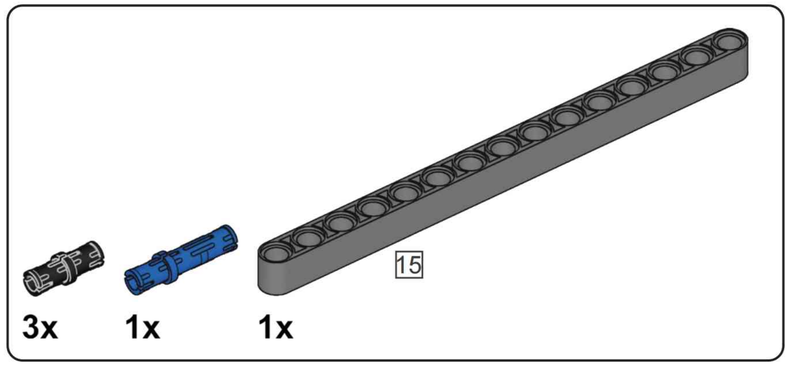

I24

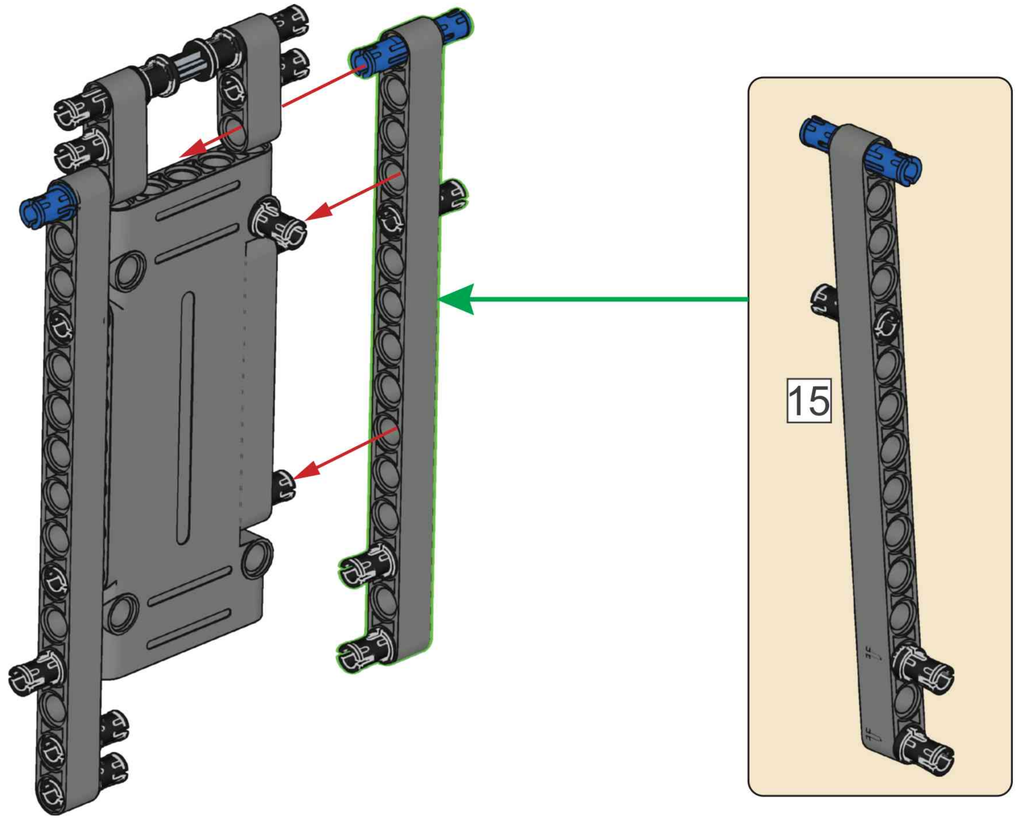

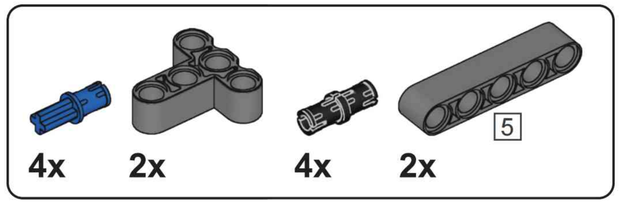

I25

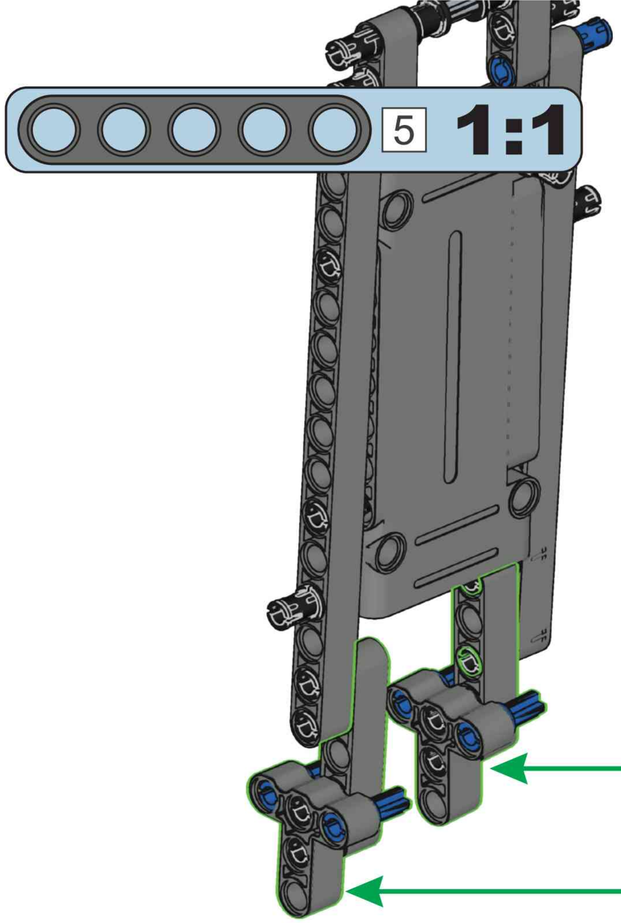

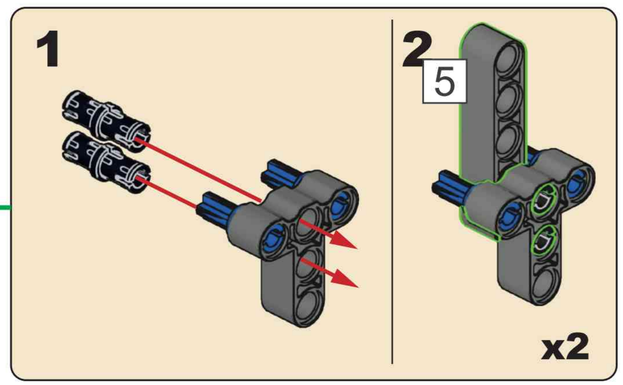

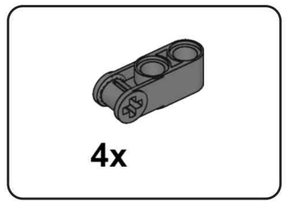

I26

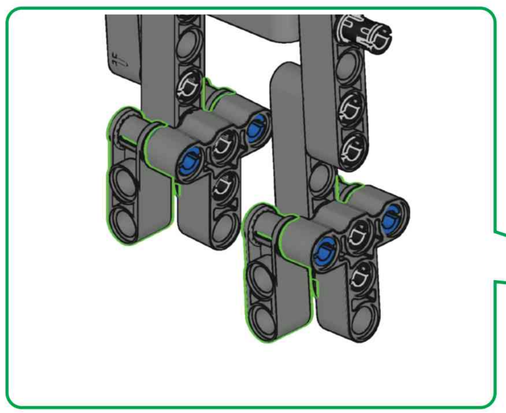

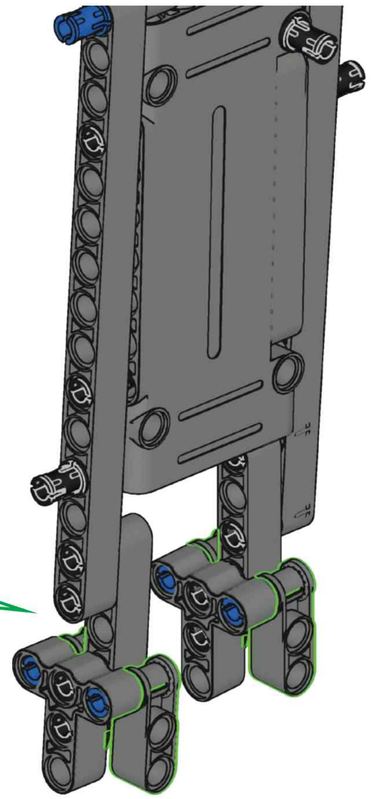

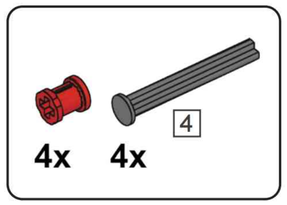



I27

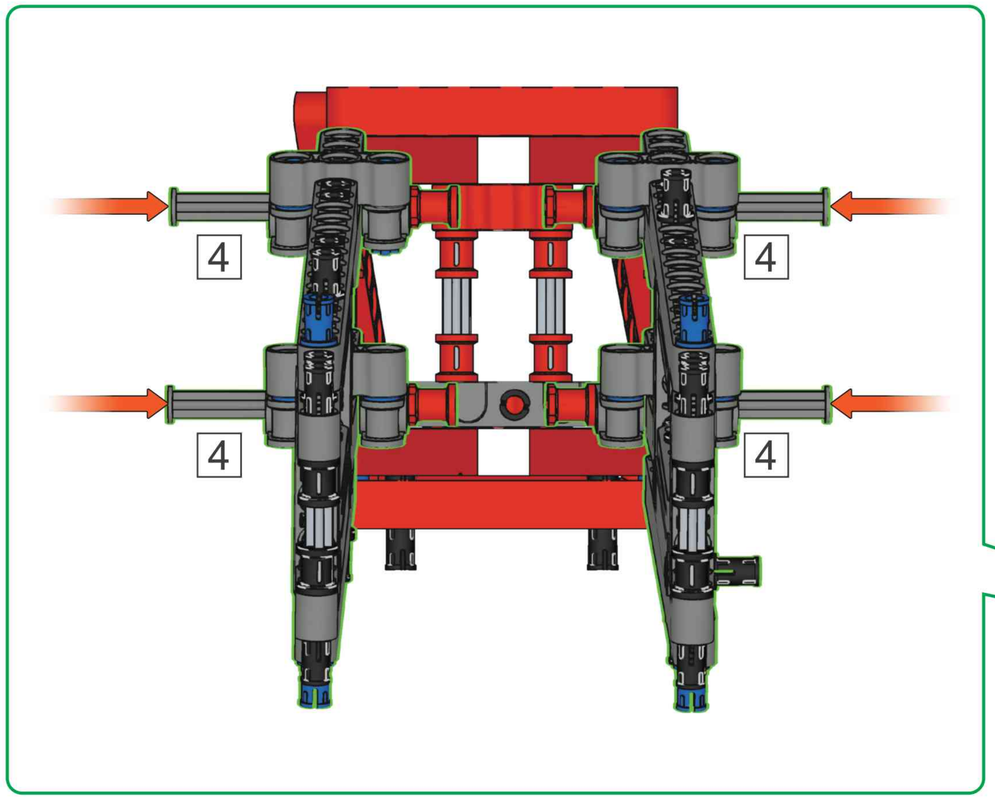

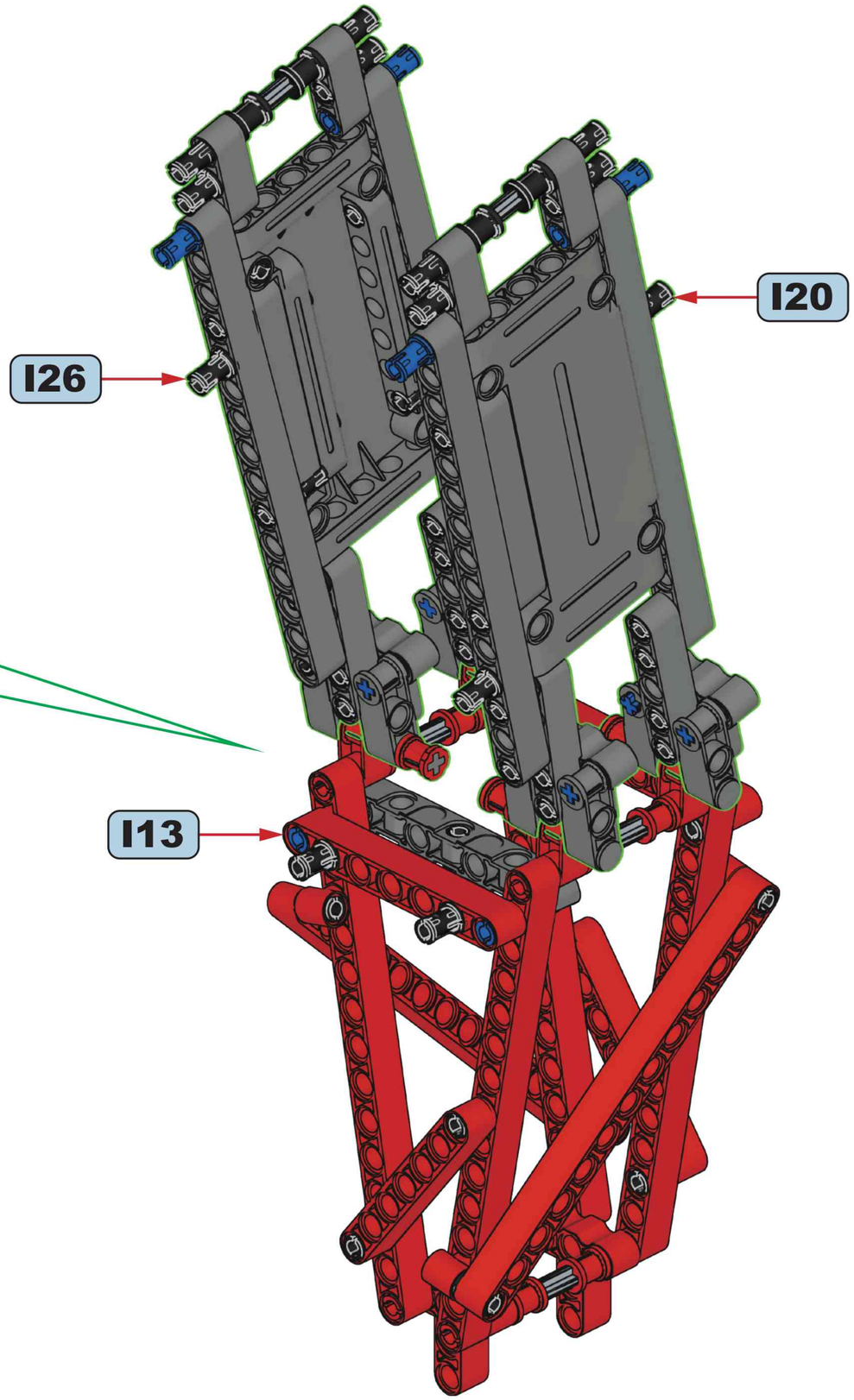

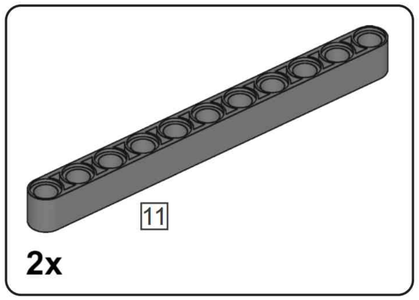

2x

I28

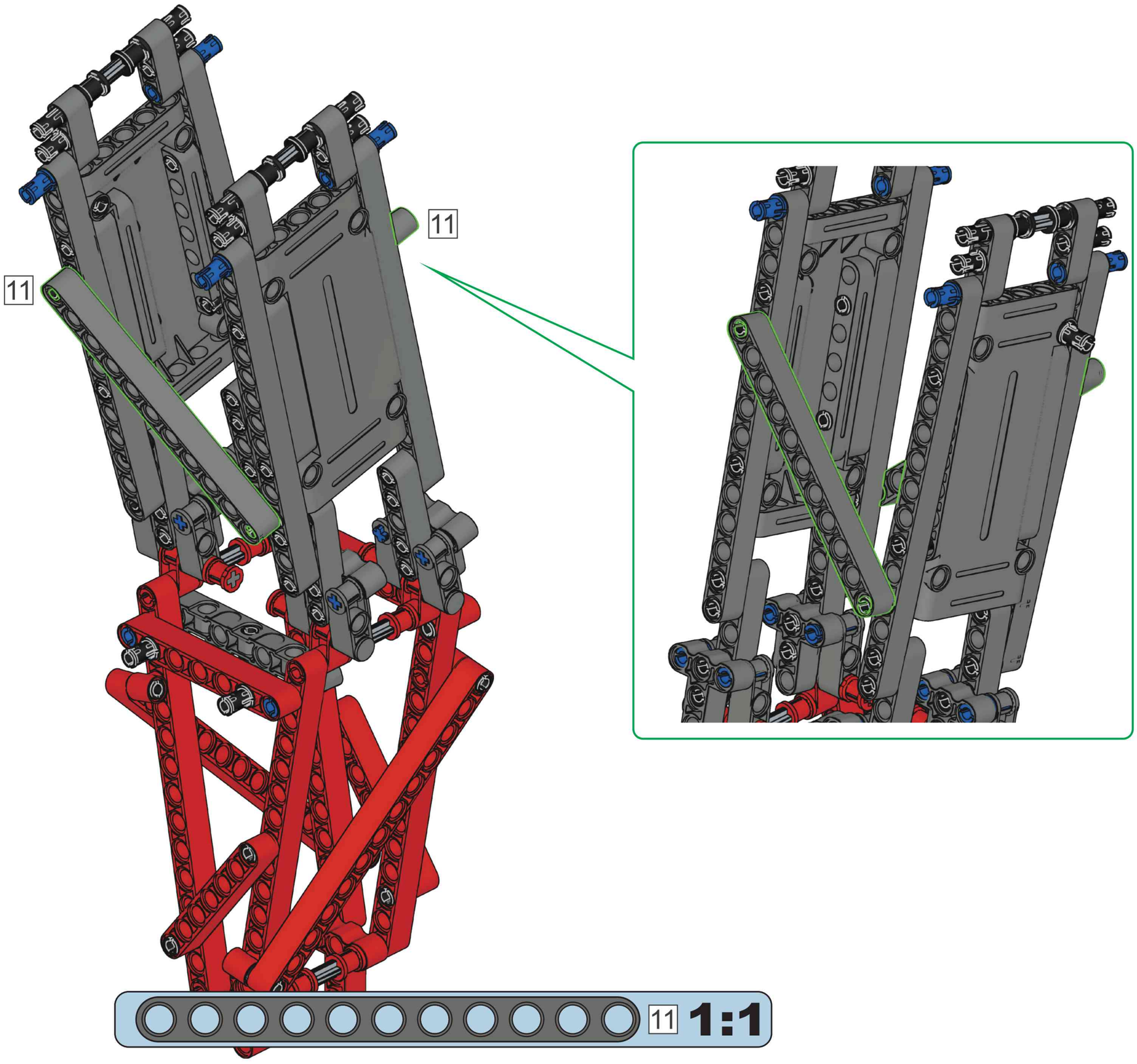

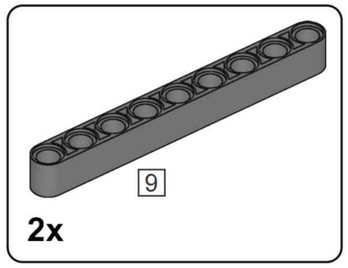

I29

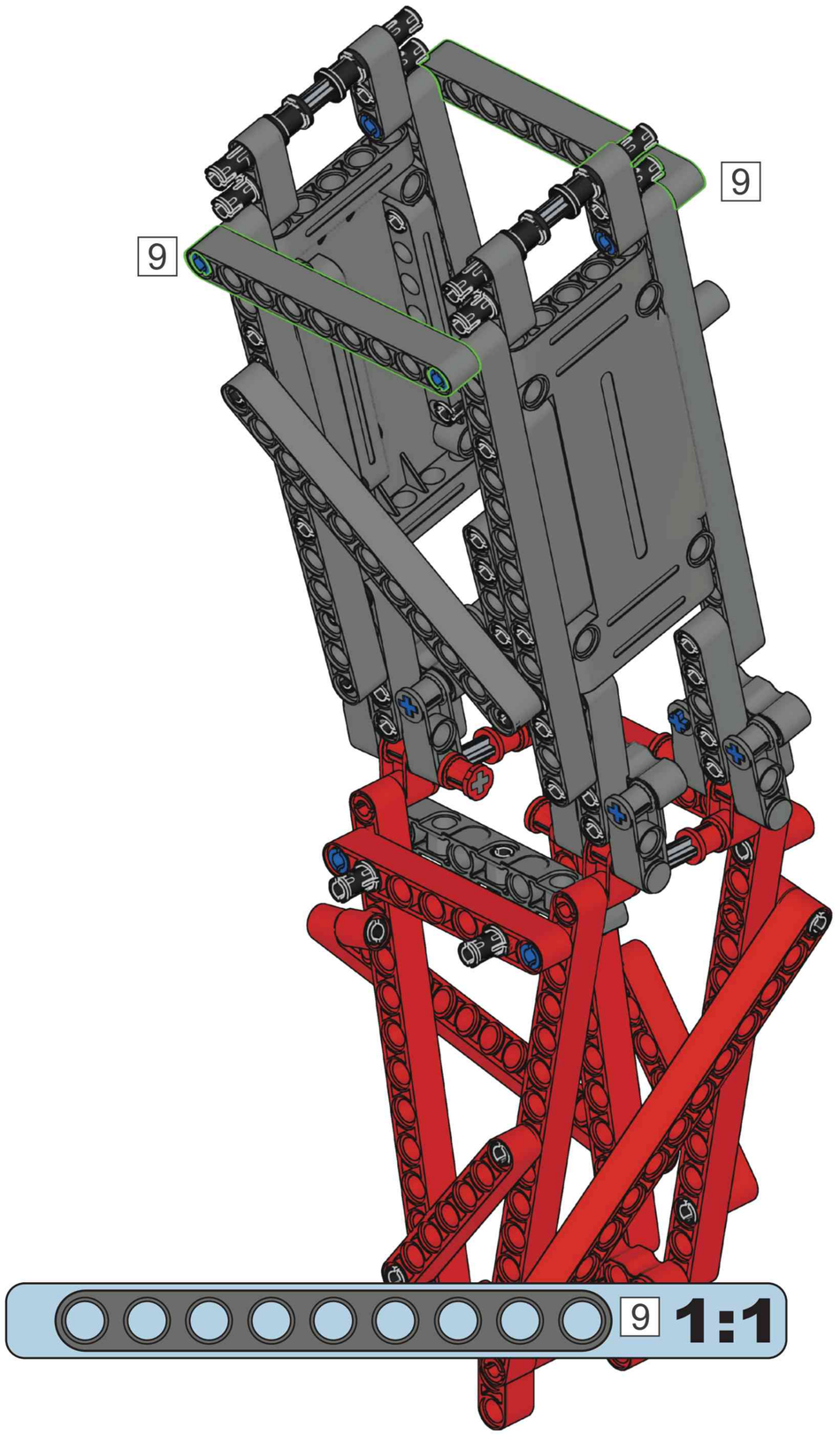

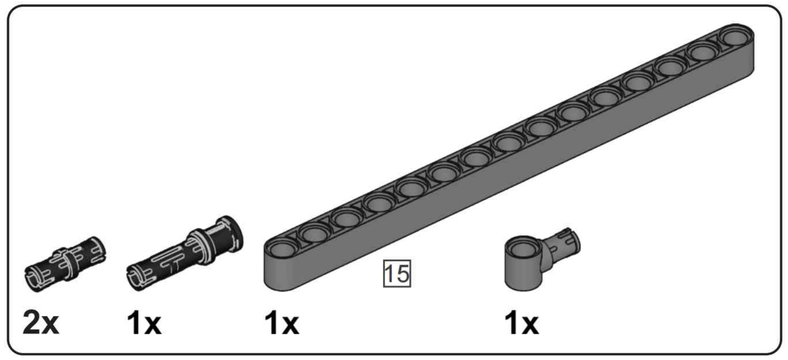

I30

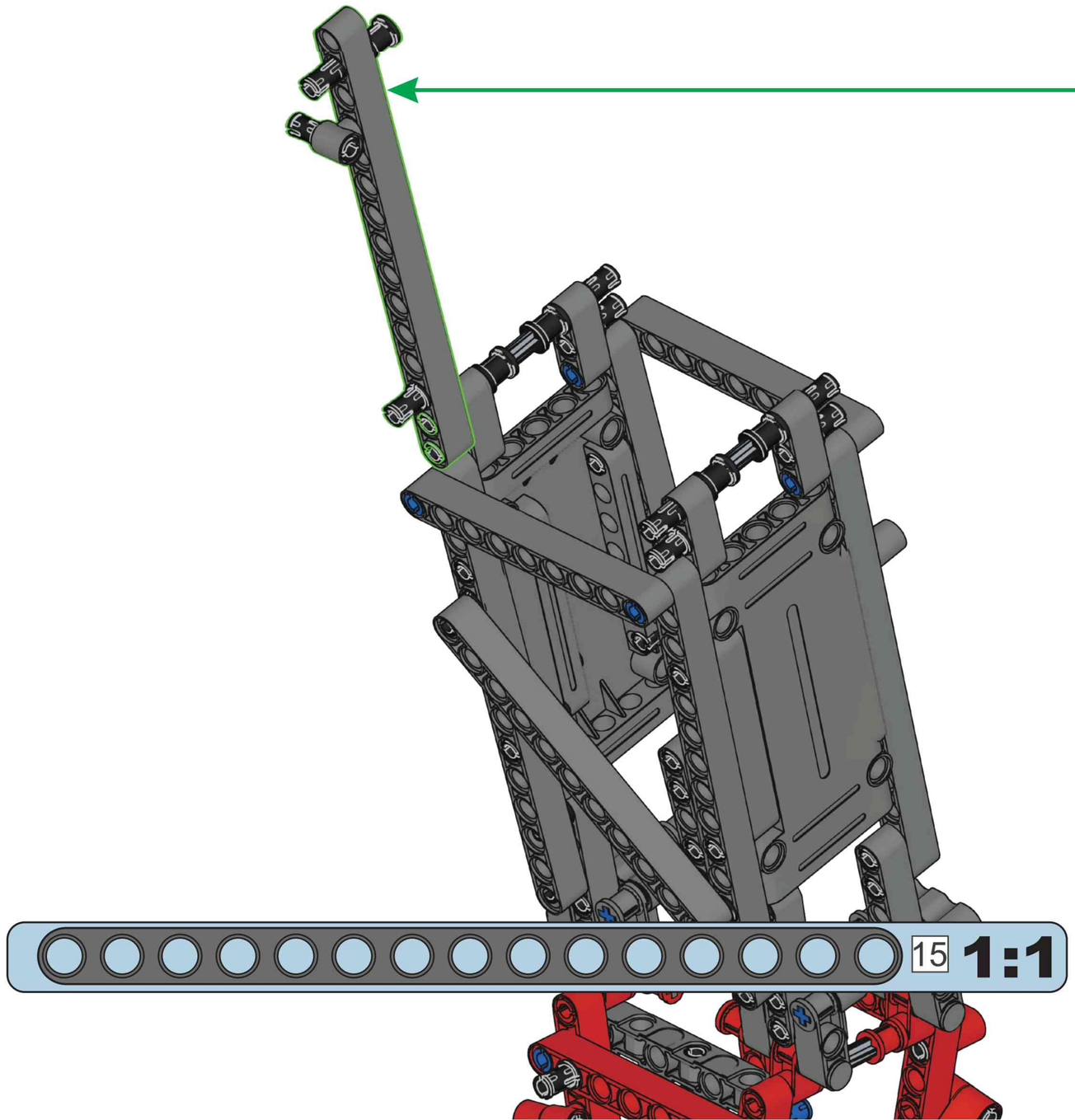

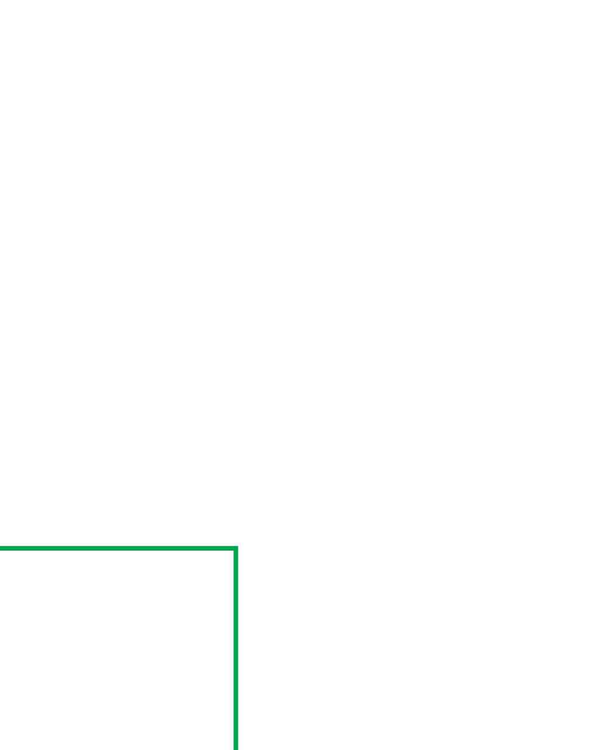

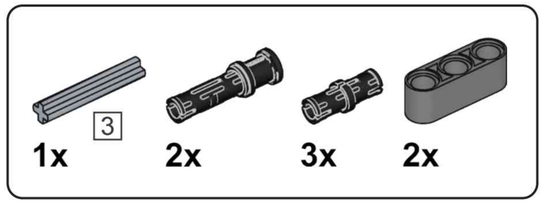

I31

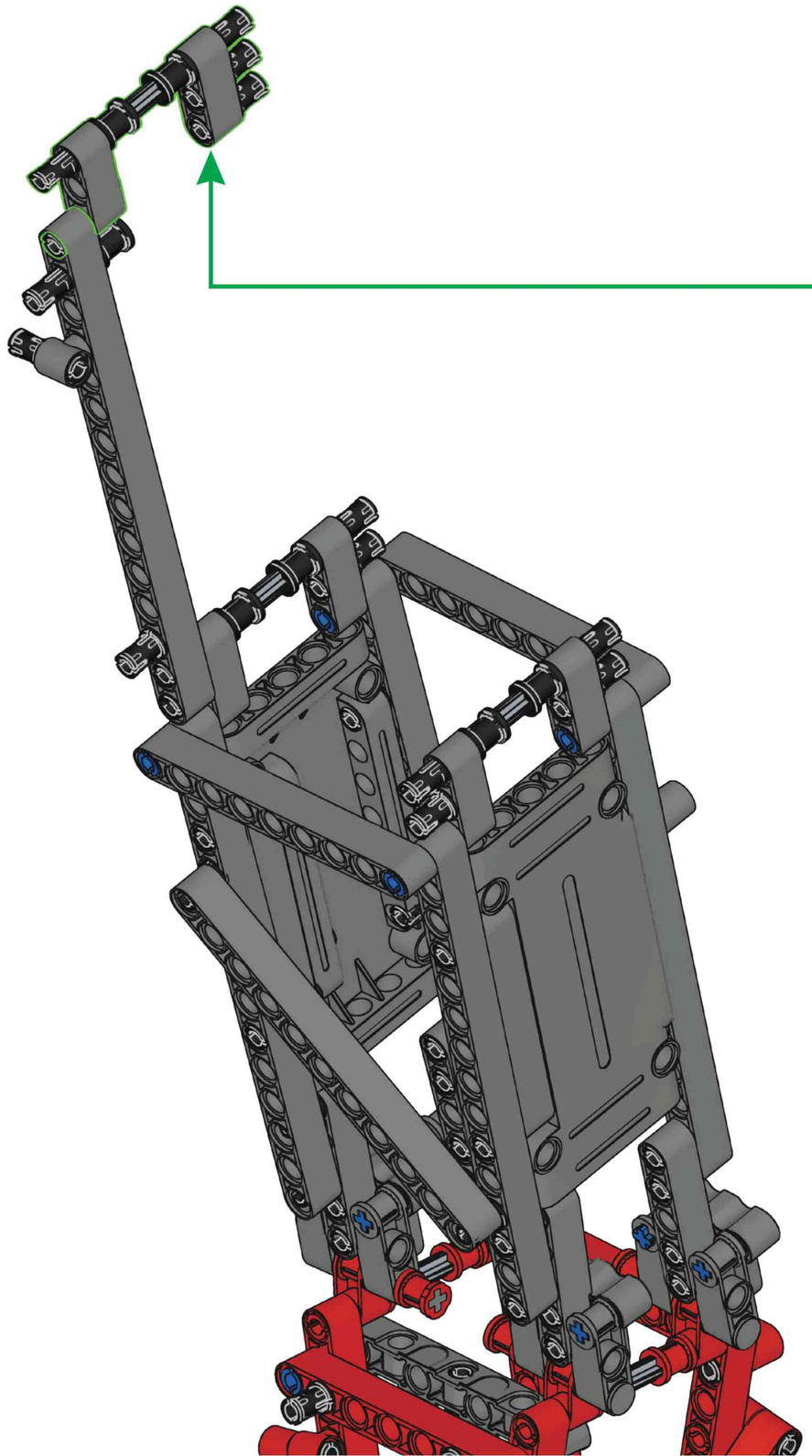

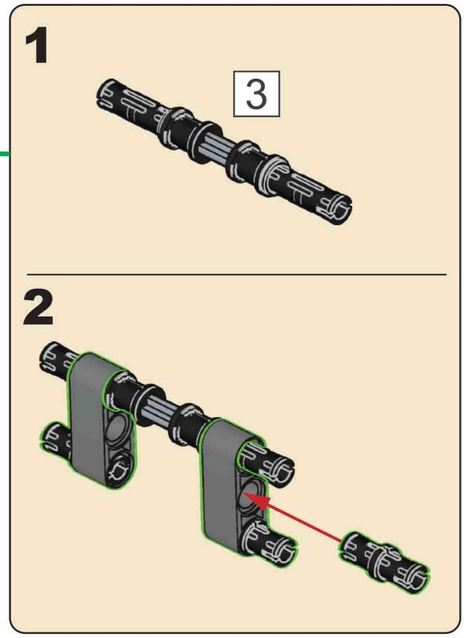

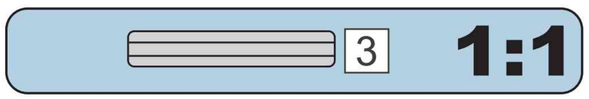

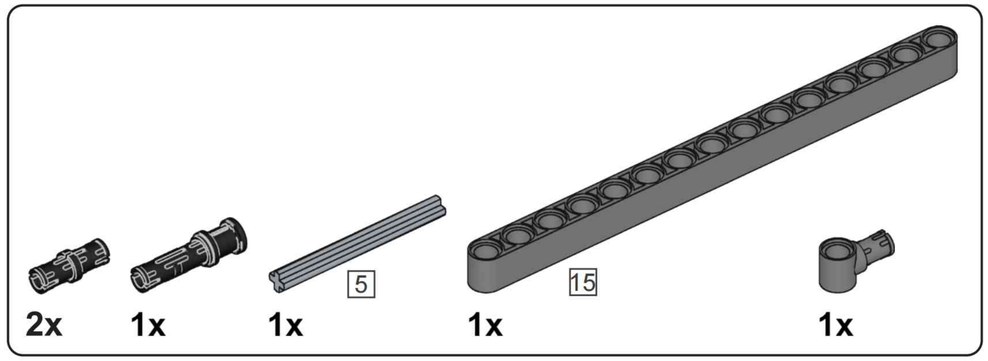

I32

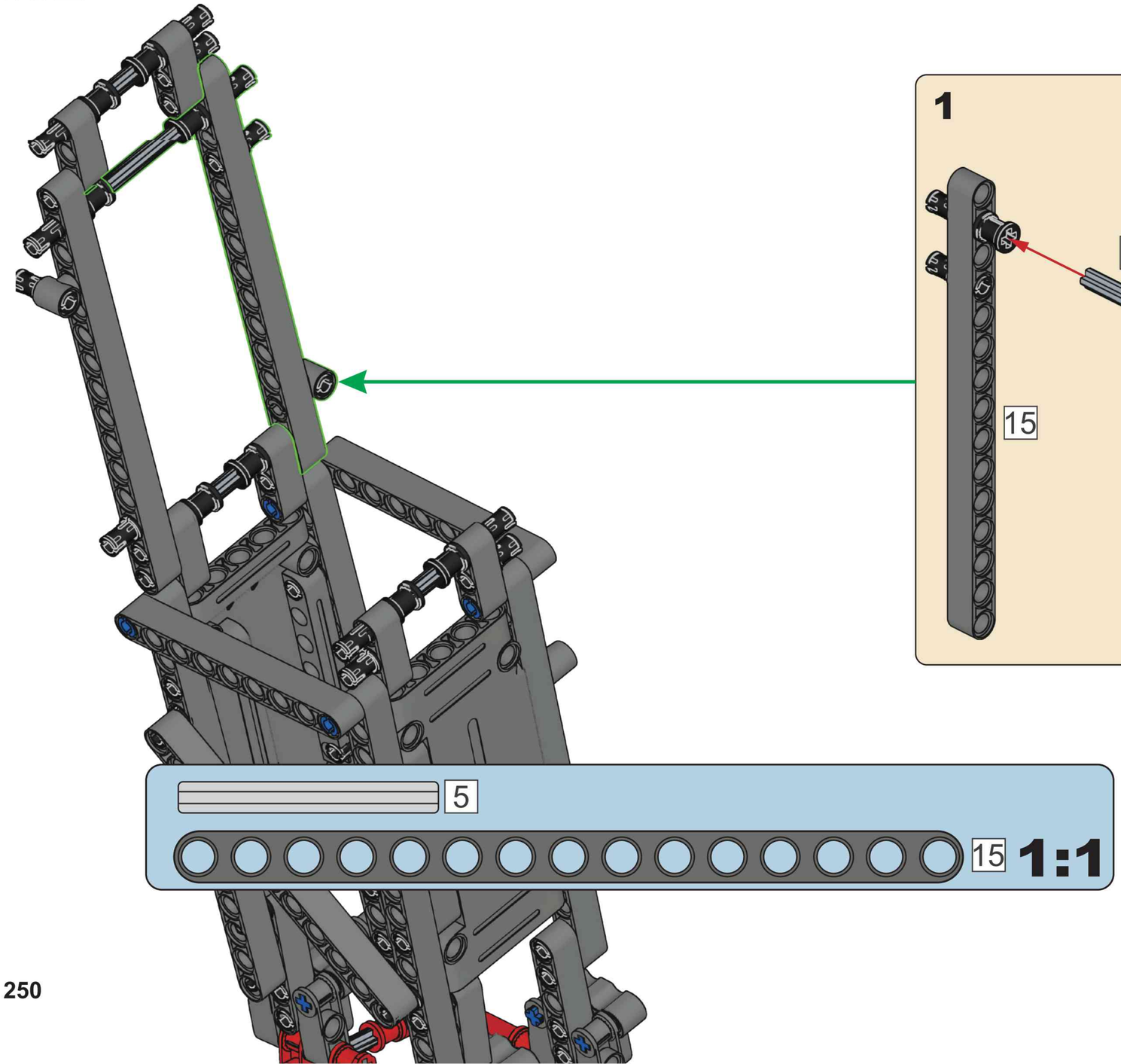

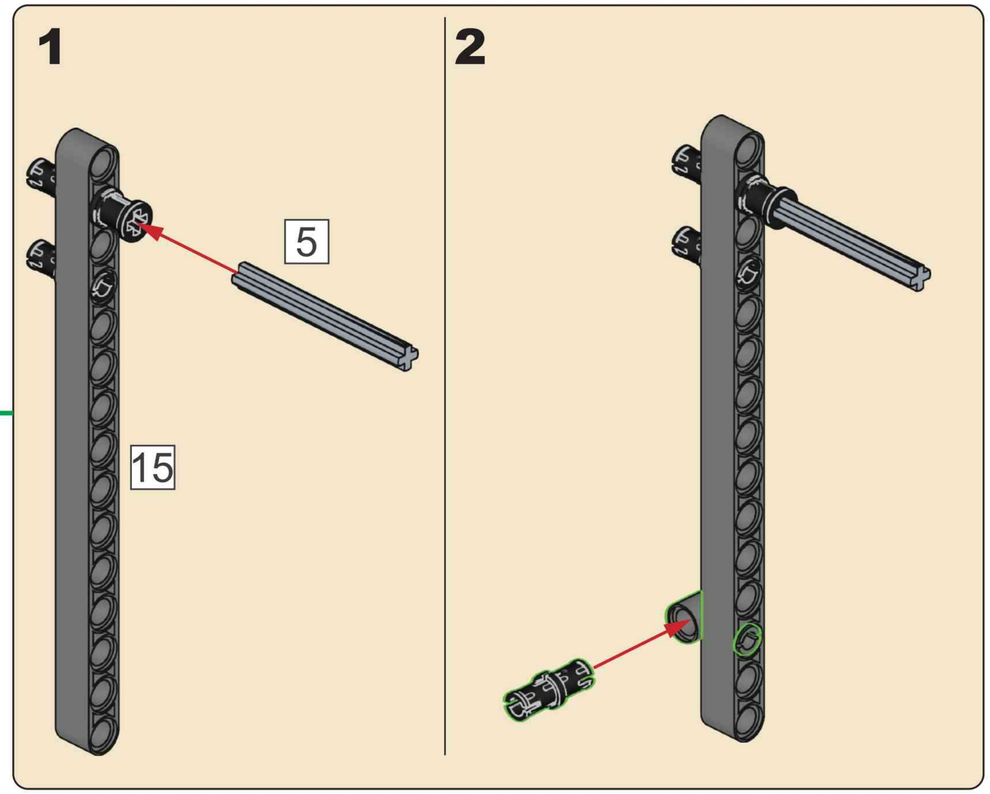

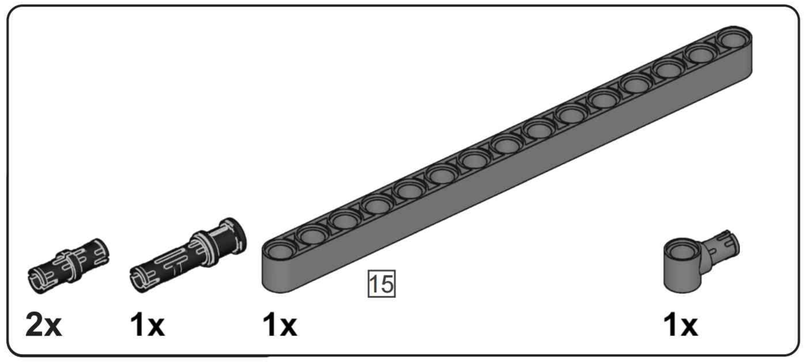

I33

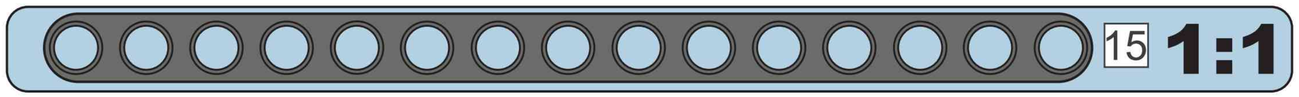

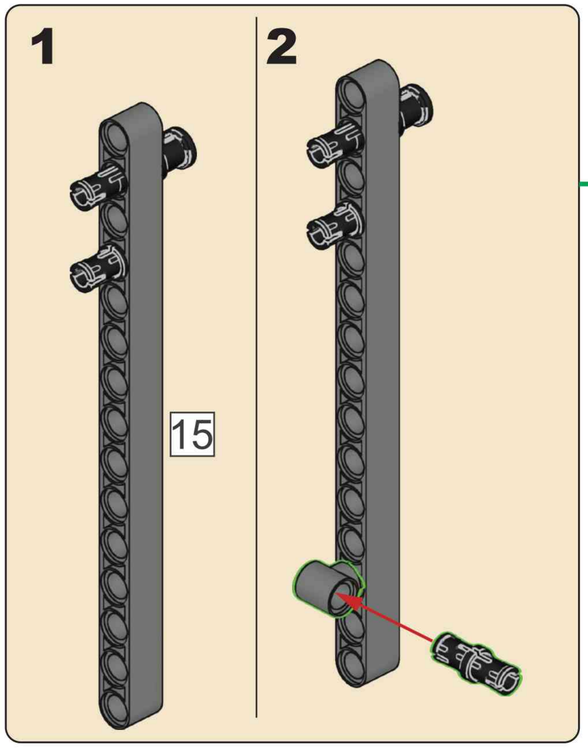

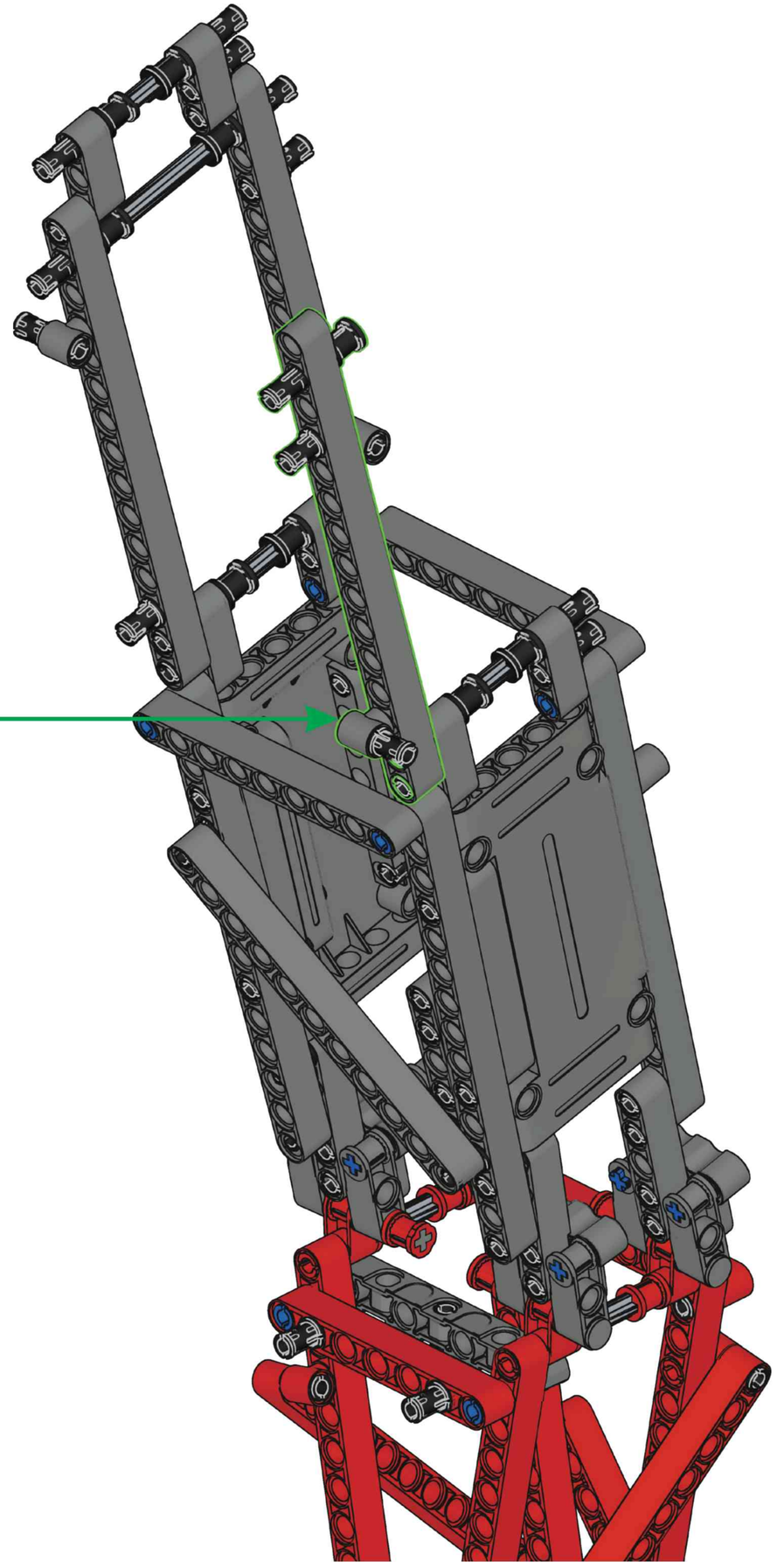

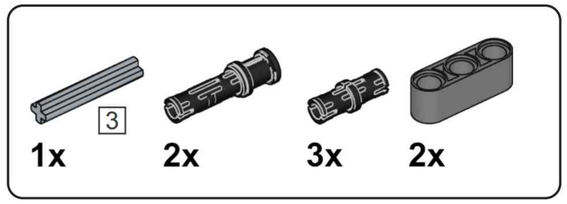

I34

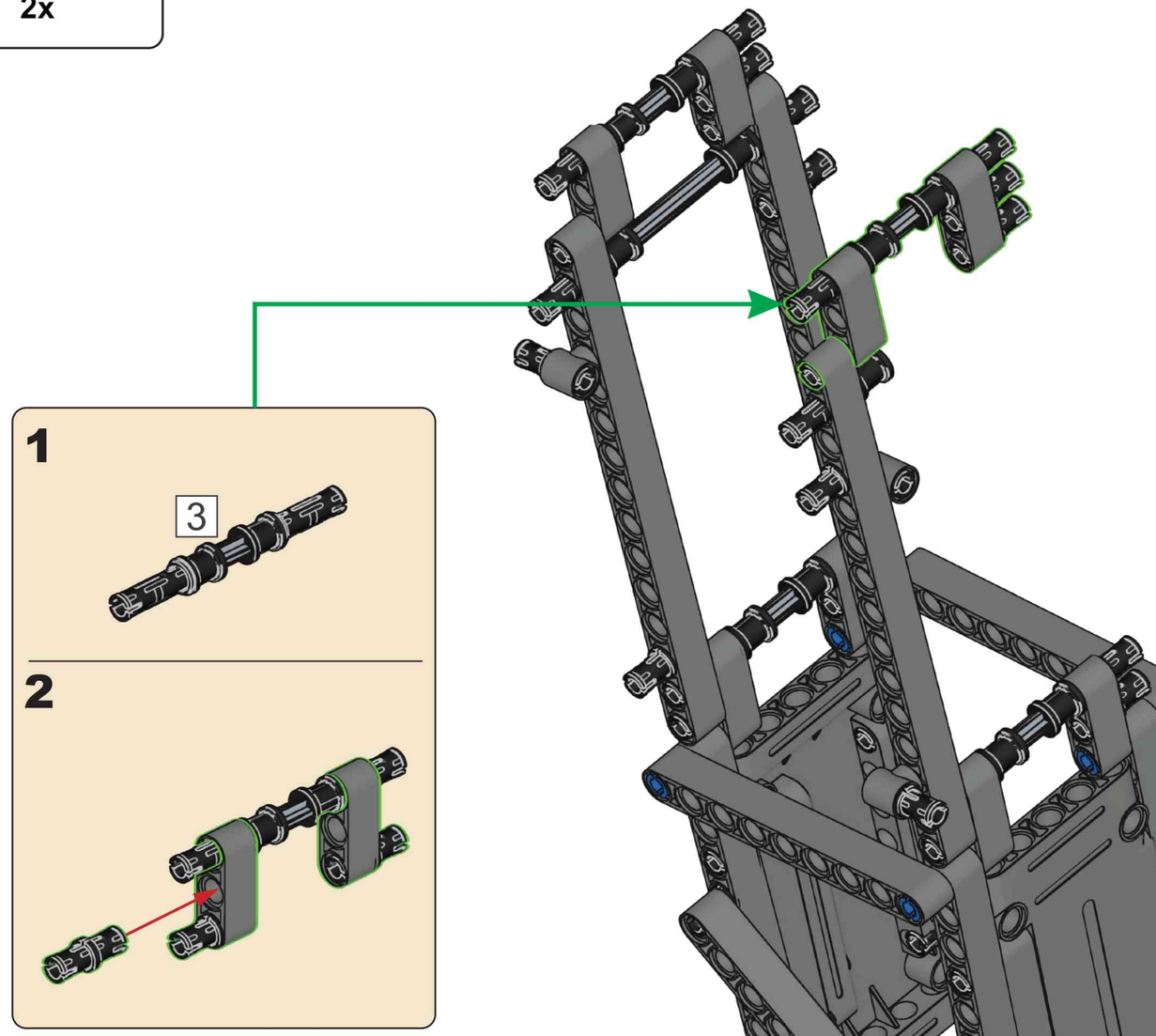

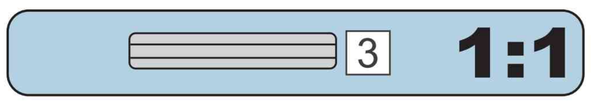

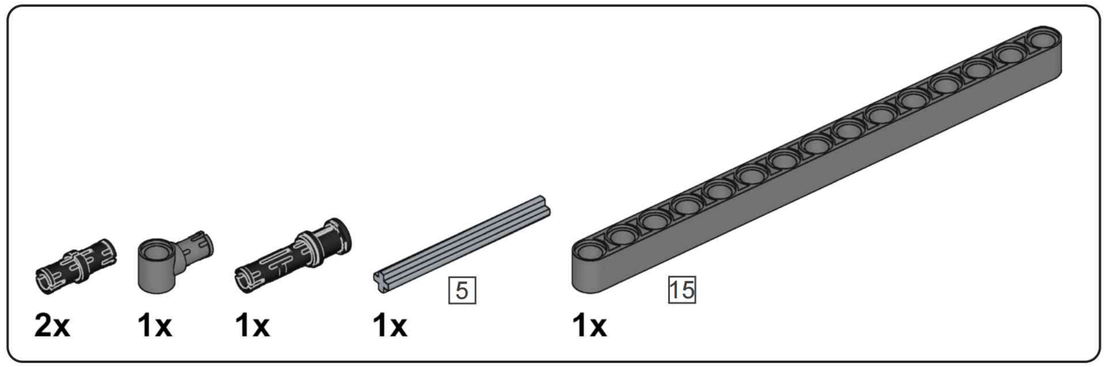

I35

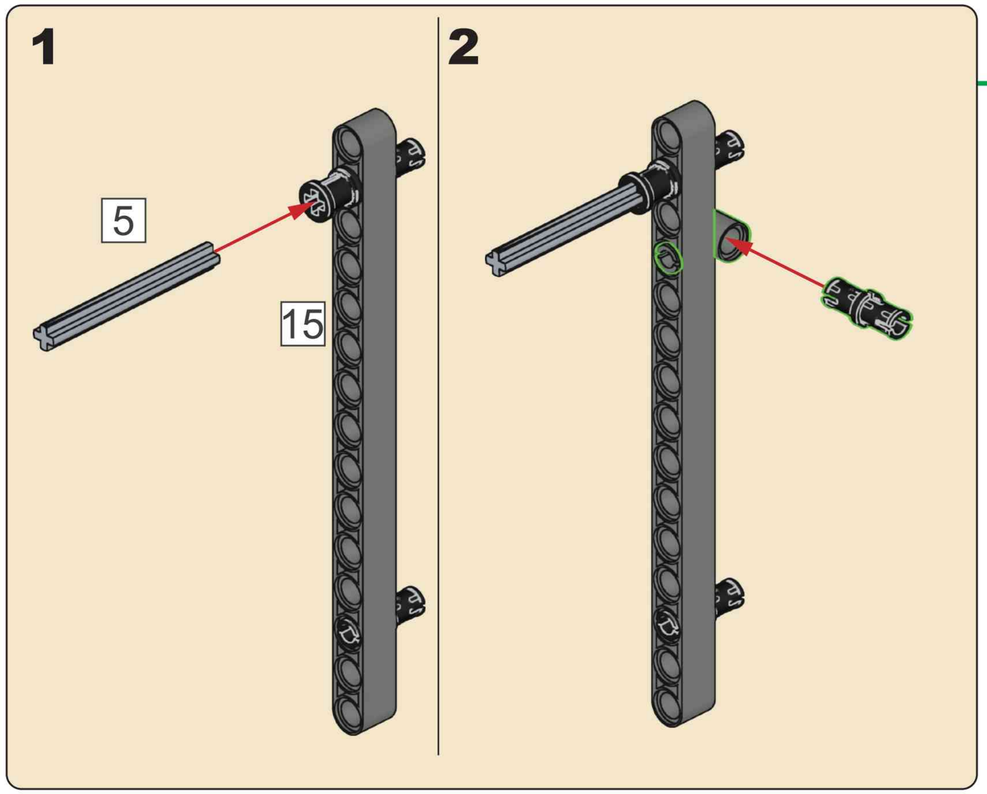

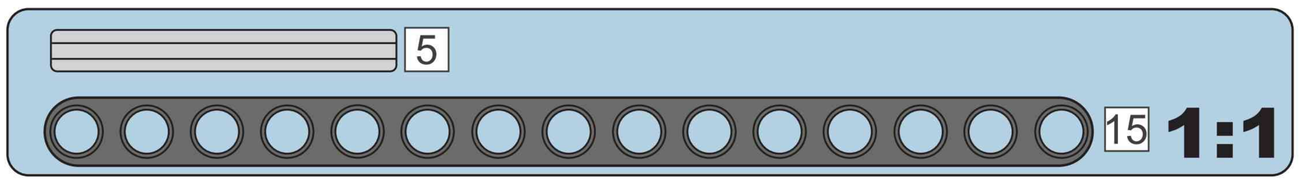

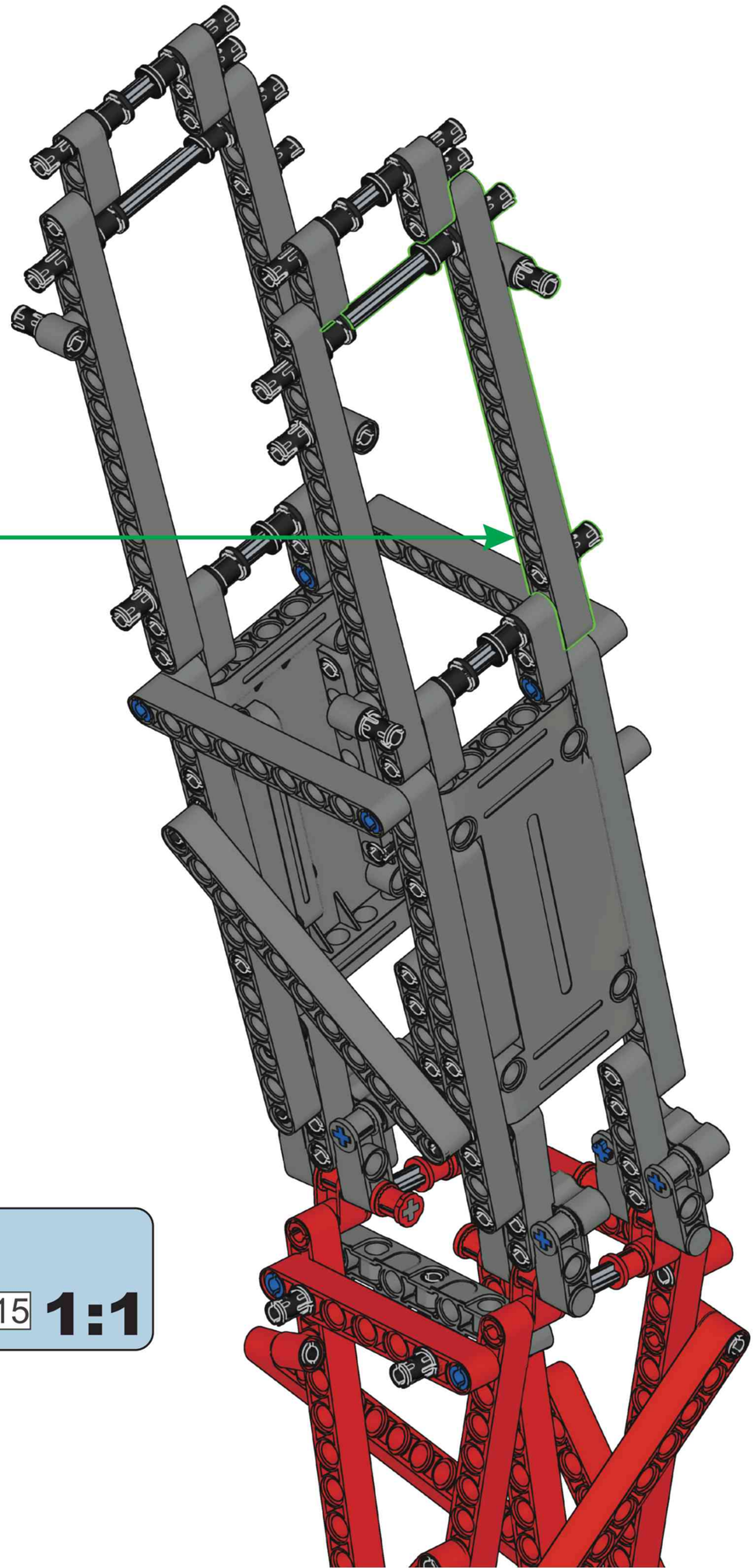

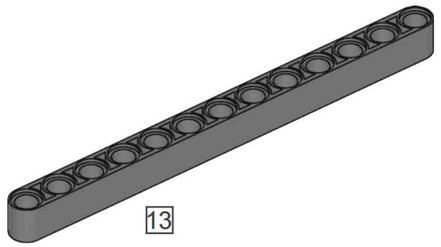

2x

I36

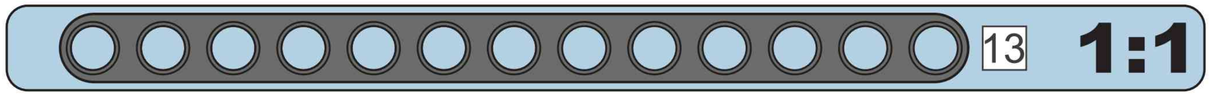

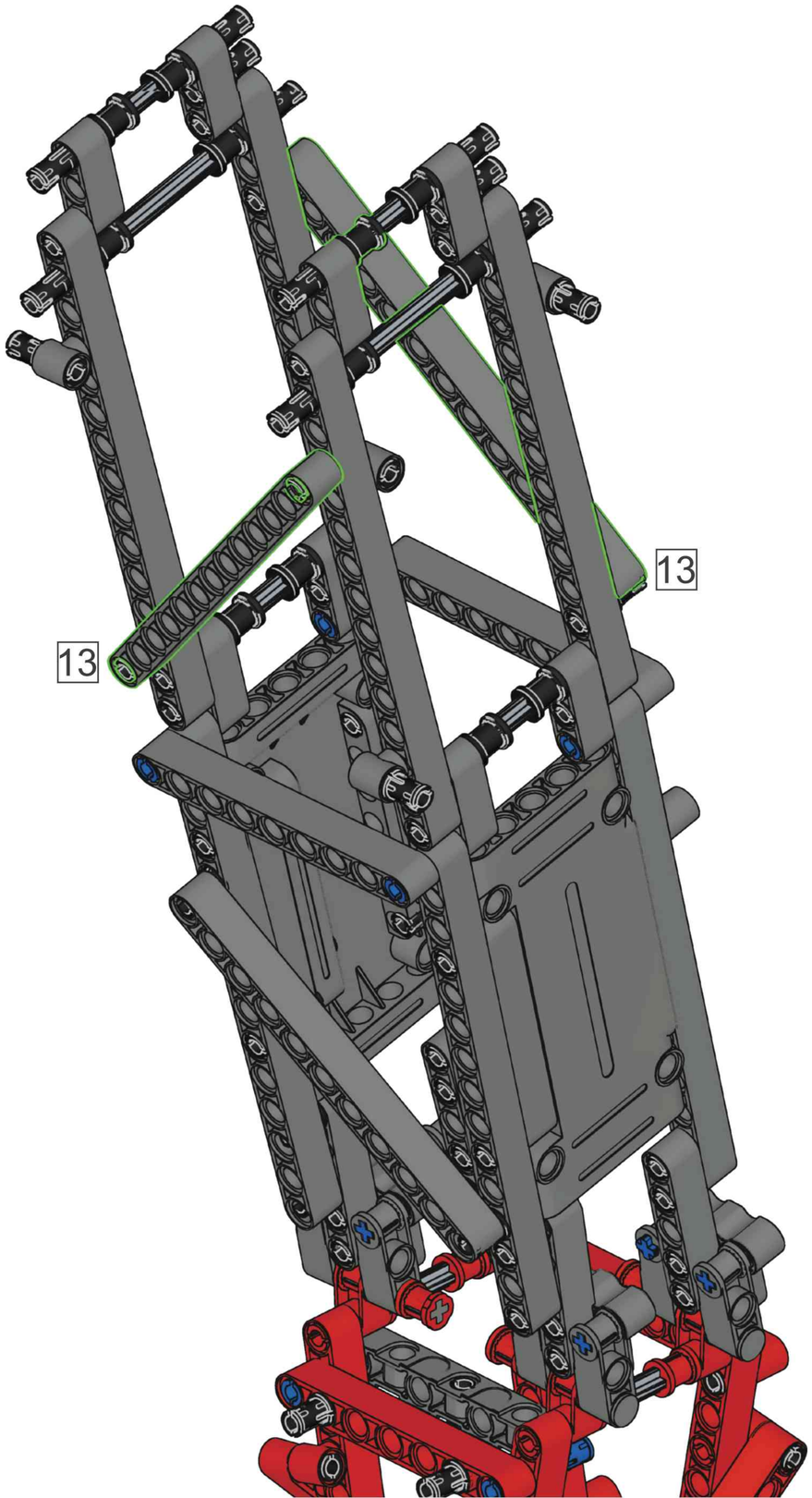

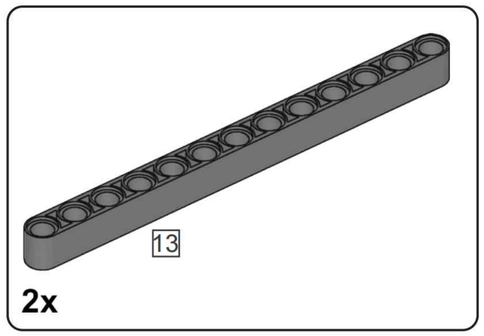

2x

I37

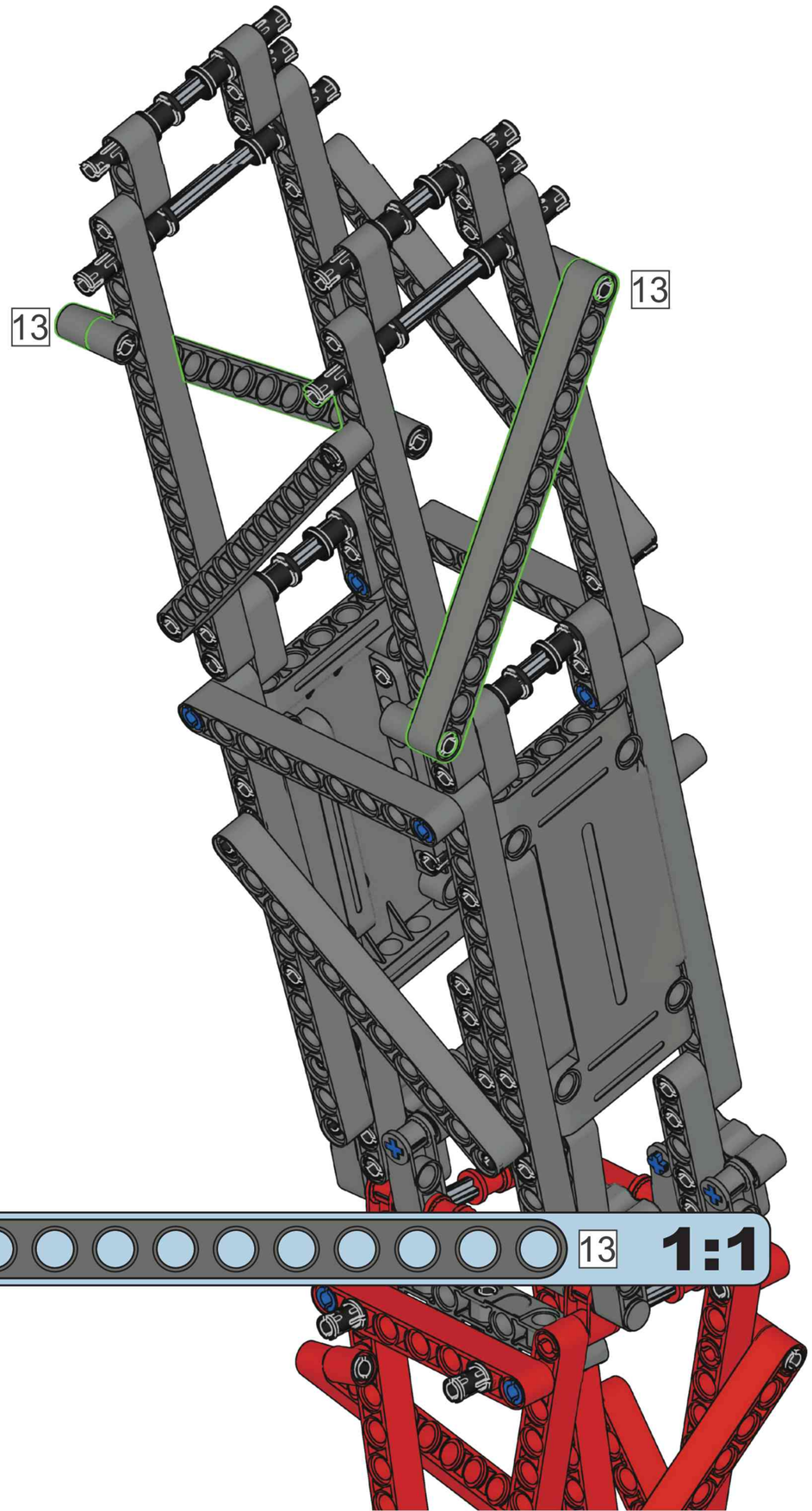

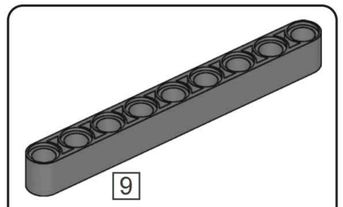

2x

138

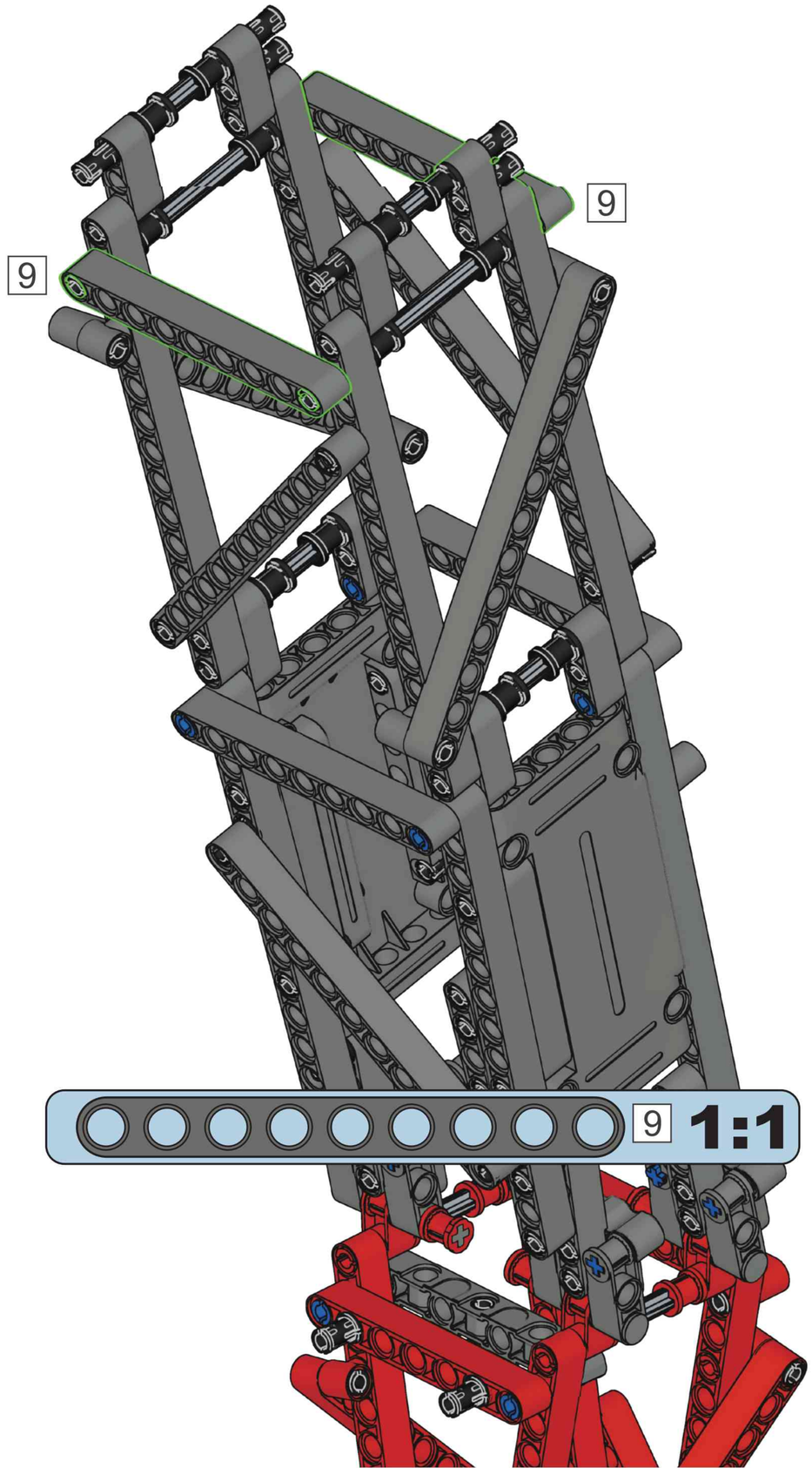

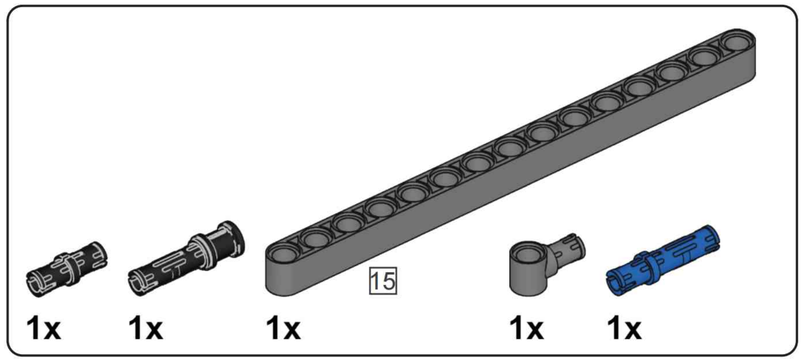

I39

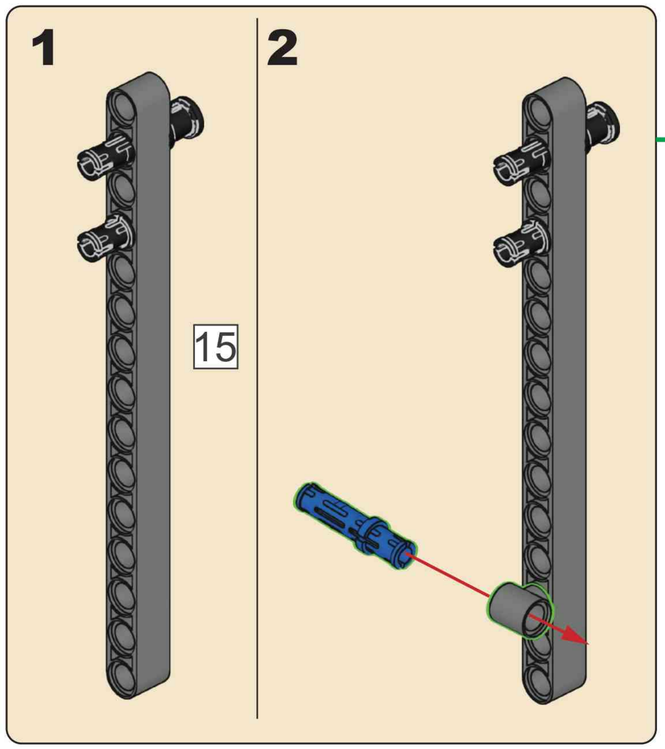

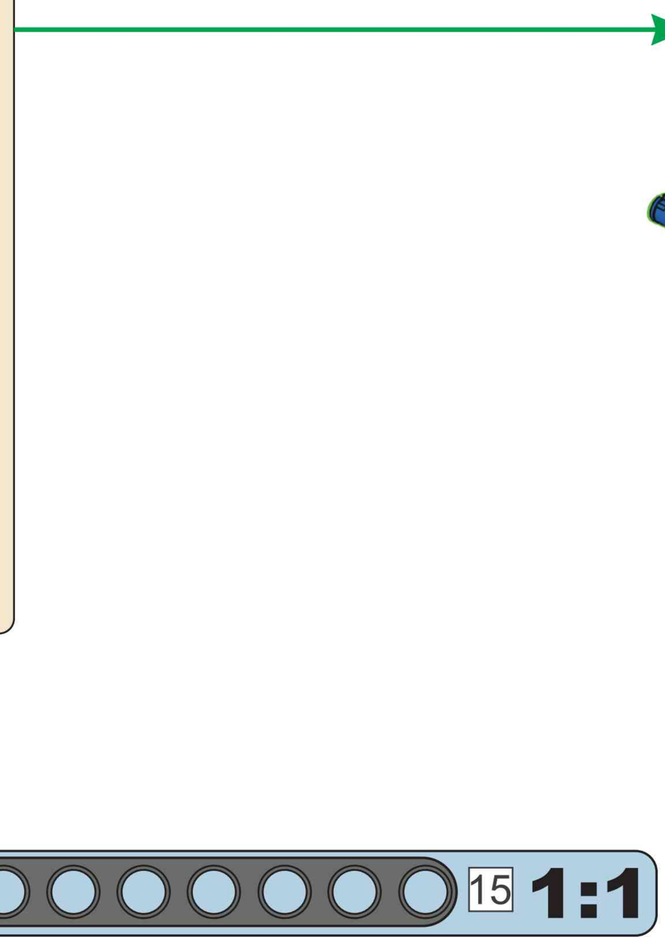

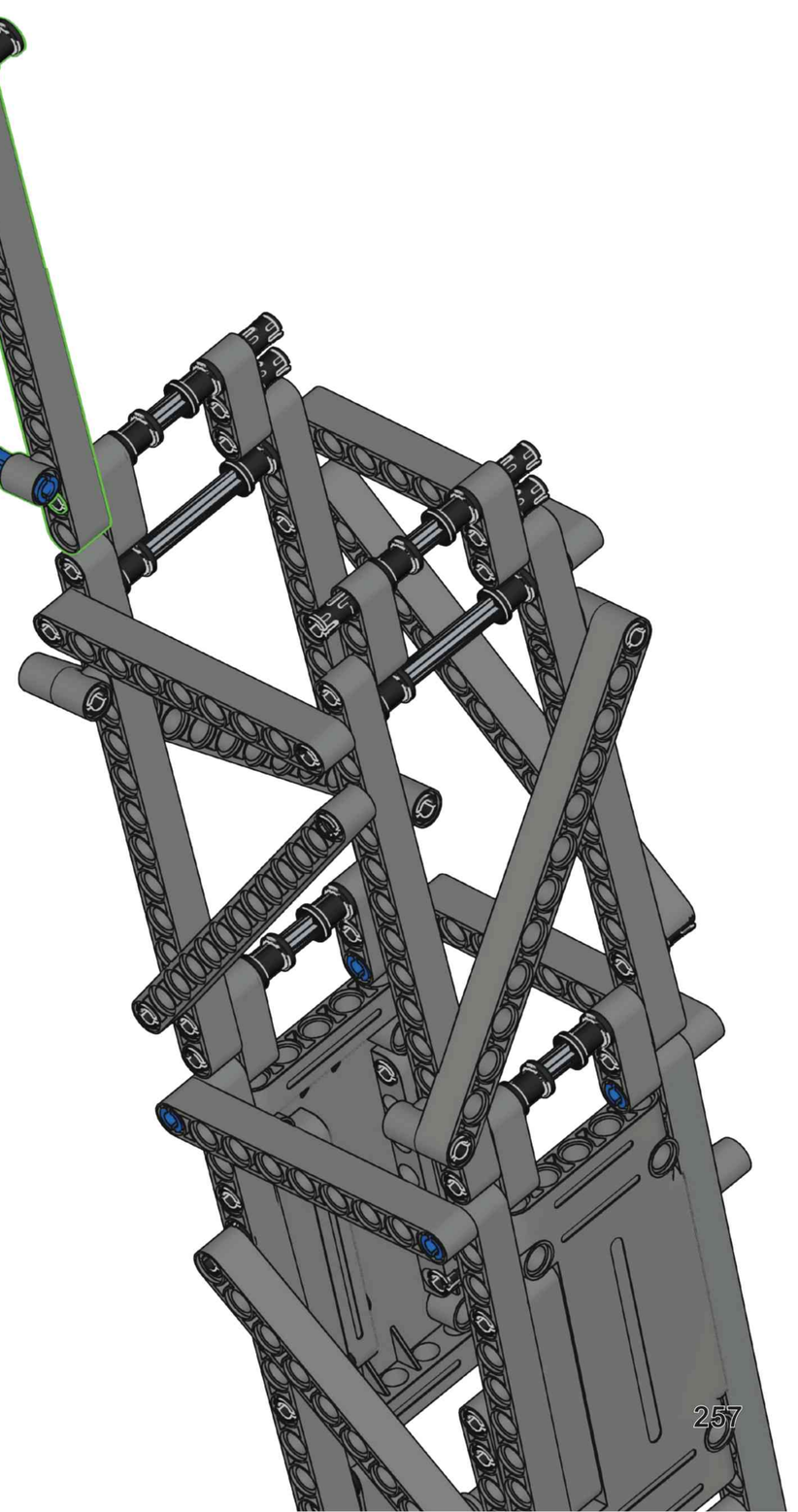

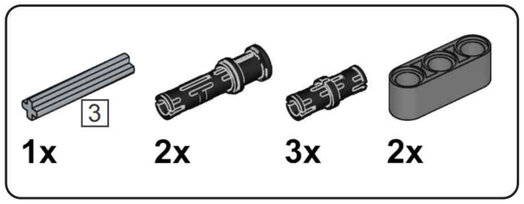

I40

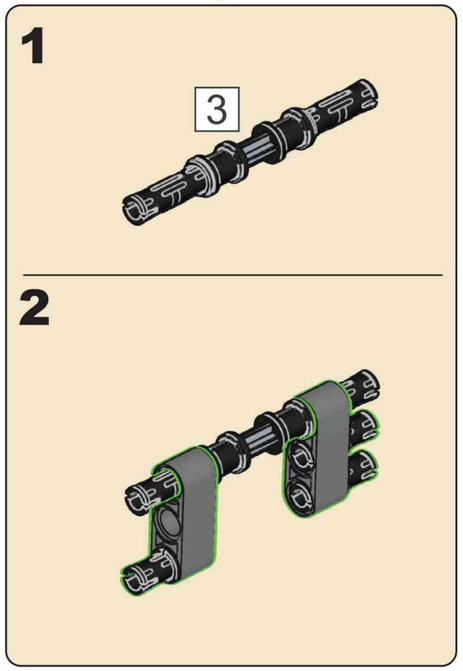

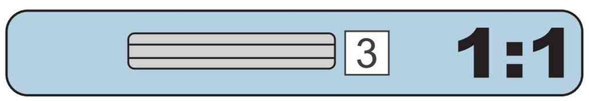



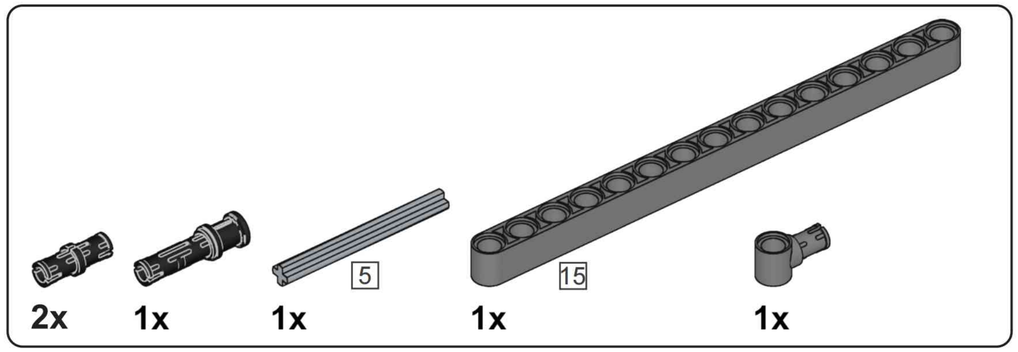

I41

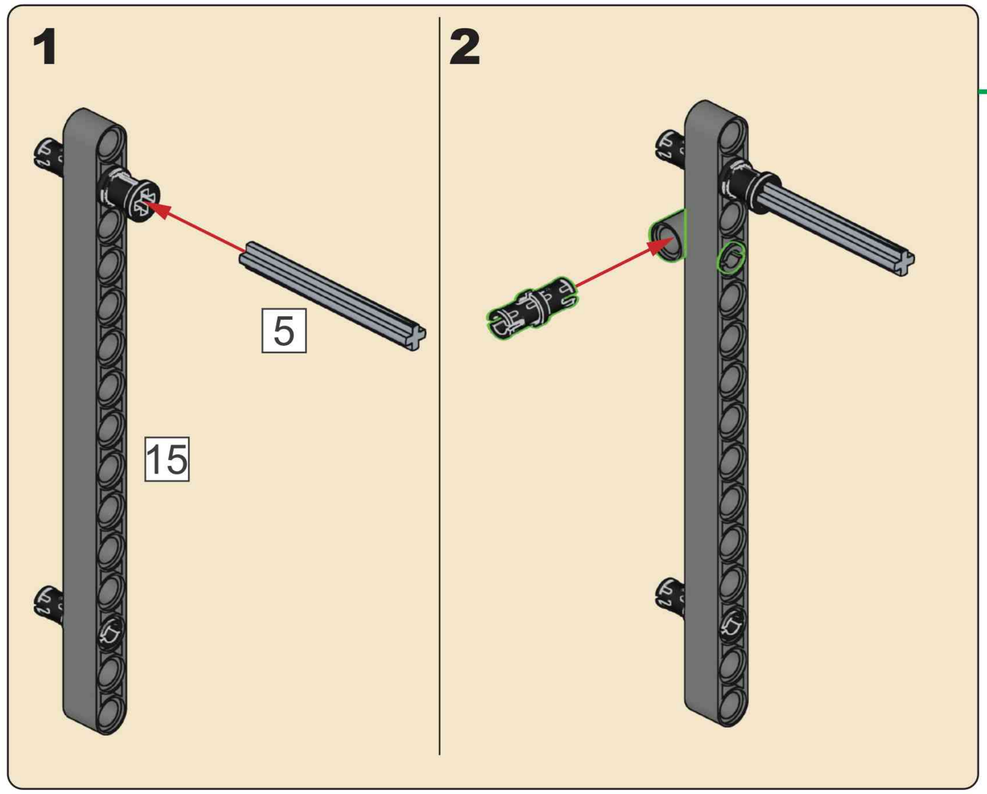

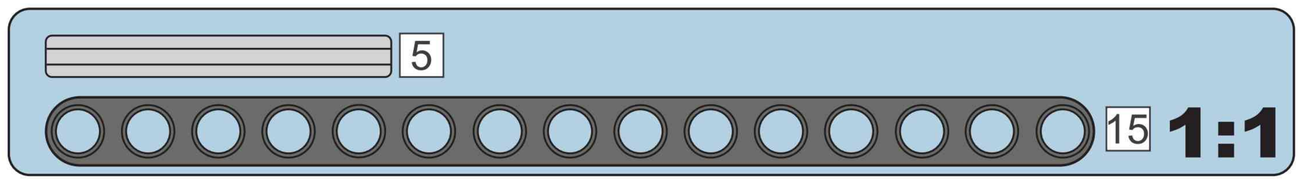

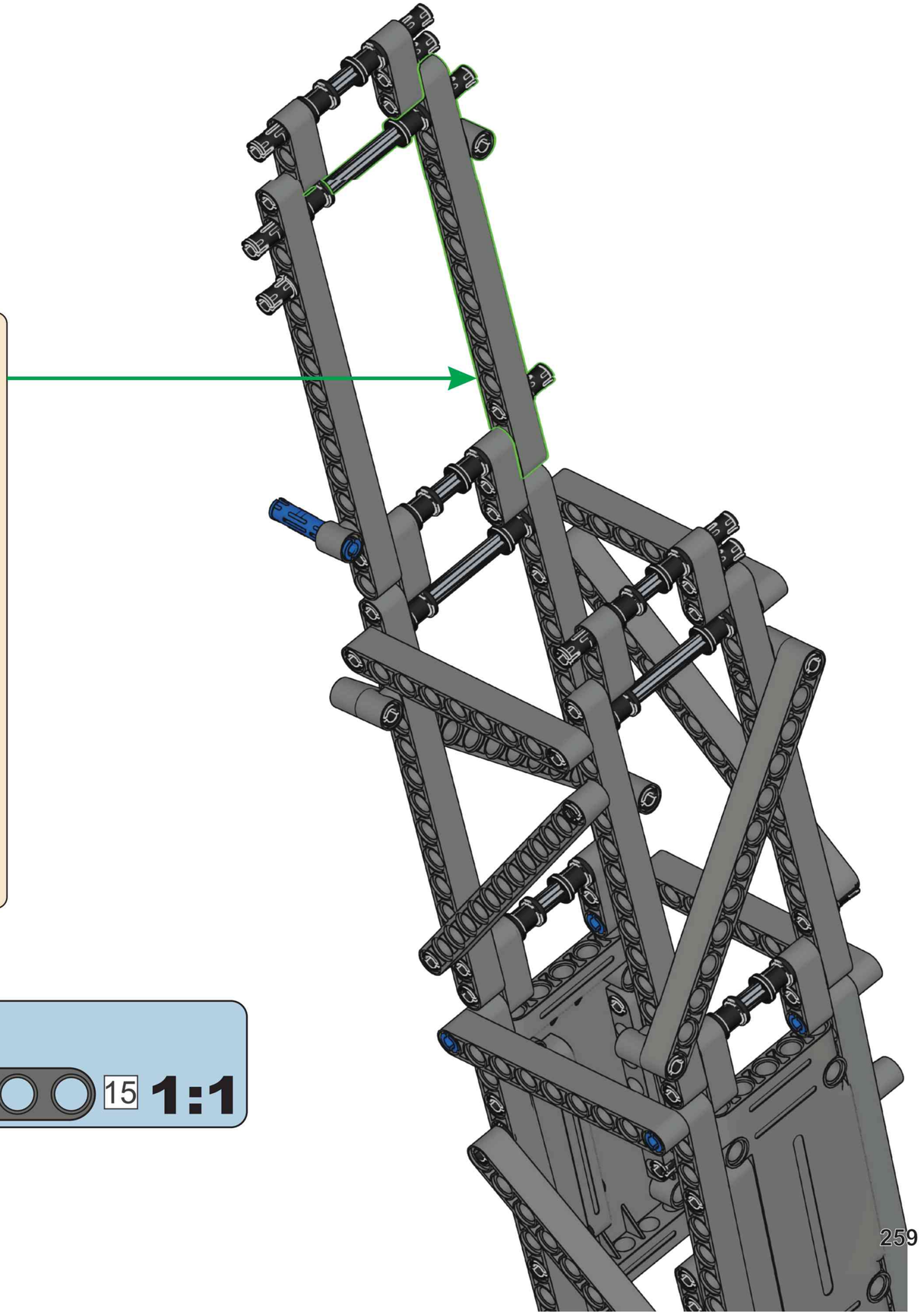

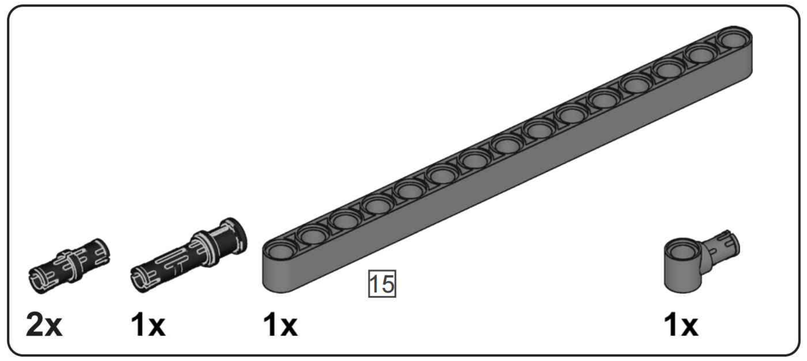

142

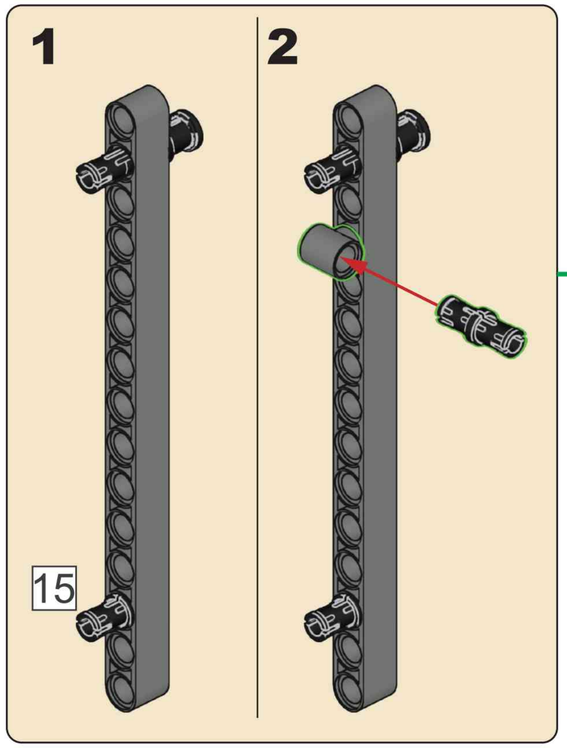

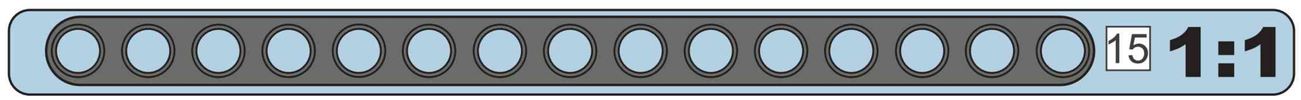

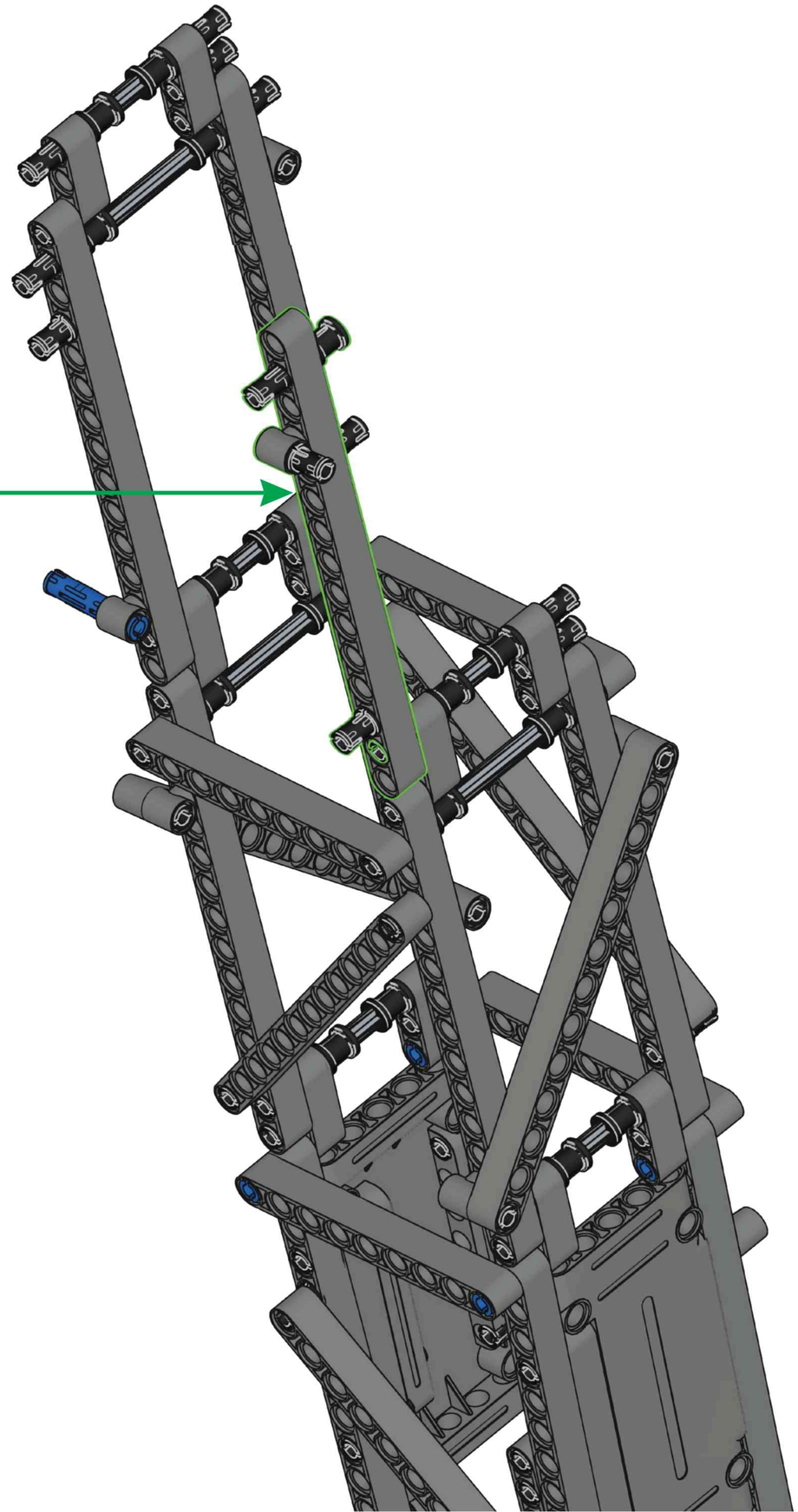

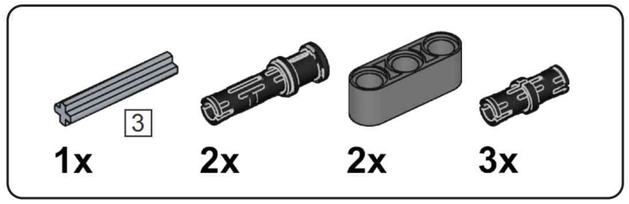

I43

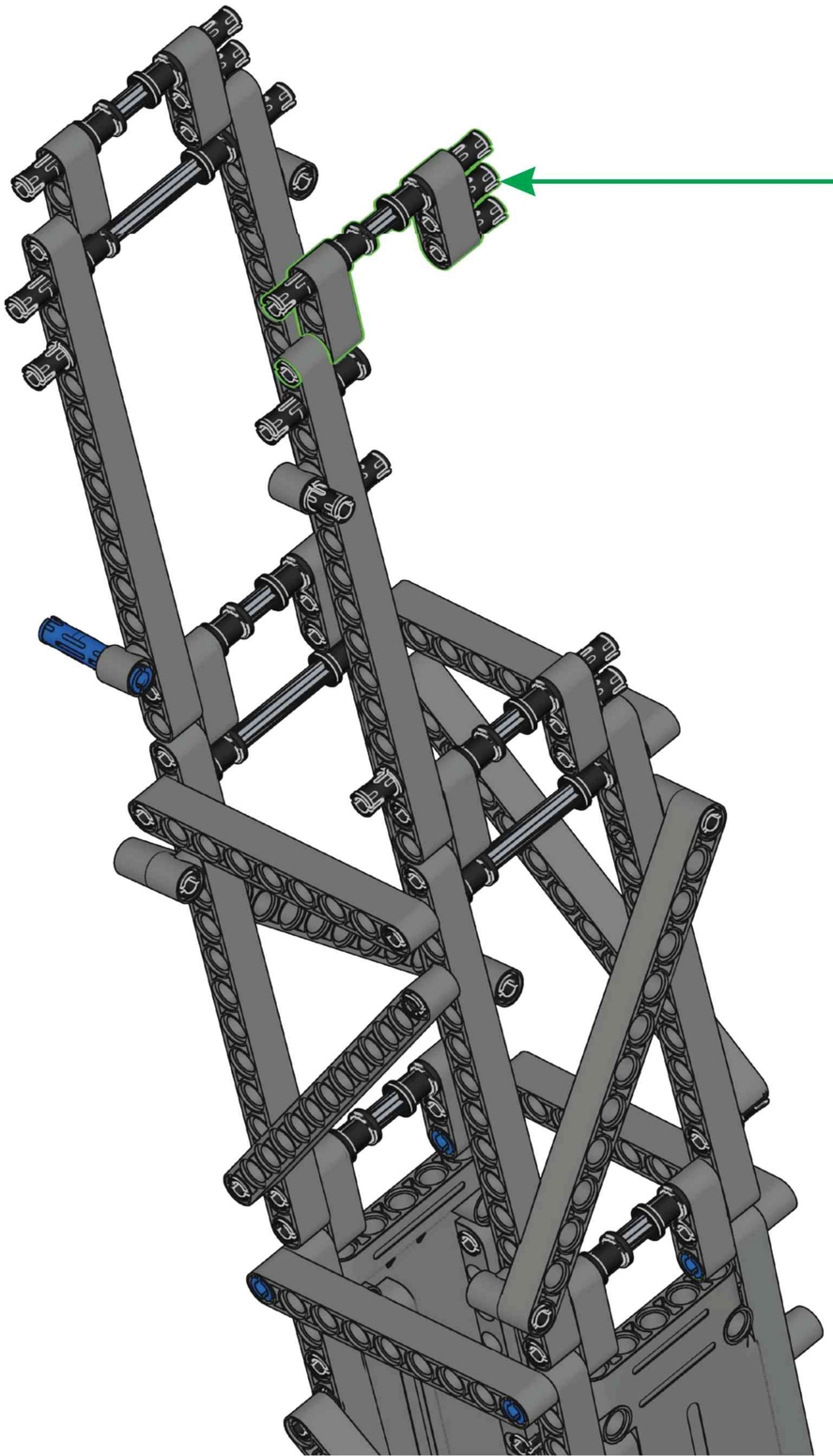

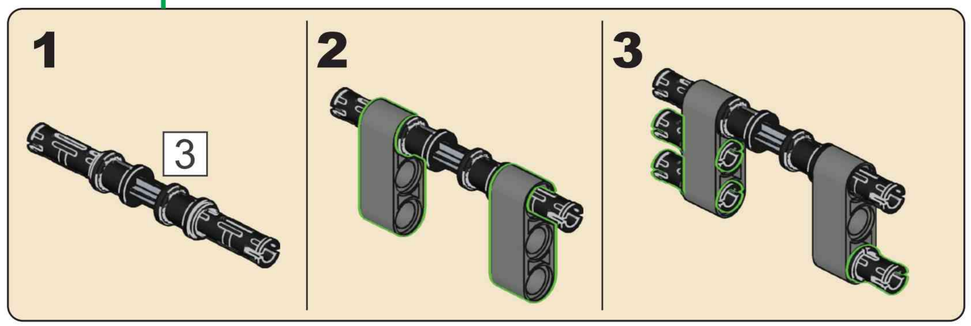

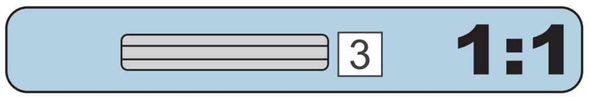

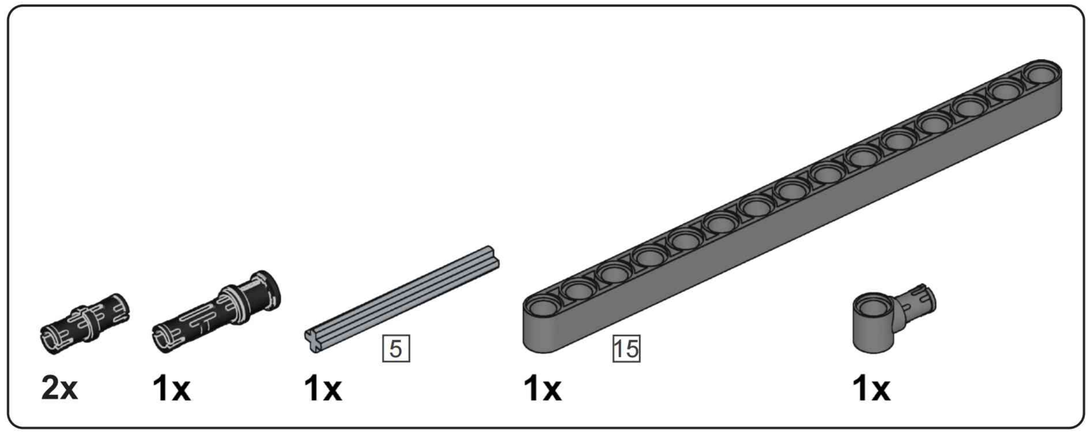

144

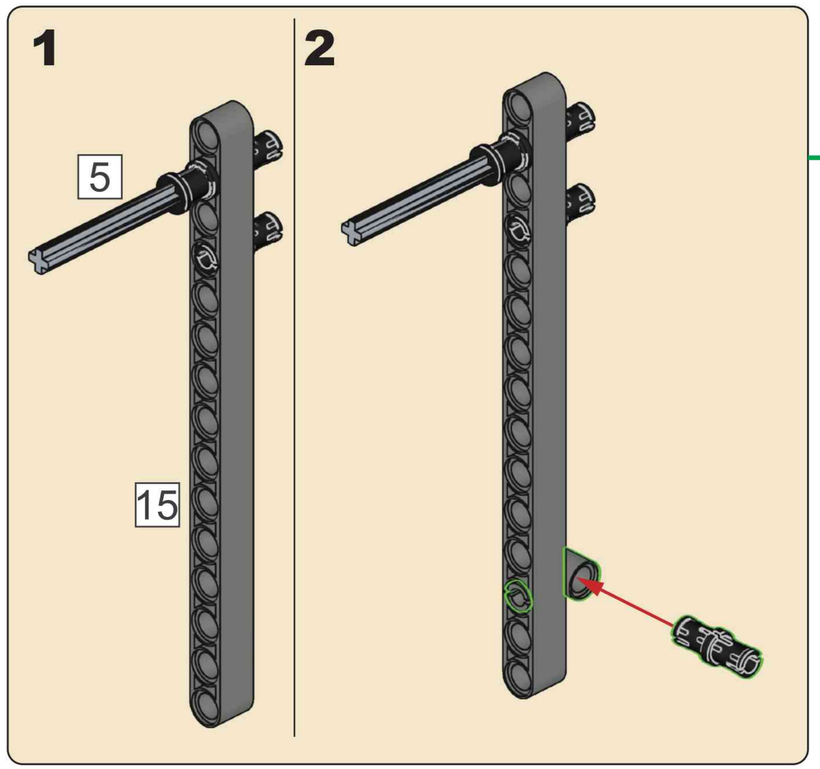

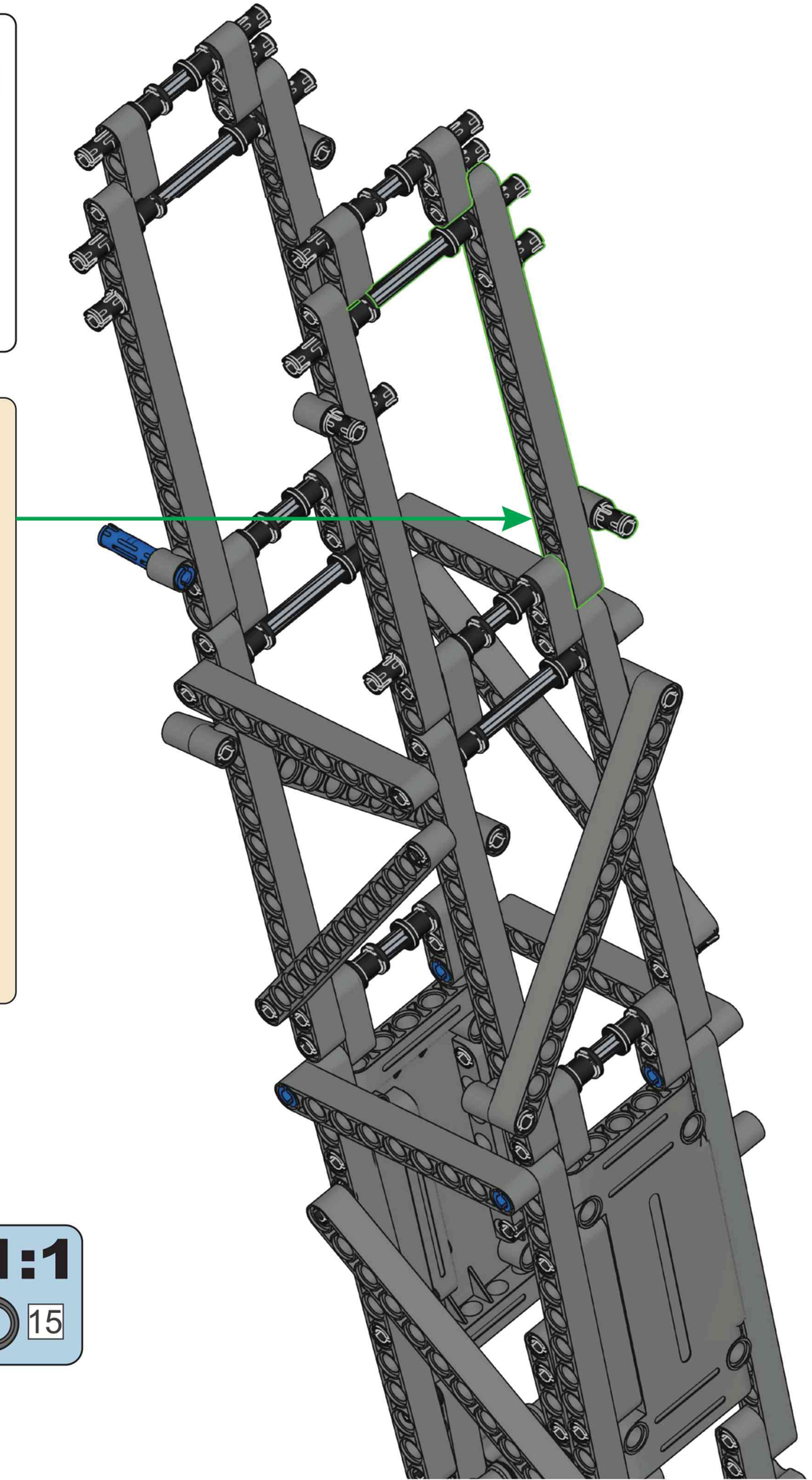

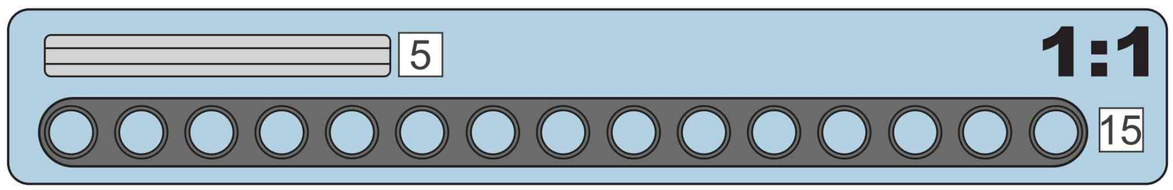

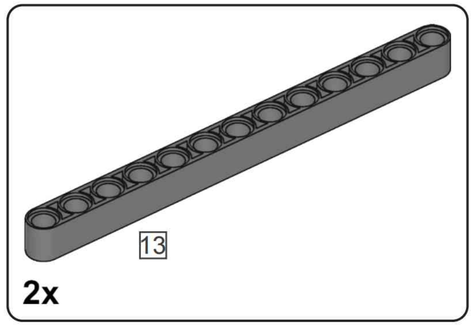

2x

I45

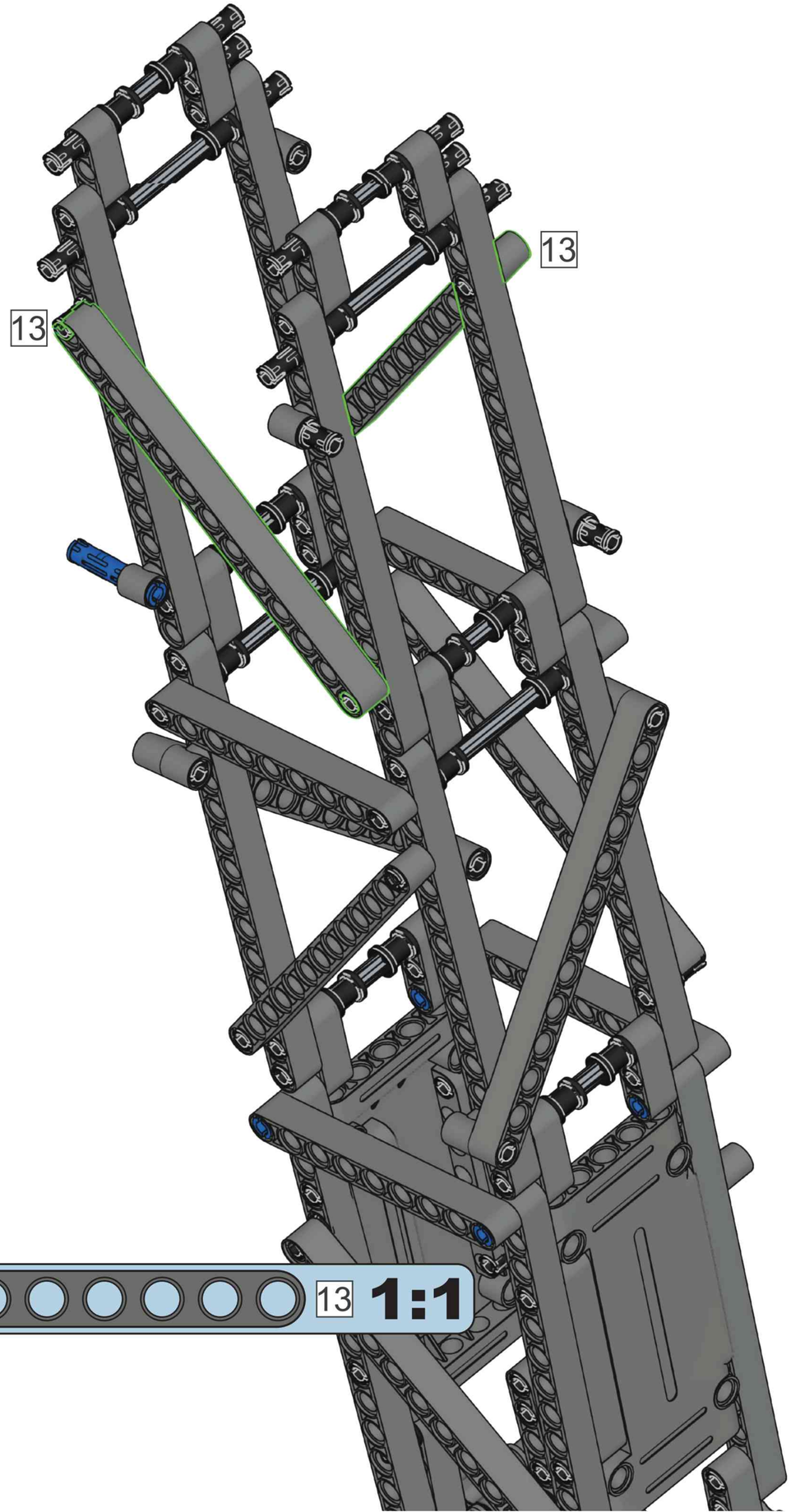

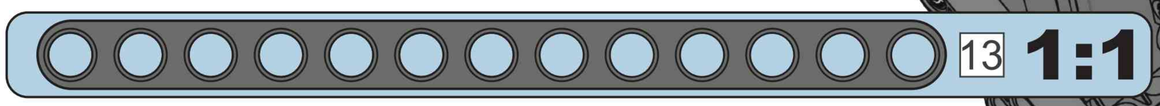

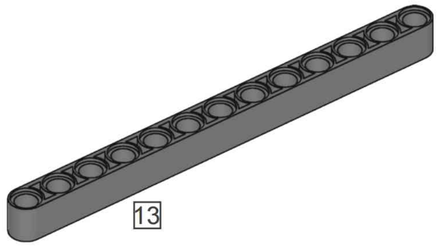

2x

146

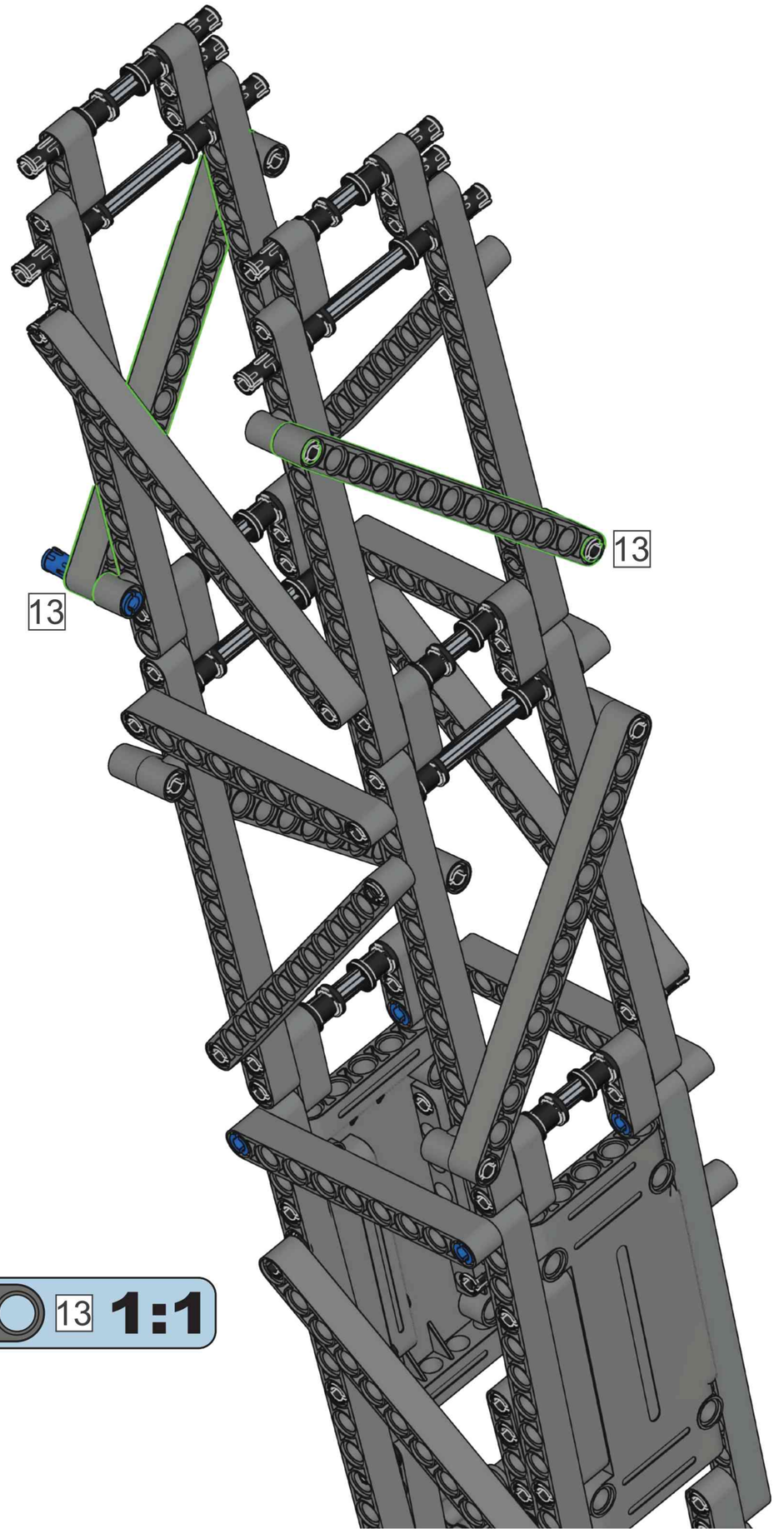

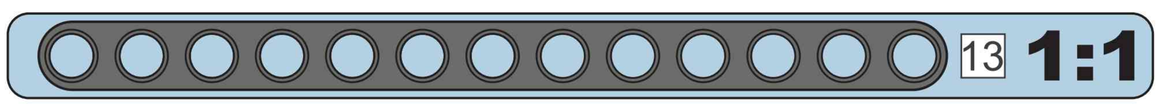

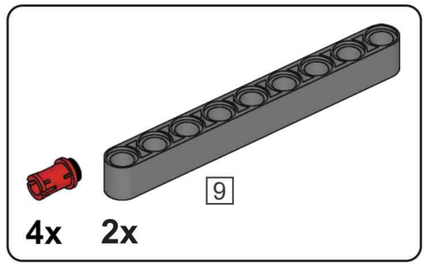

147

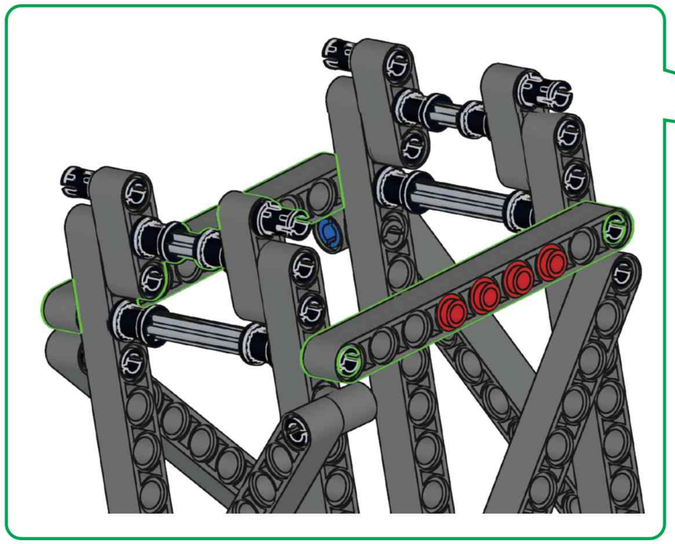

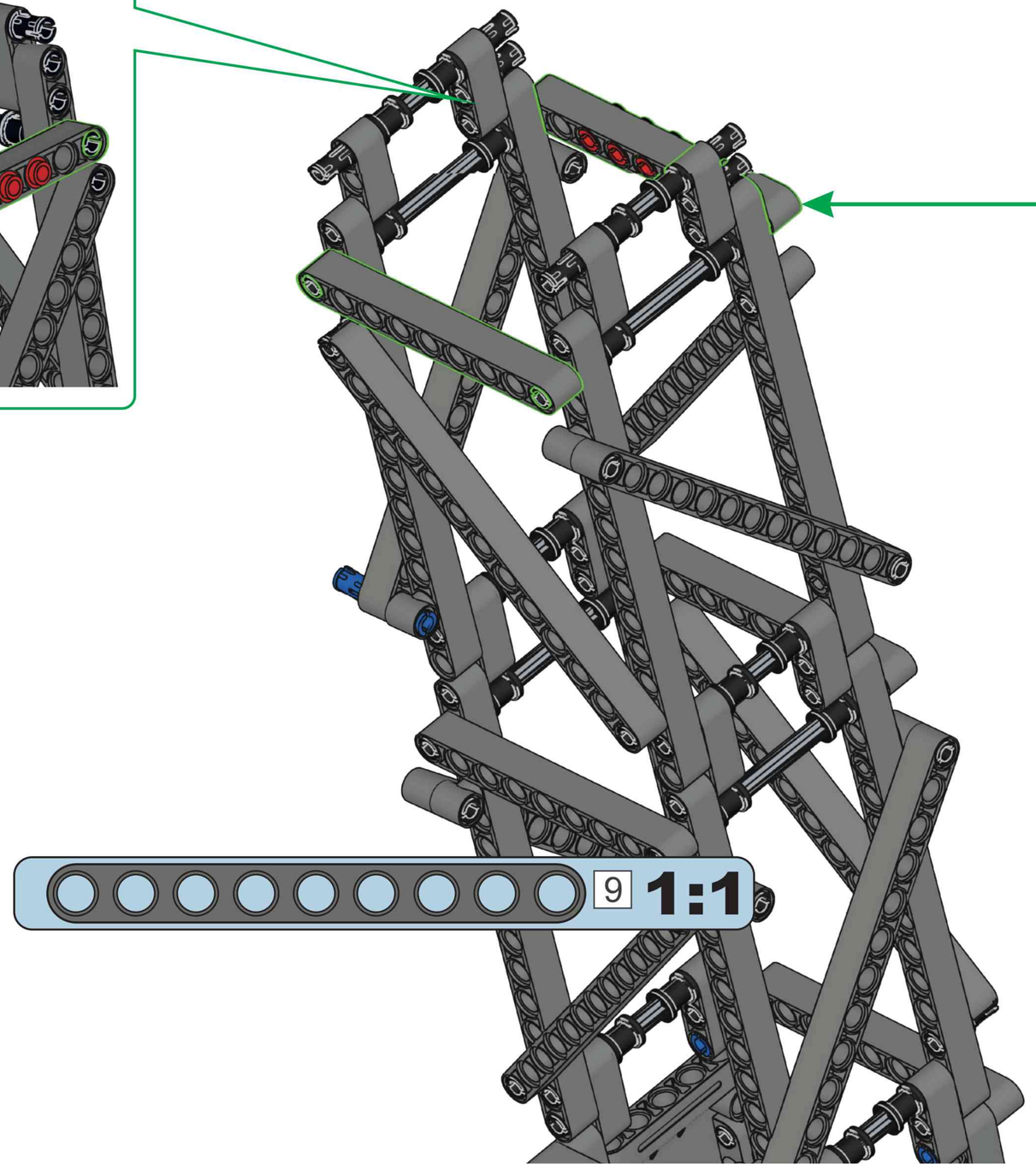

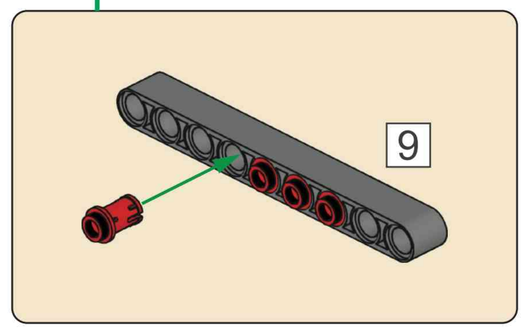

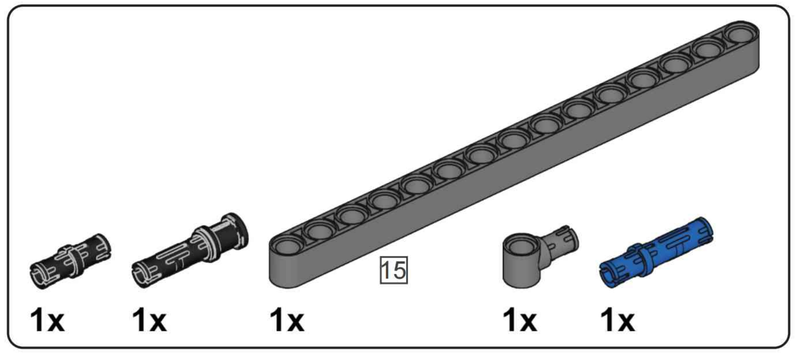

I48

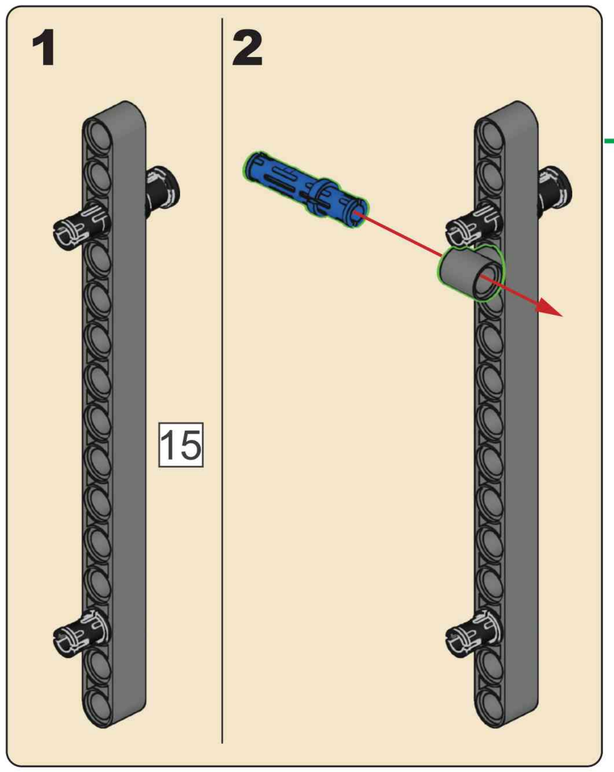

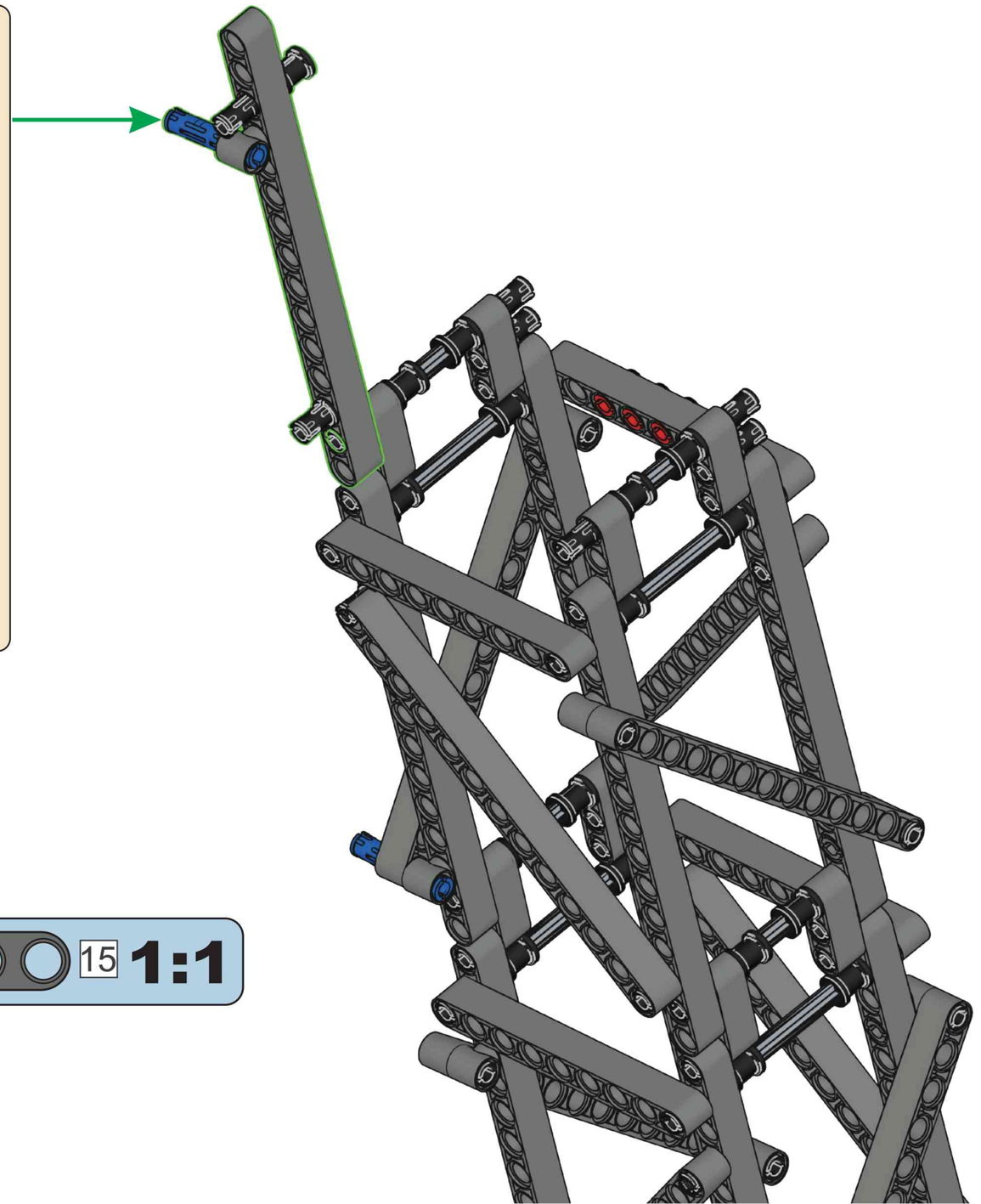

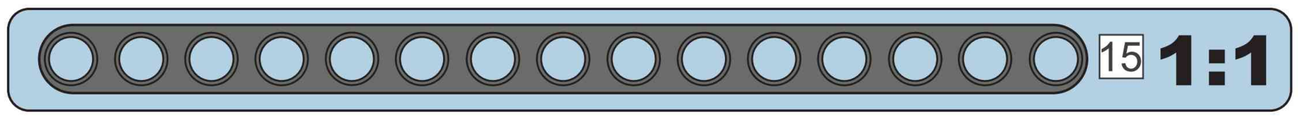

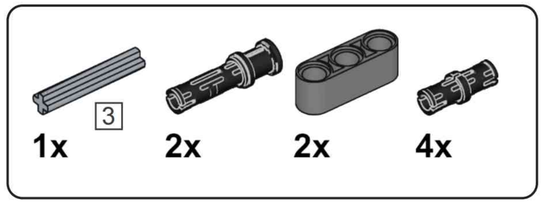

I49

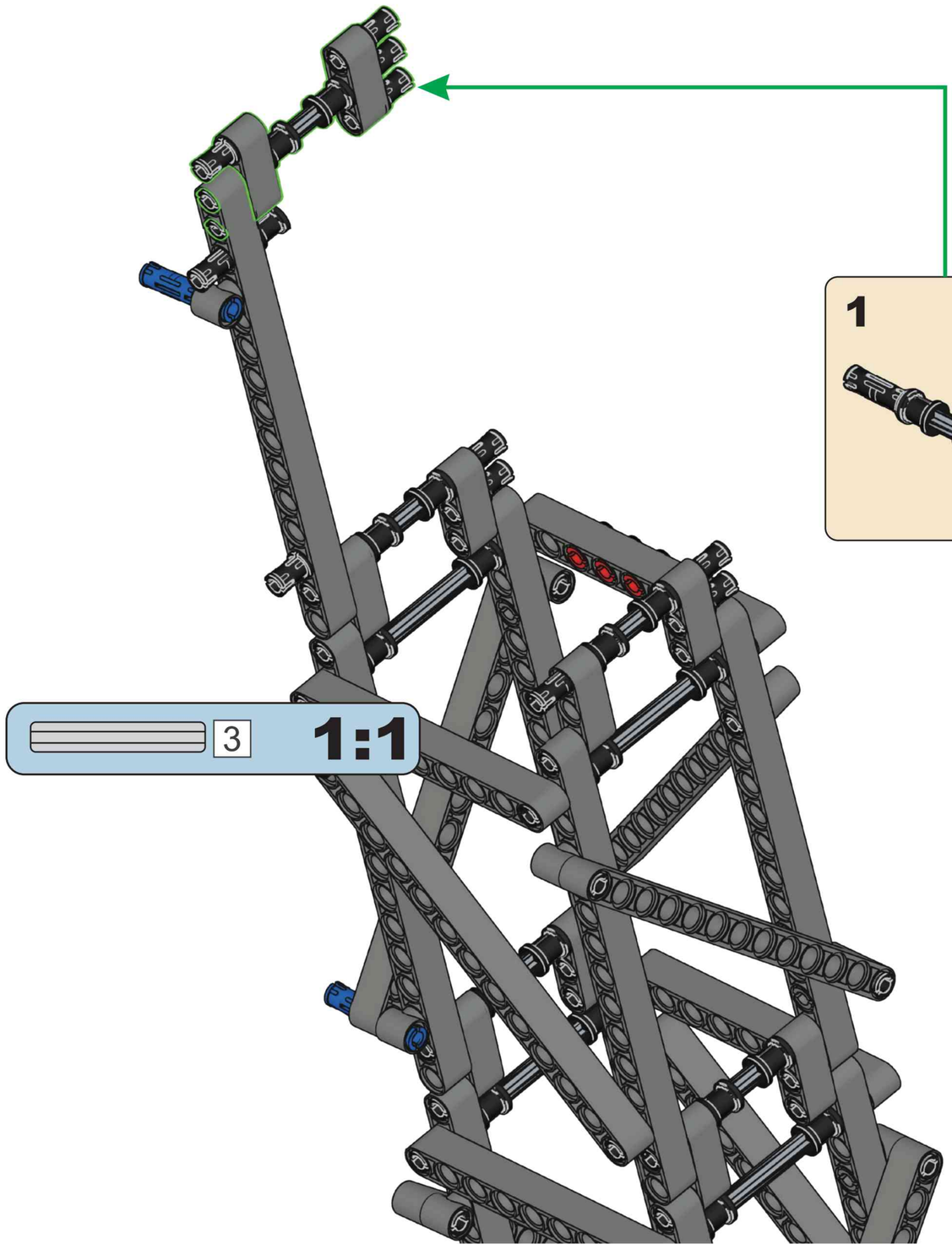

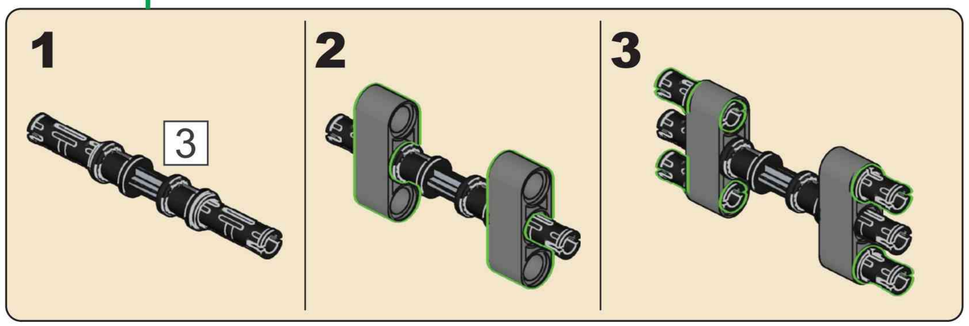

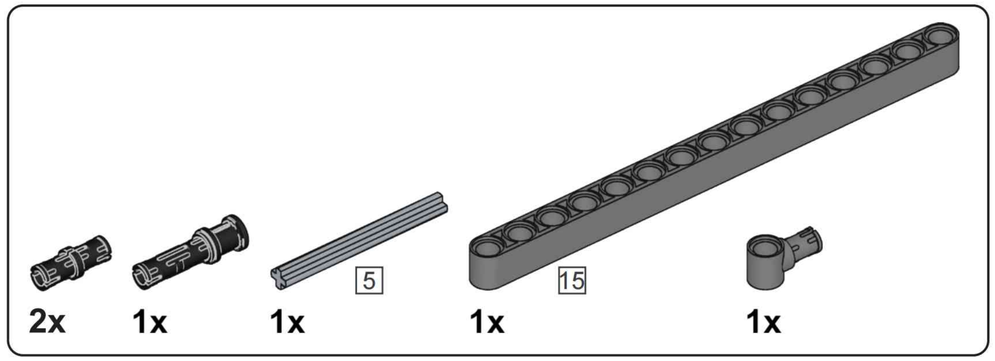

I50

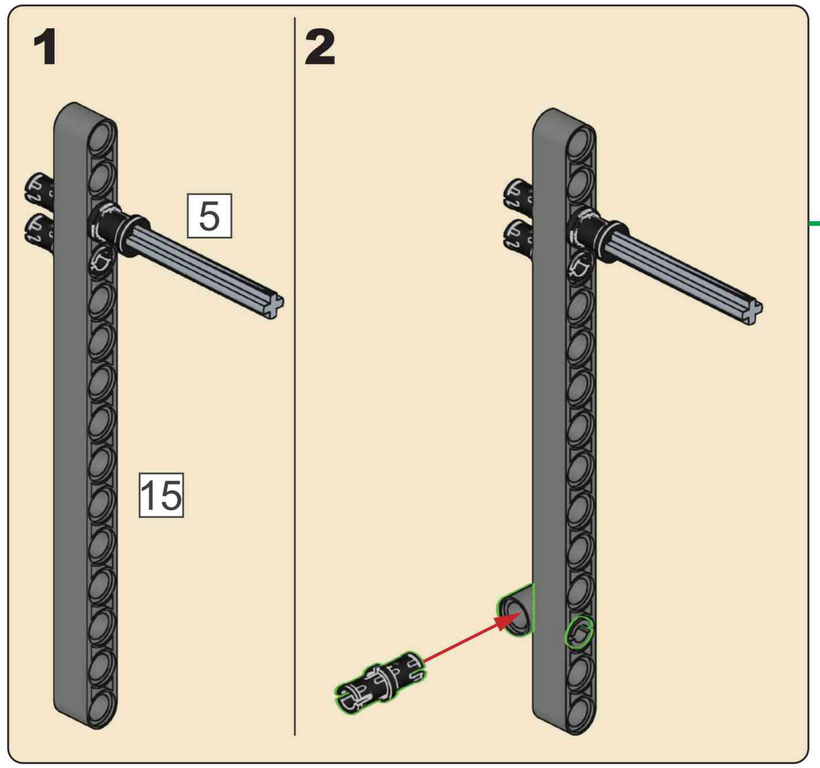

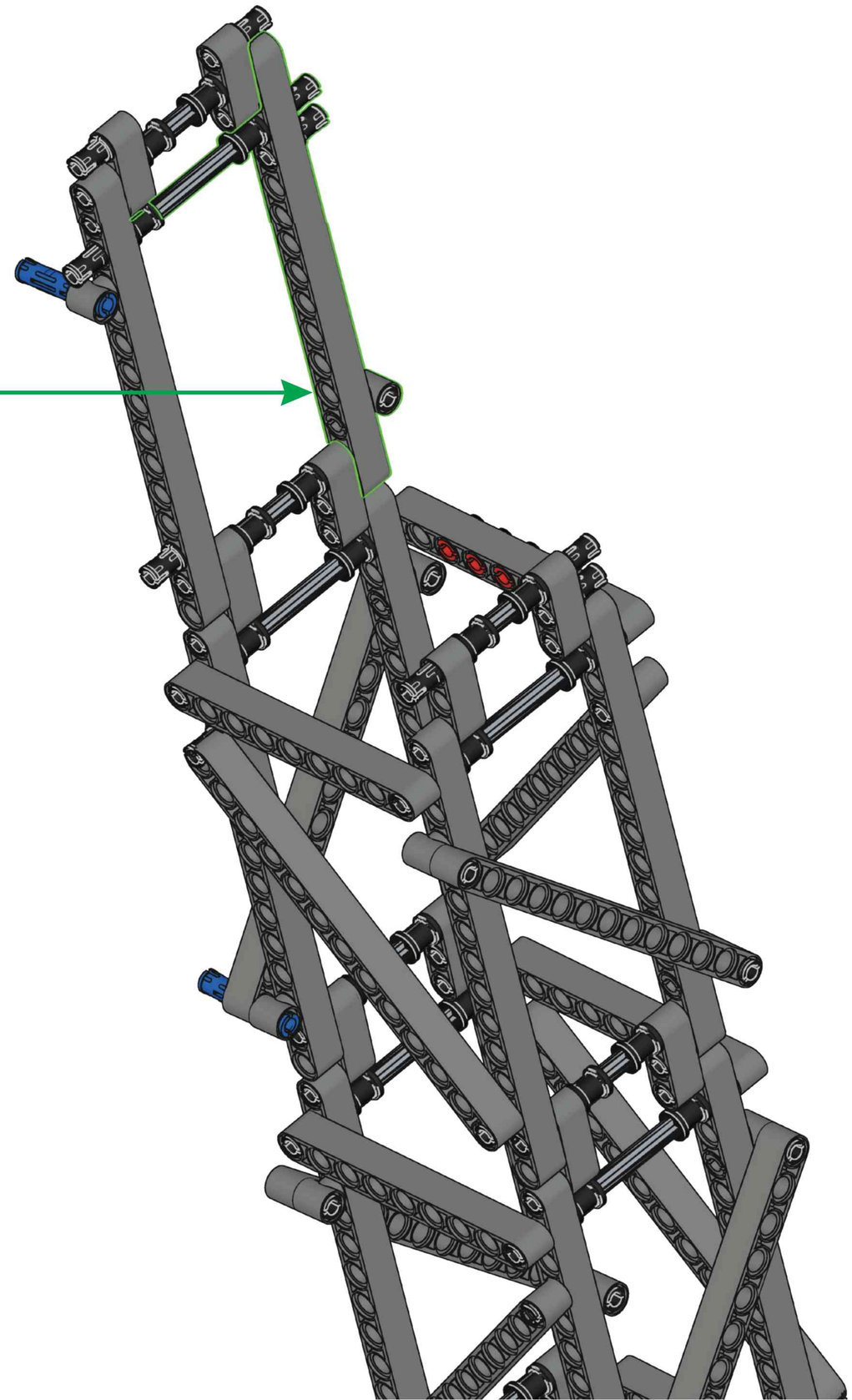

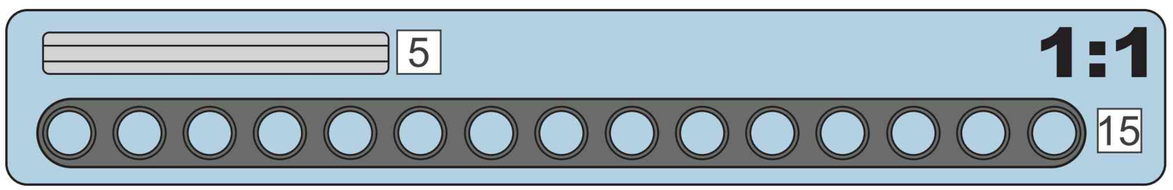

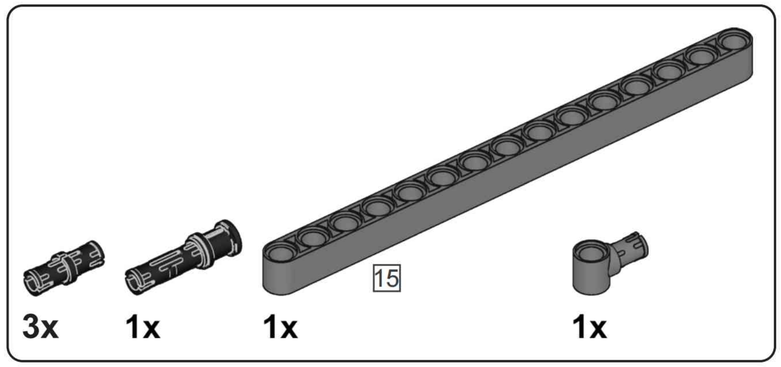

I51

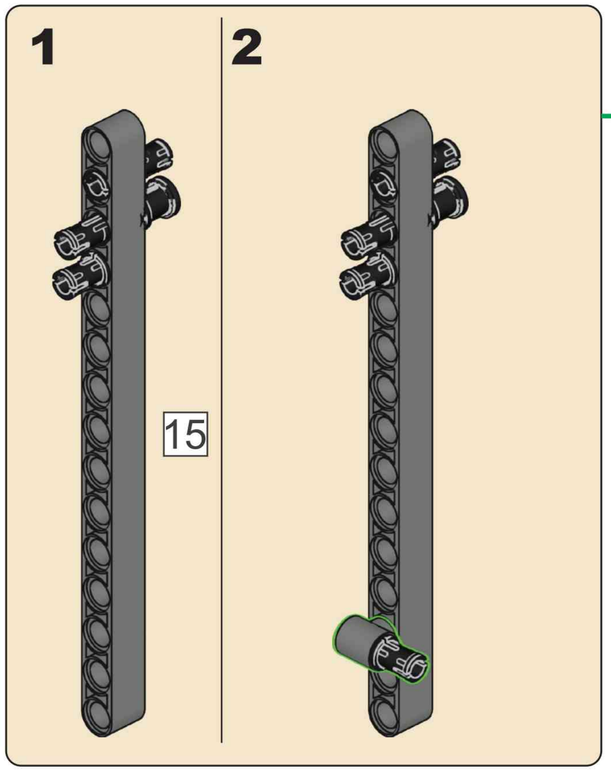

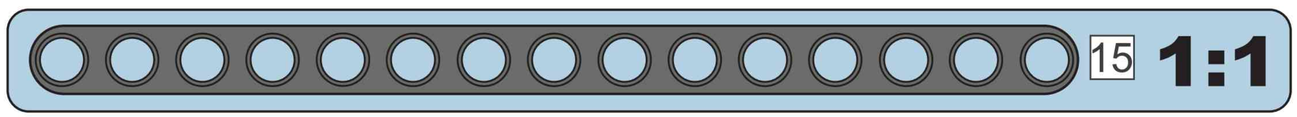

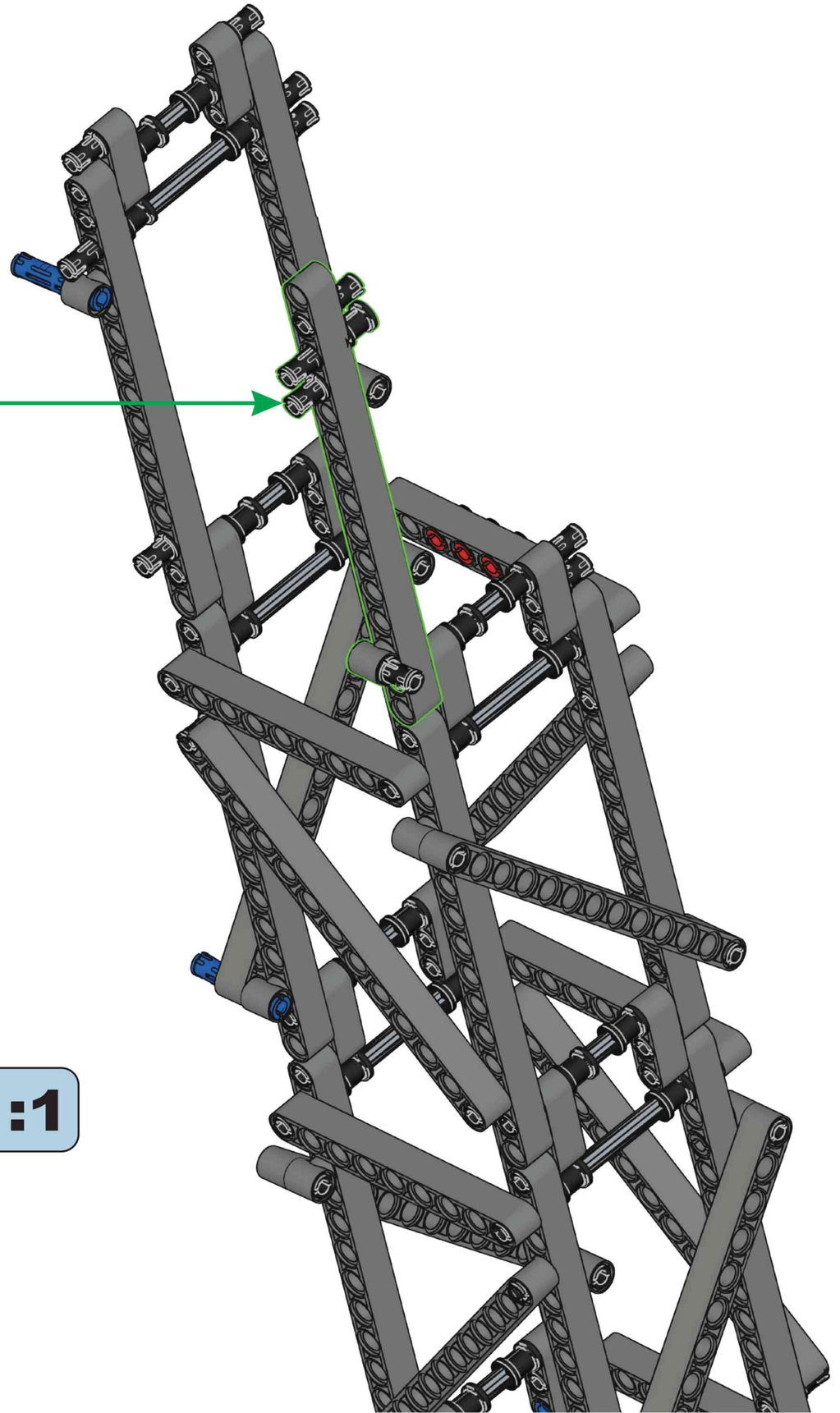

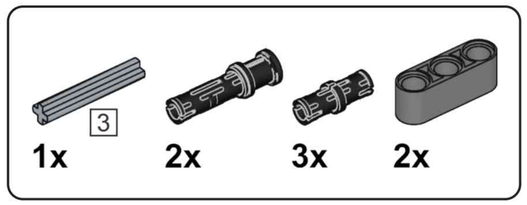

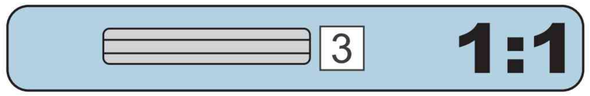

I52

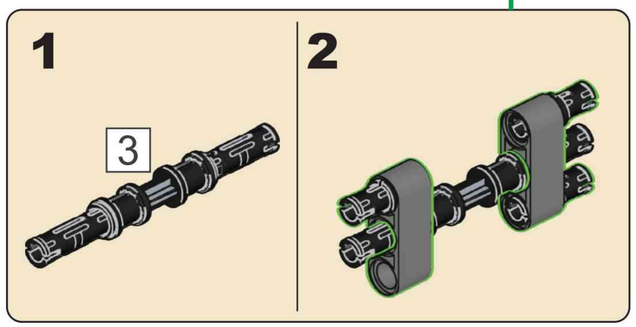



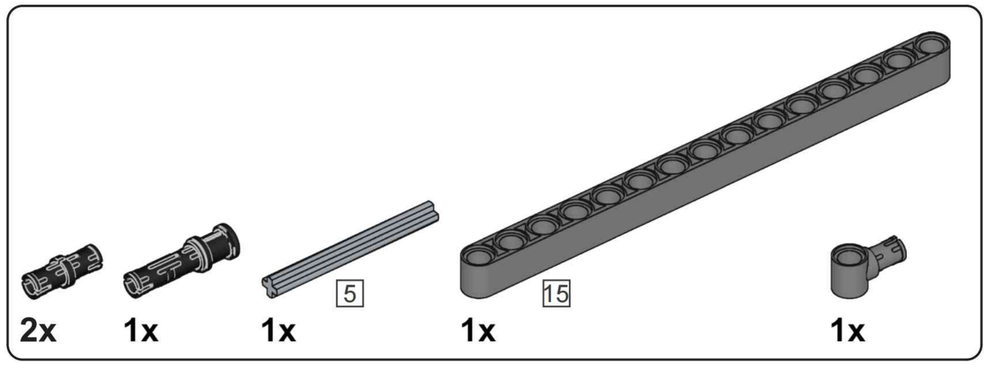

I53

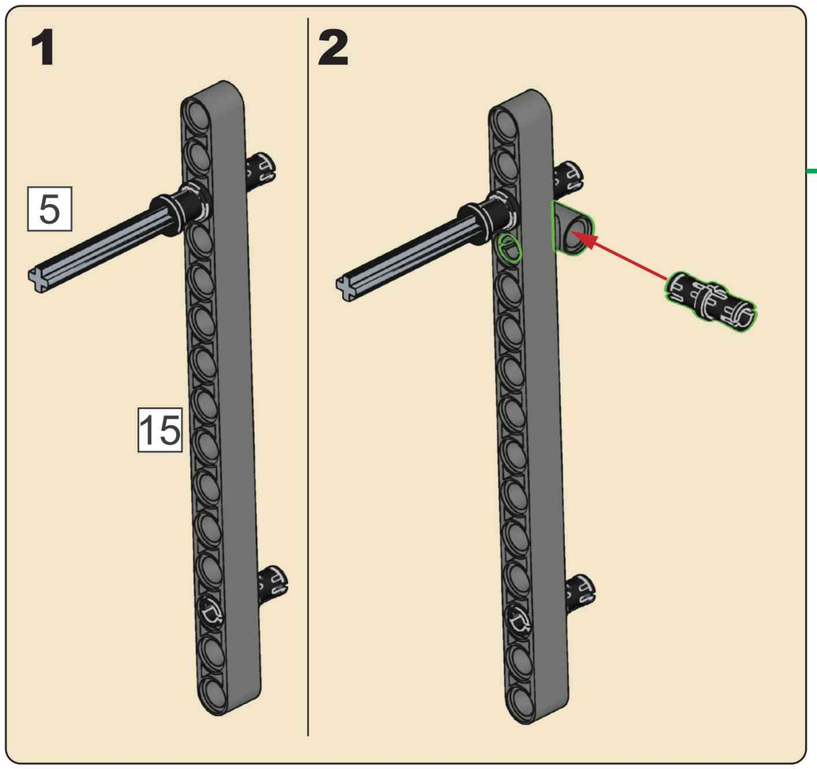

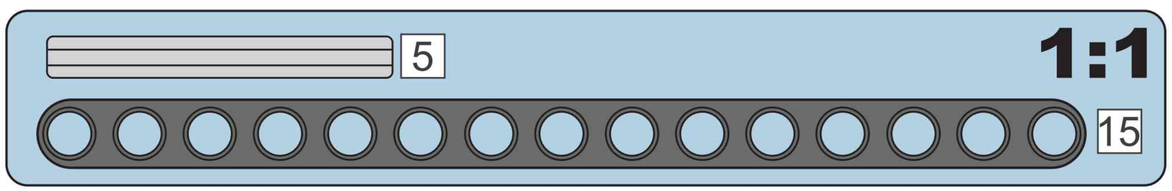

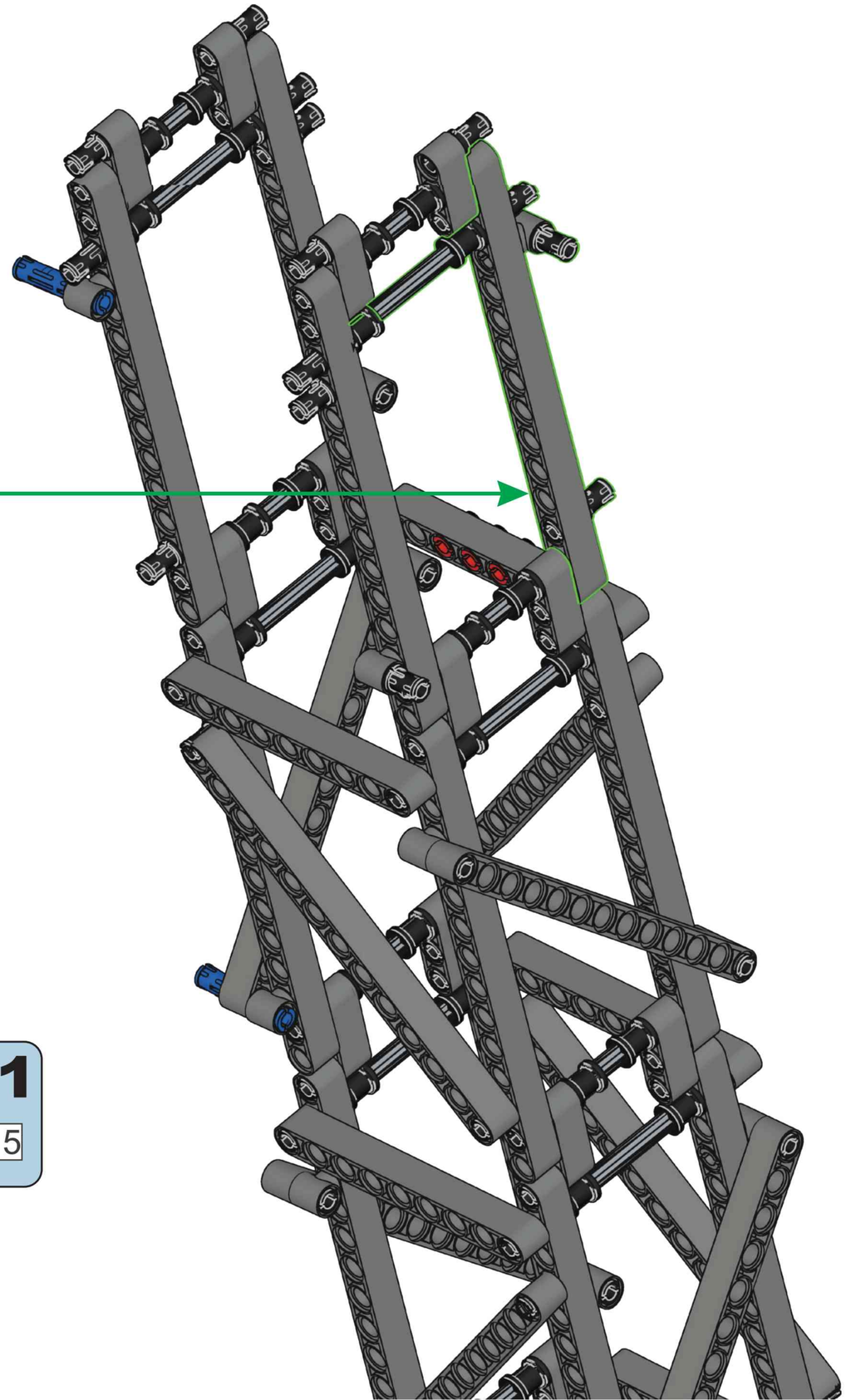

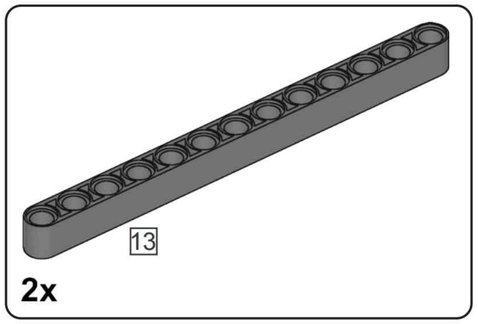

I54

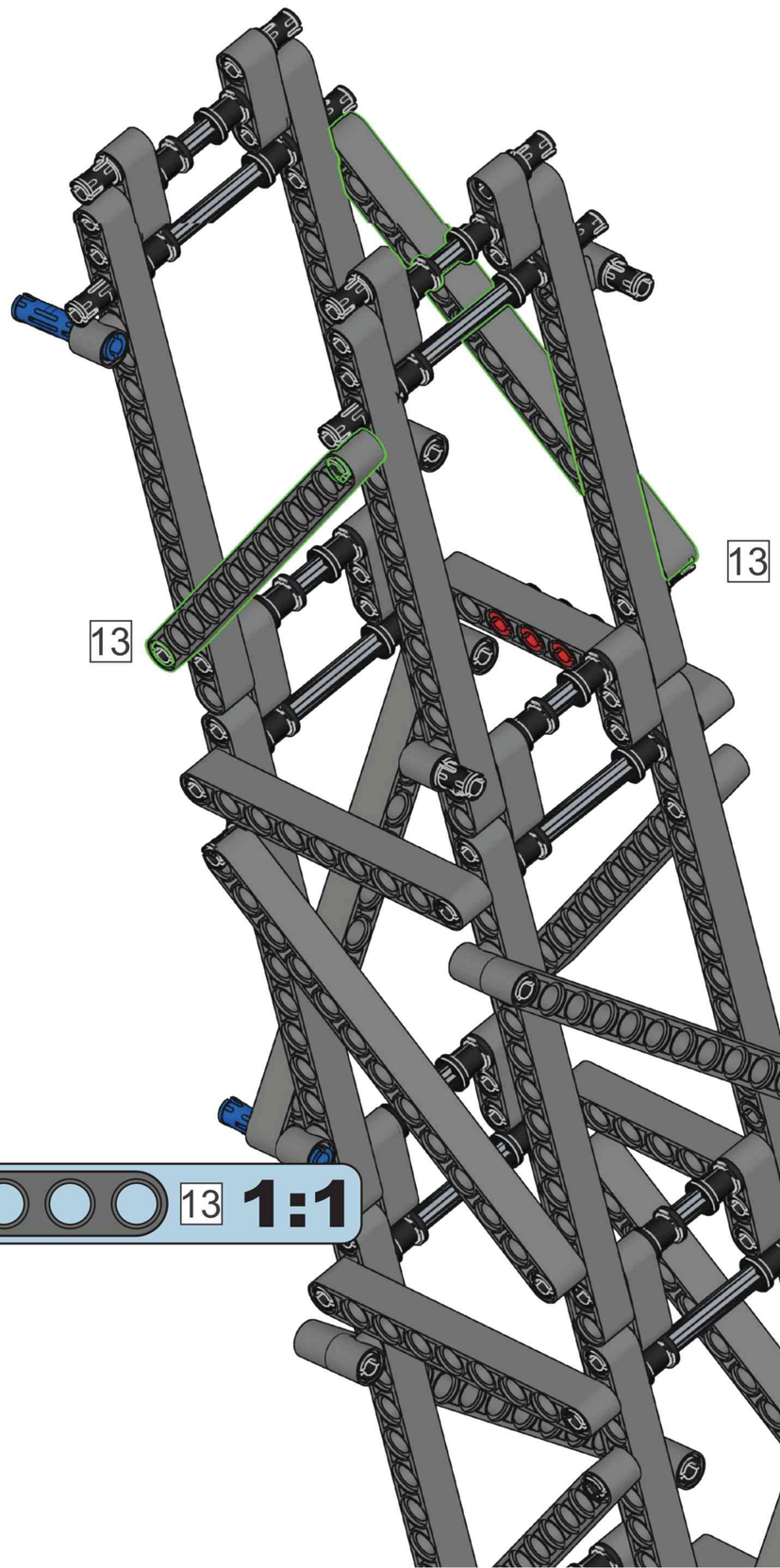

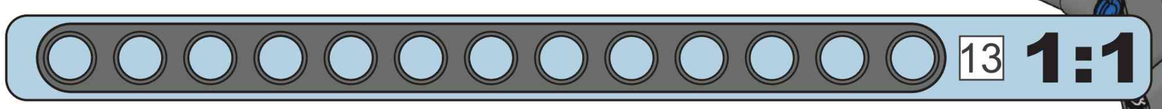

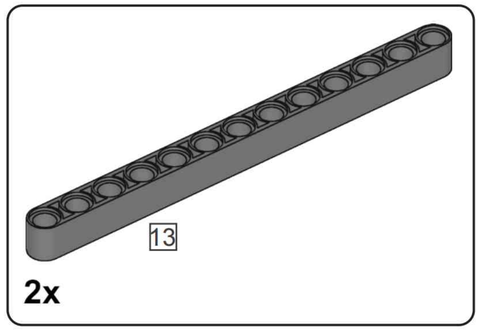

2x

I55

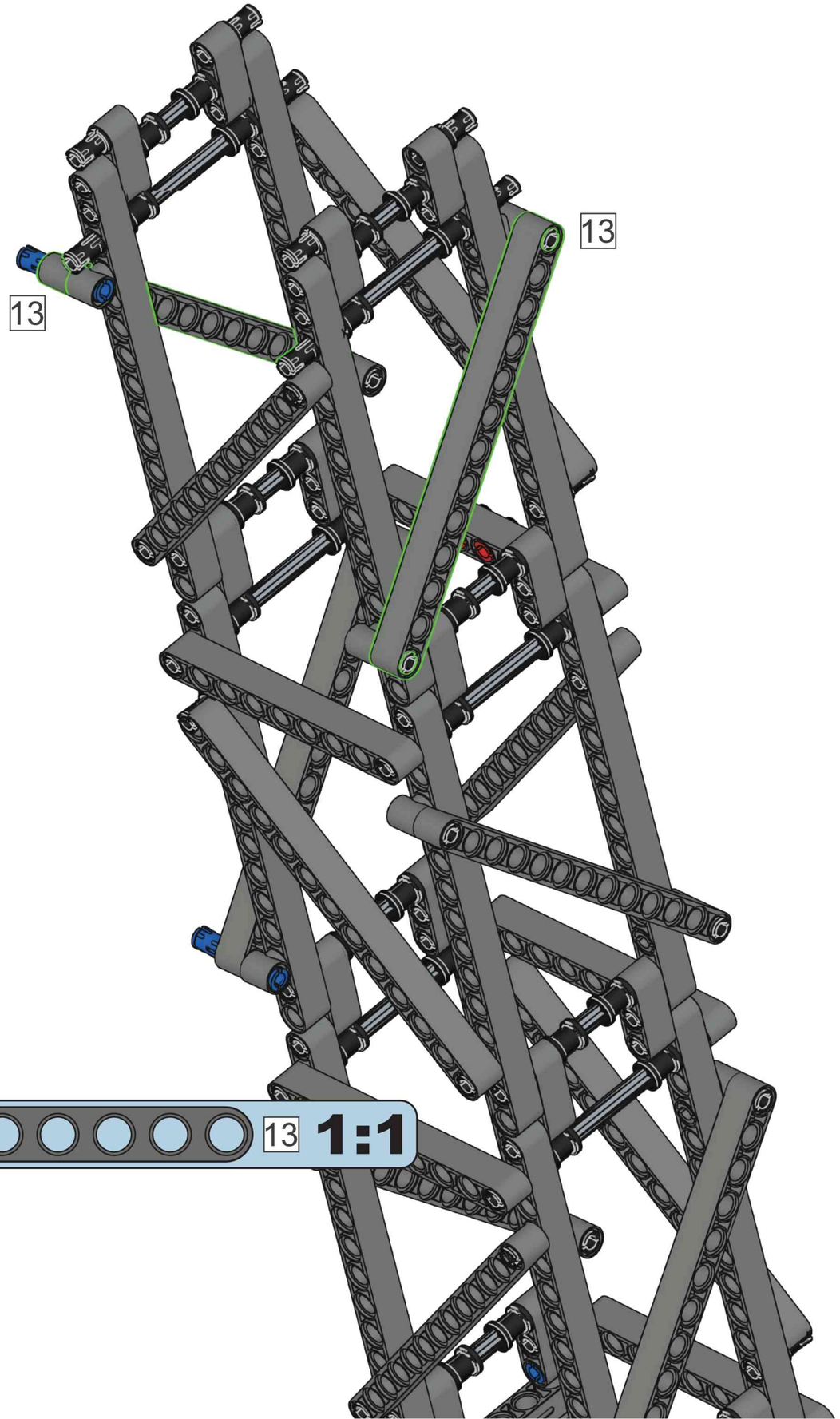

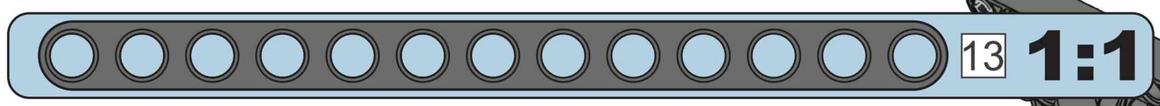

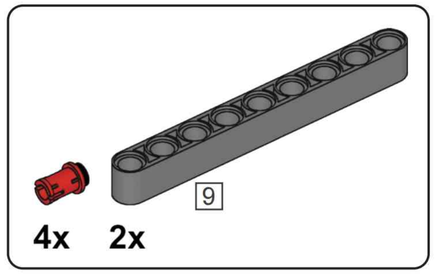

I56

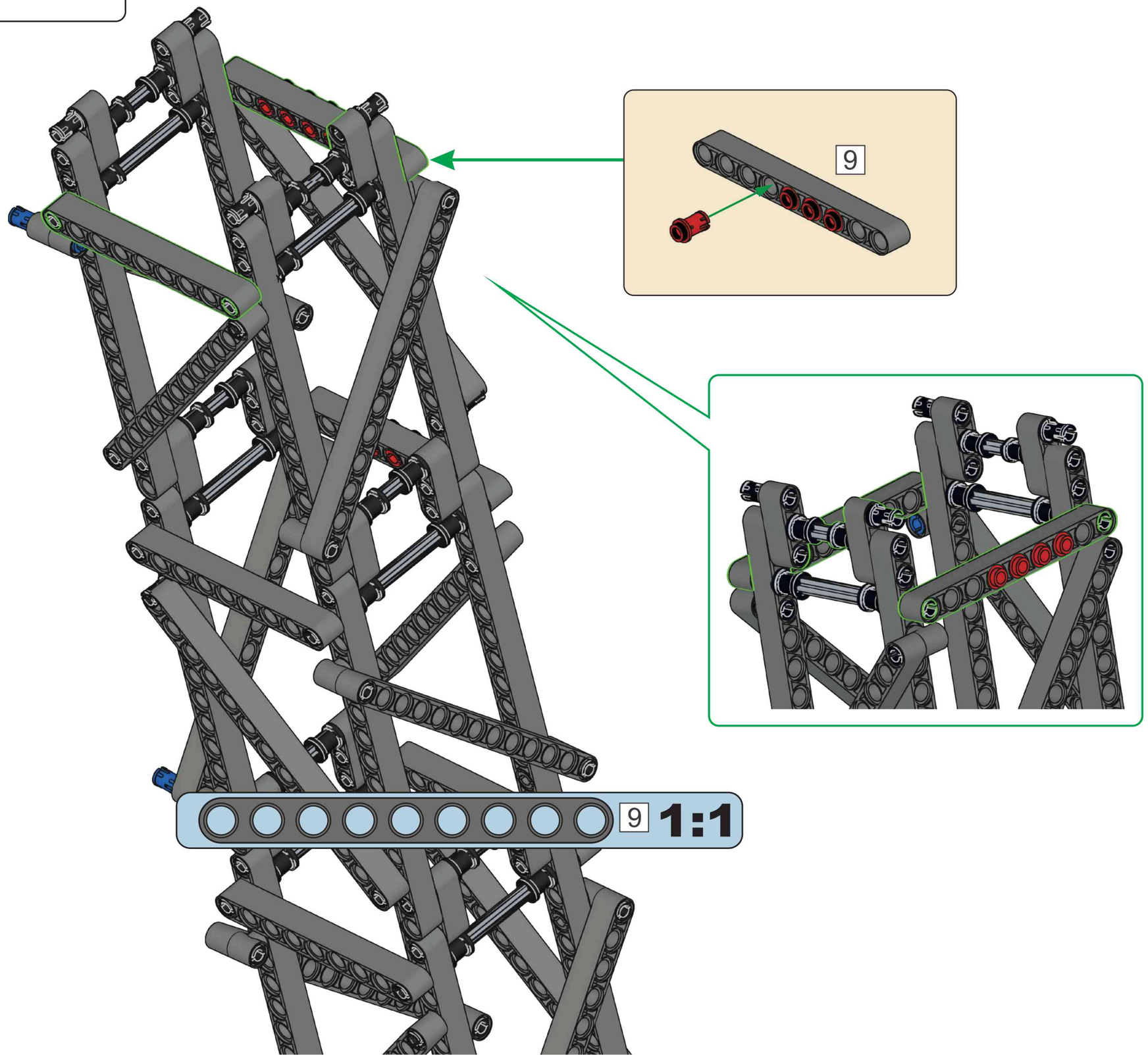

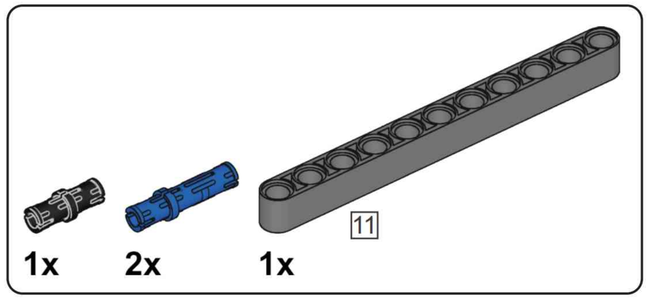

I57

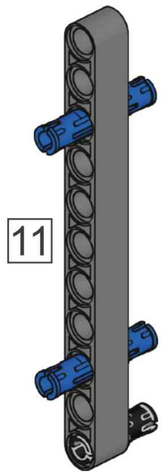

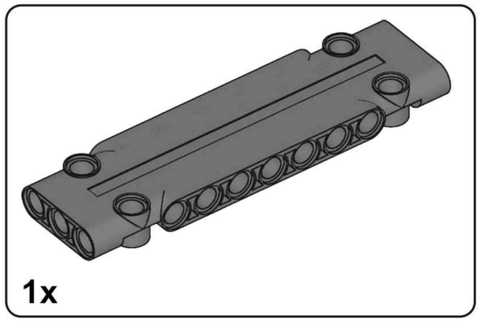

I58

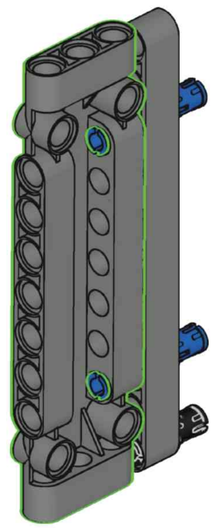

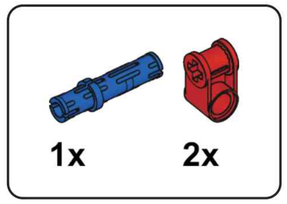

I59

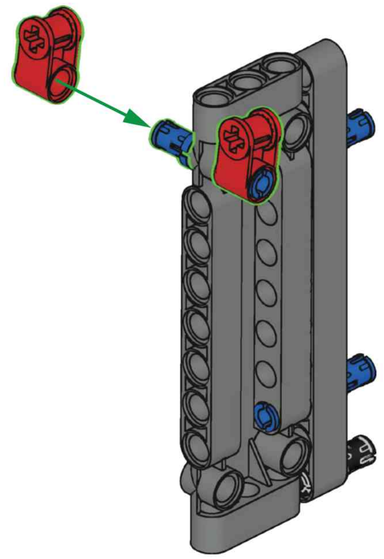

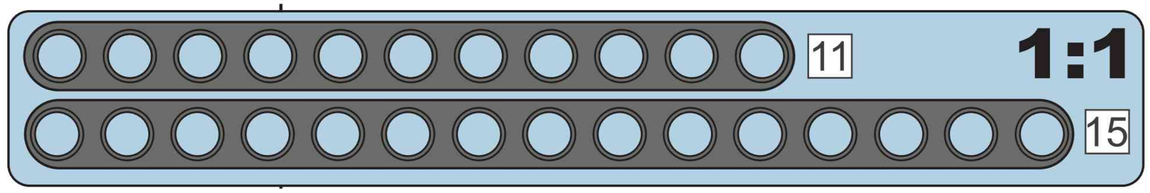

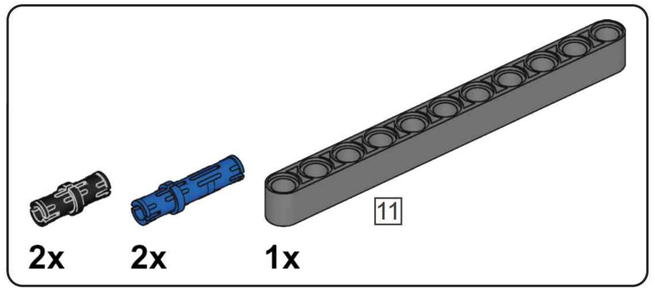

I60

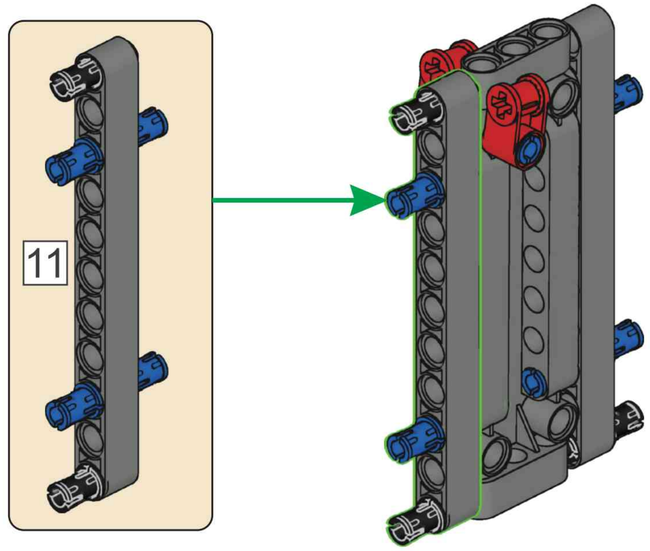

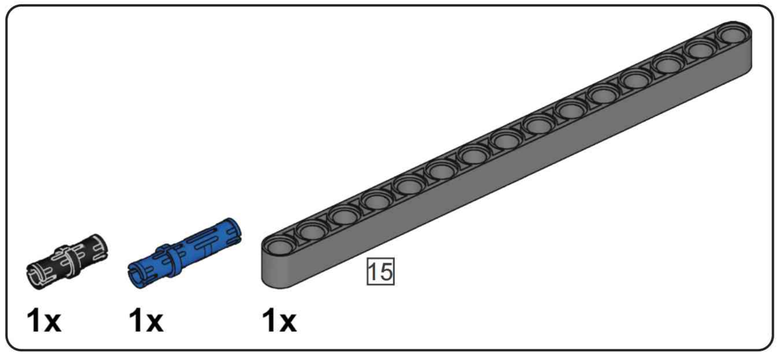

I61

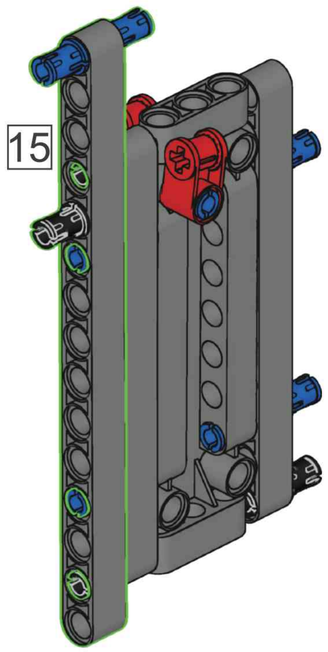

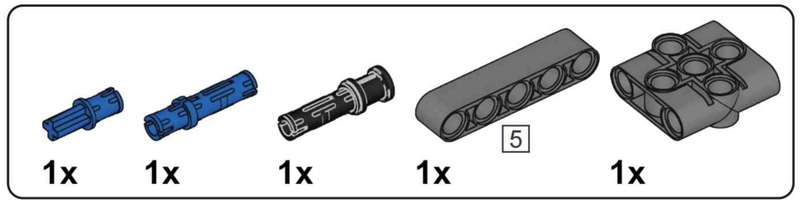

I62

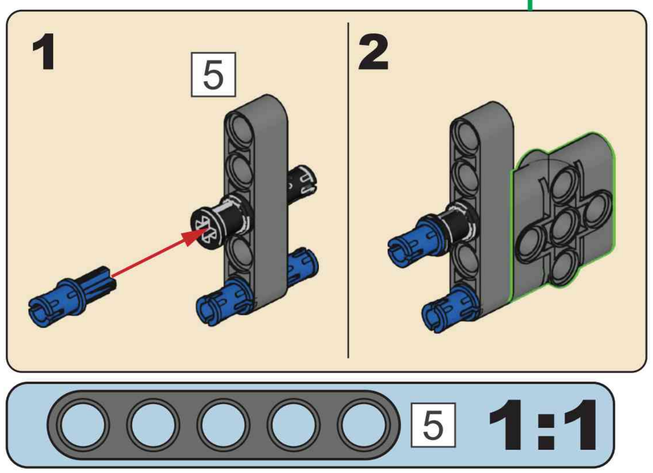

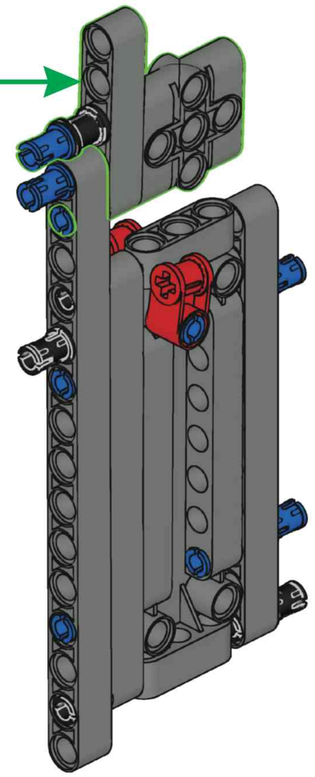

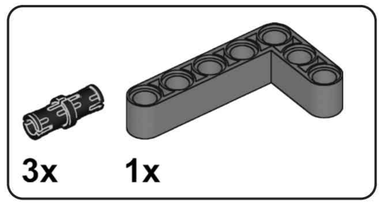

I63

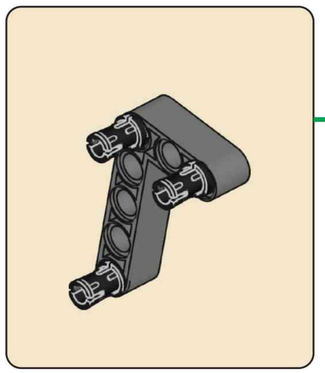

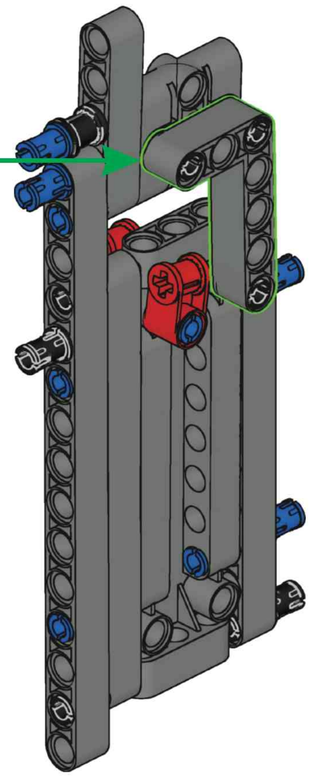

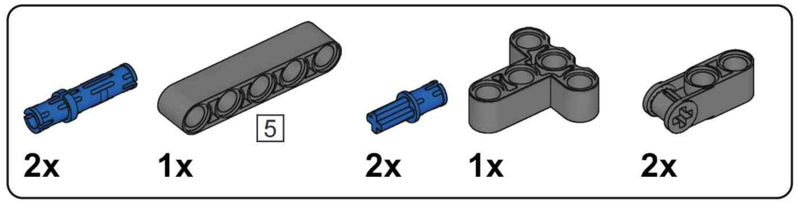

I64

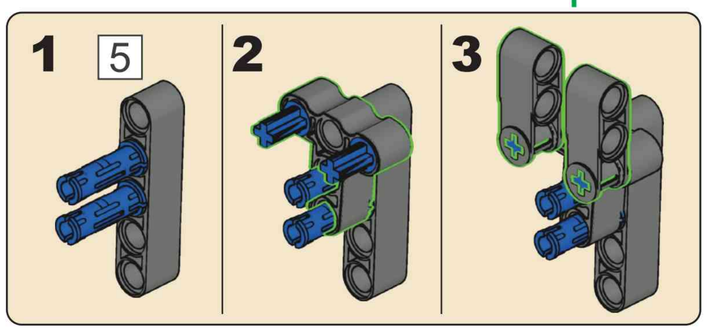

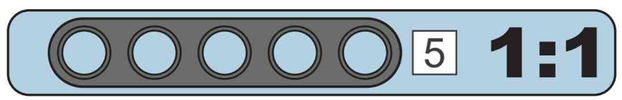

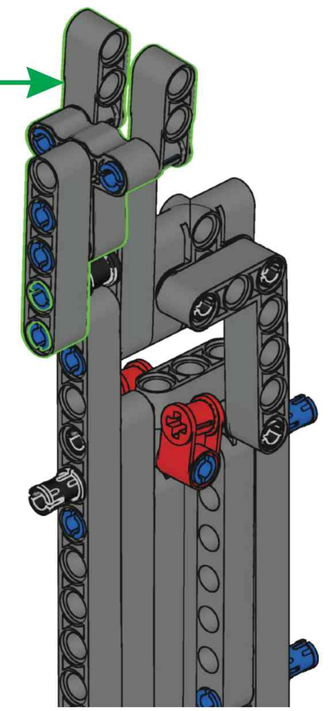

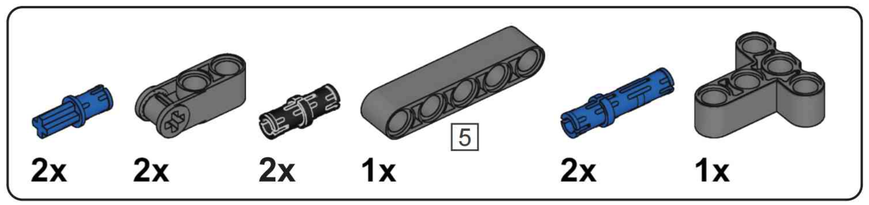

I65

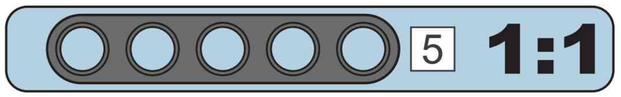

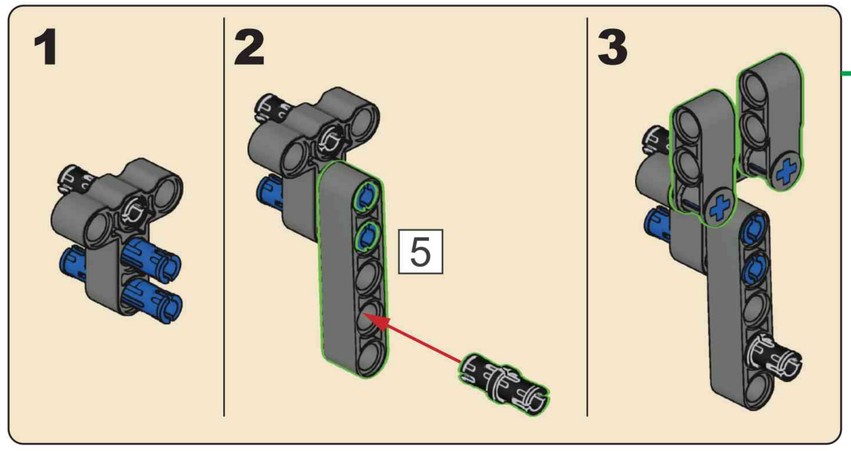

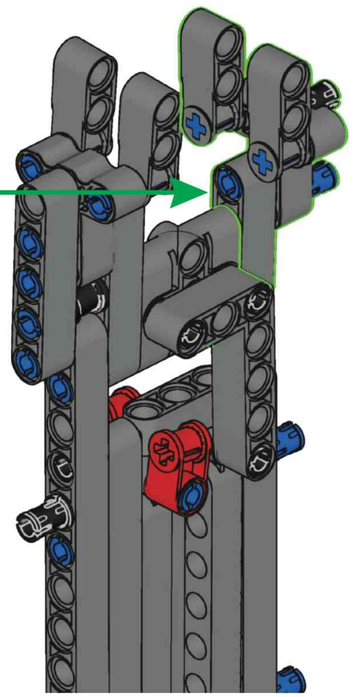

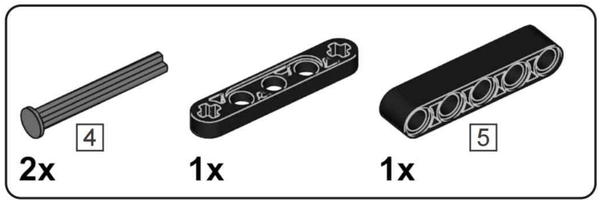

I66

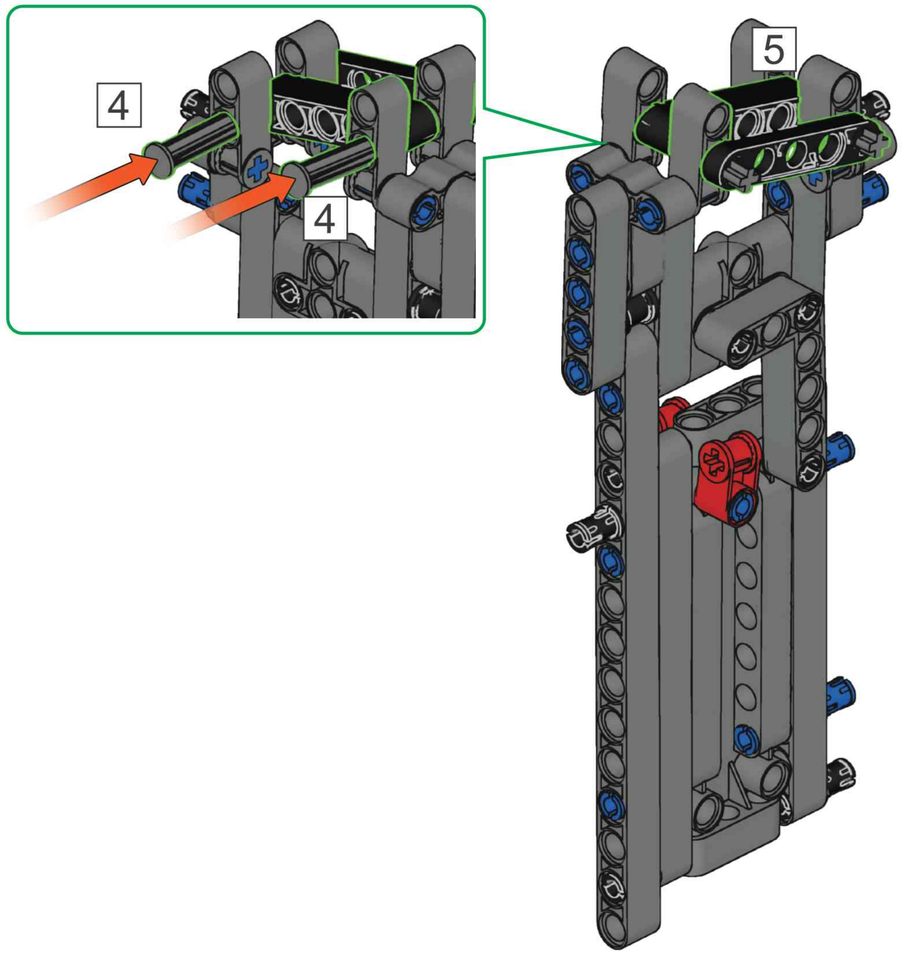

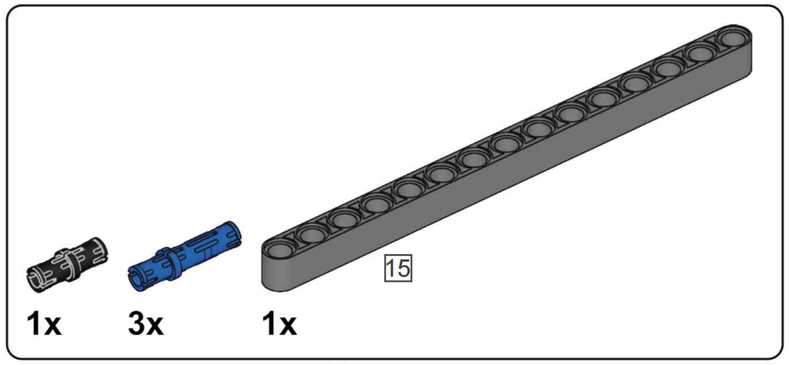

I67

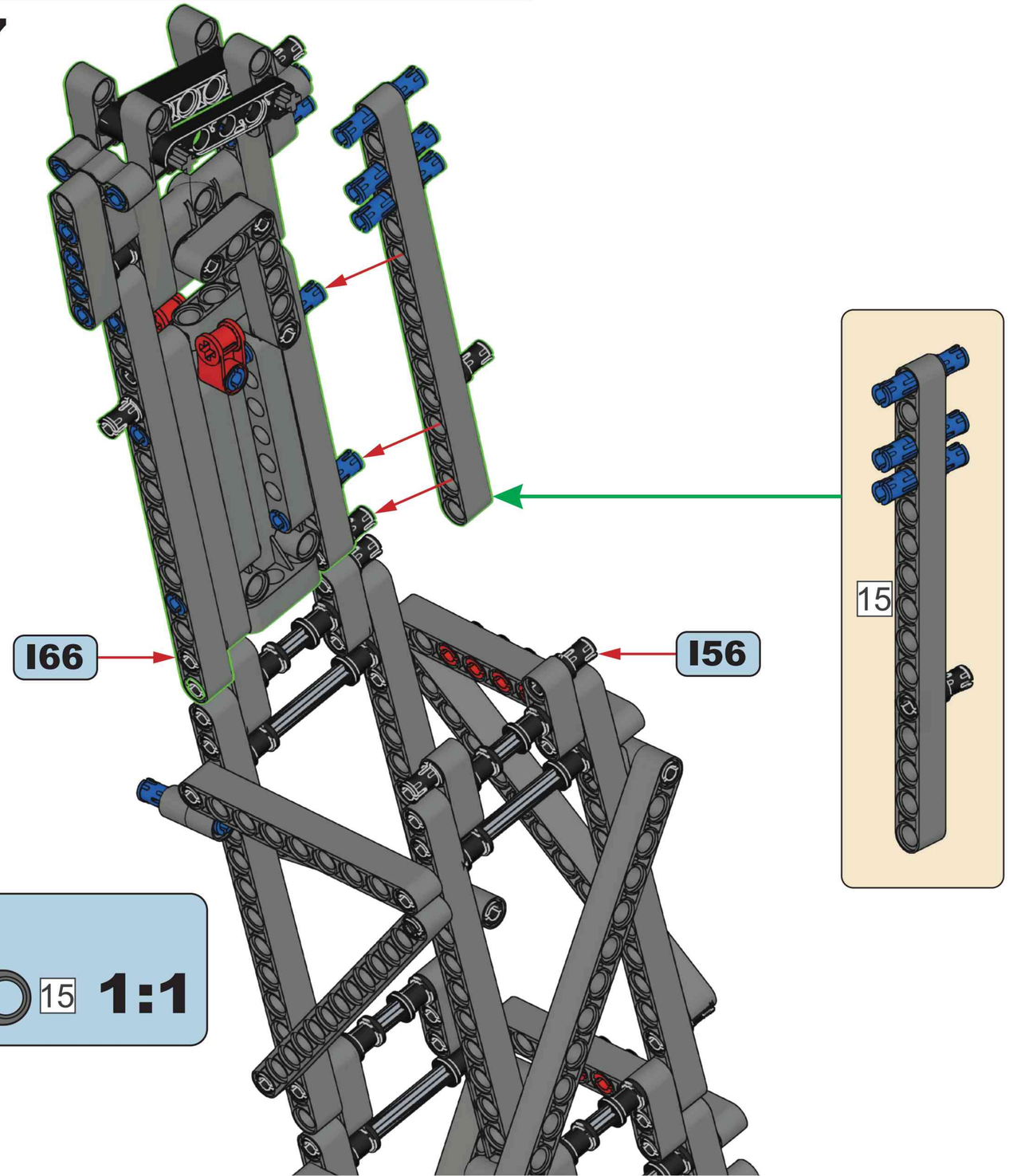

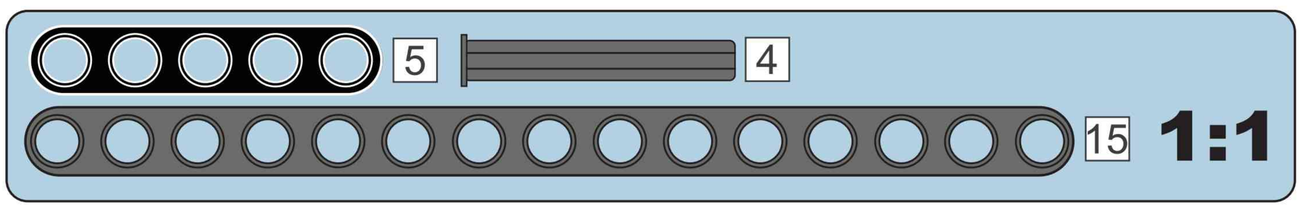

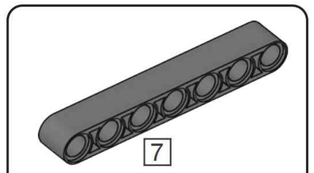

I68

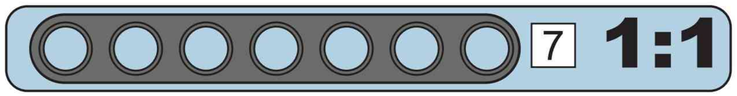

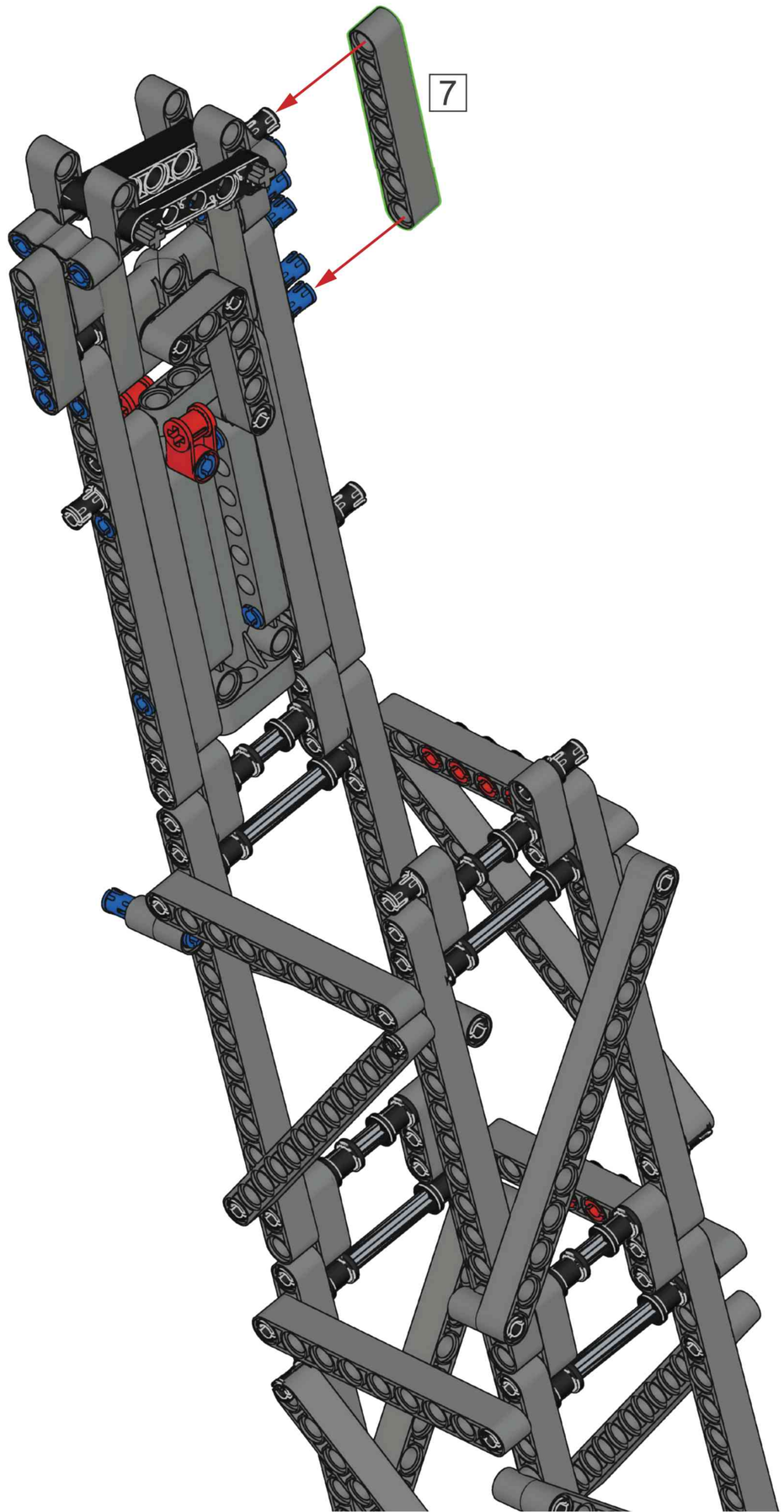

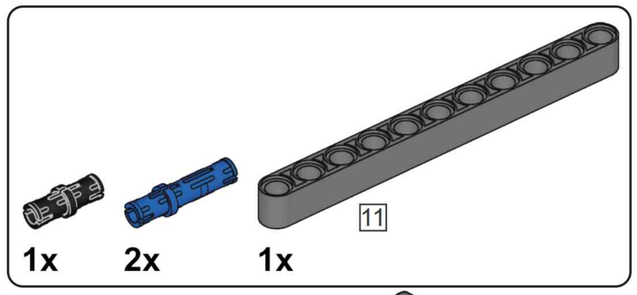

I69

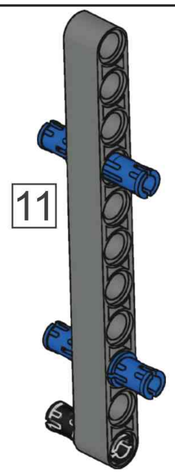

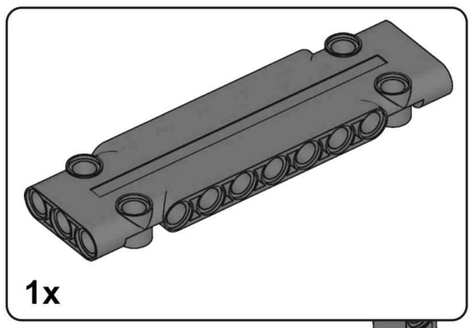

I70

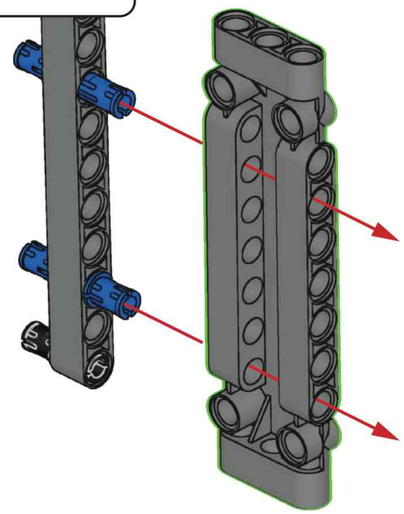

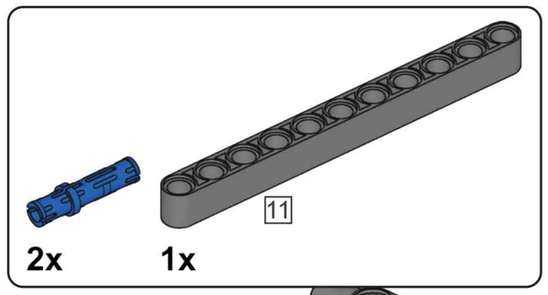

I71

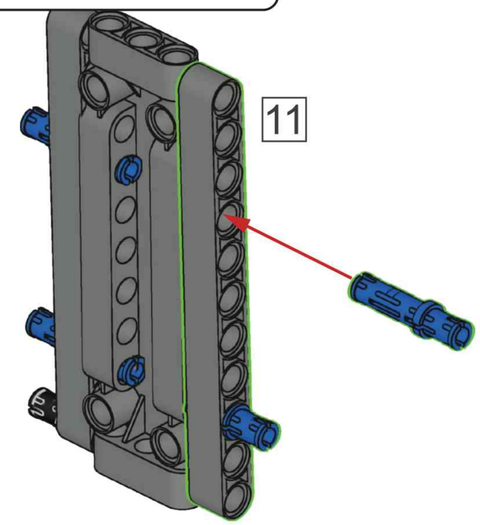

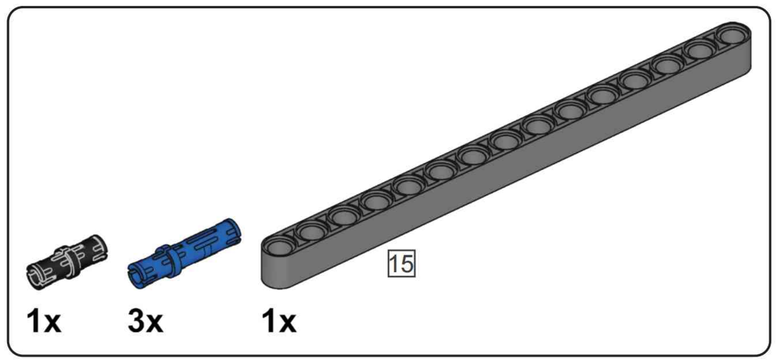

I72

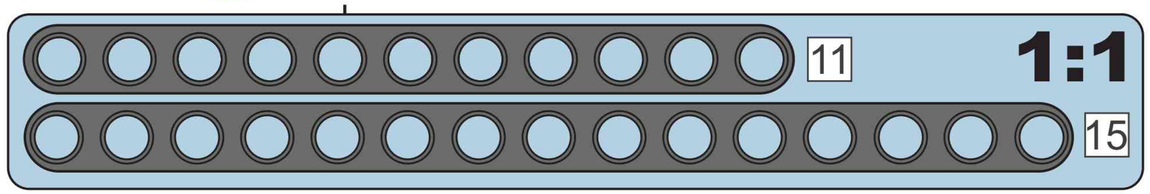

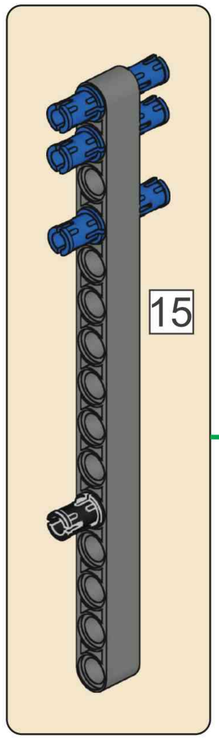

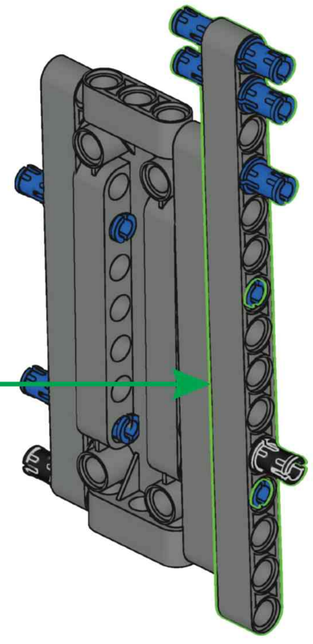

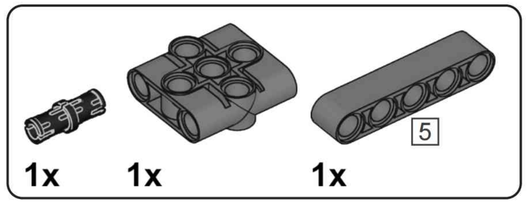

I73

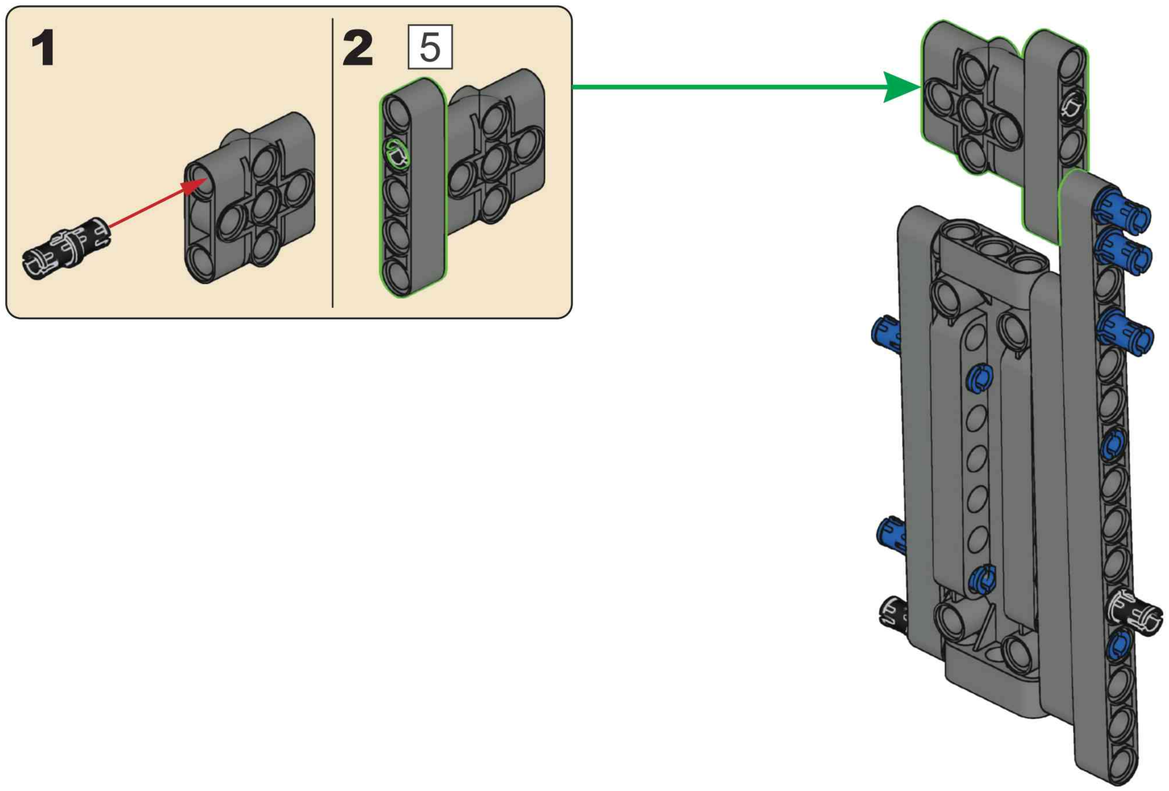

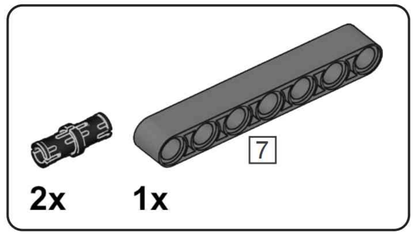

I74

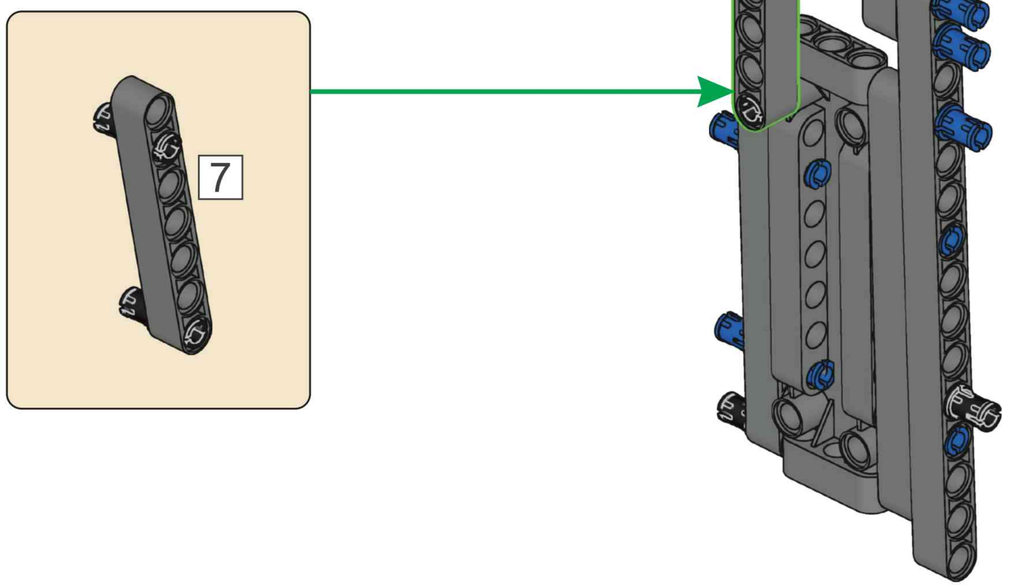

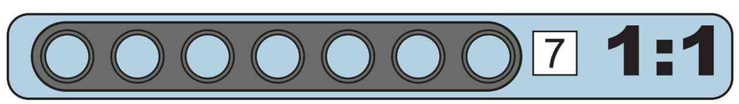

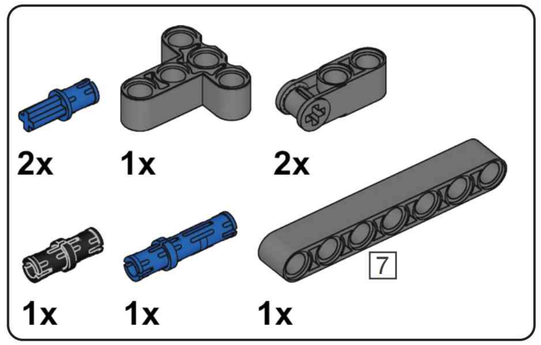

I75

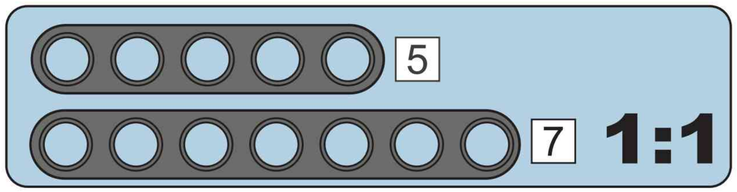

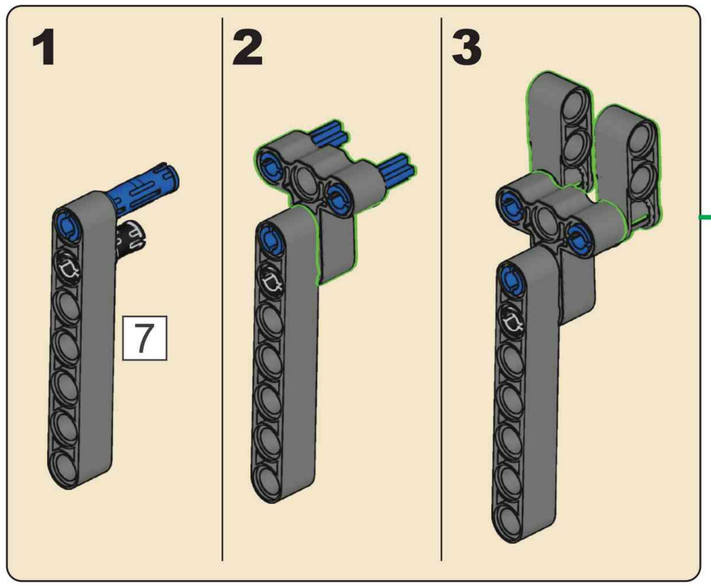

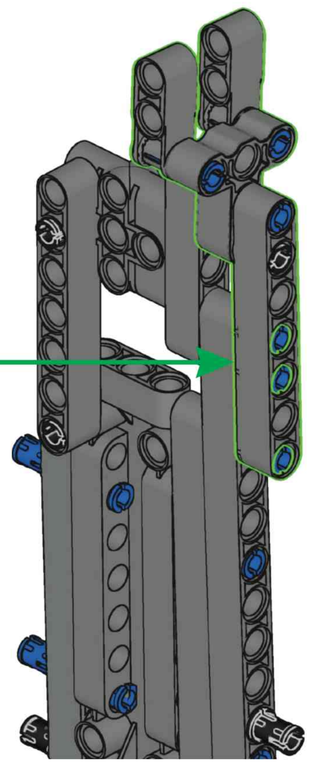

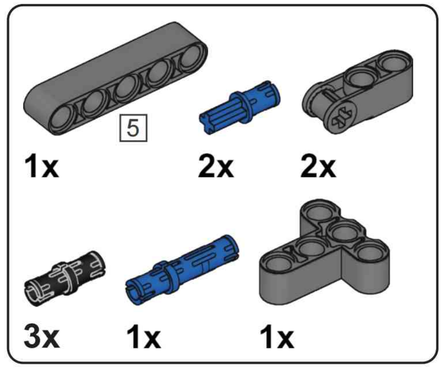

I76

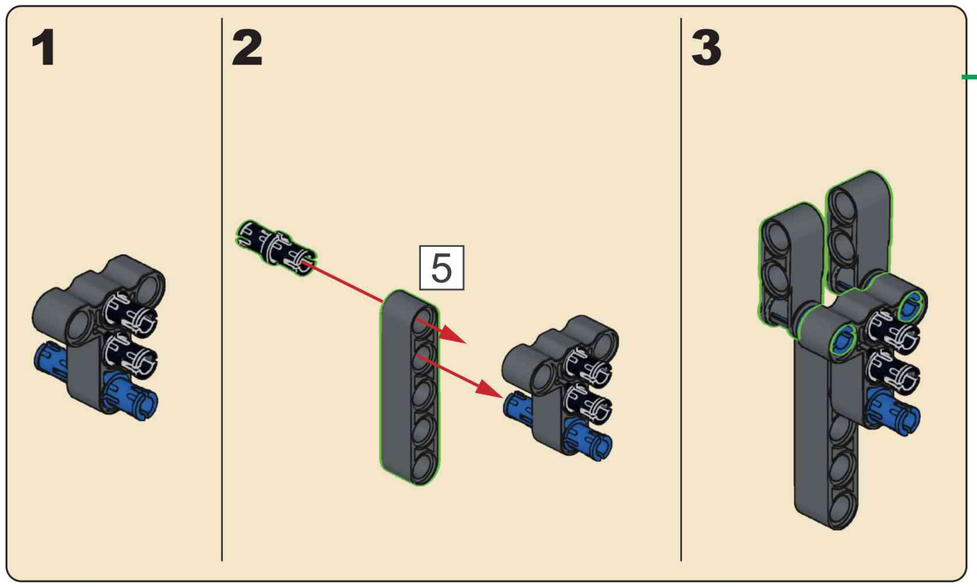

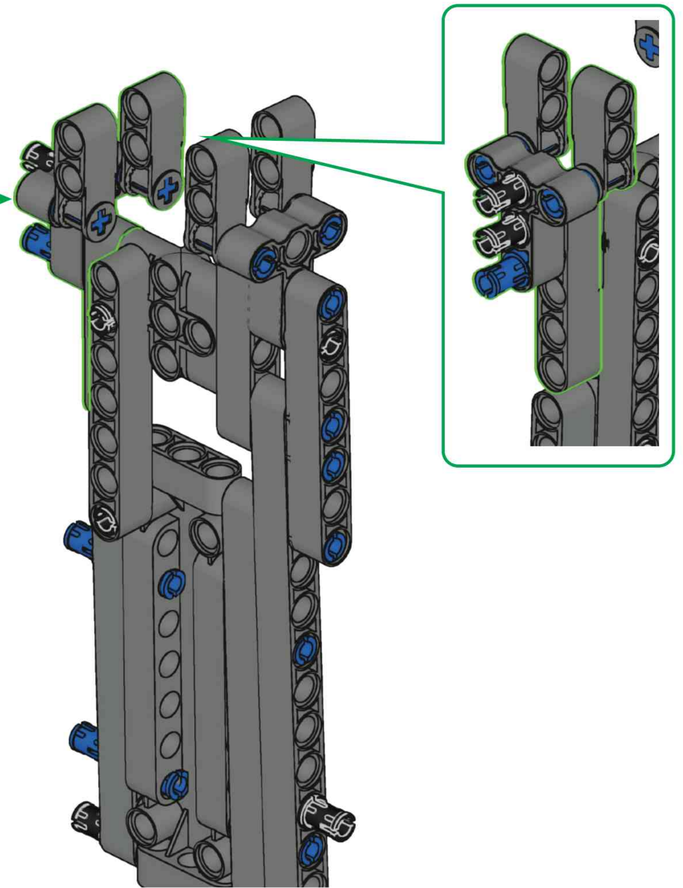

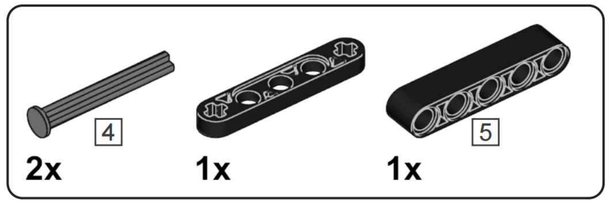

I77

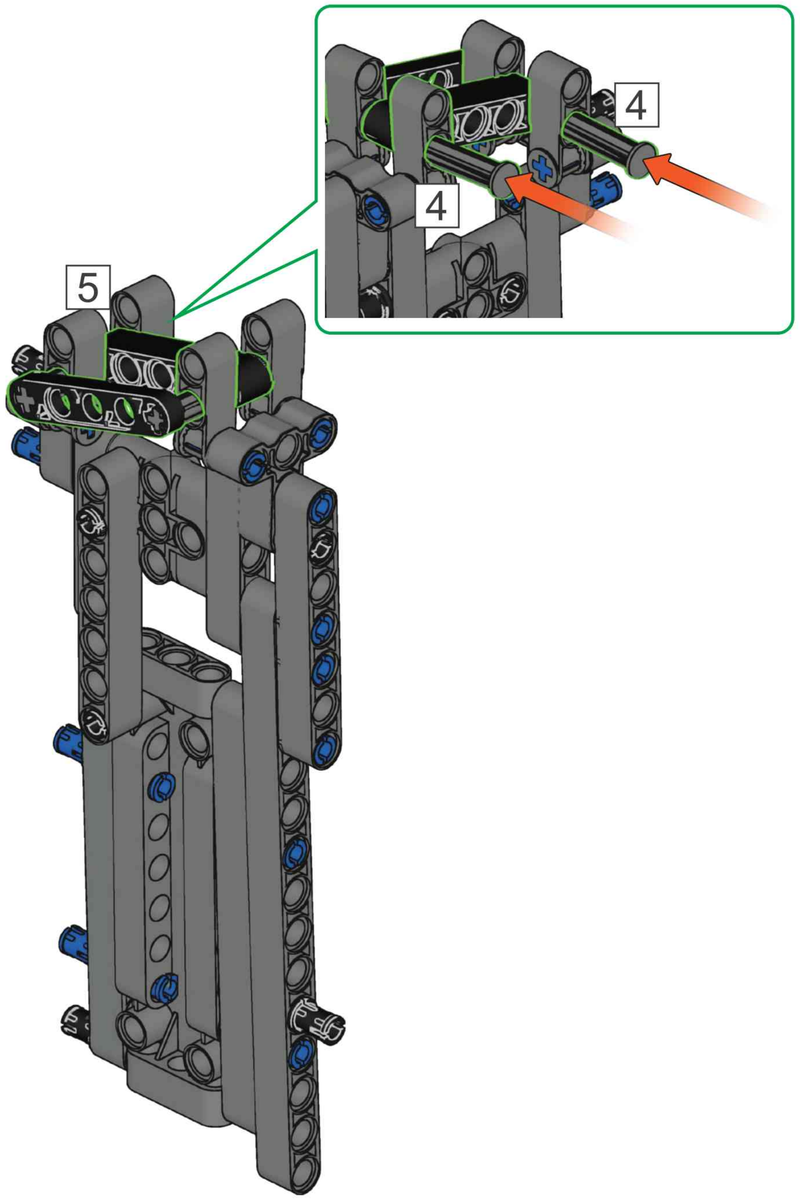

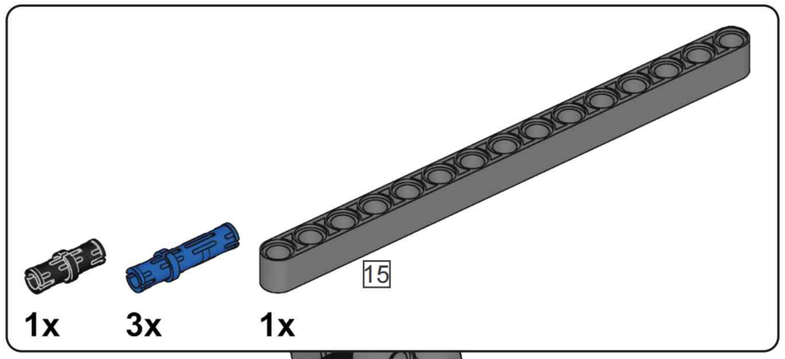

I78

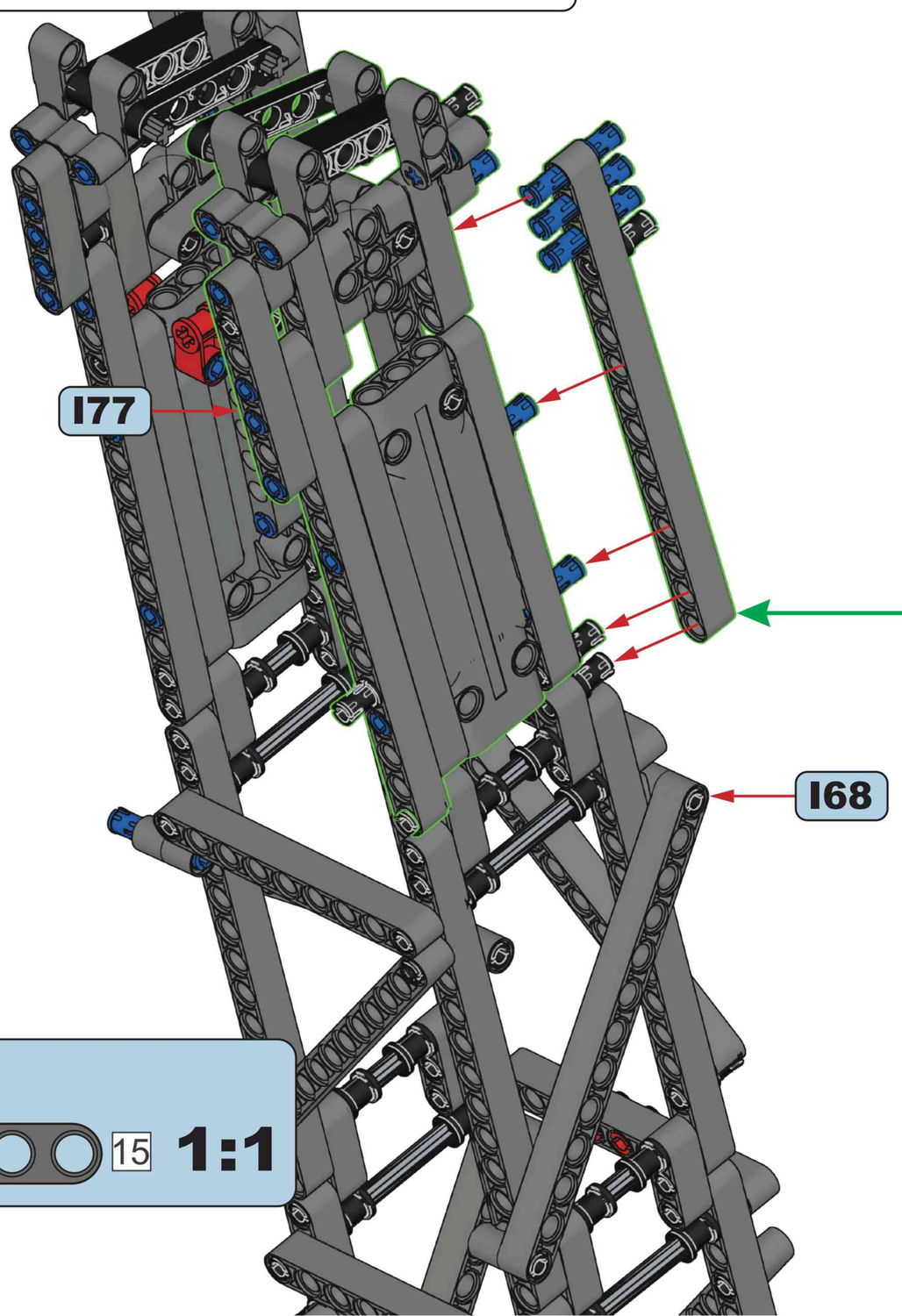

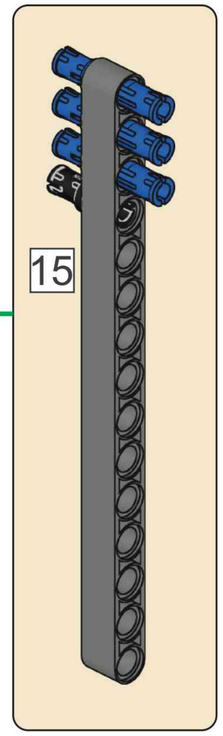

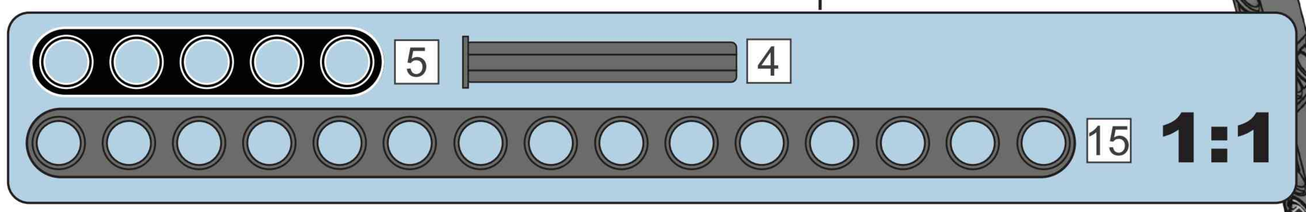

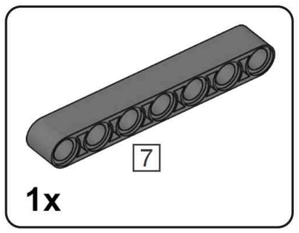

I79

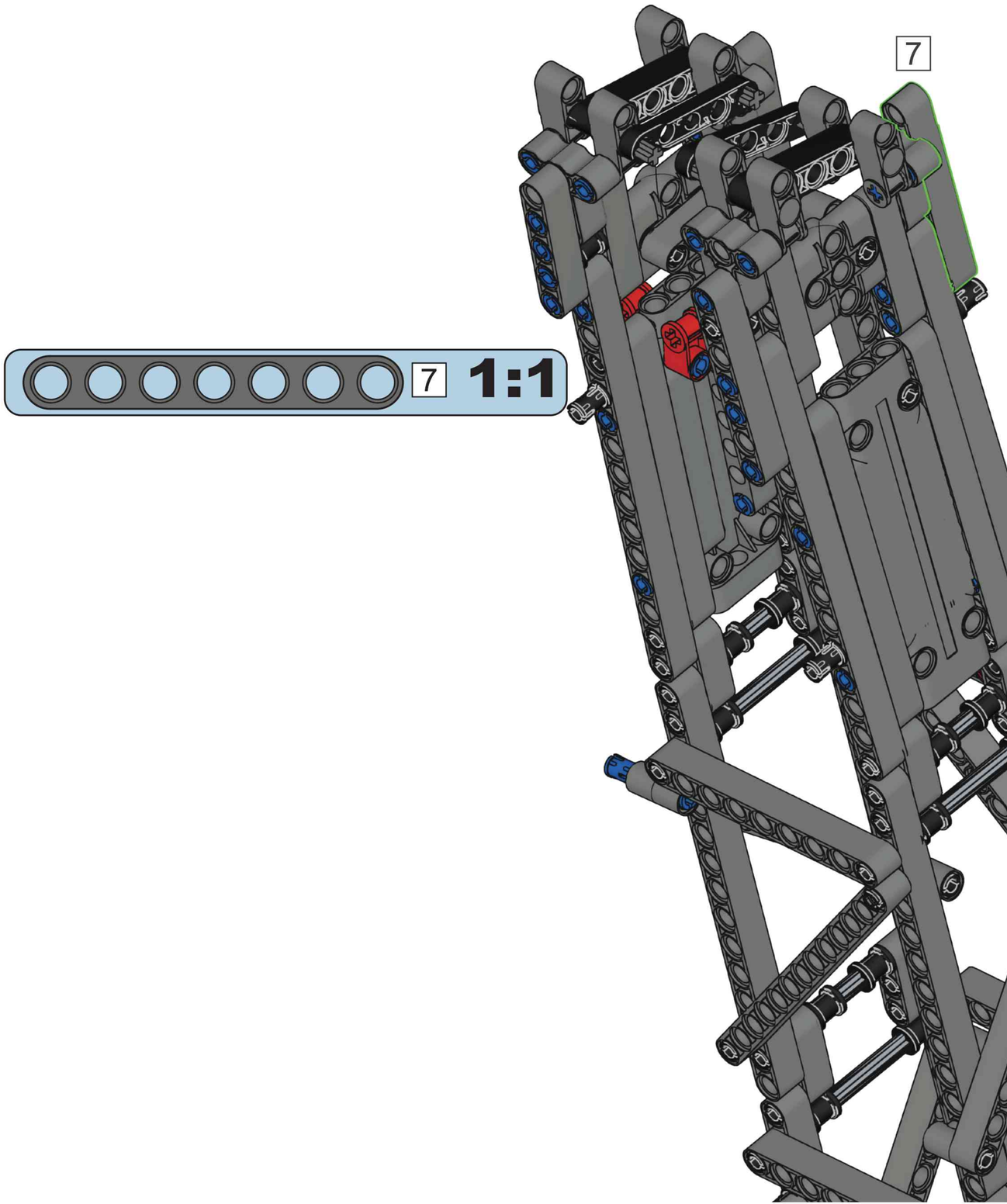

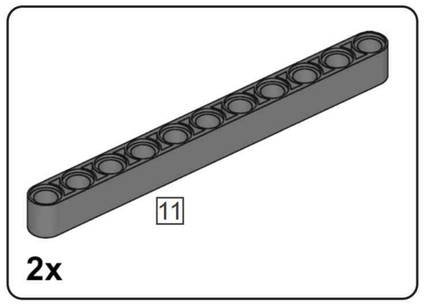

I80

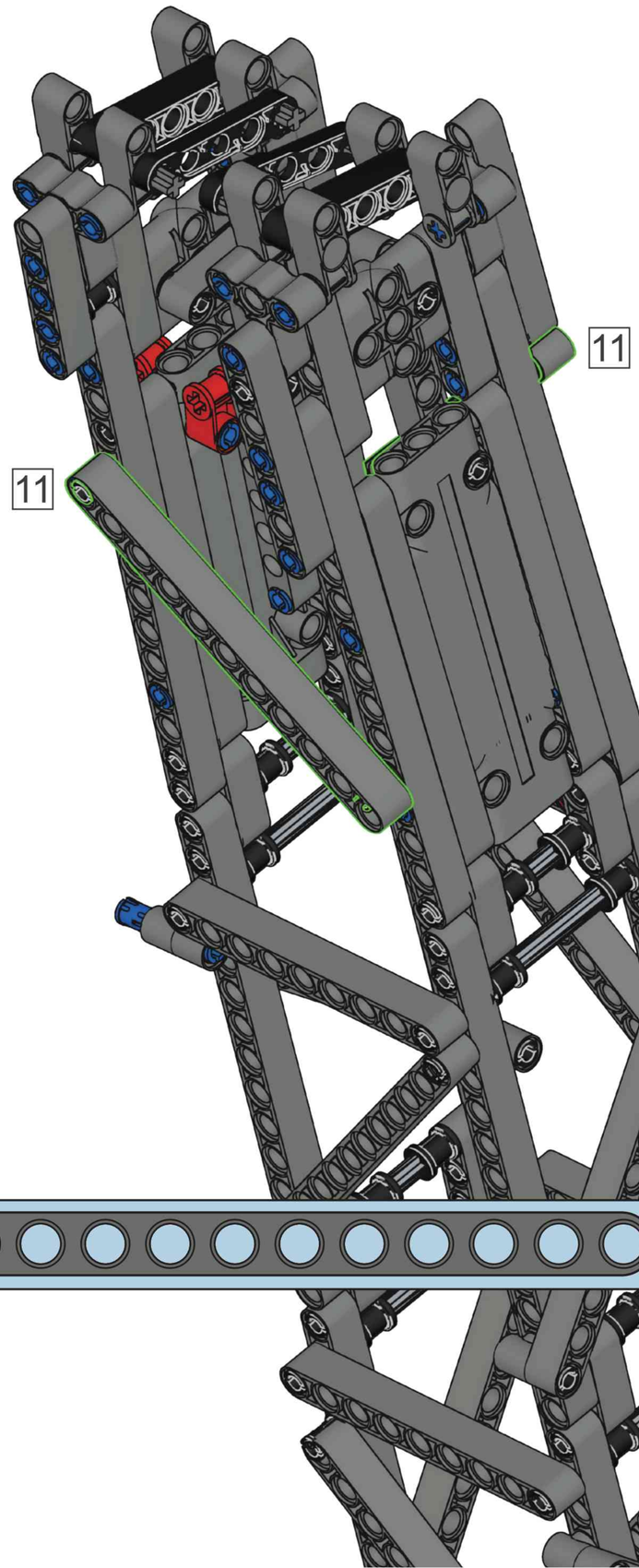

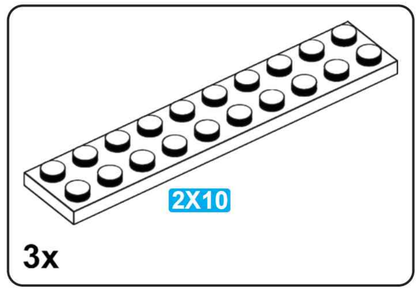

I81

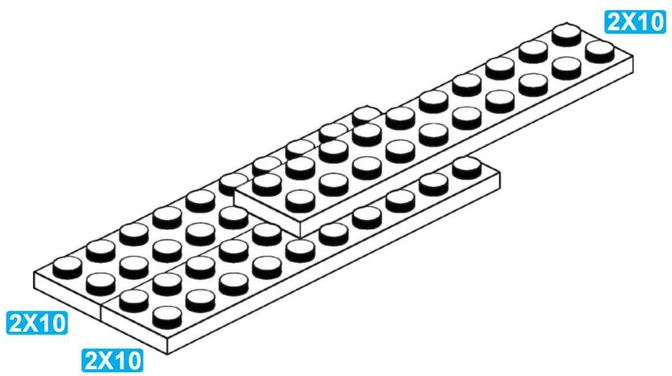

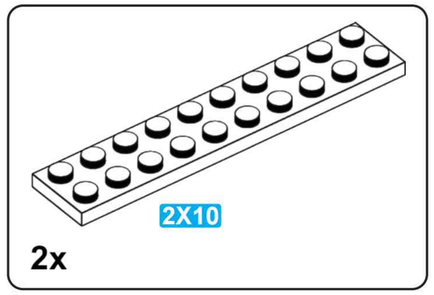

I82

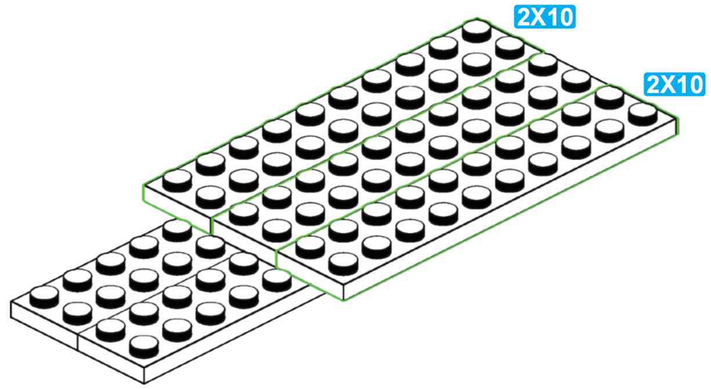

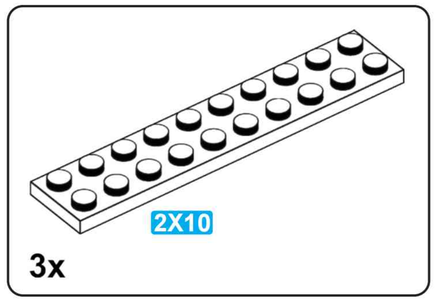

I83

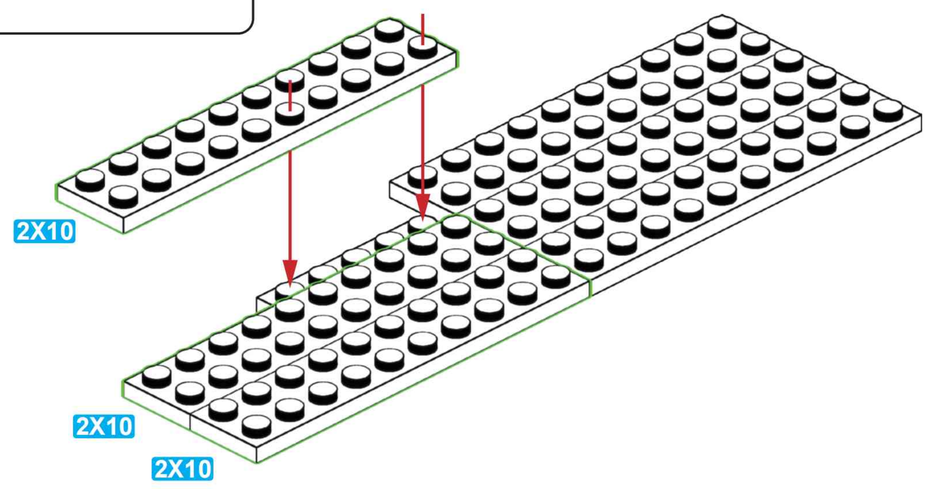

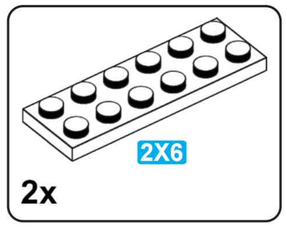

I84

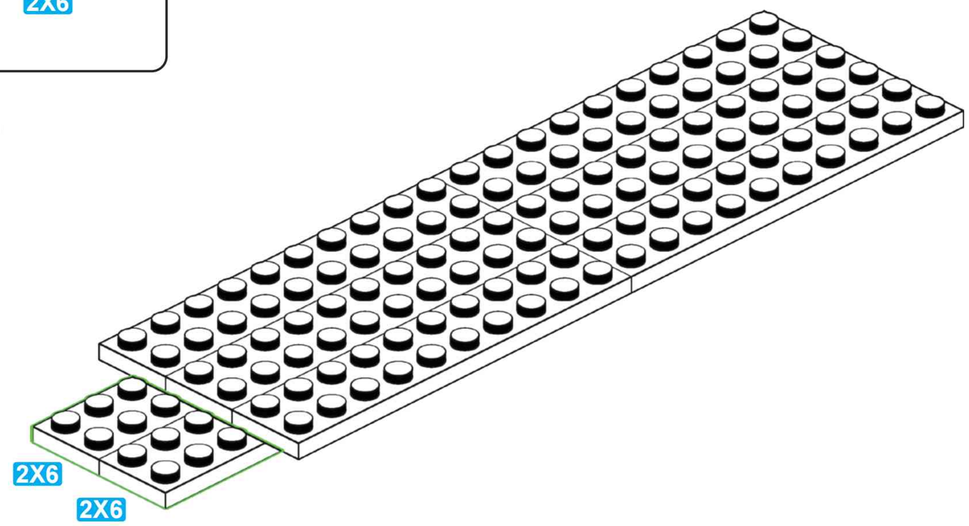

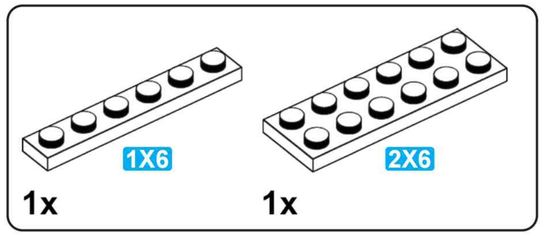

I85

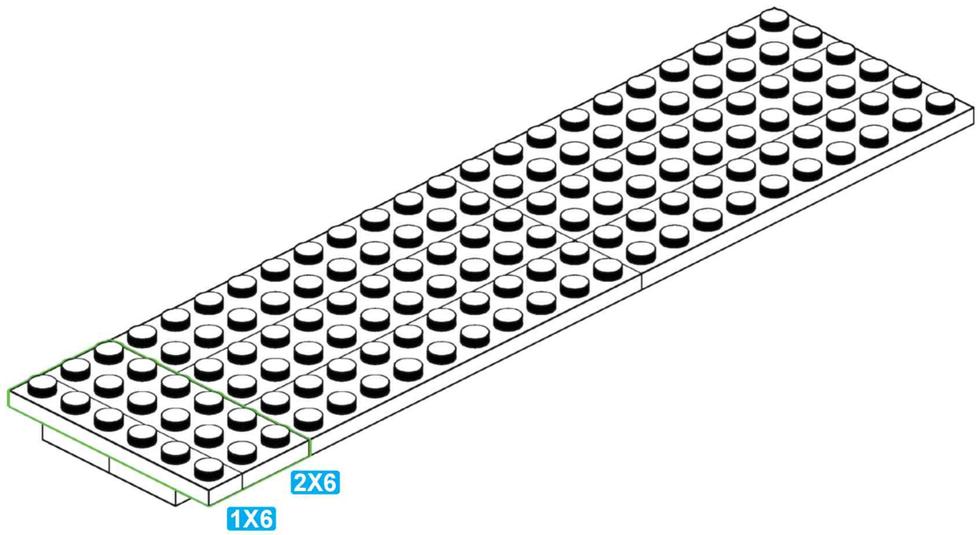

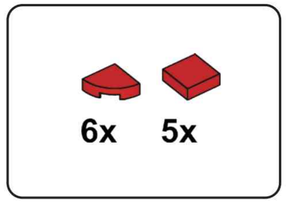

I86

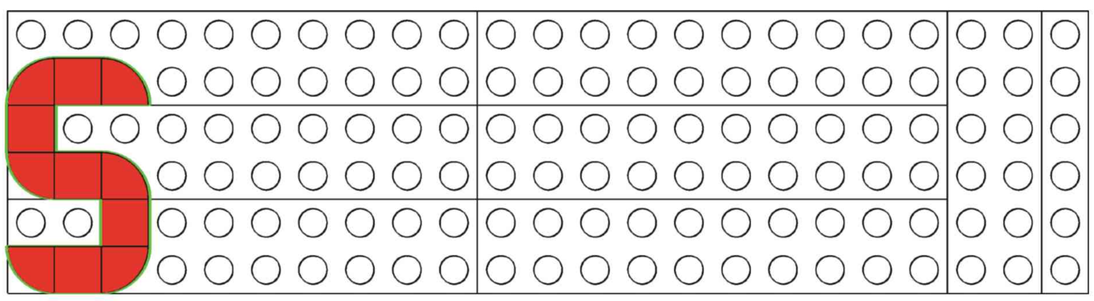

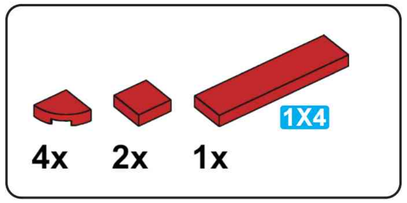

I87

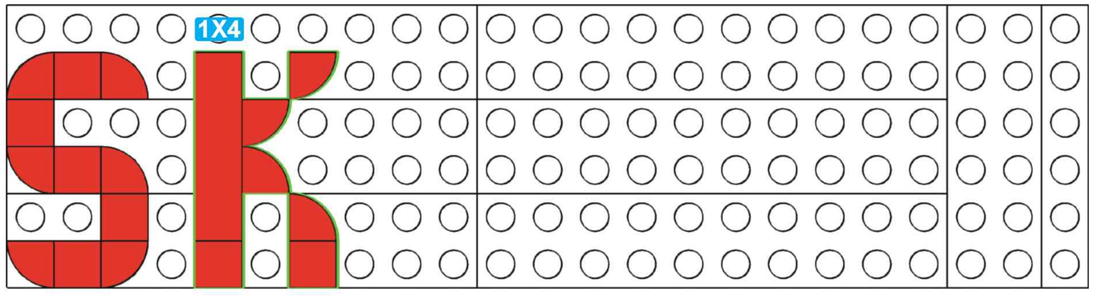

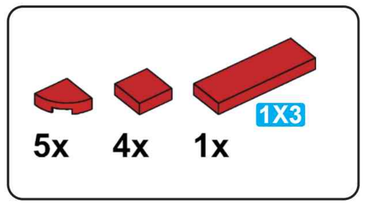

I88

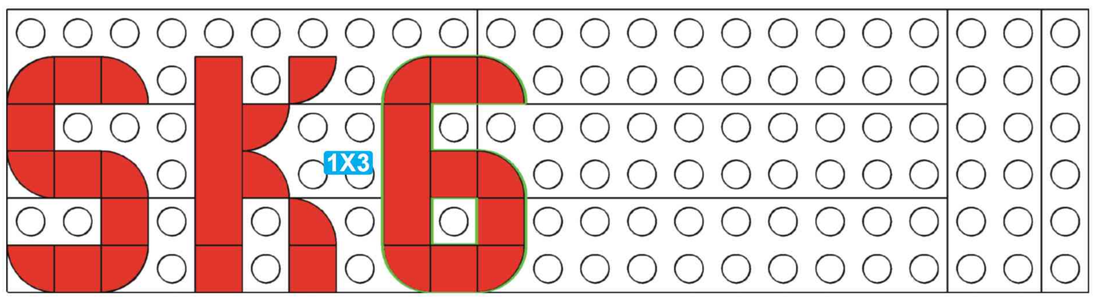

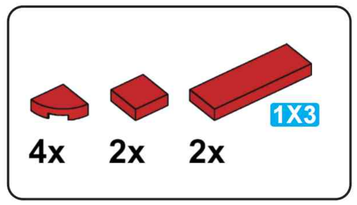

I89

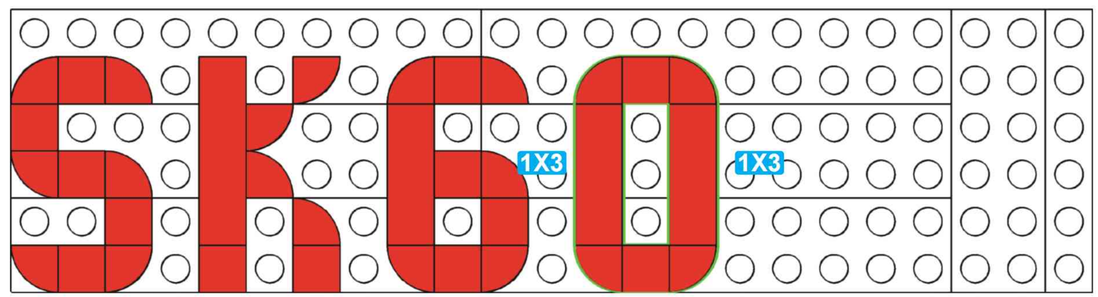

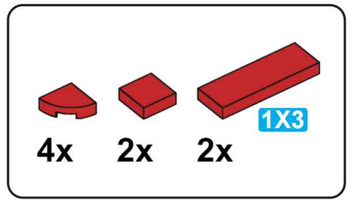

I90

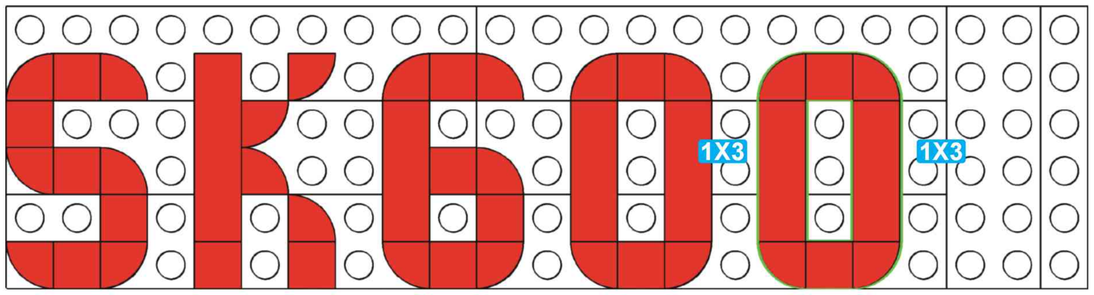

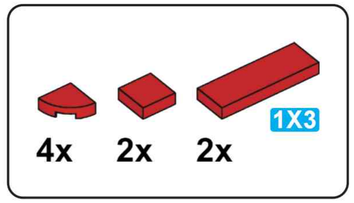

I91

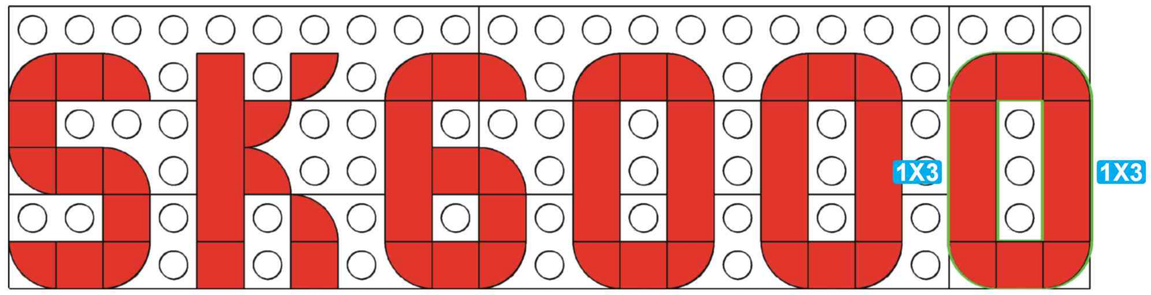

I92

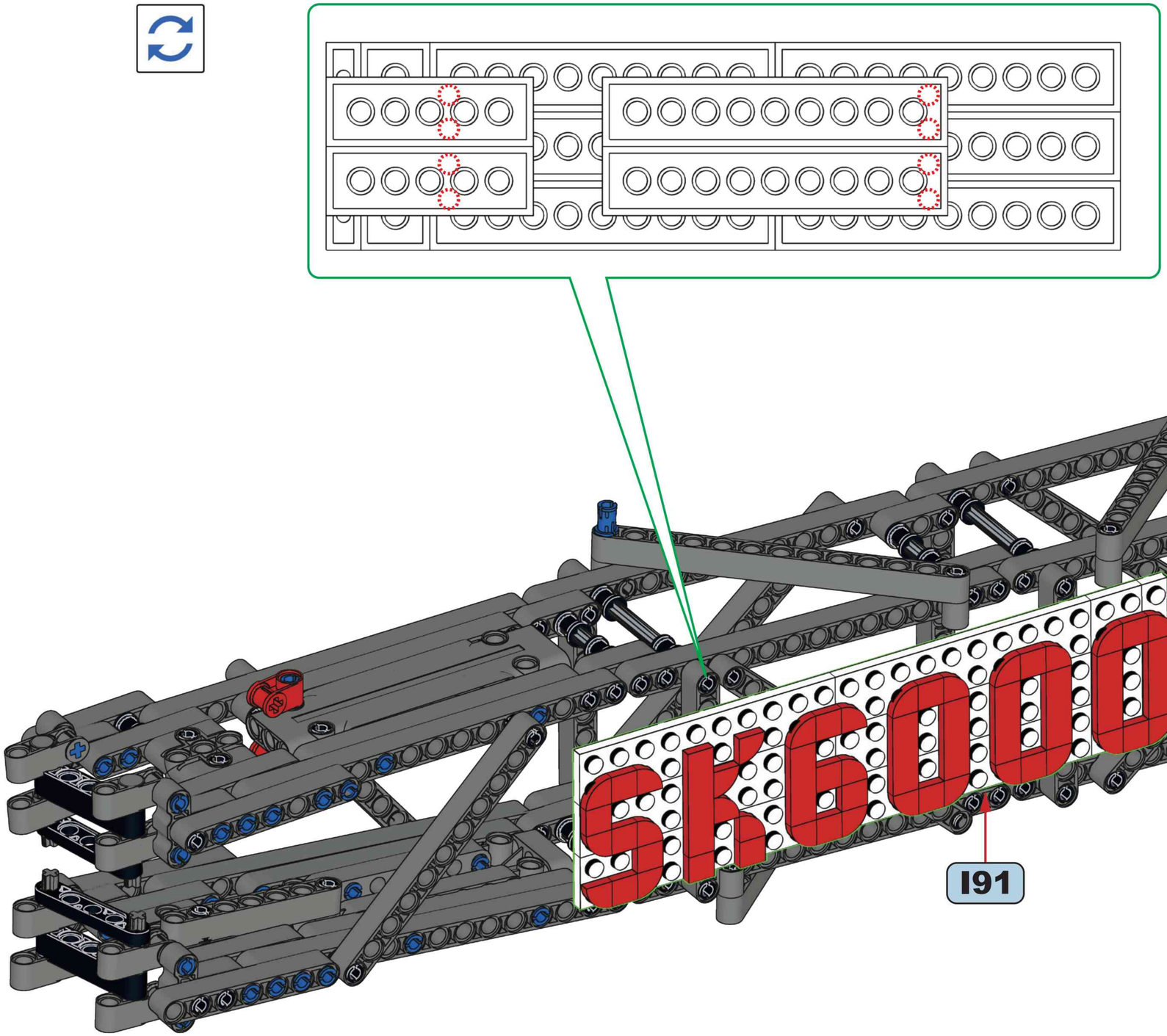

10

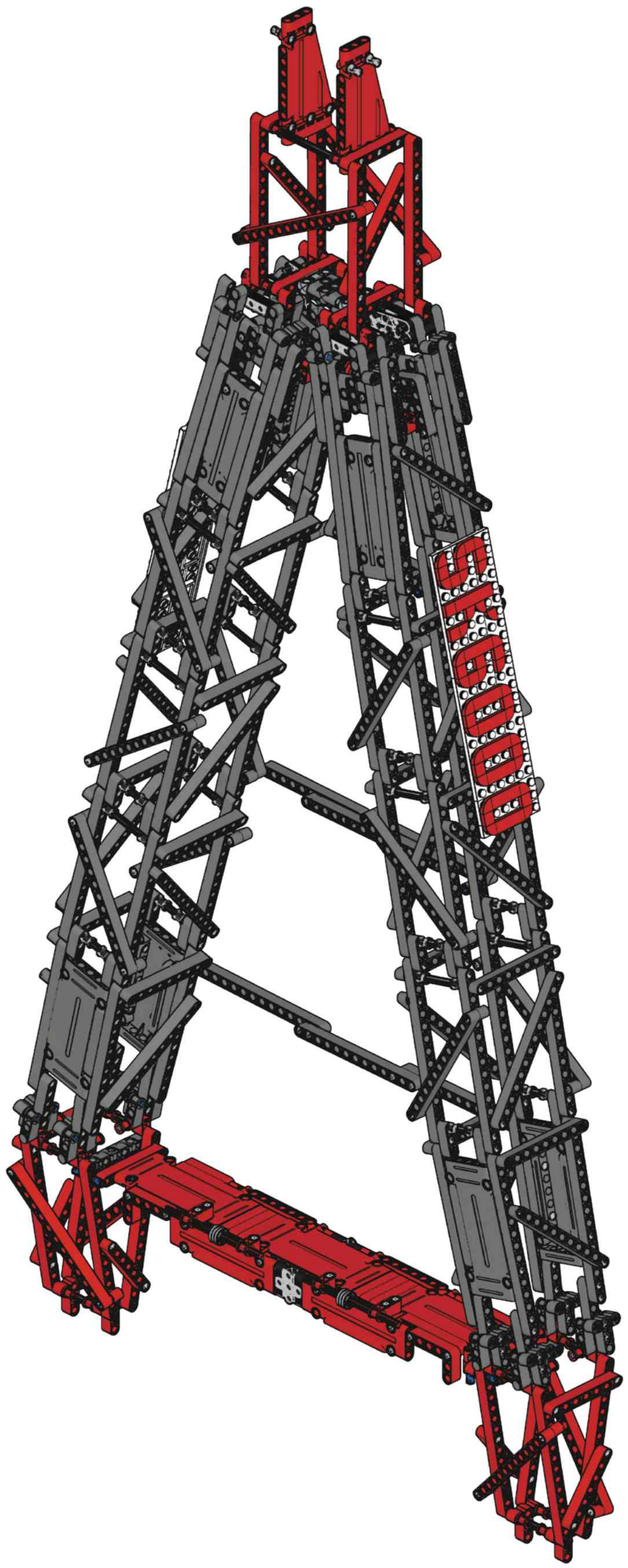

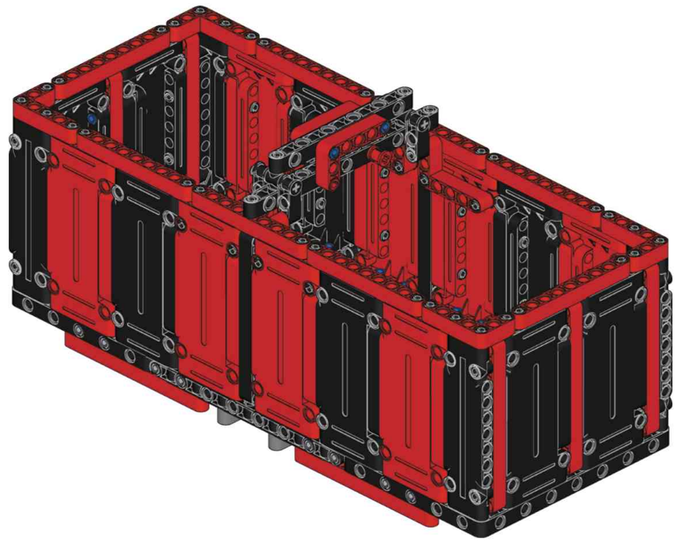

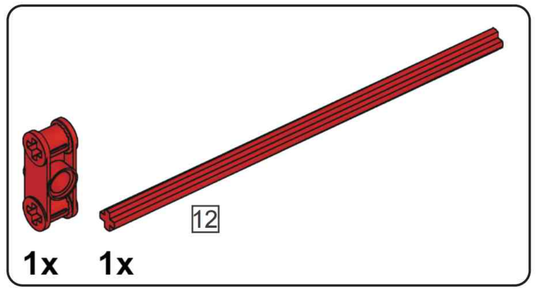

J1

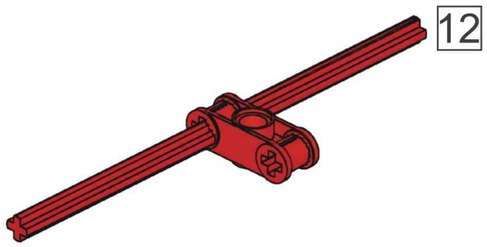

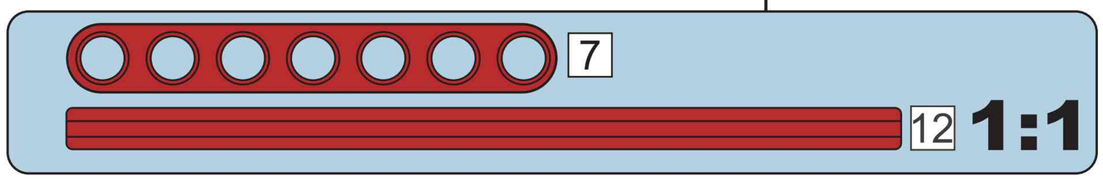

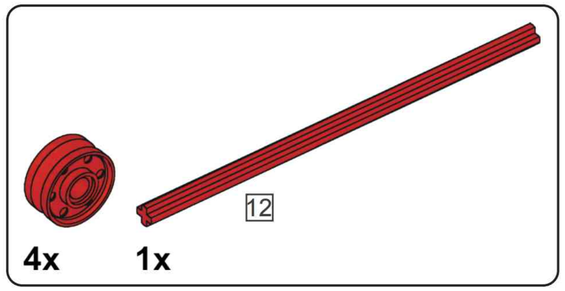

J2

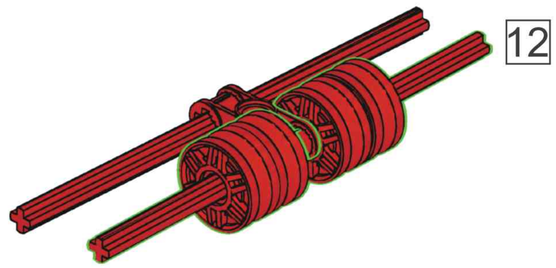

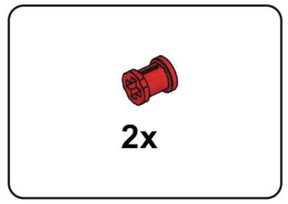

J3

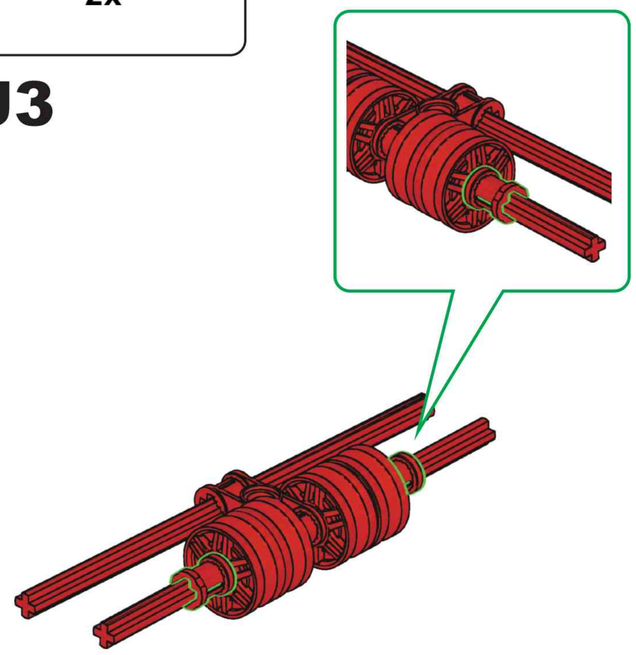

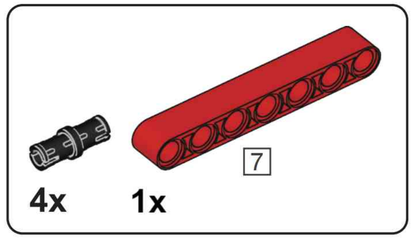

J4

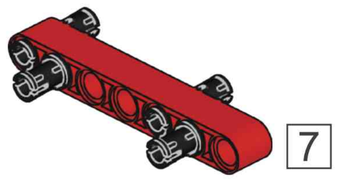

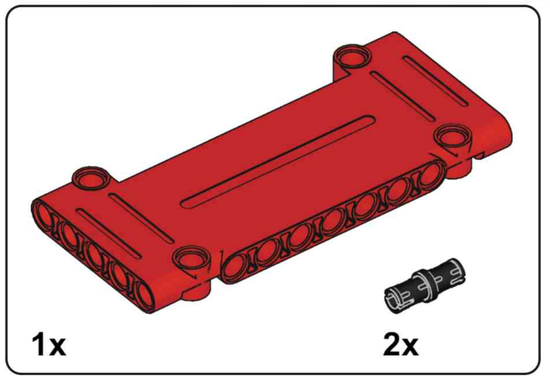

J5

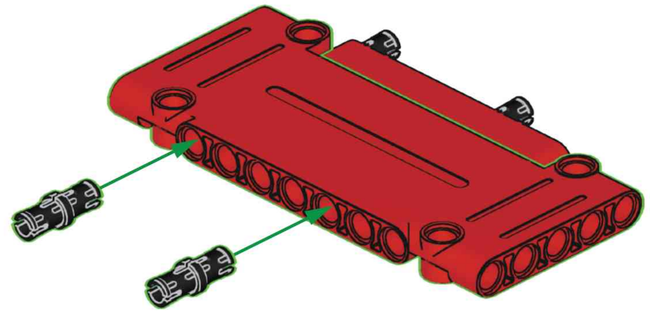

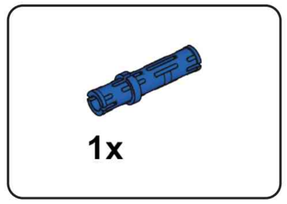

J6

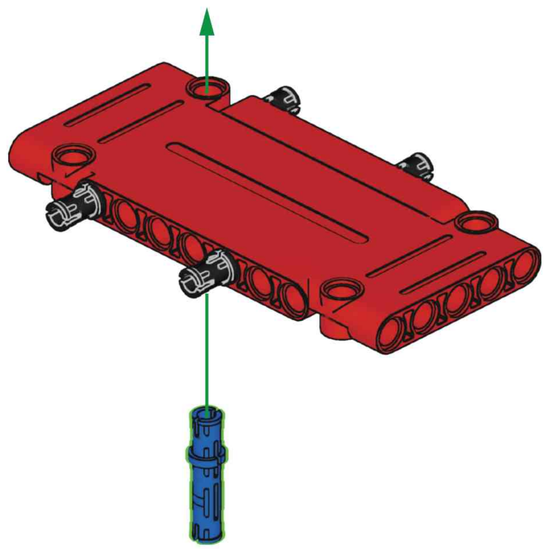

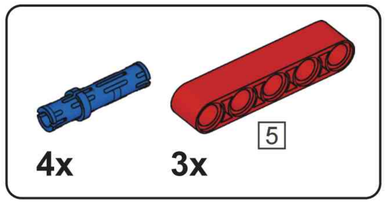

J7

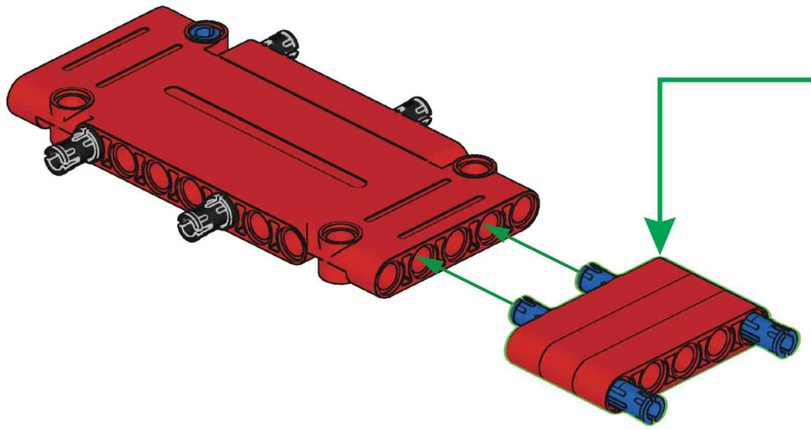

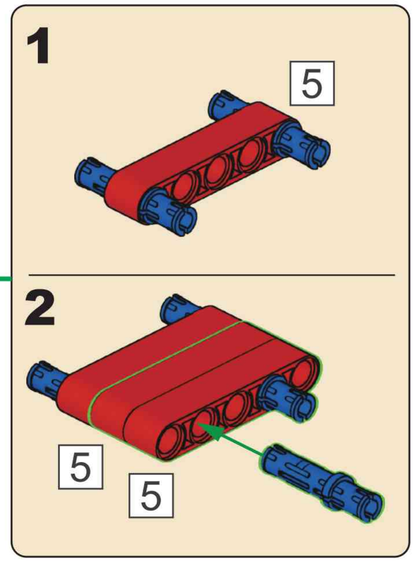

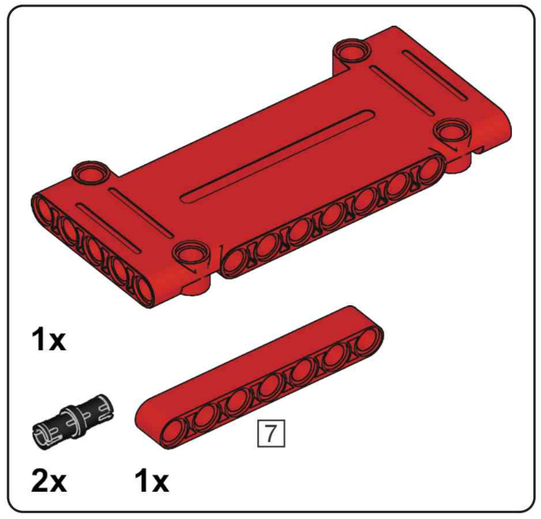

J8

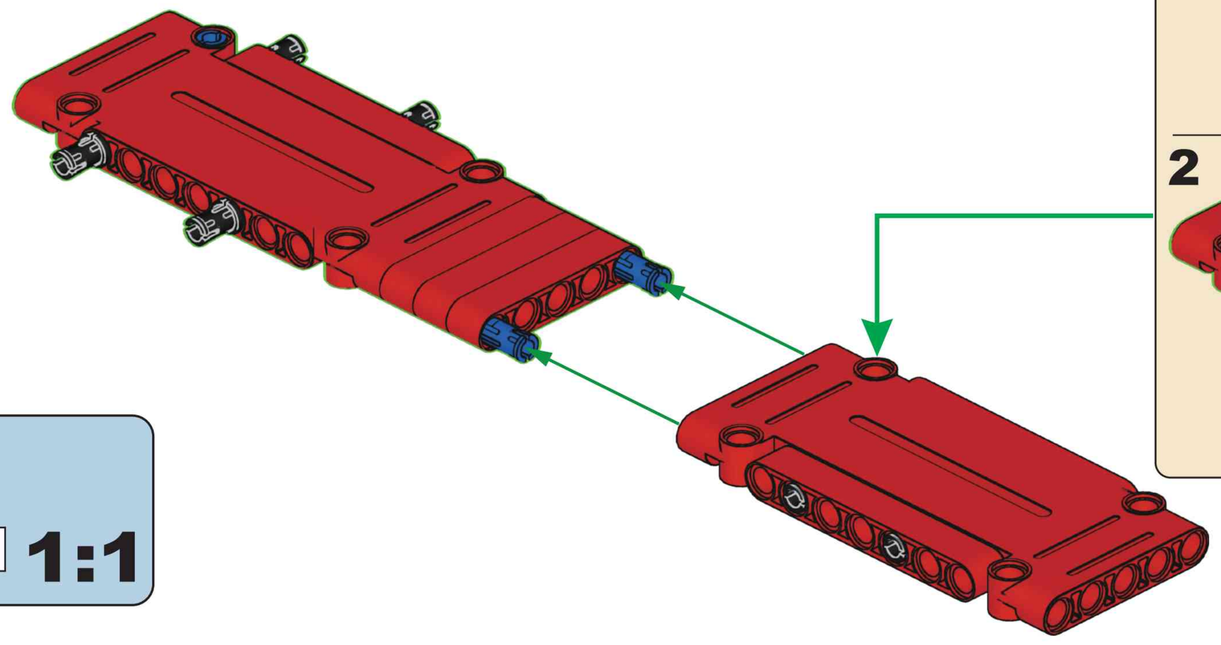

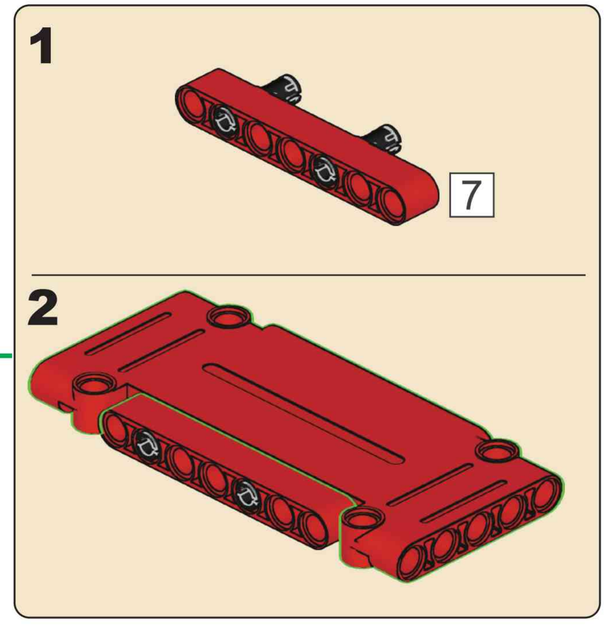

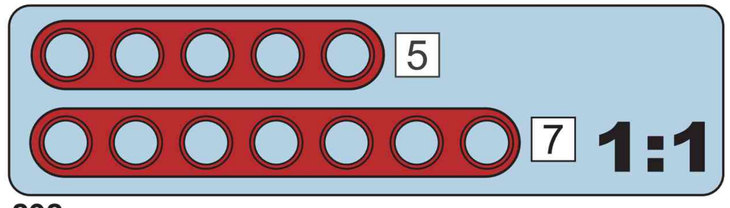

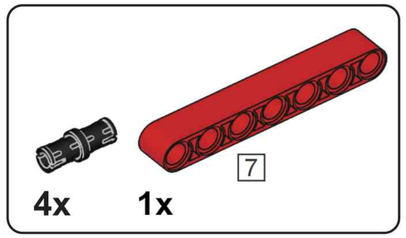

J9

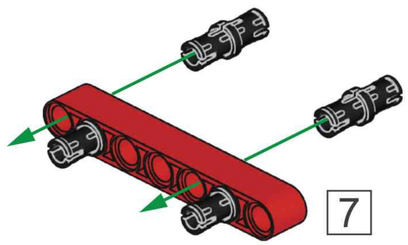

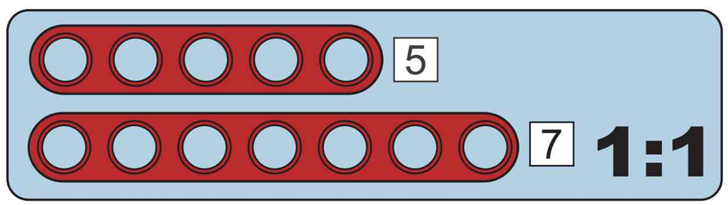

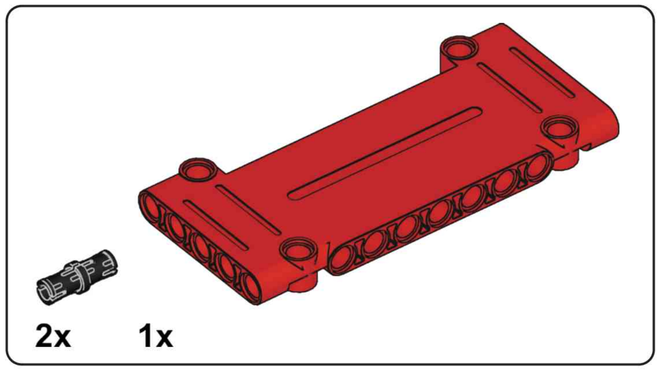

J10

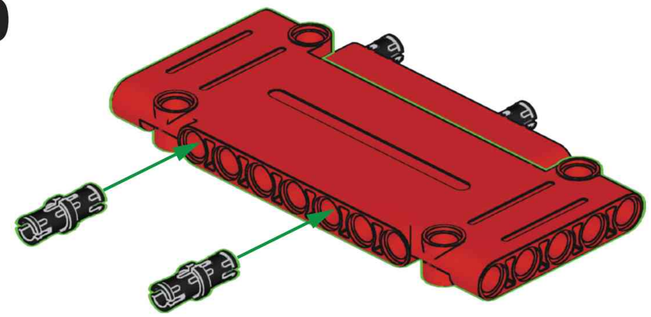

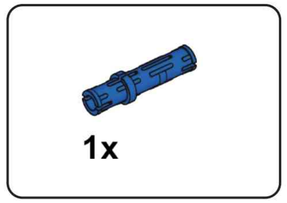

J11

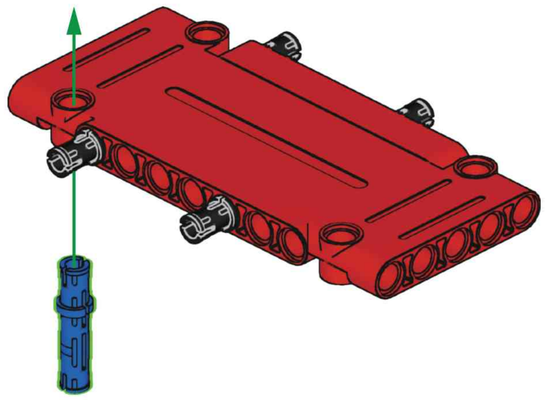

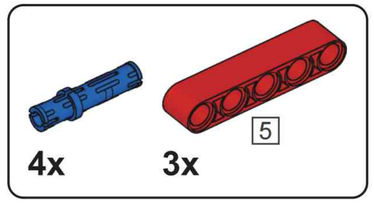

J12

J13

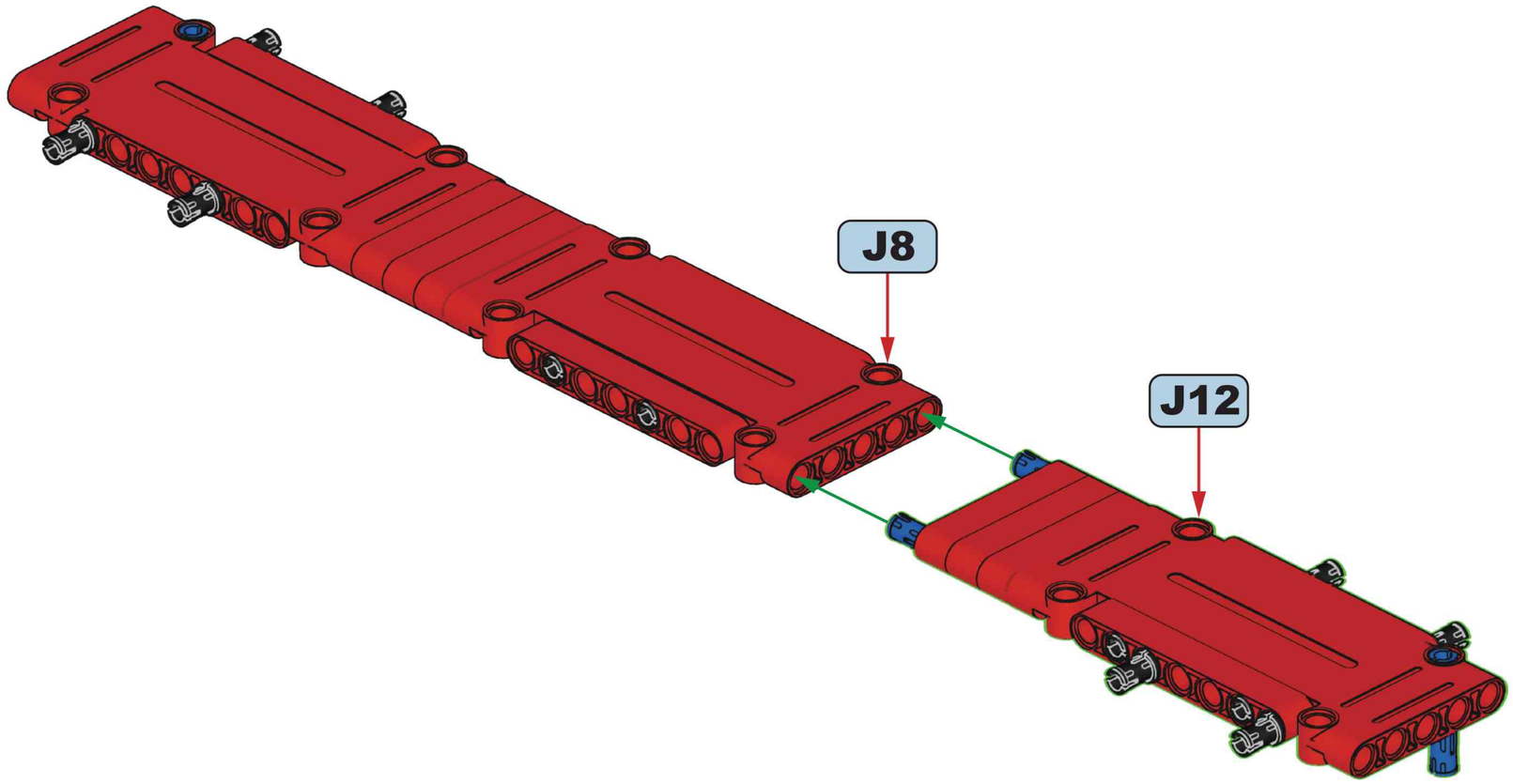

J14

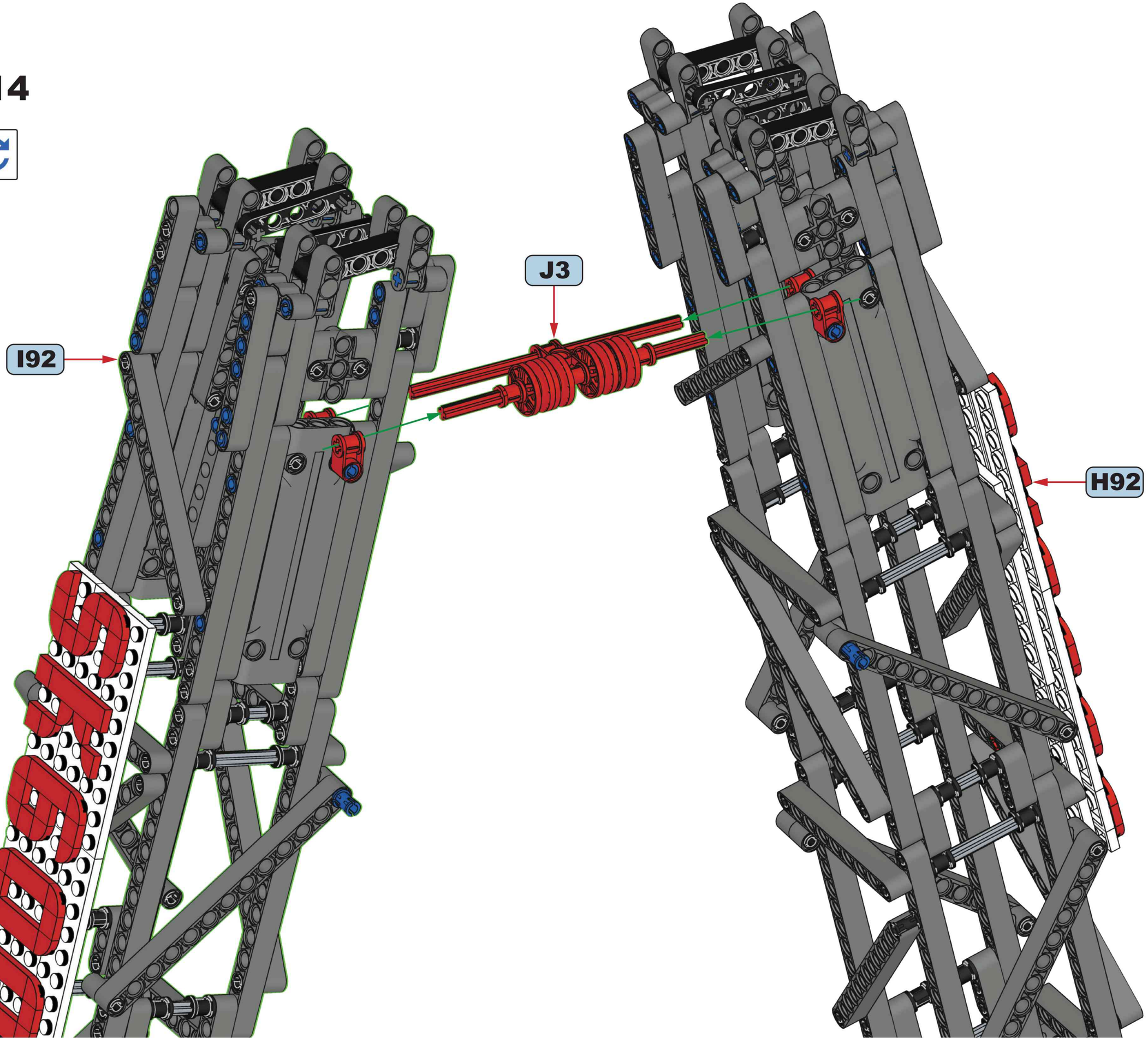

J15

J14

J13

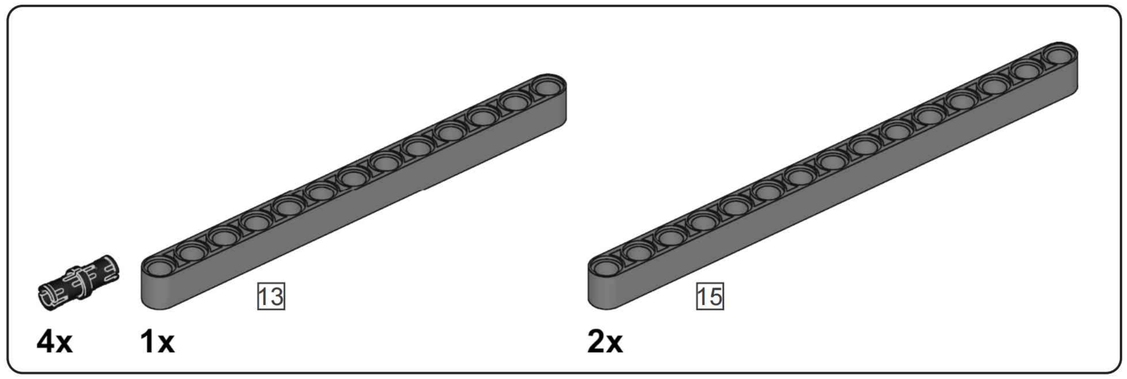

J16

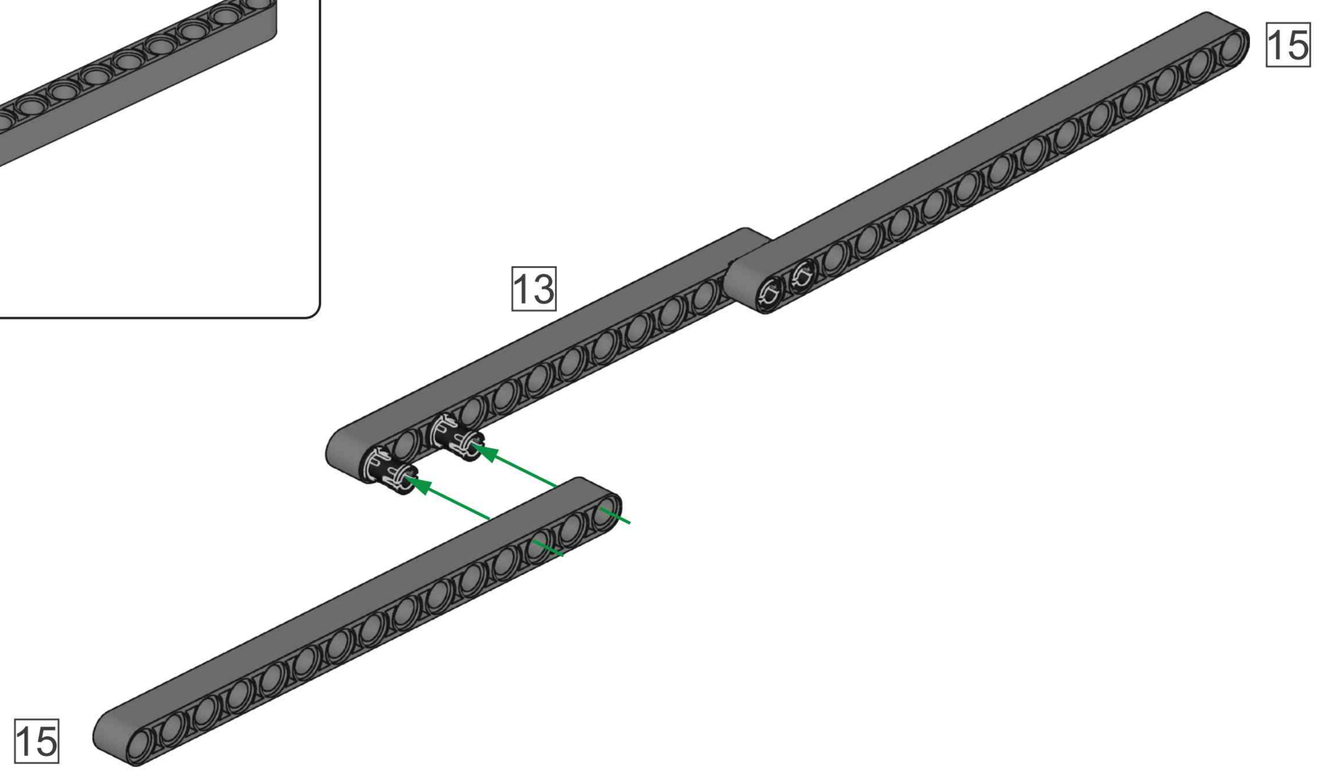

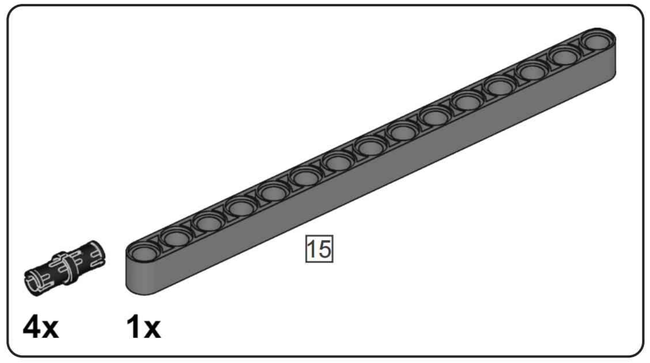

J17

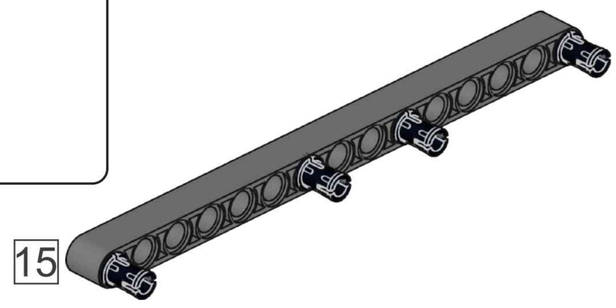

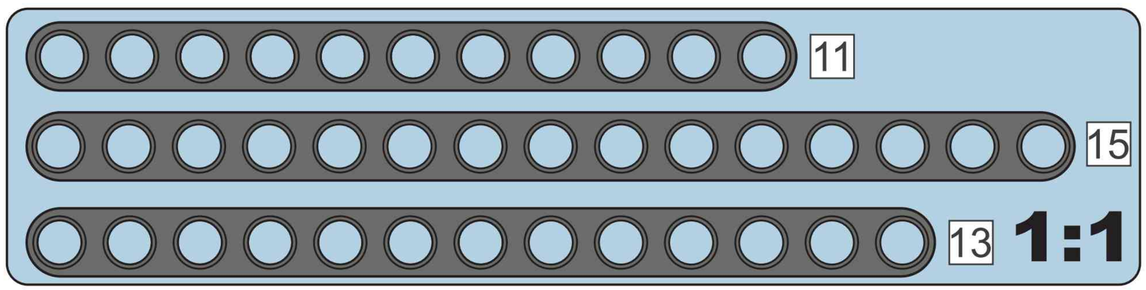

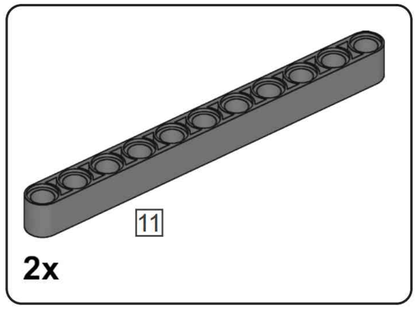

J18

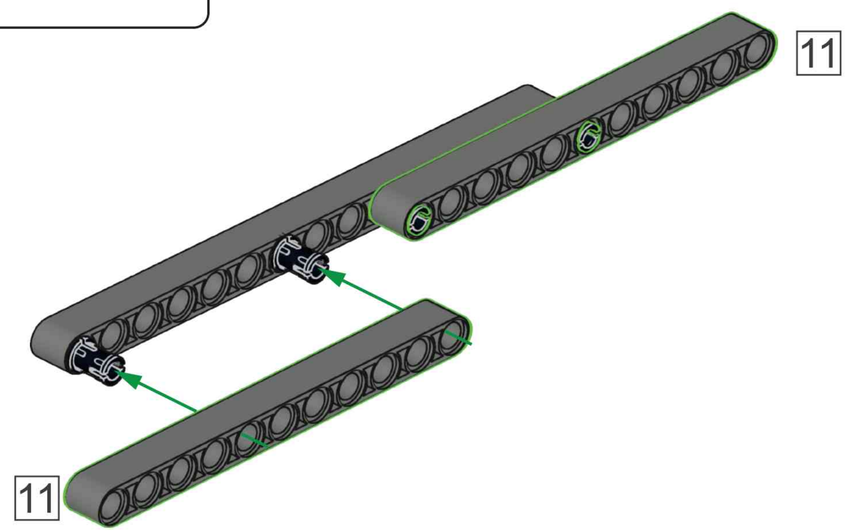

J19

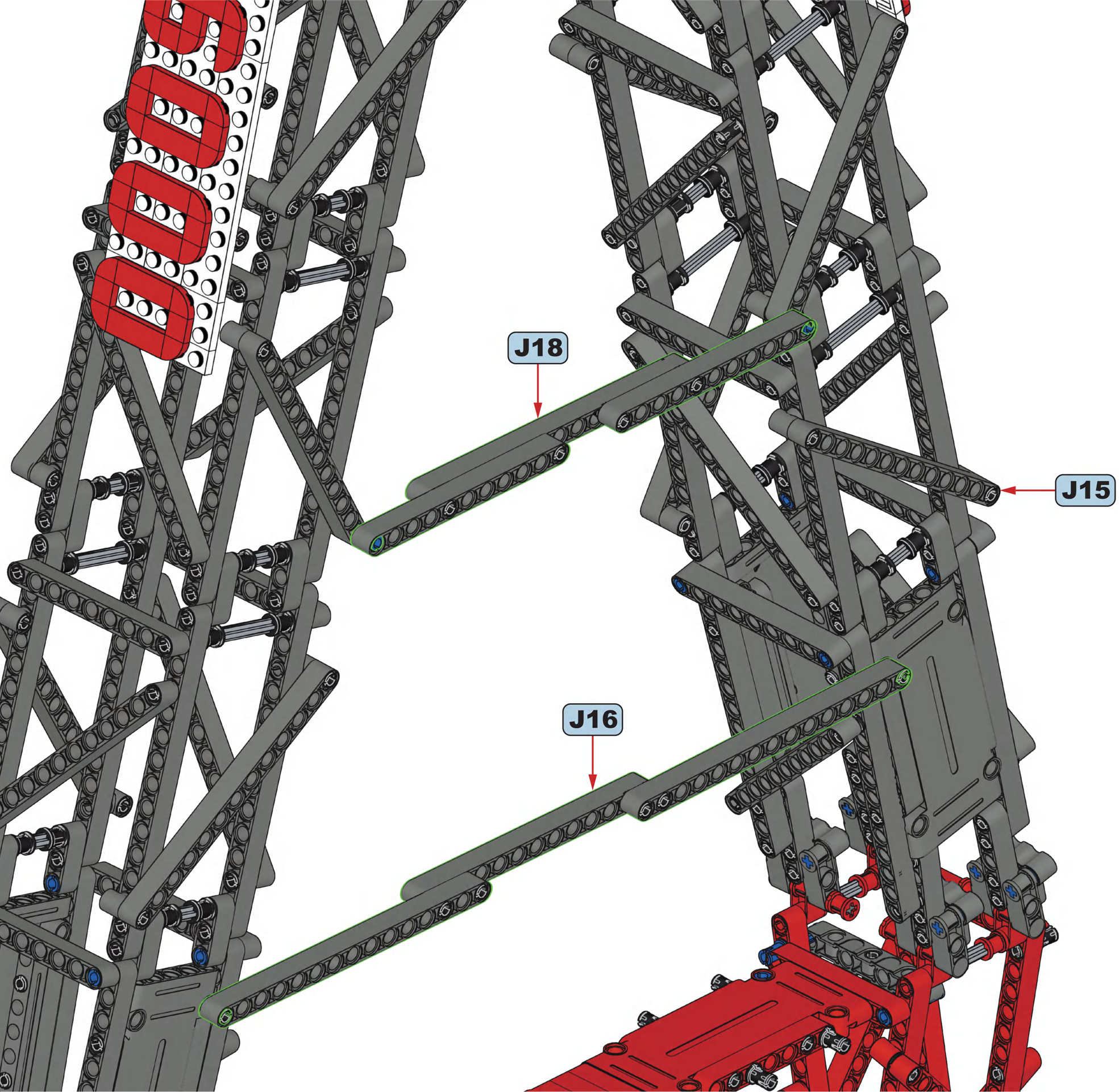

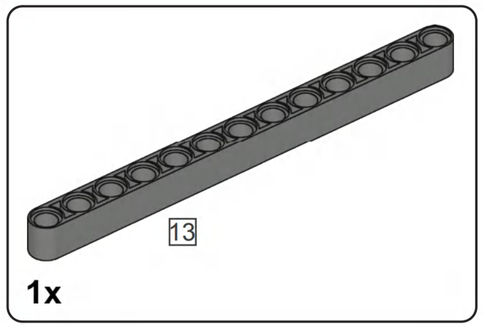

J20

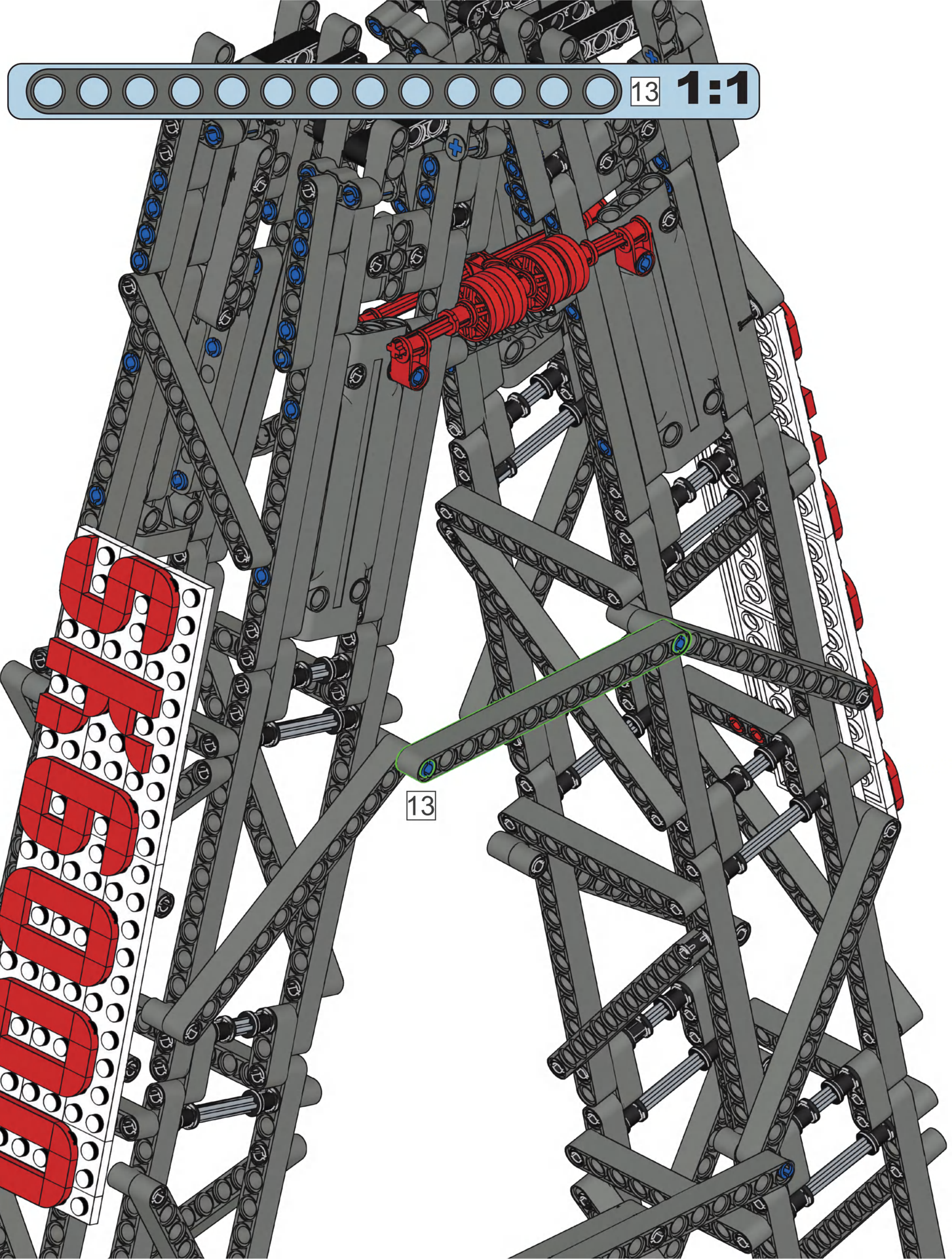

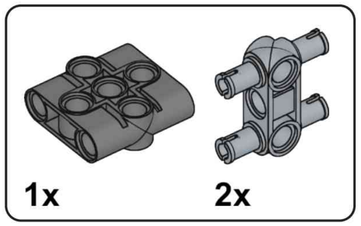

J21

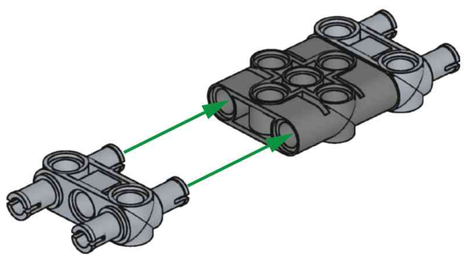

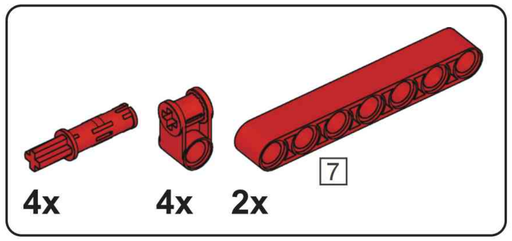

J22

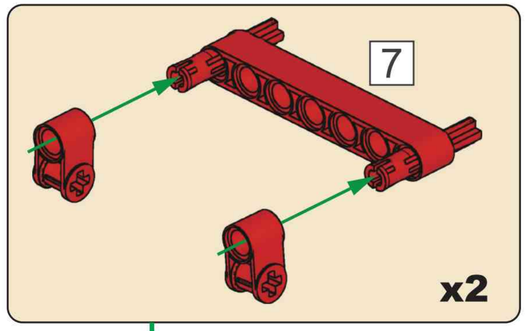

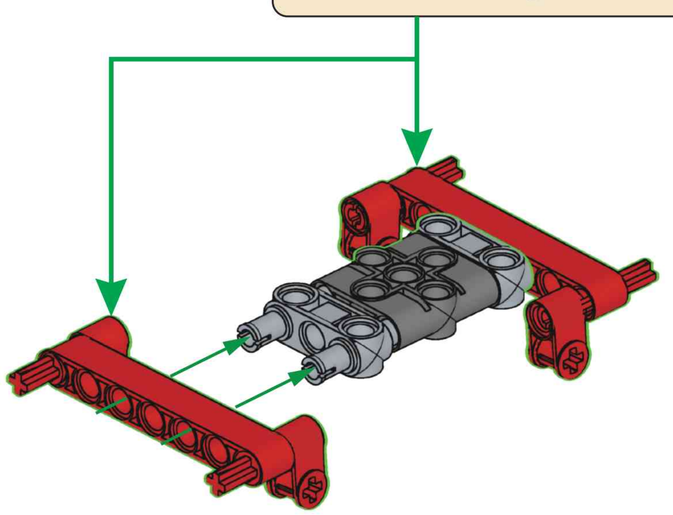

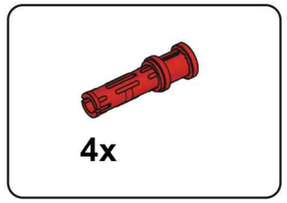

J23

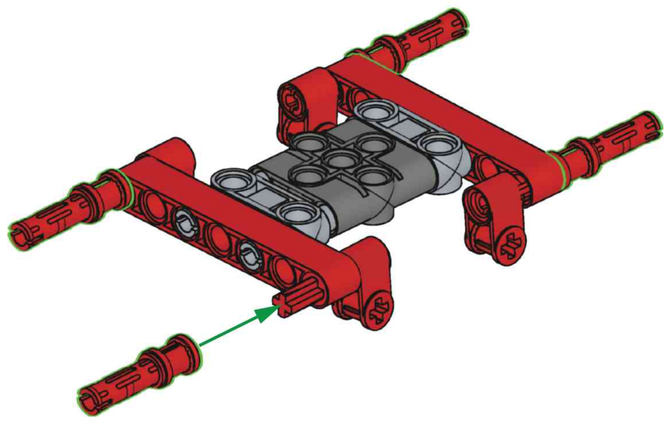

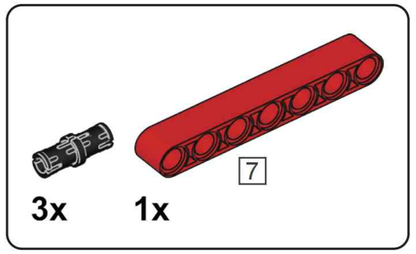

J24

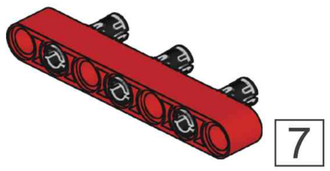

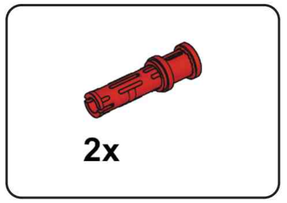

J25

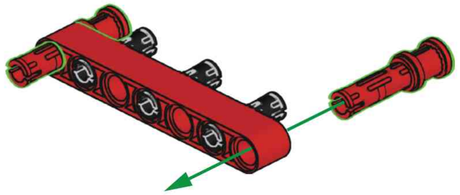

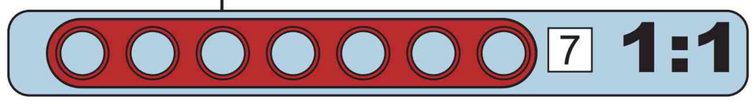

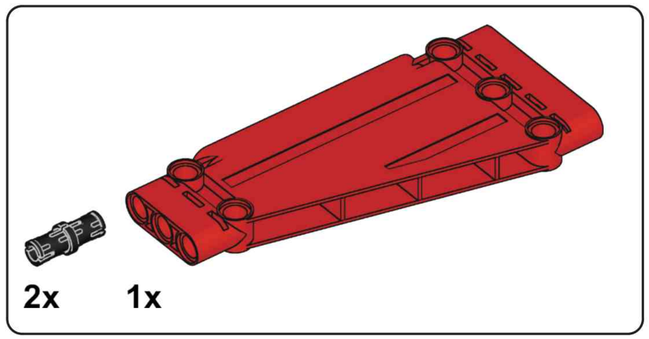

J26

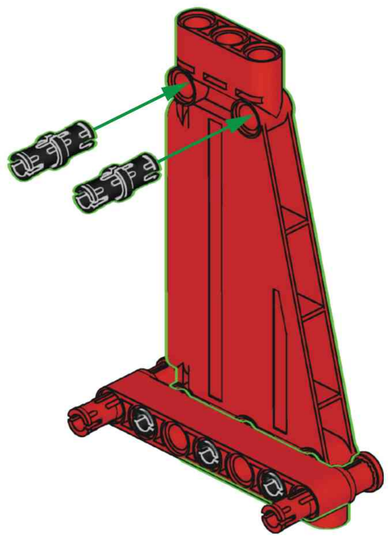

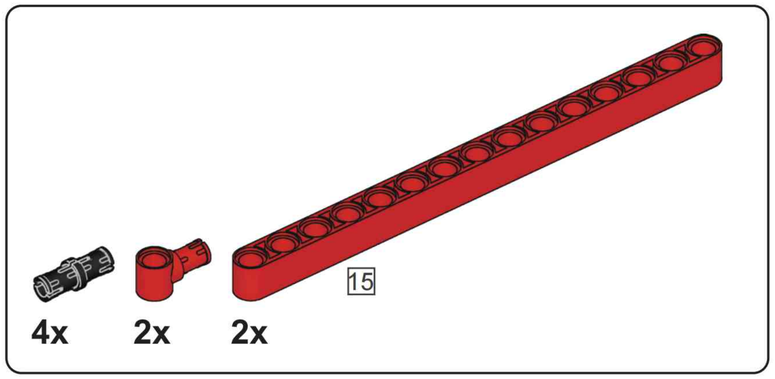

J27

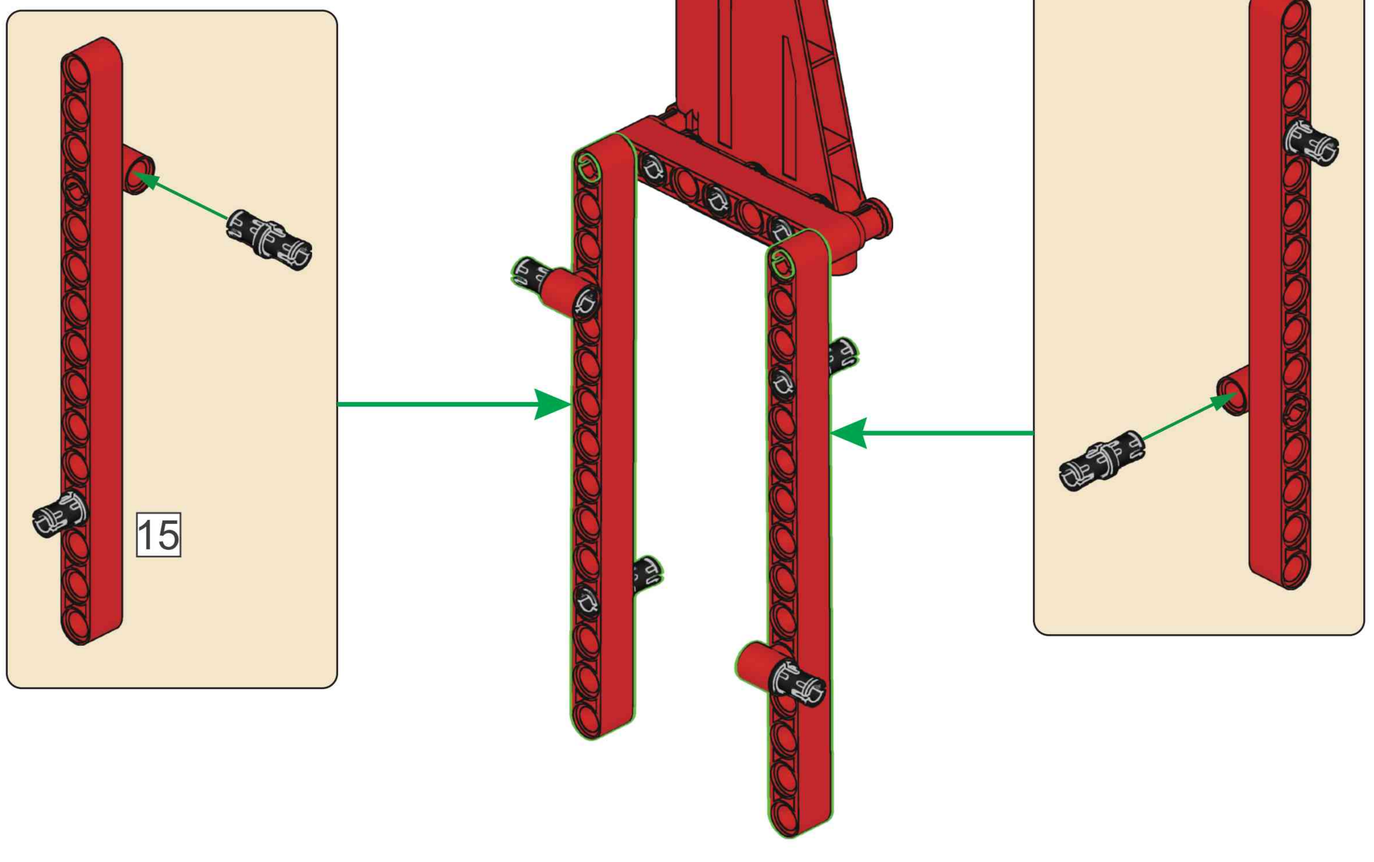

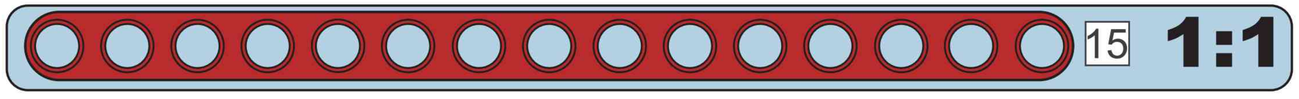

J28

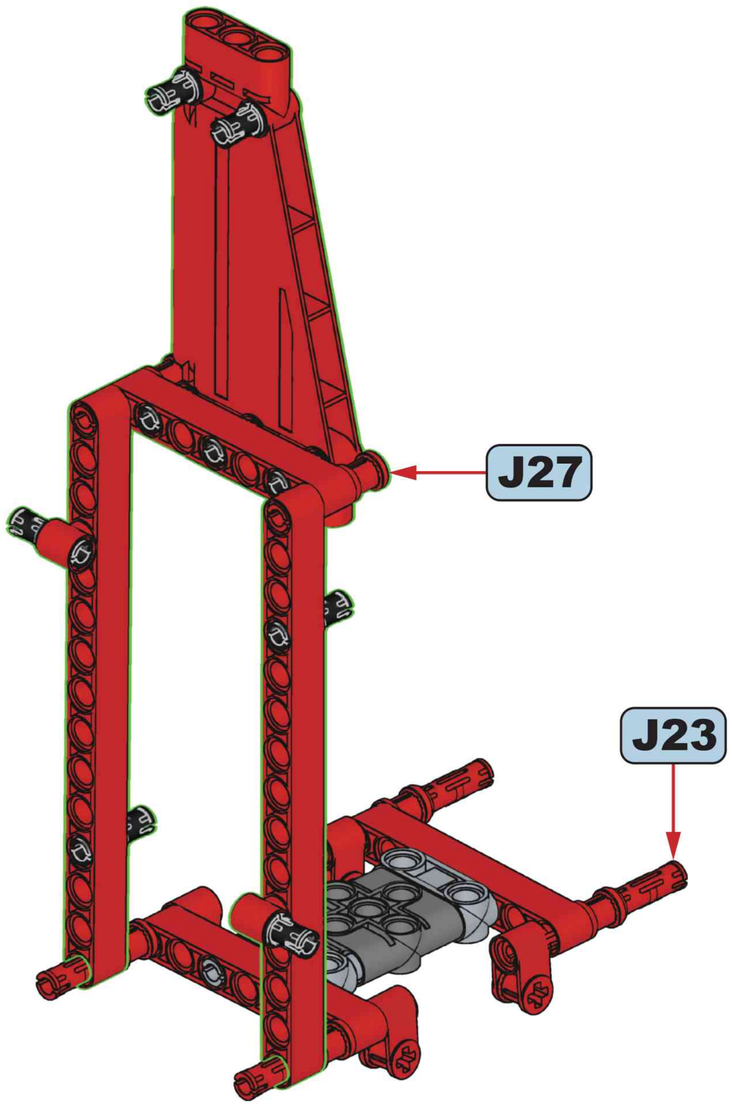

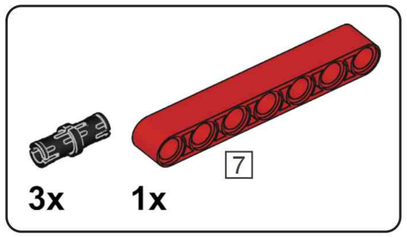

J29

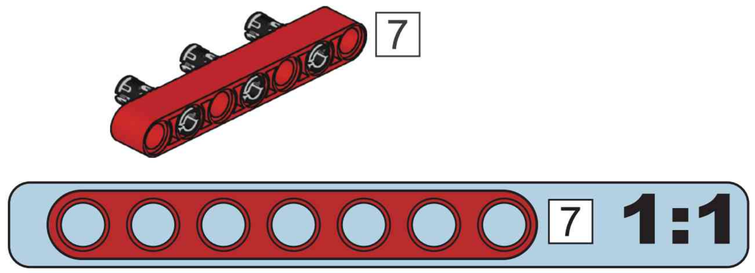

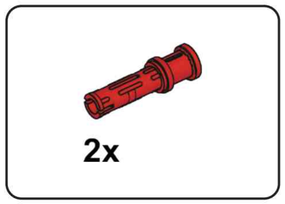

J30



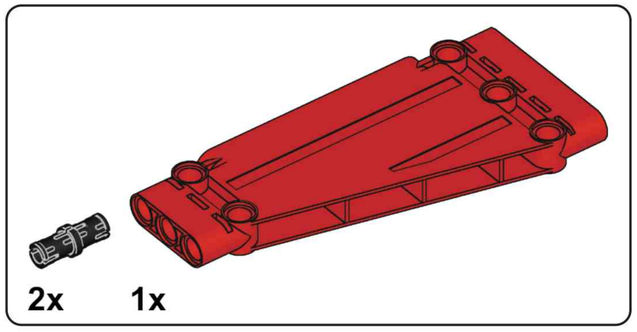

J31

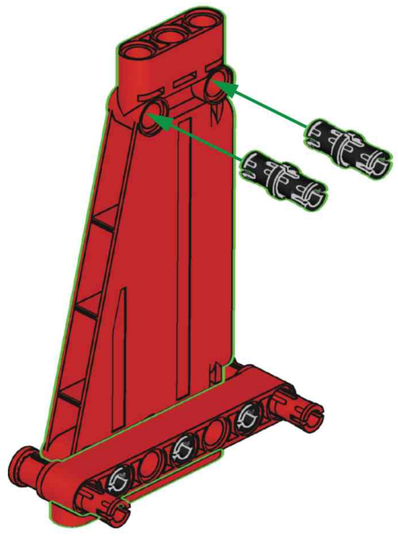

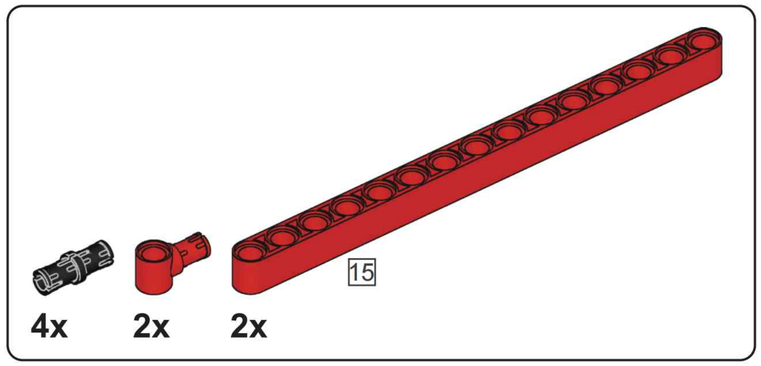

J32

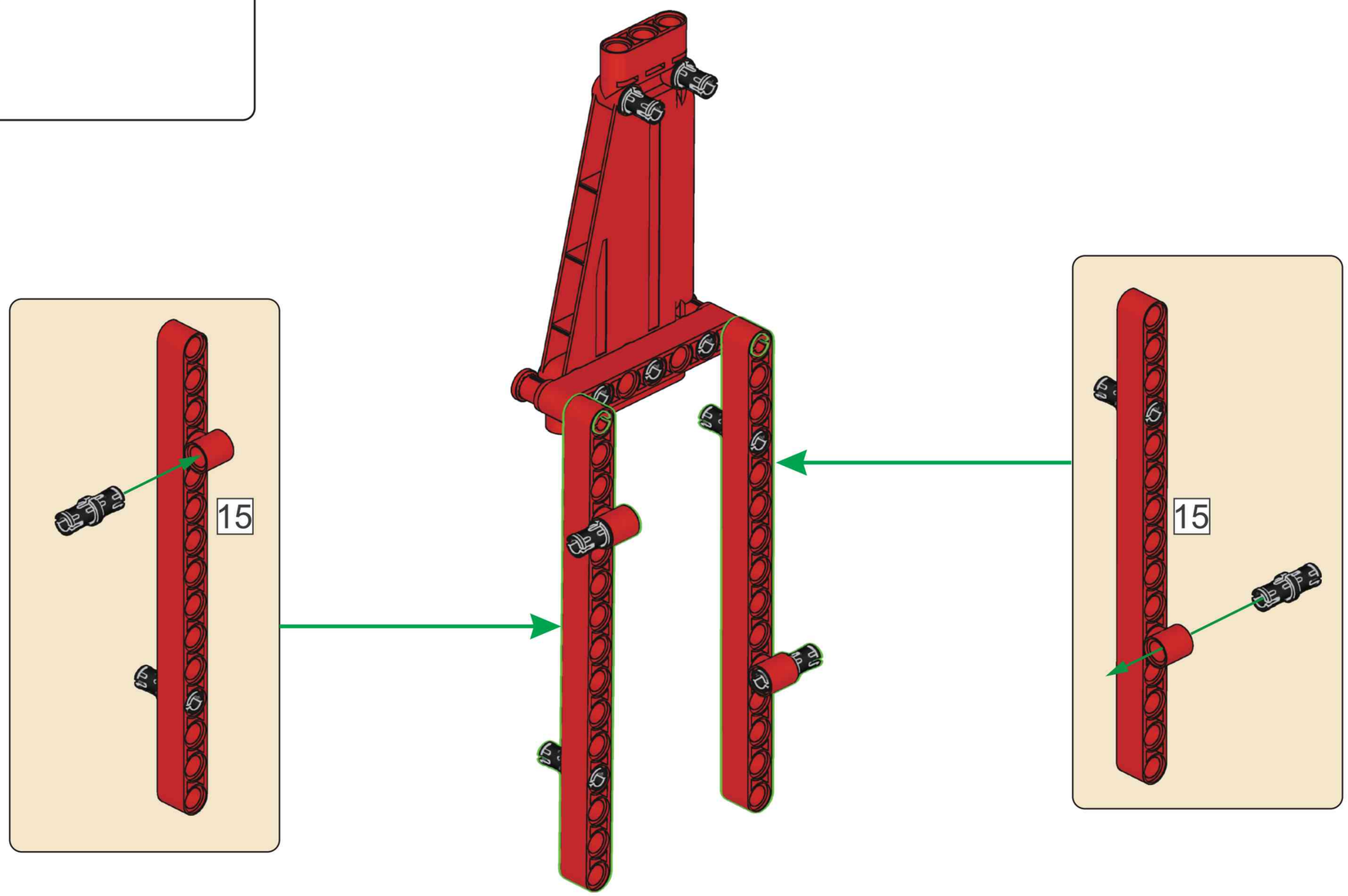

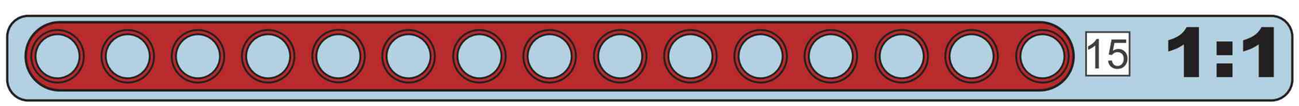

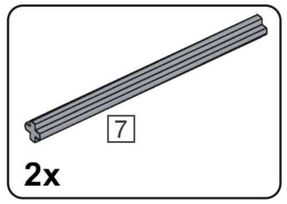

J33

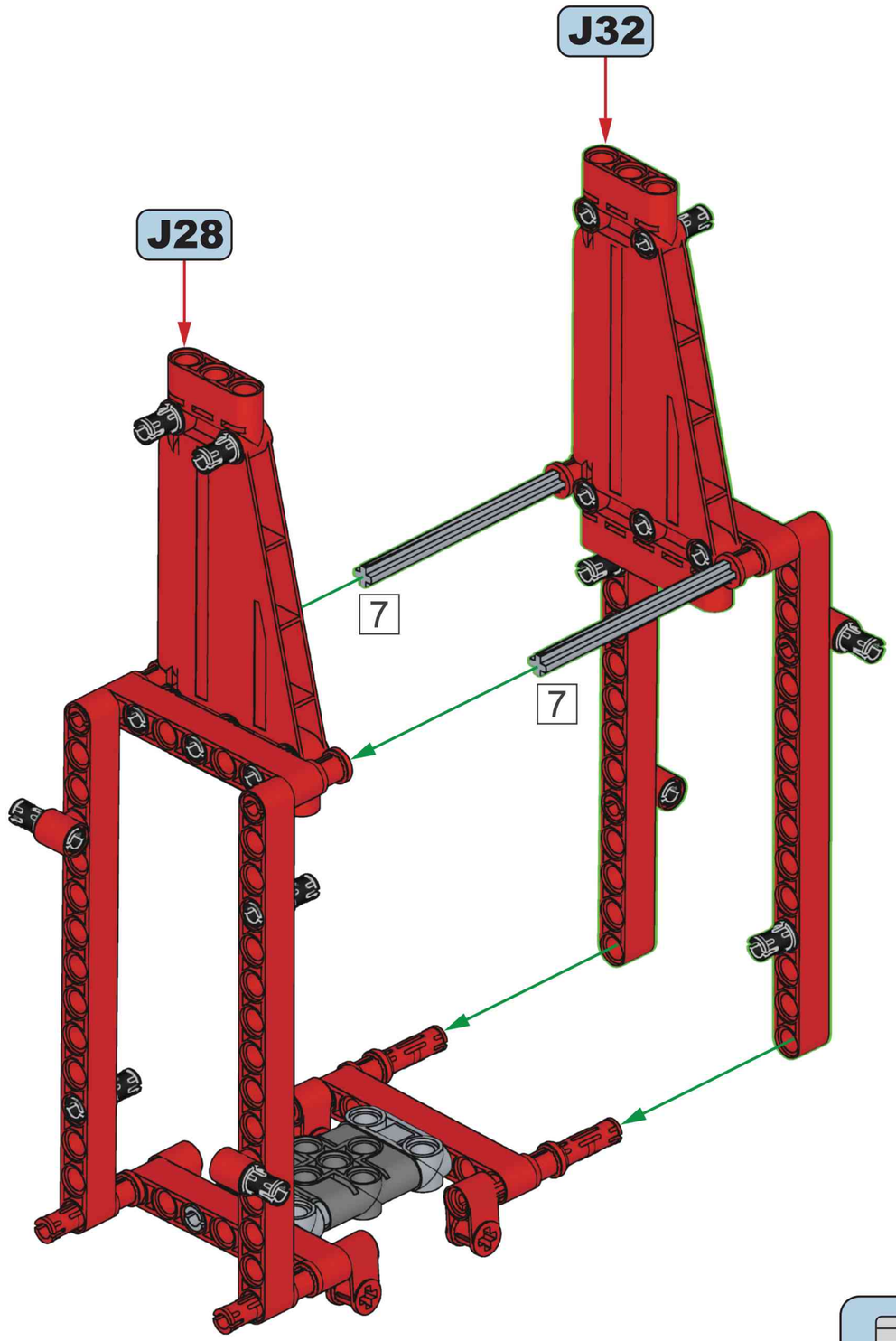



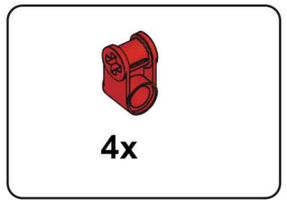

J34

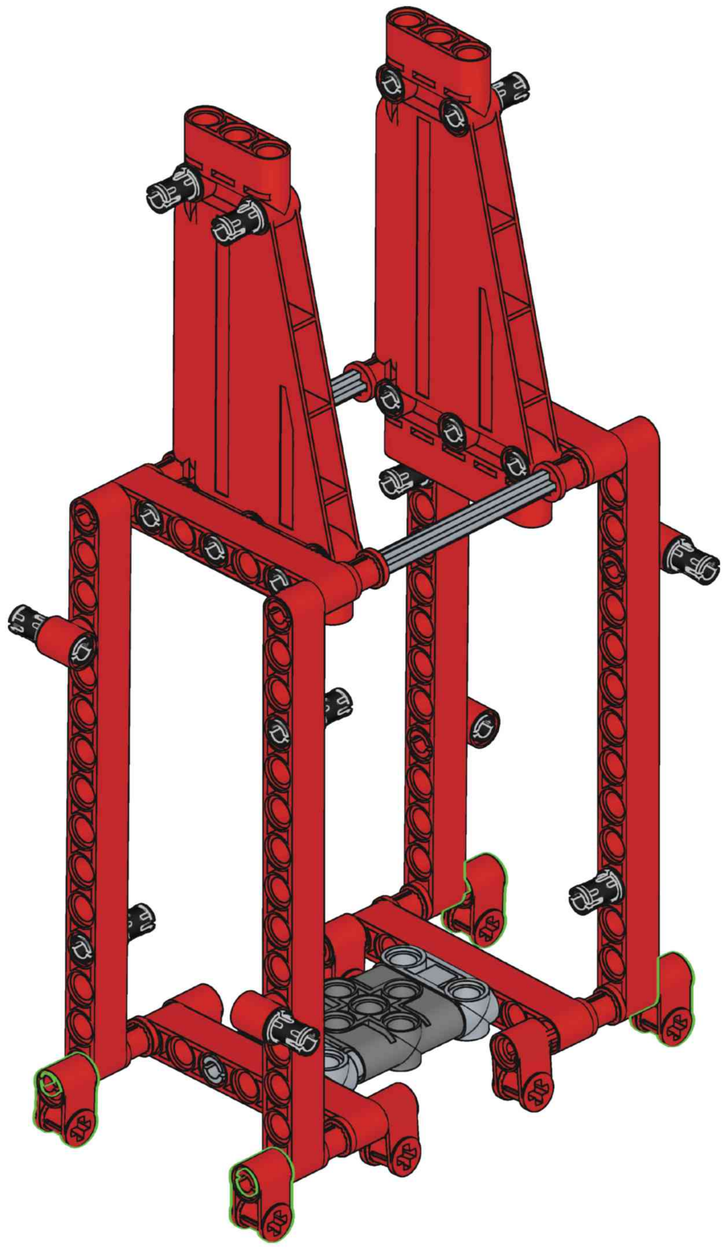

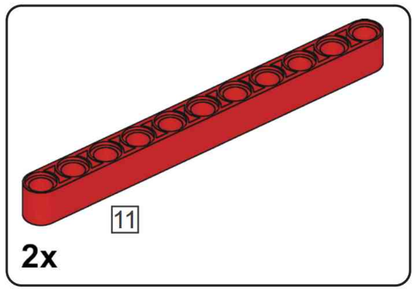

J35

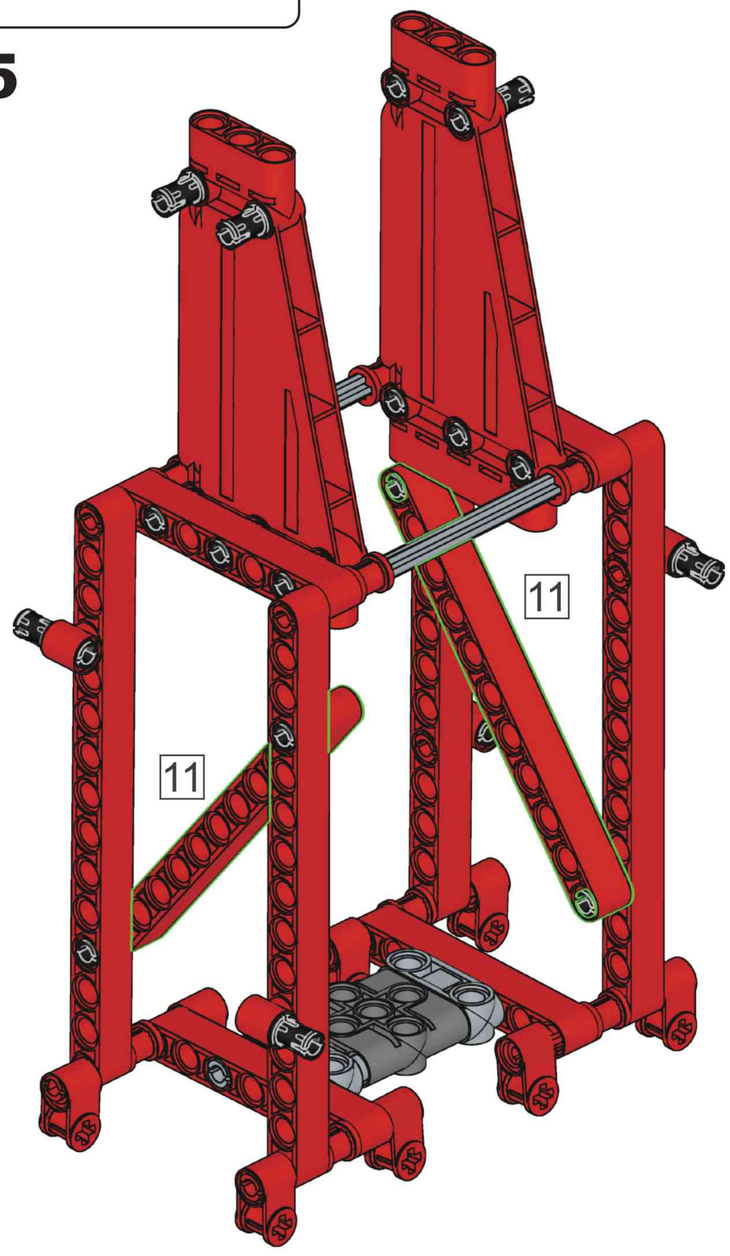

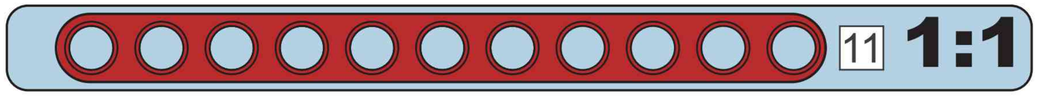

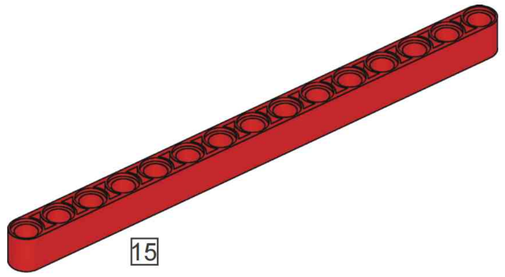

2x

J36

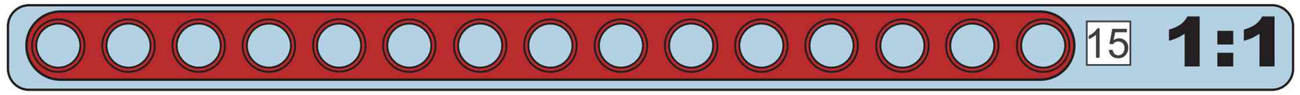

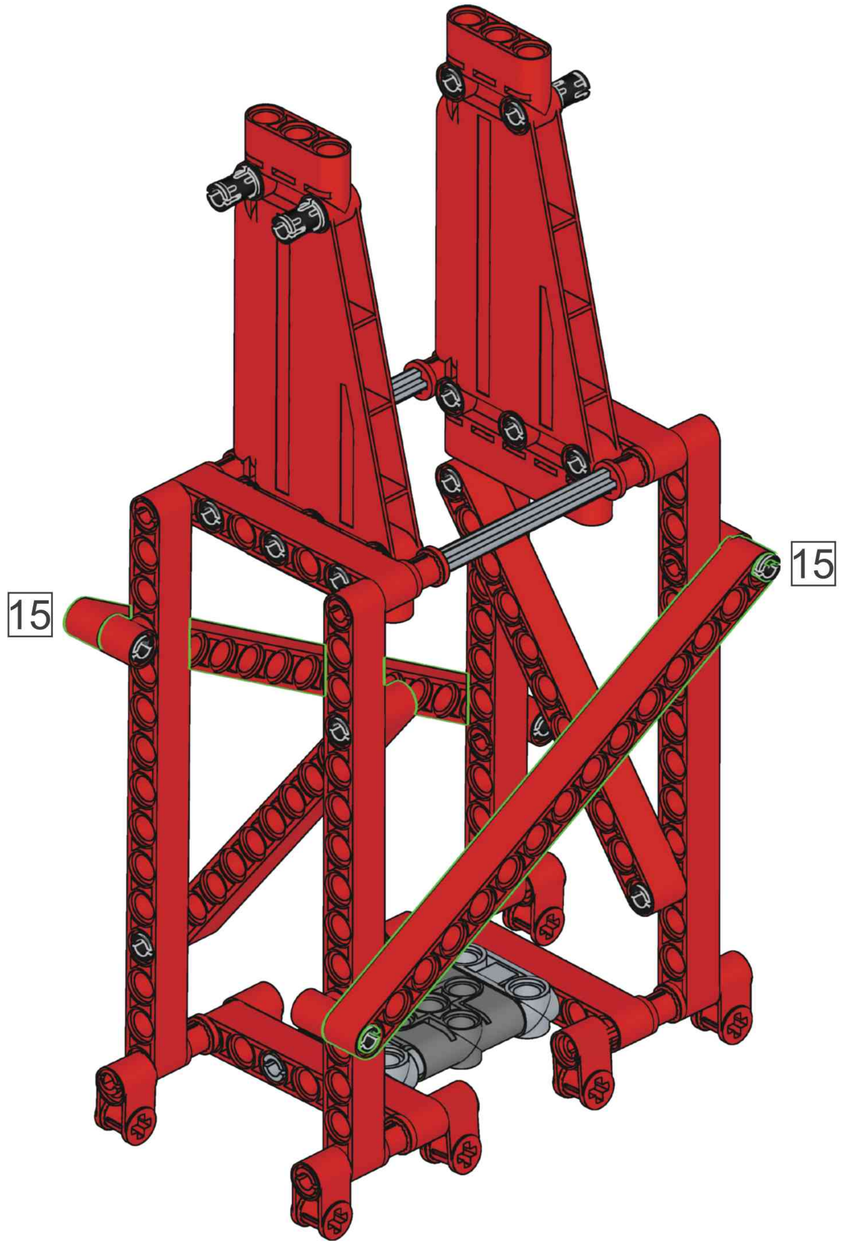

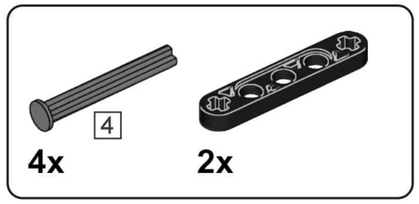

J37

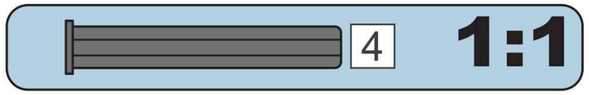

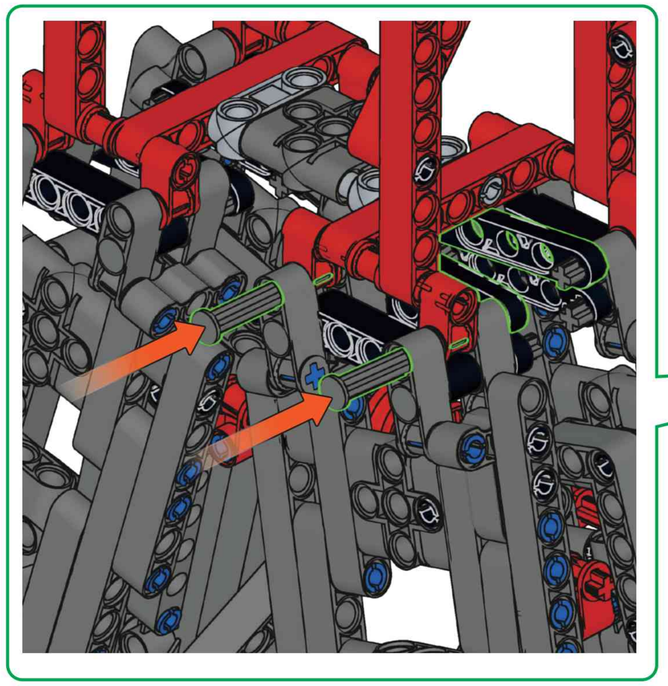

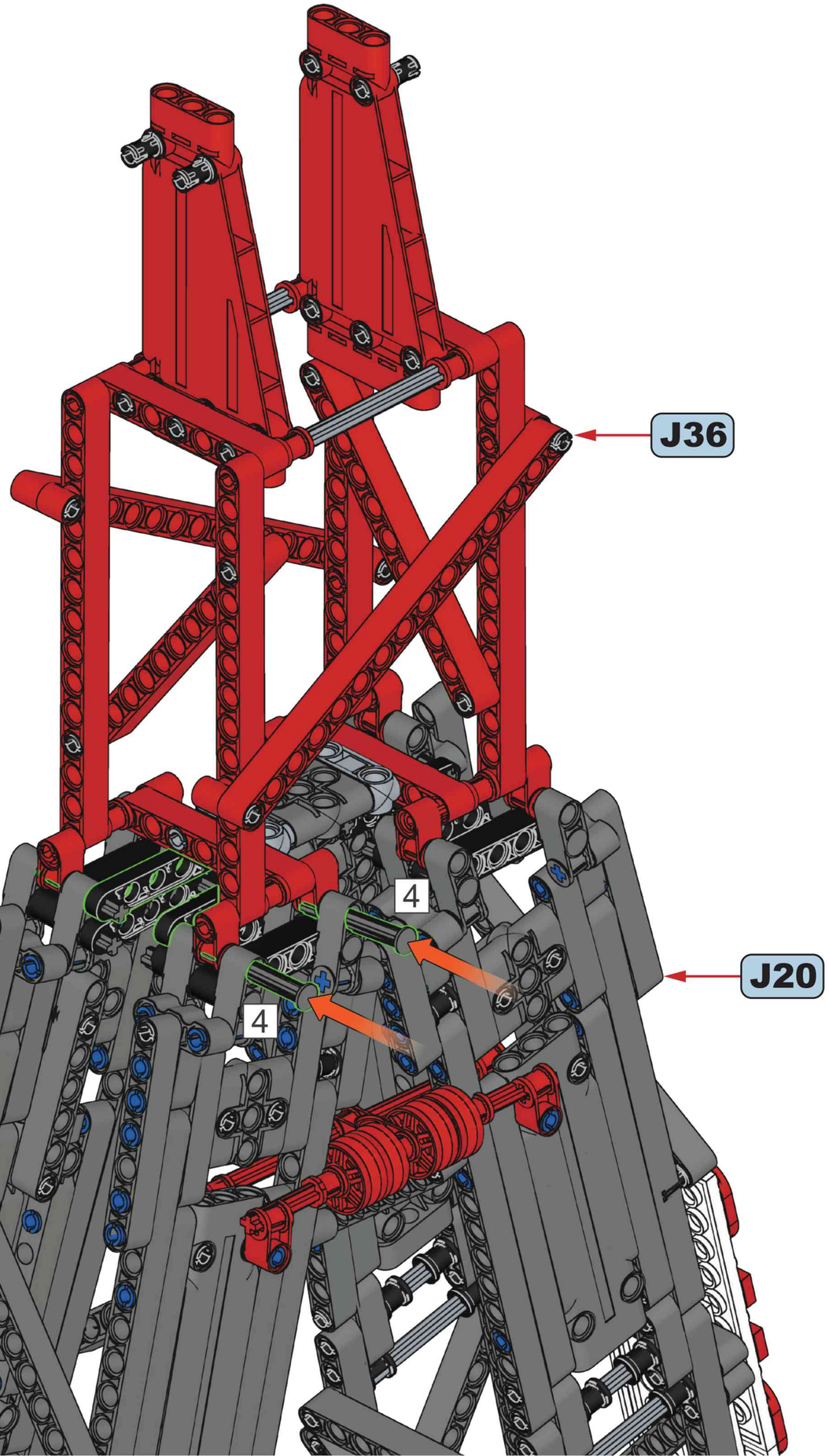

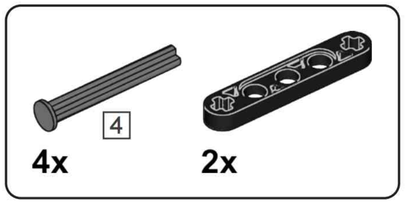

J38

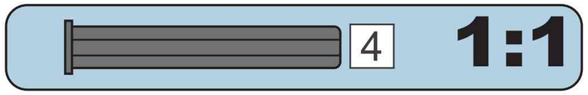



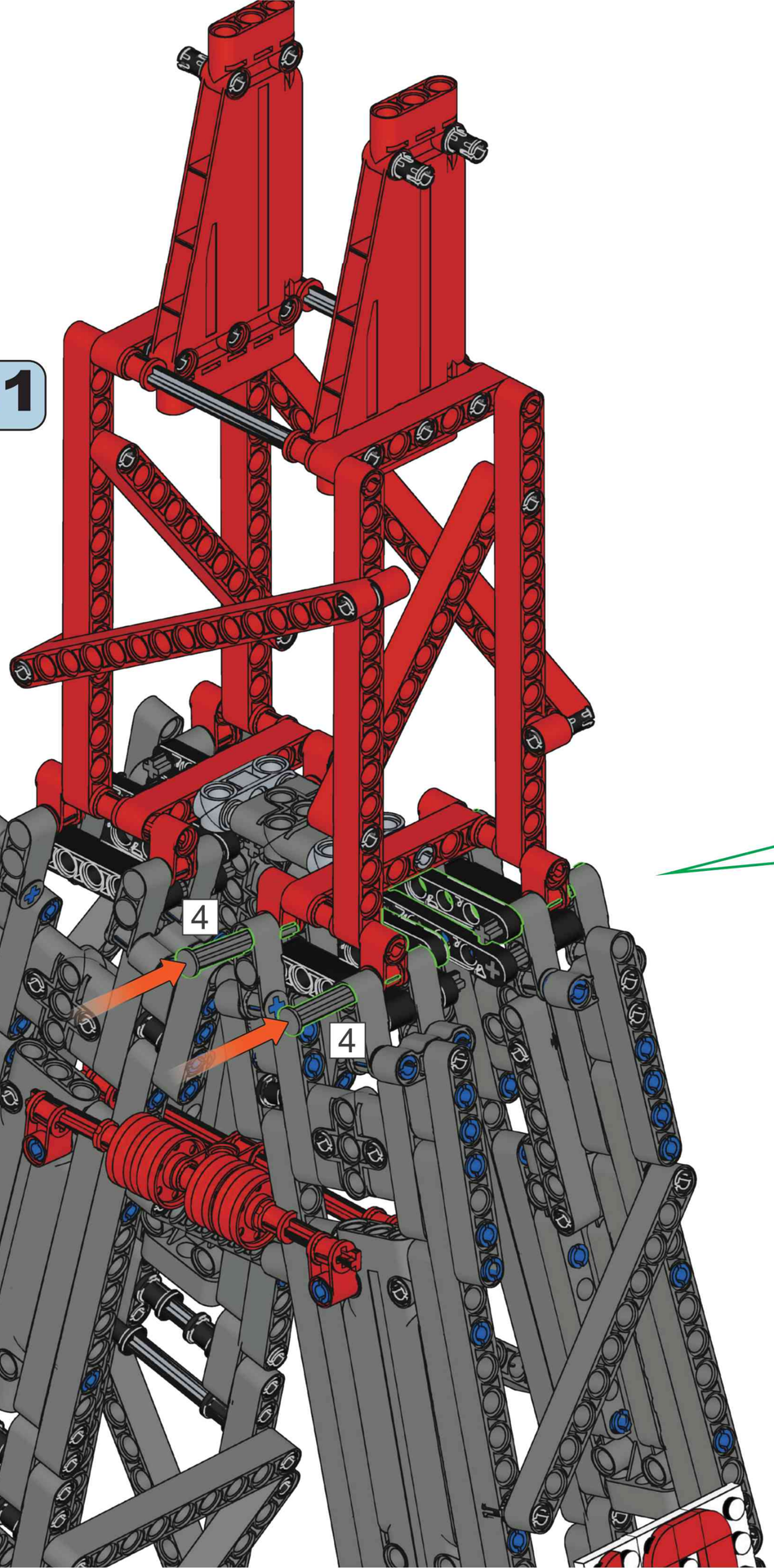

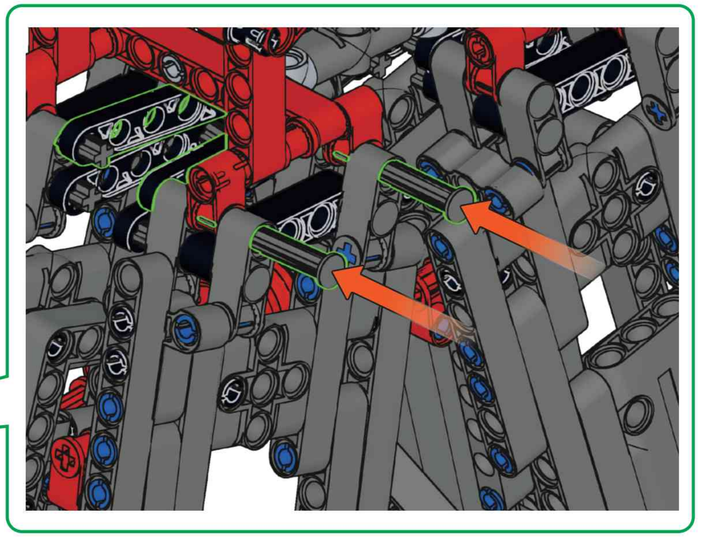

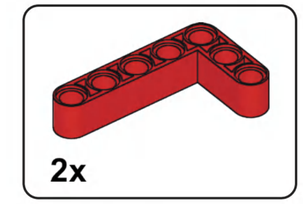

J39



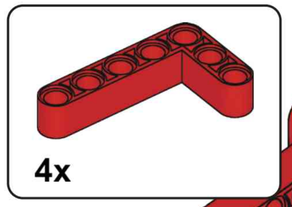

J40

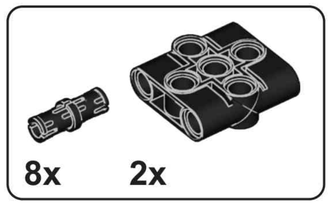

J41

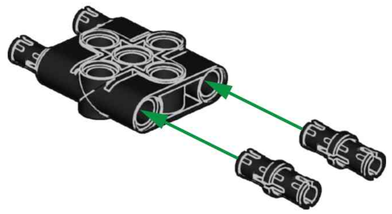

x2

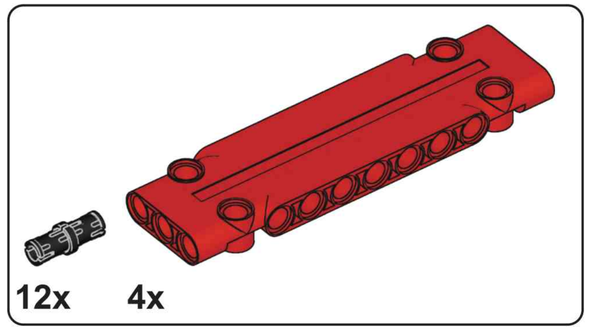

J42

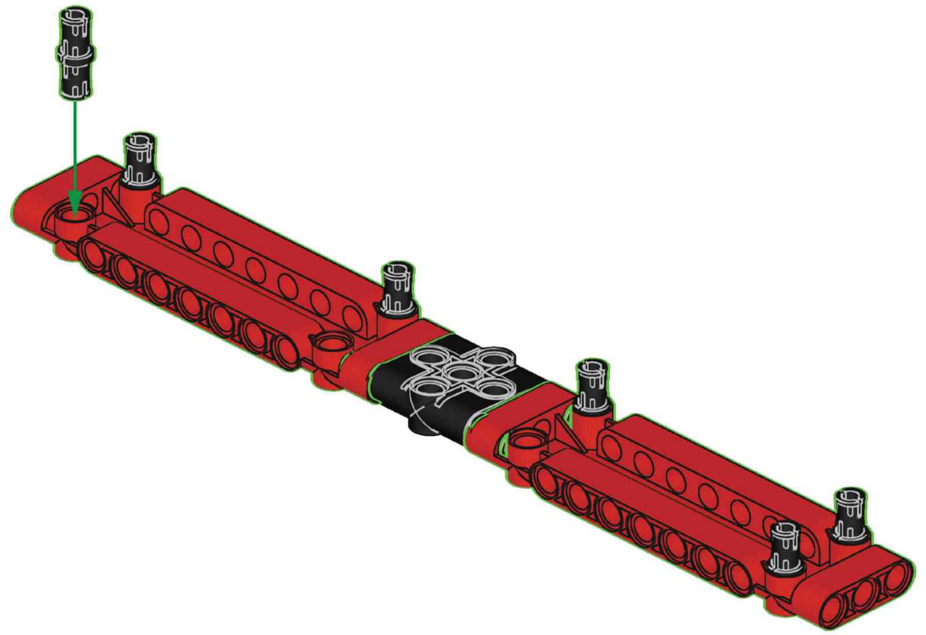

x2

J43

J42

J40

J42

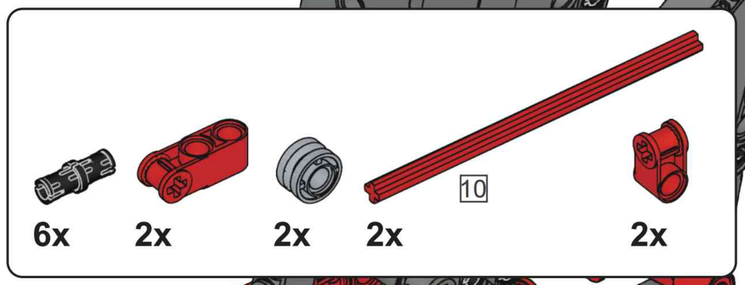



J44

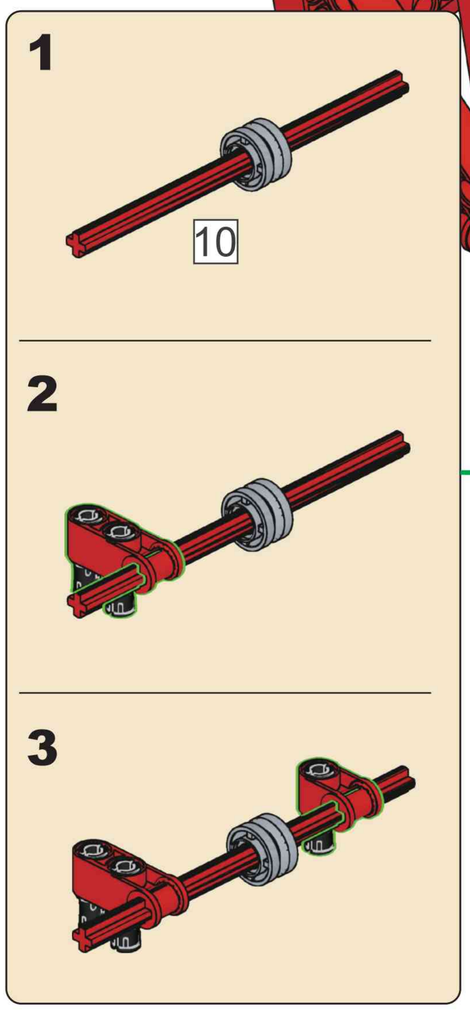

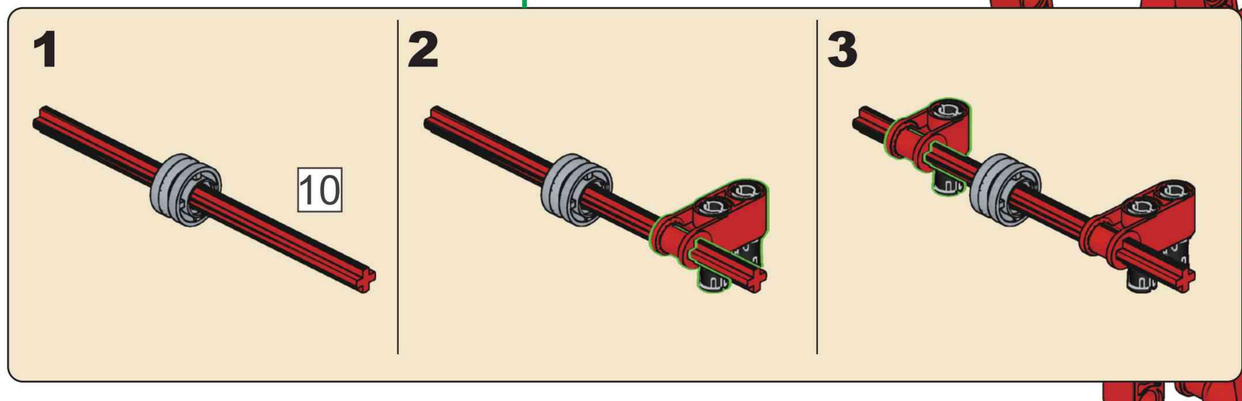

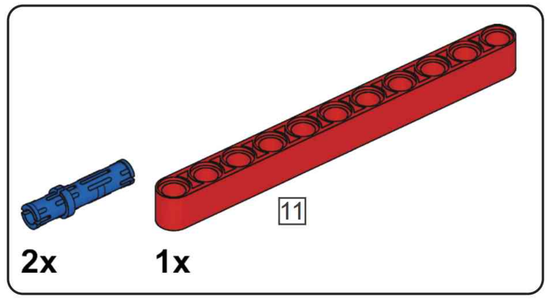

J45

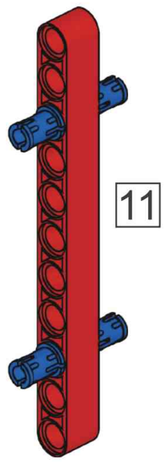

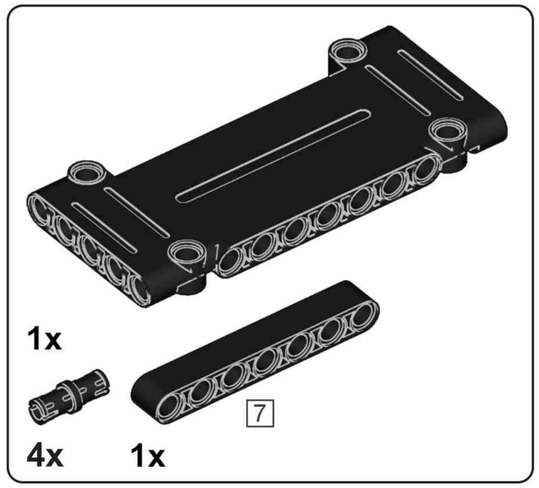

J46

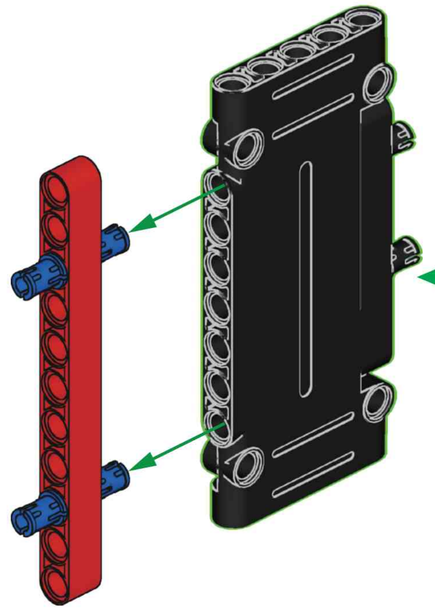

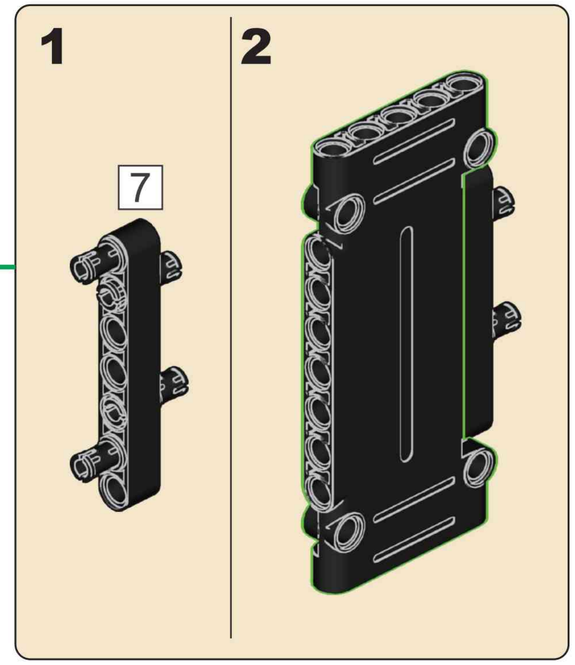

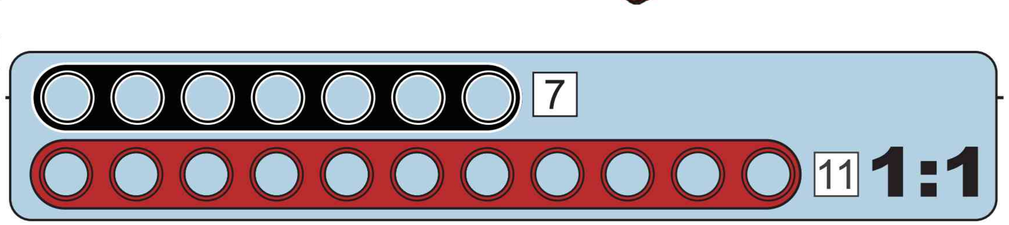

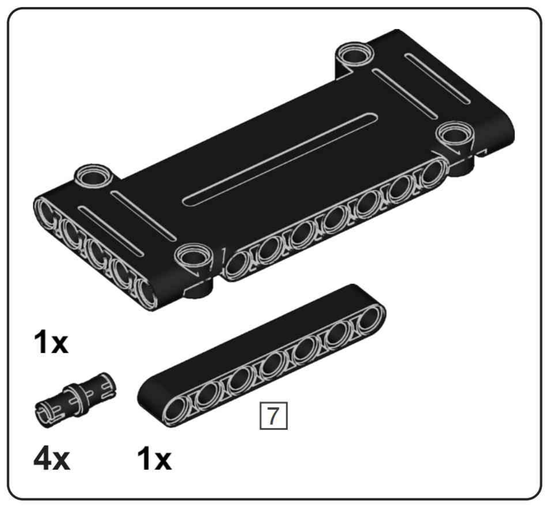

J47

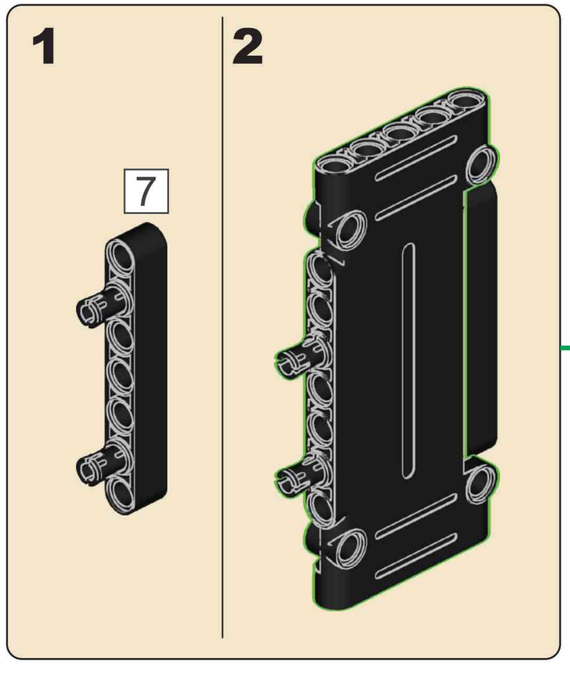

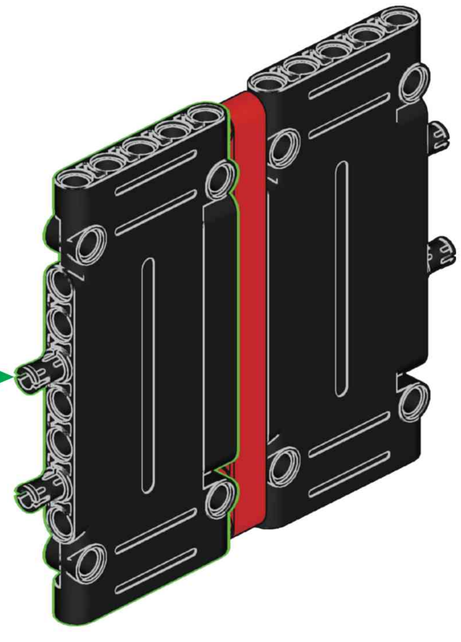

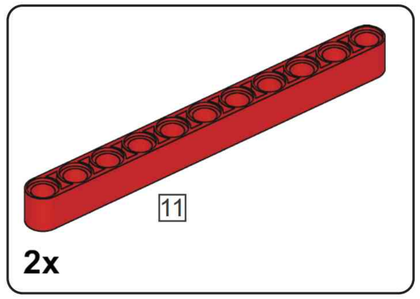

J48

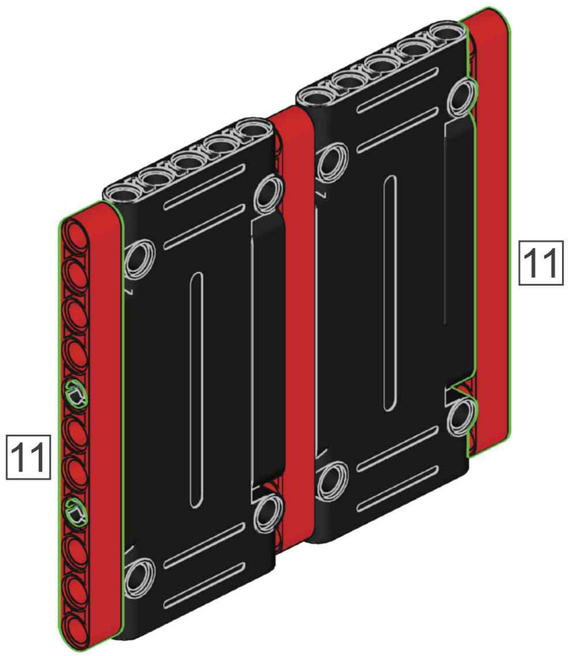

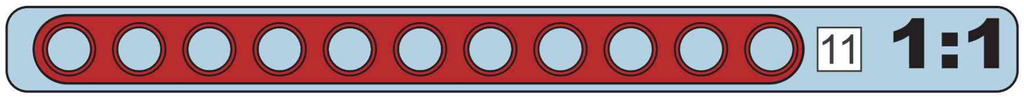

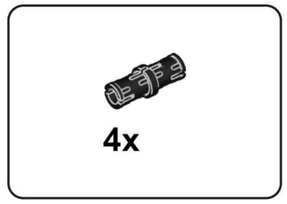

J49



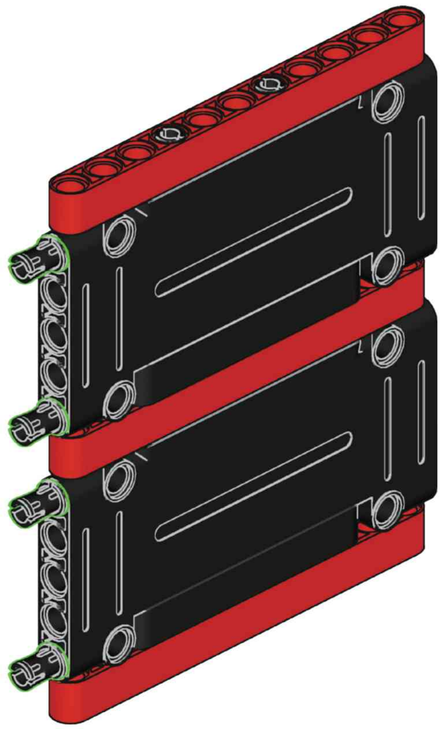

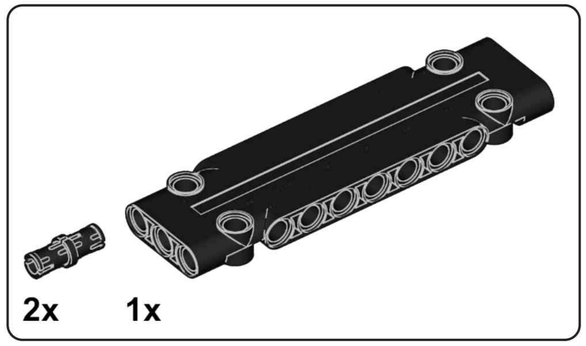

J50

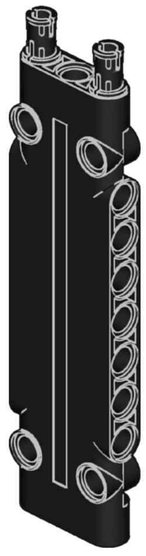

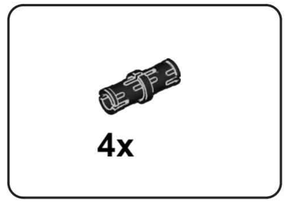

J51

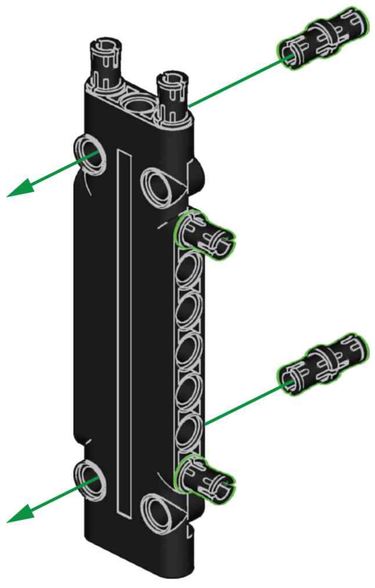

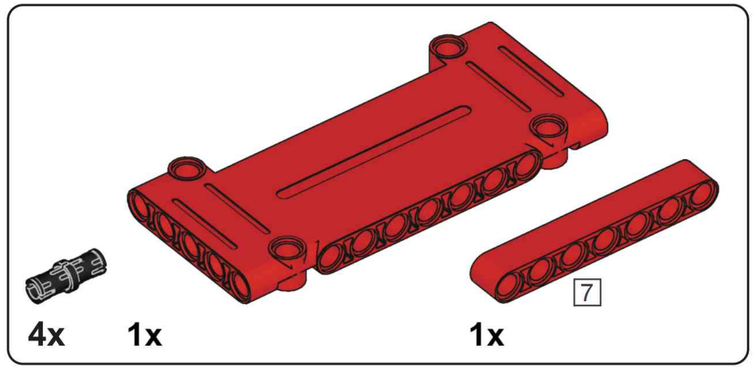

J52

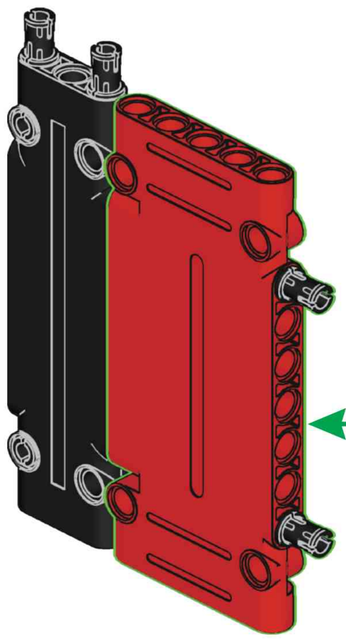

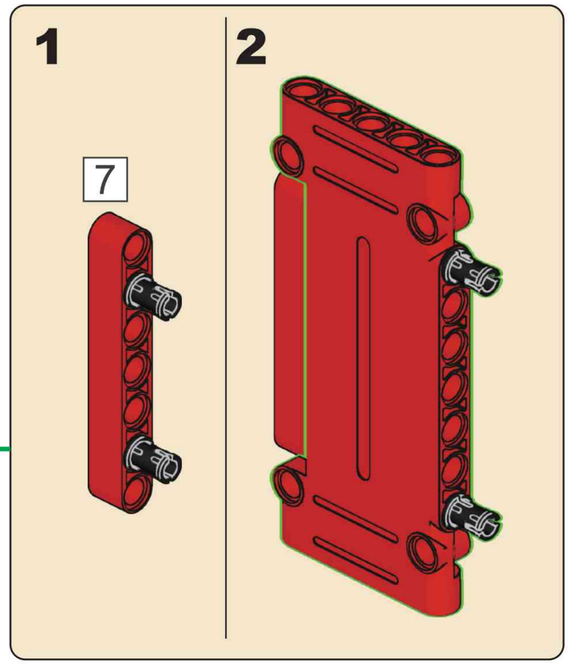

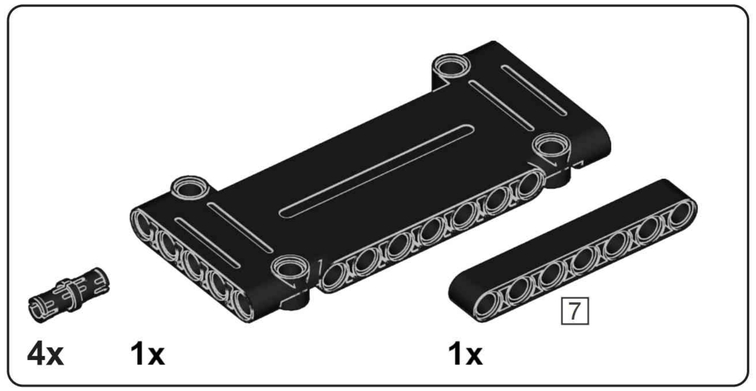

J53

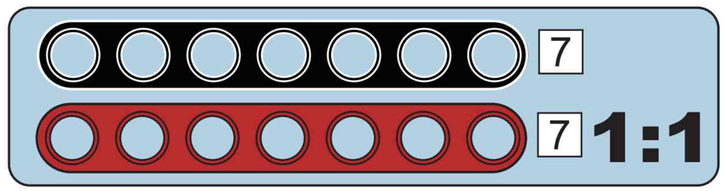

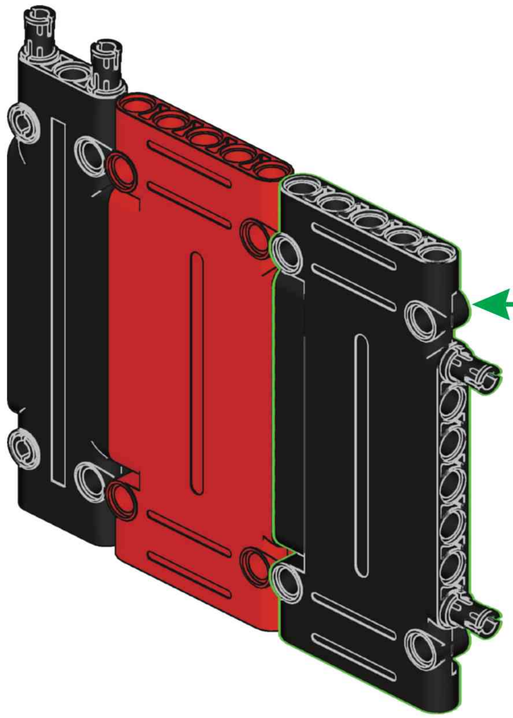

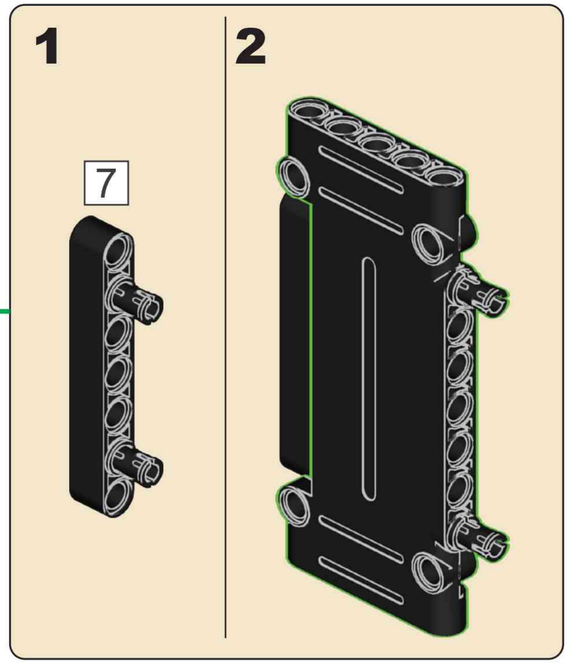

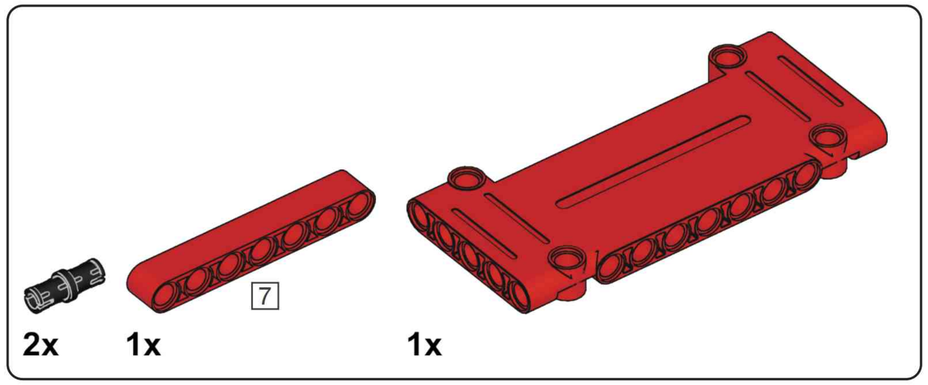

J54

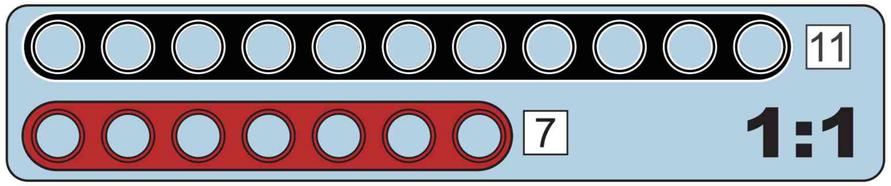

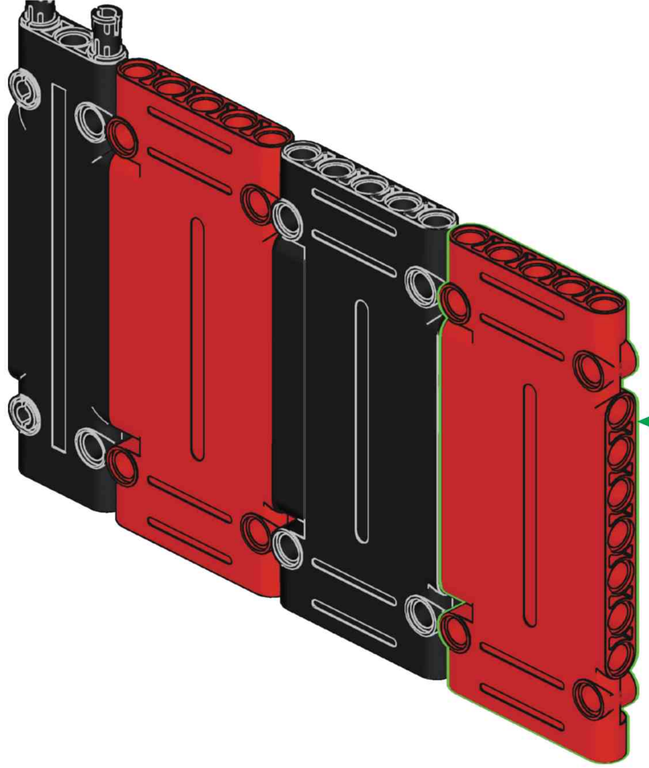

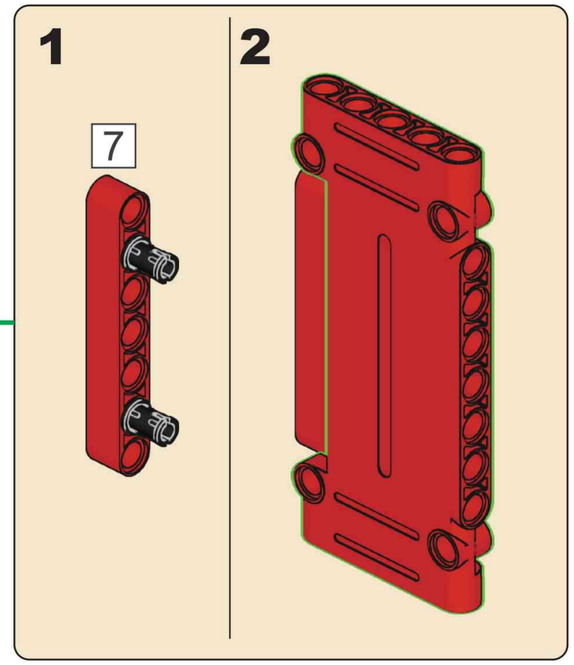

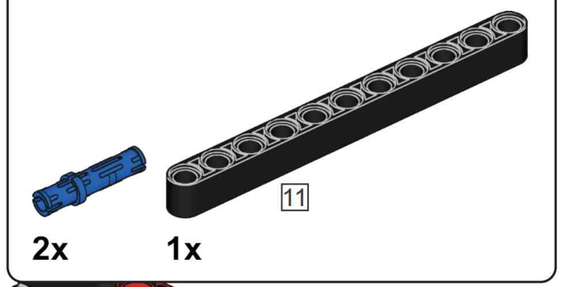

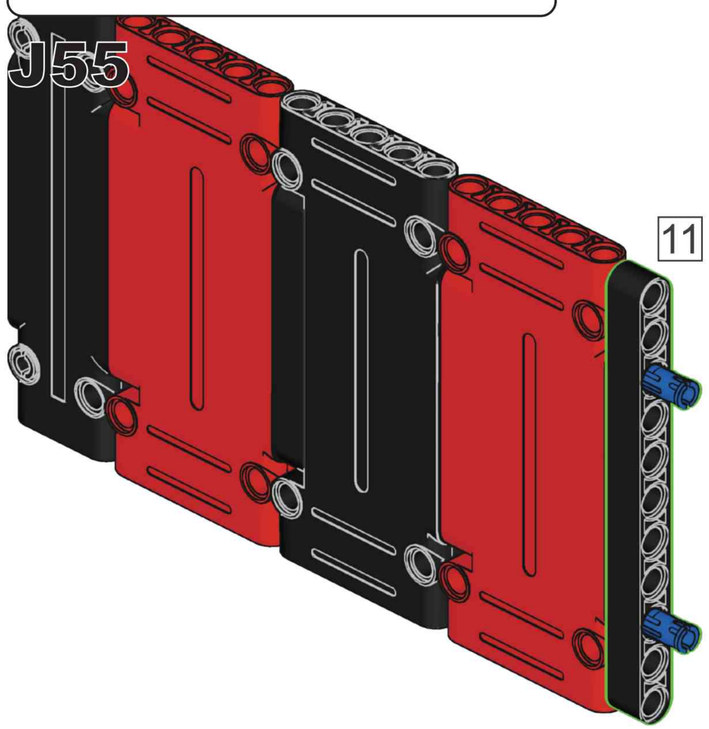

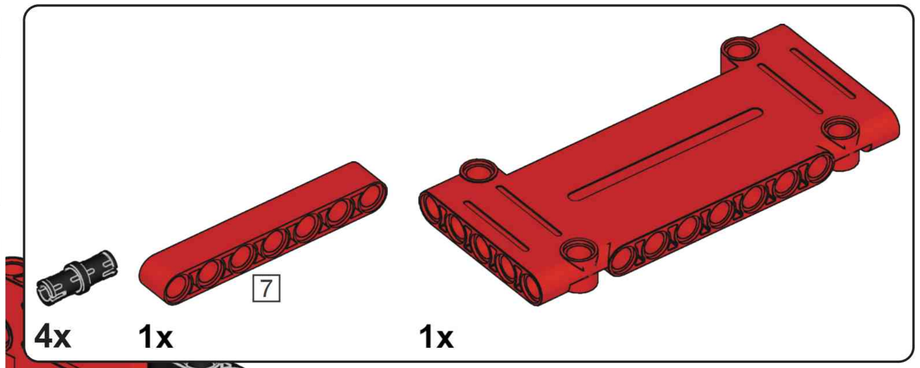

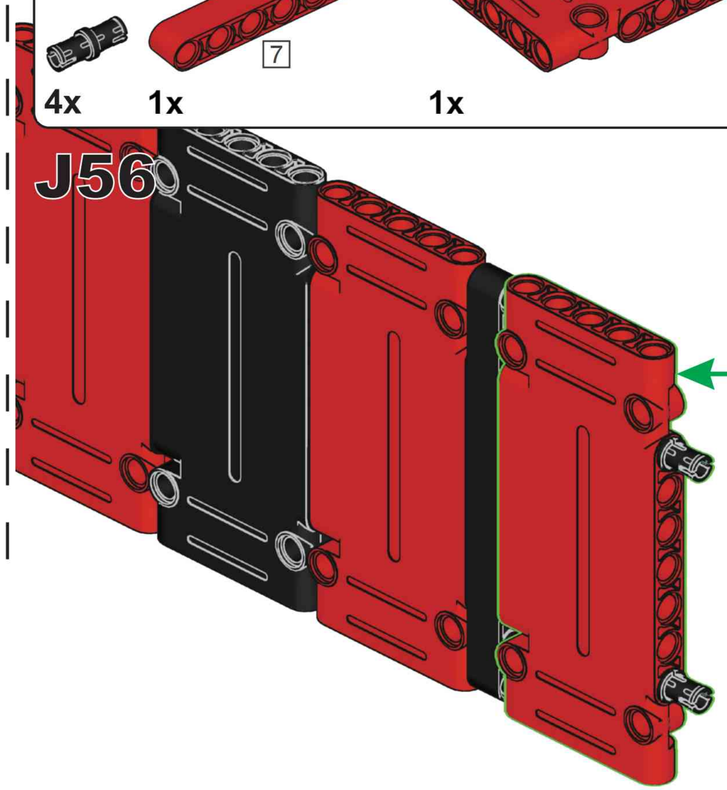

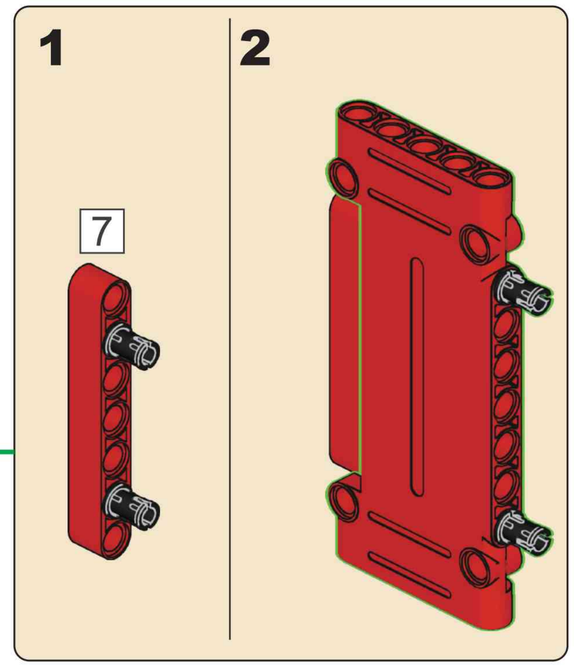

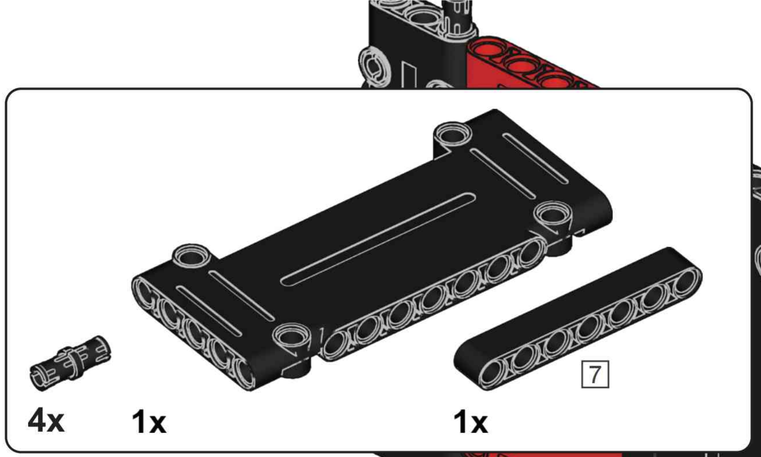

J57

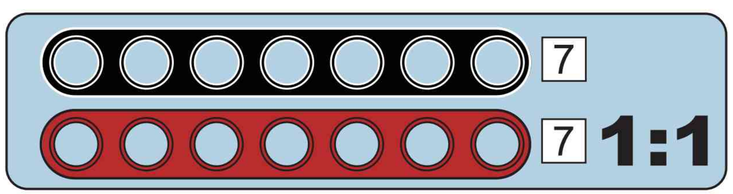

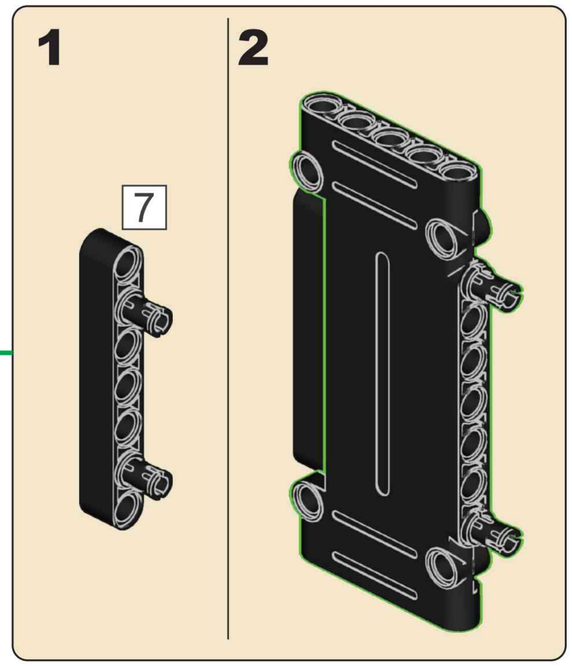

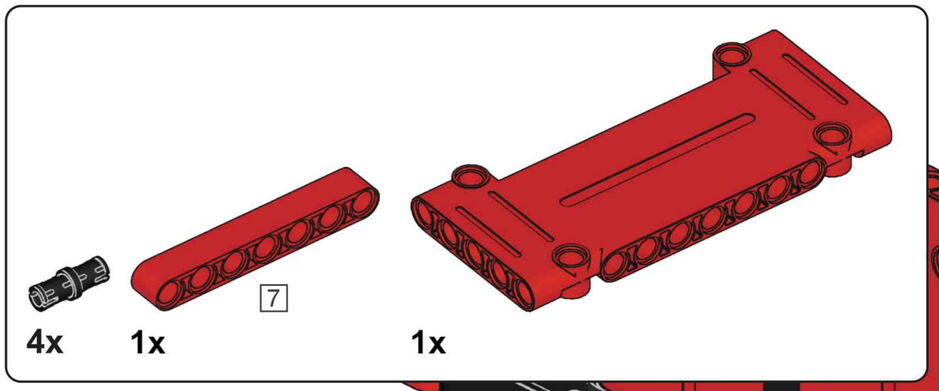

J58

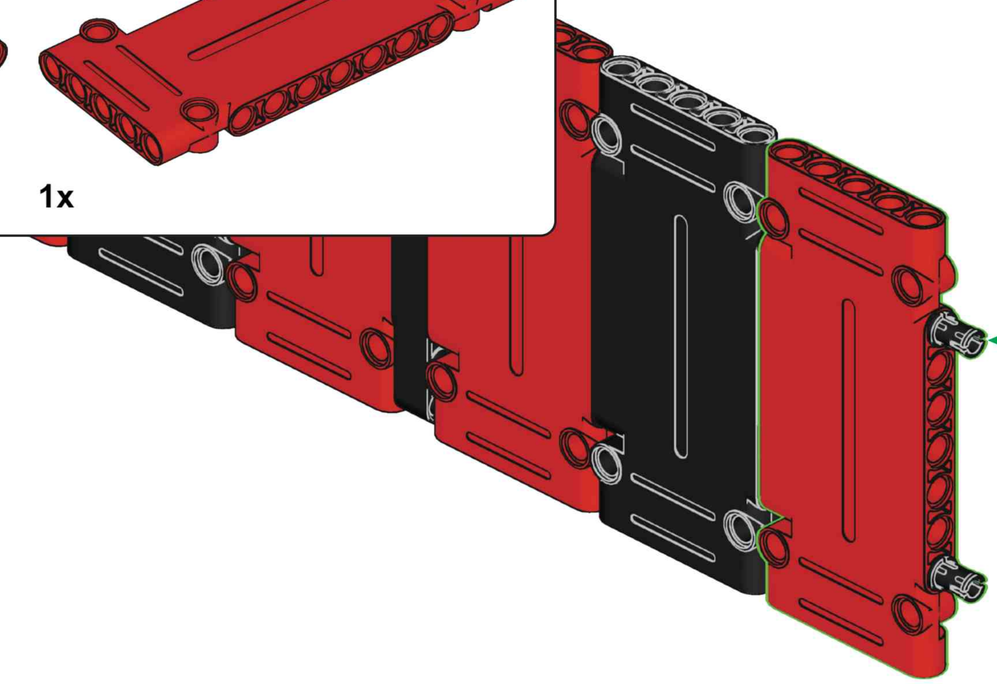

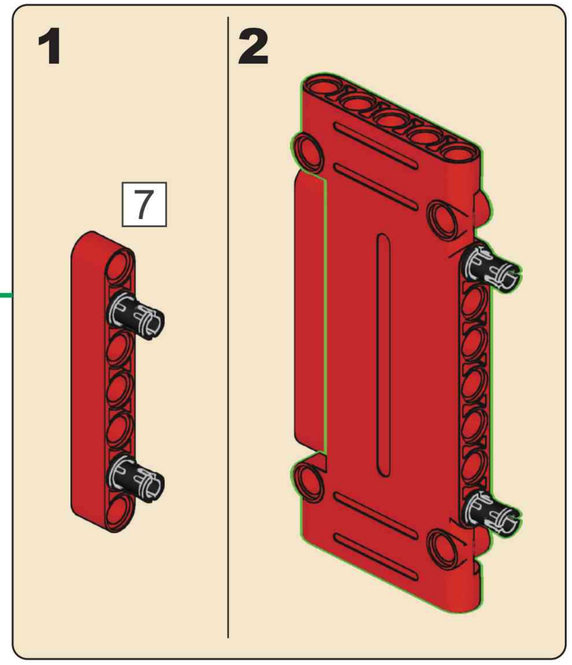

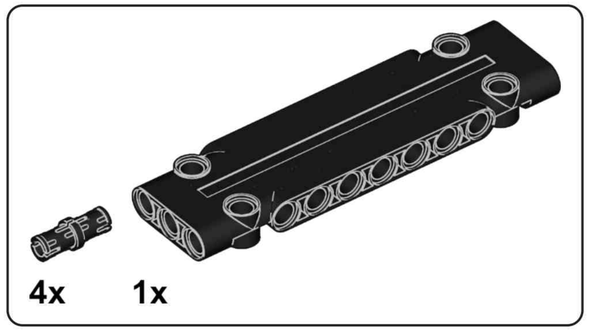

J59

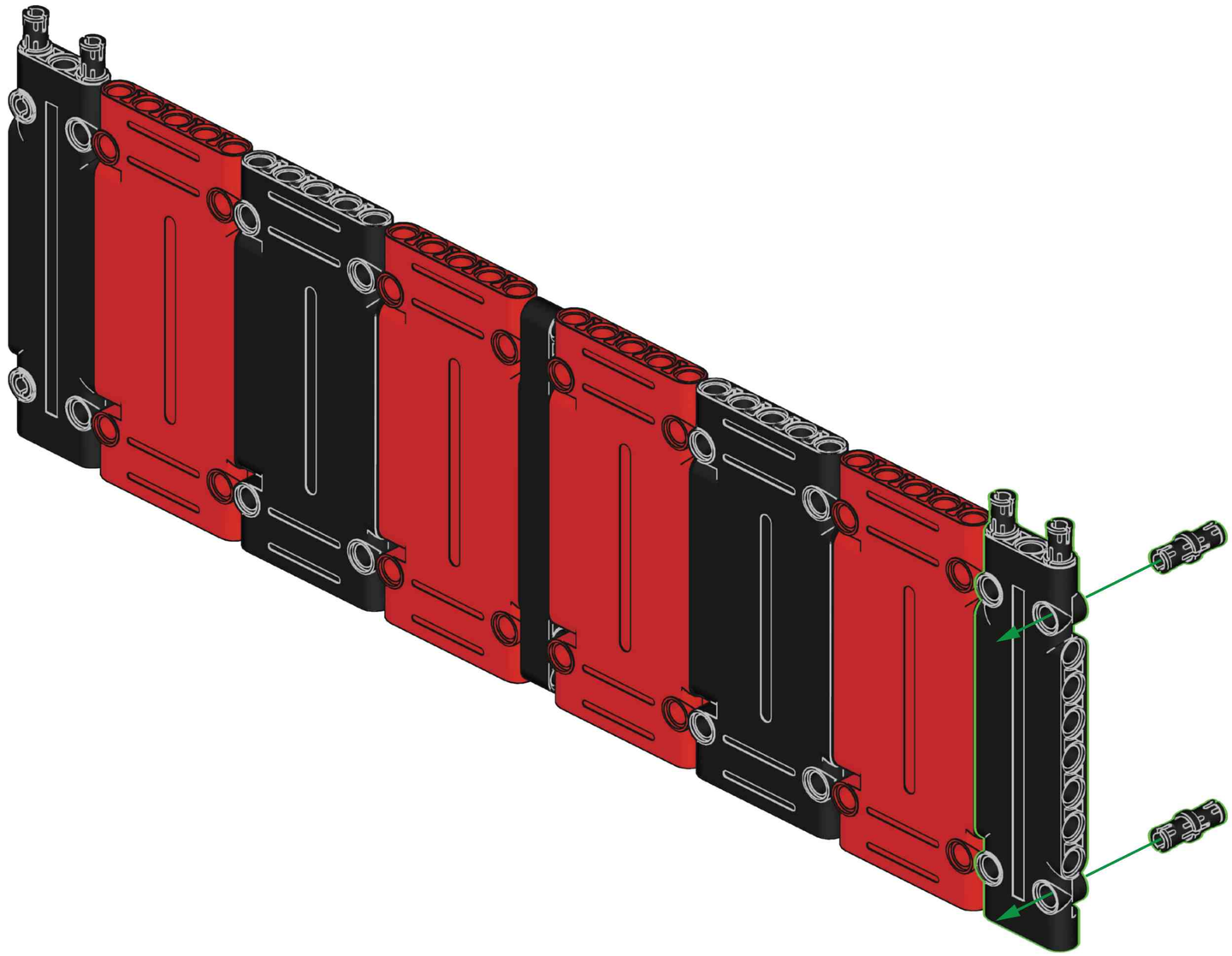

J60

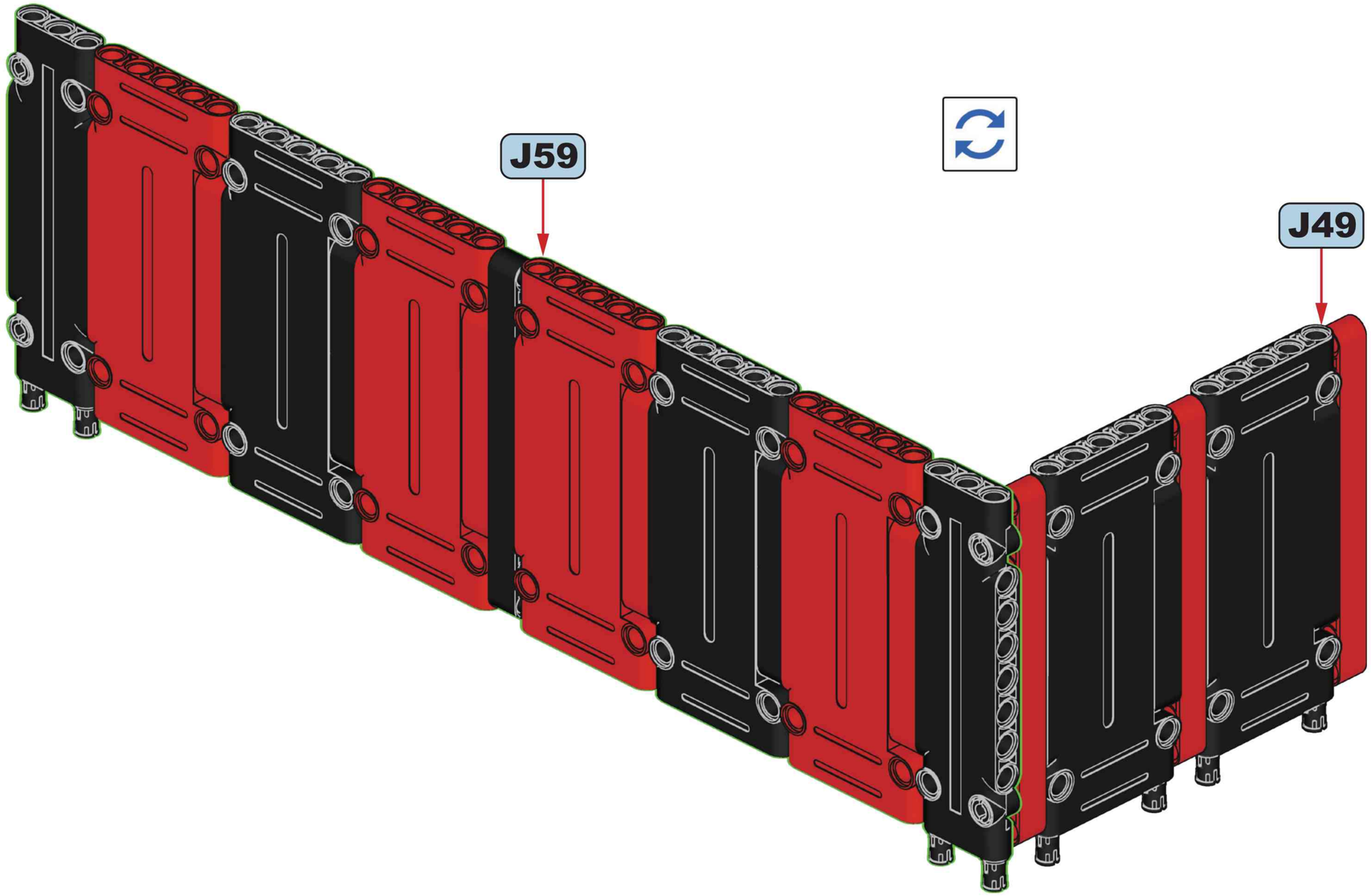

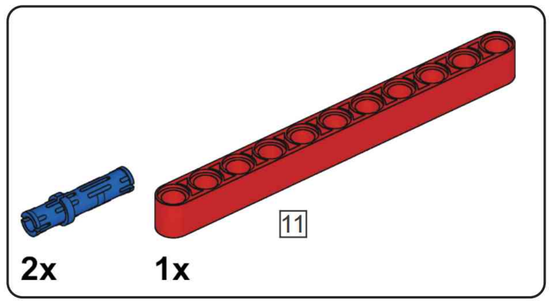

J61

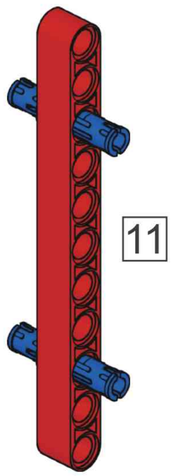

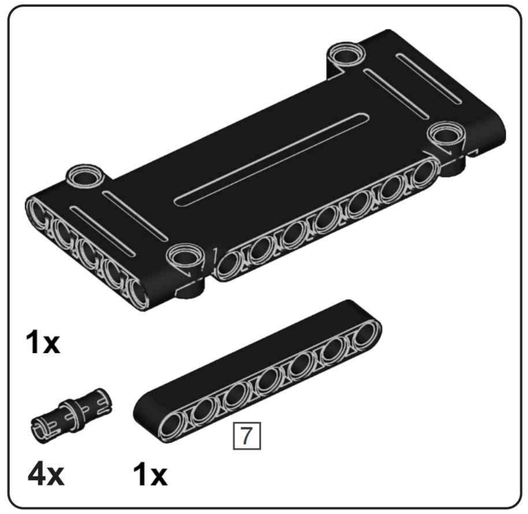

J62

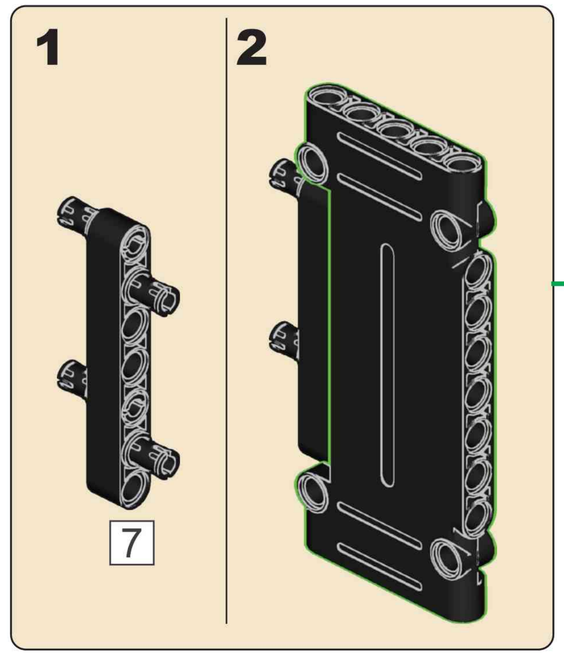

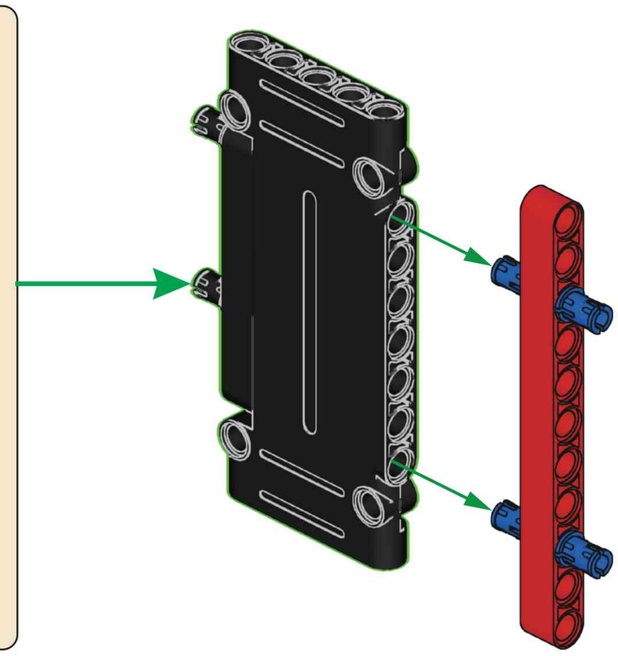

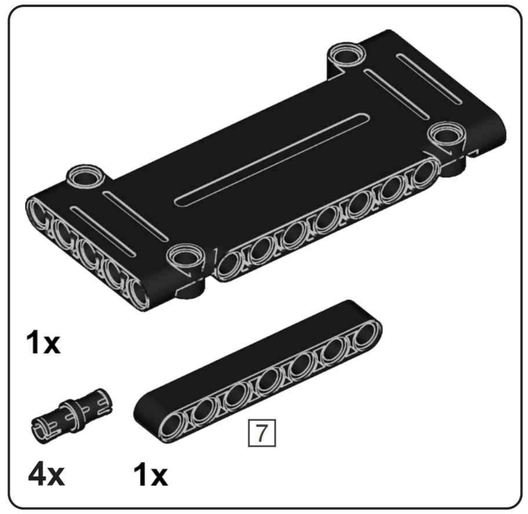

J63

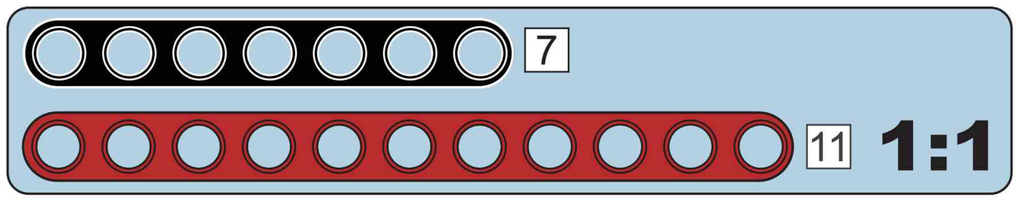

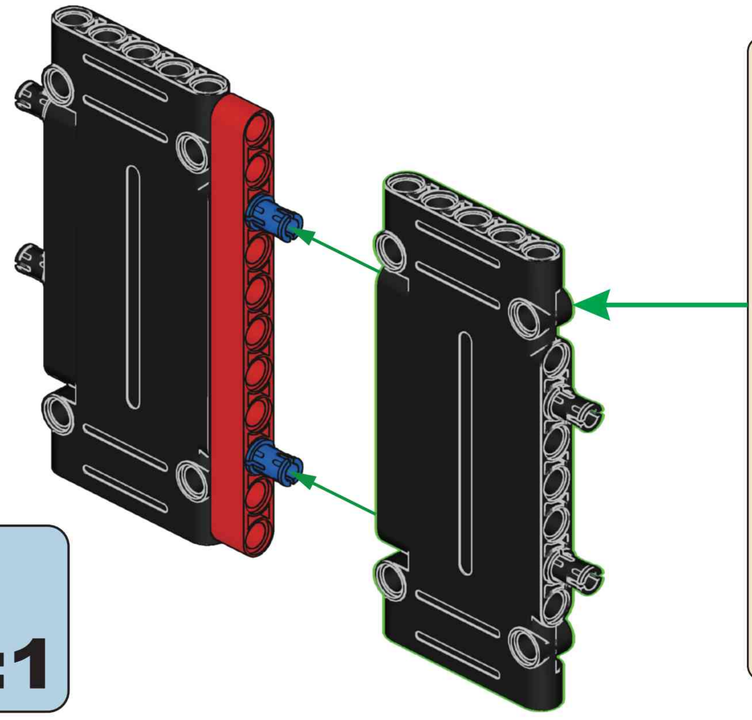

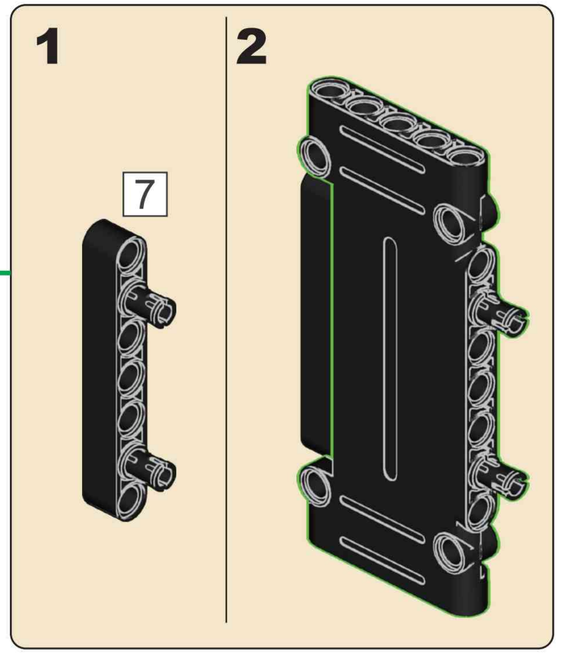

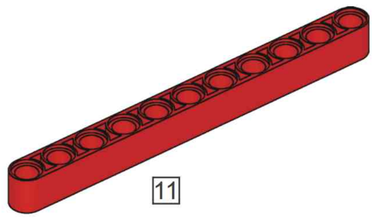

J64

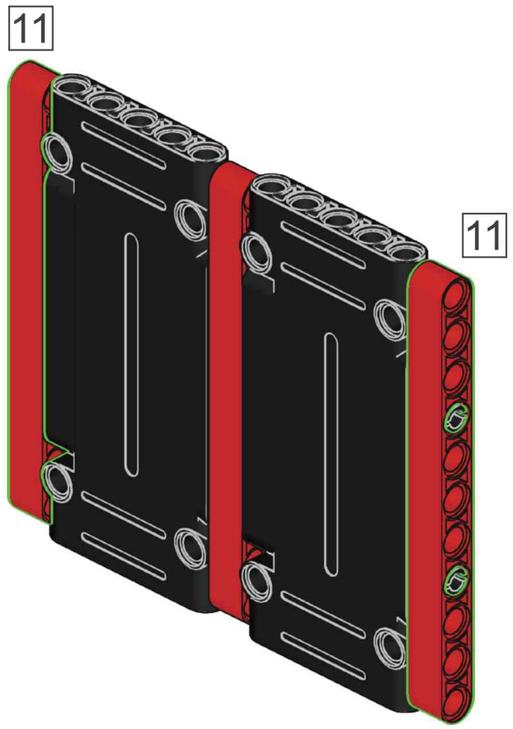

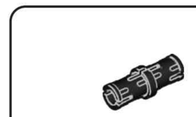

J65

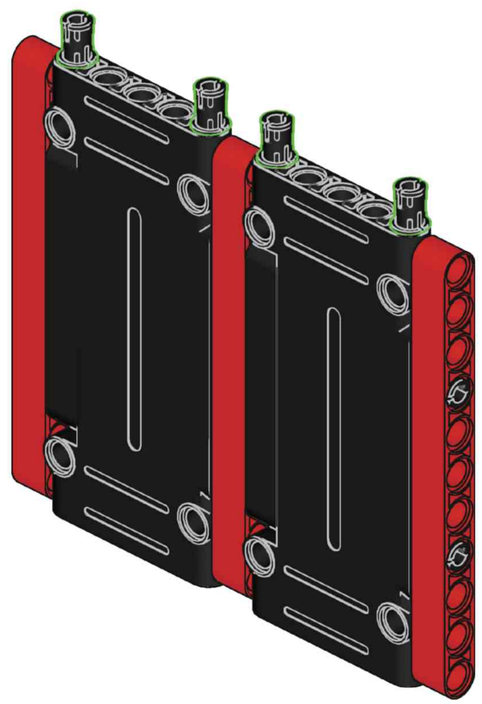

J66

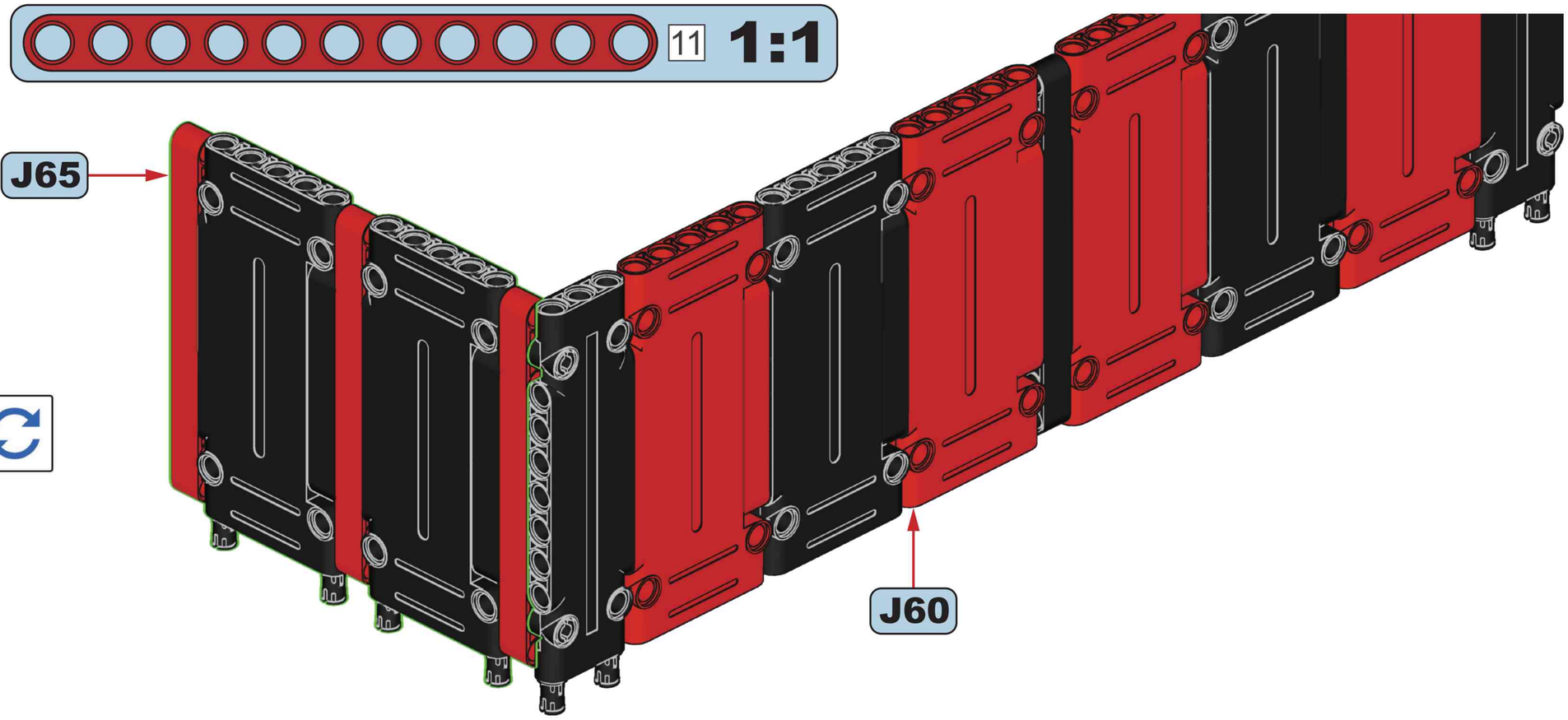

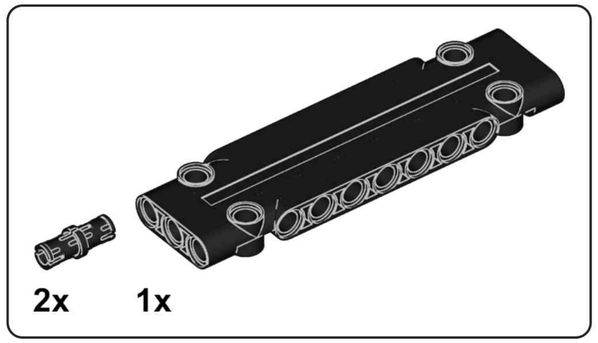

J67

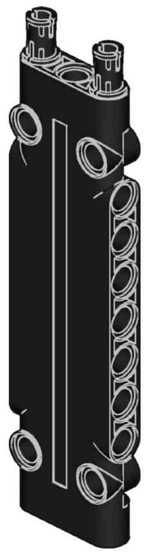

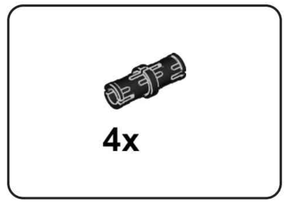

J68

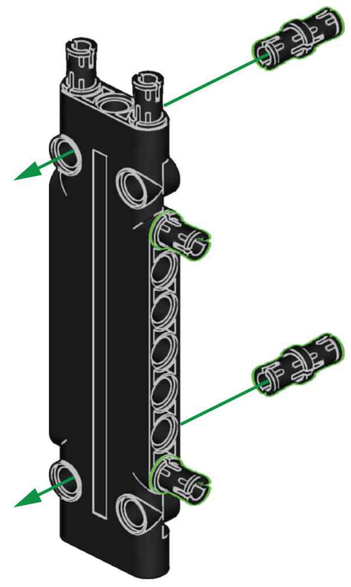

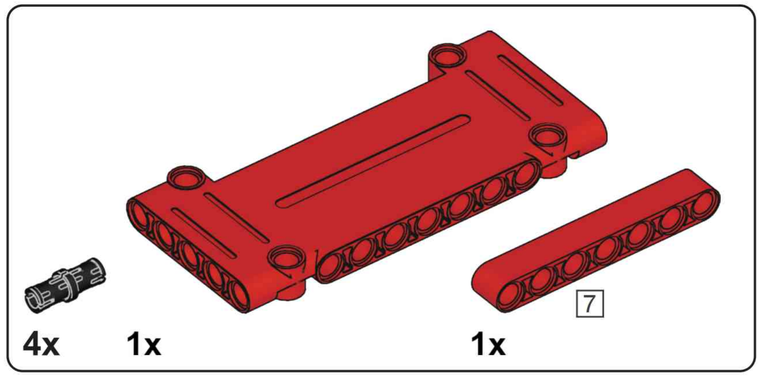

J69

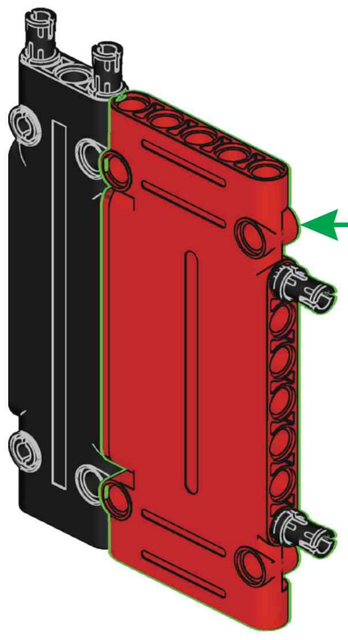

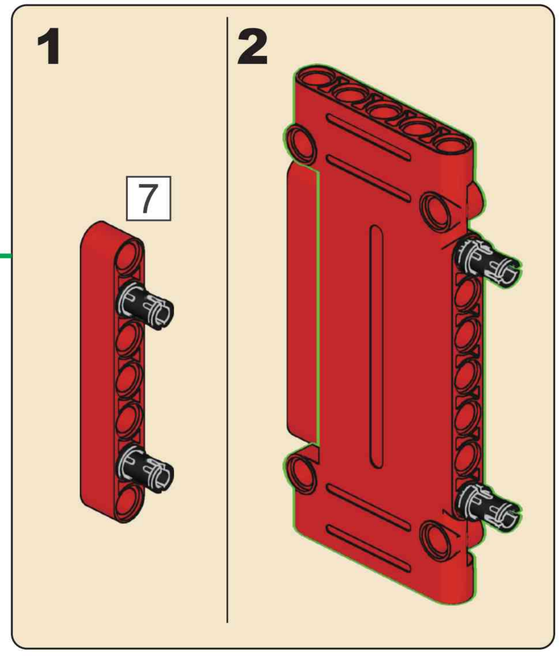

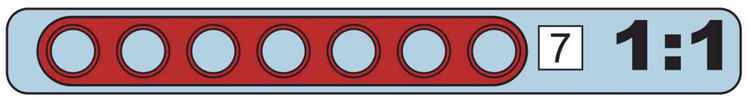

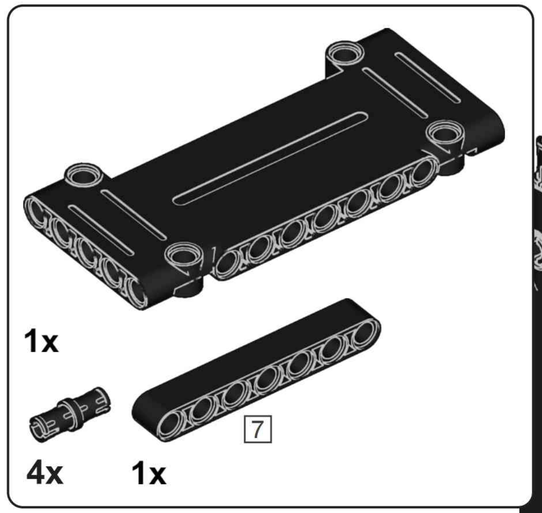

J70

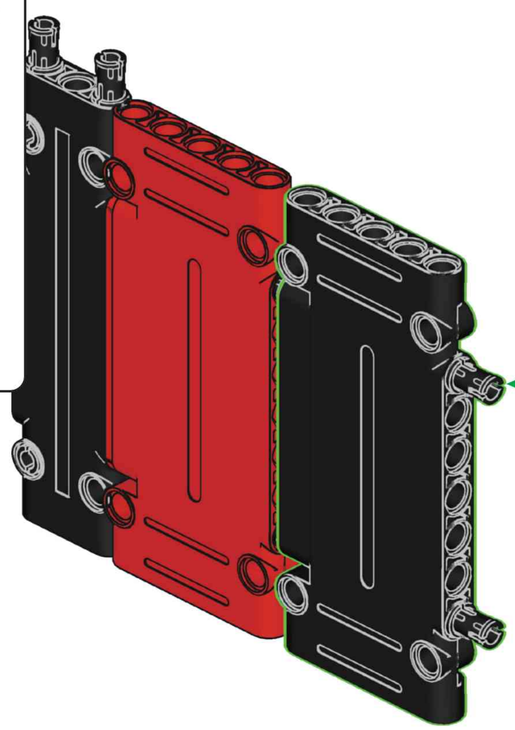

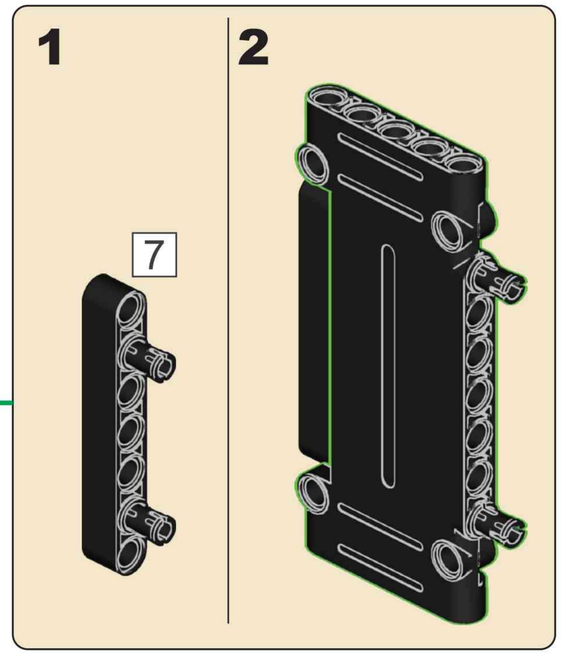

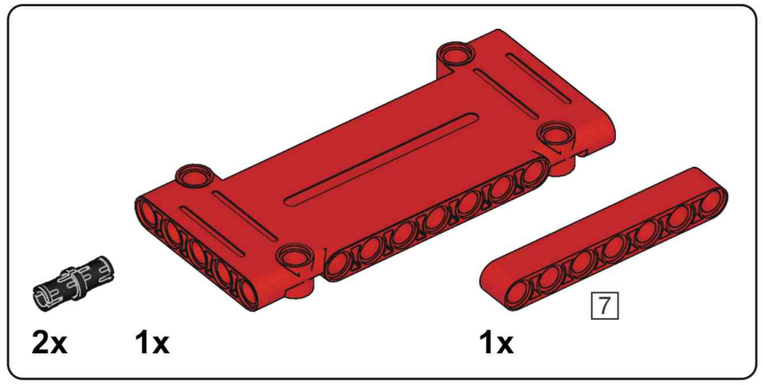

J71

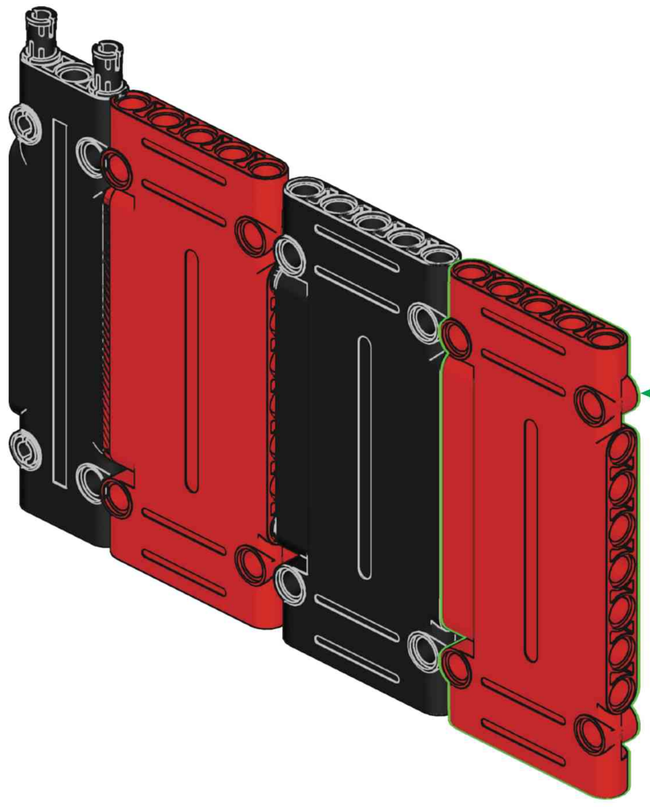

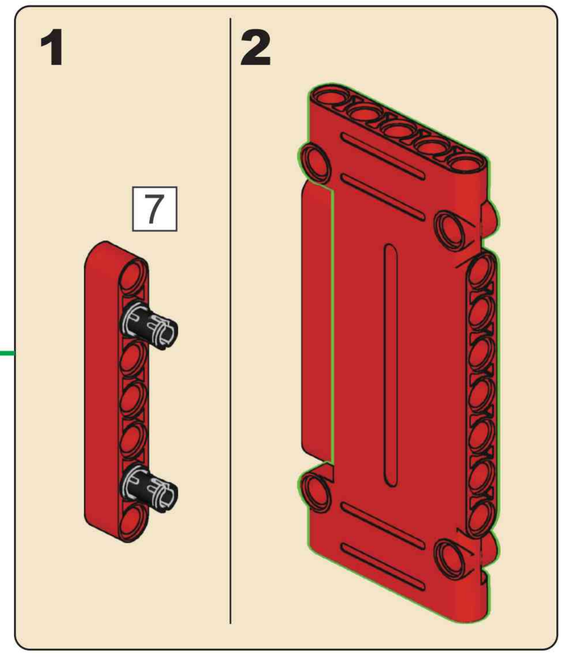

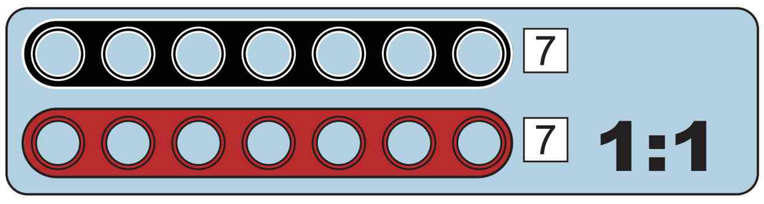

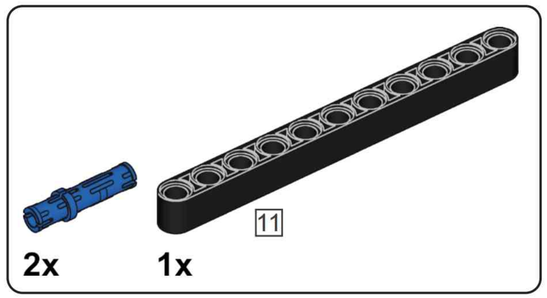

J72

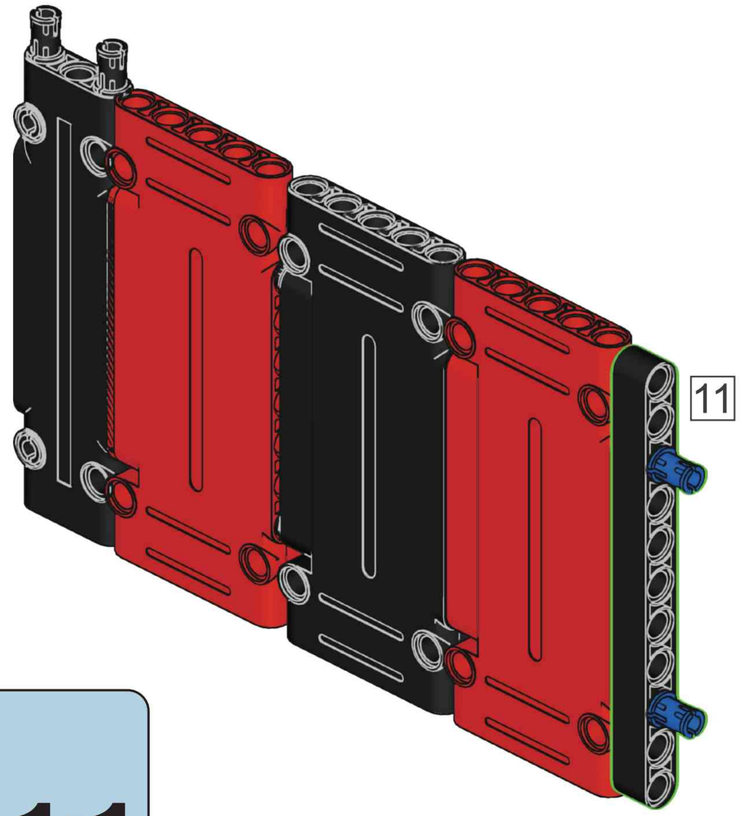

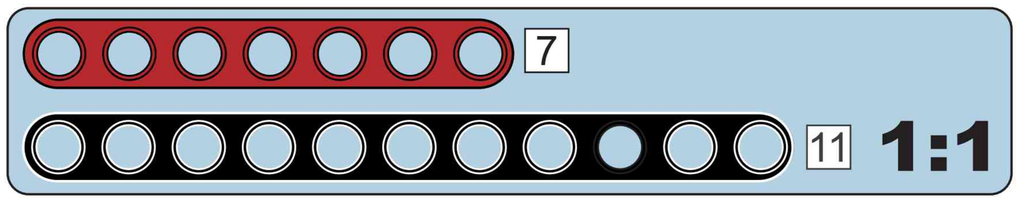

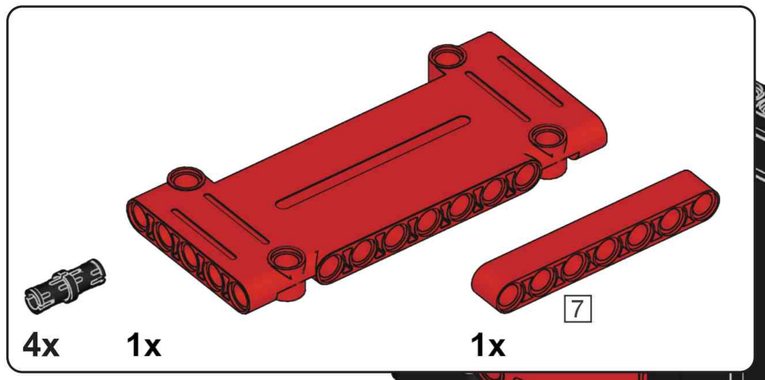

J73

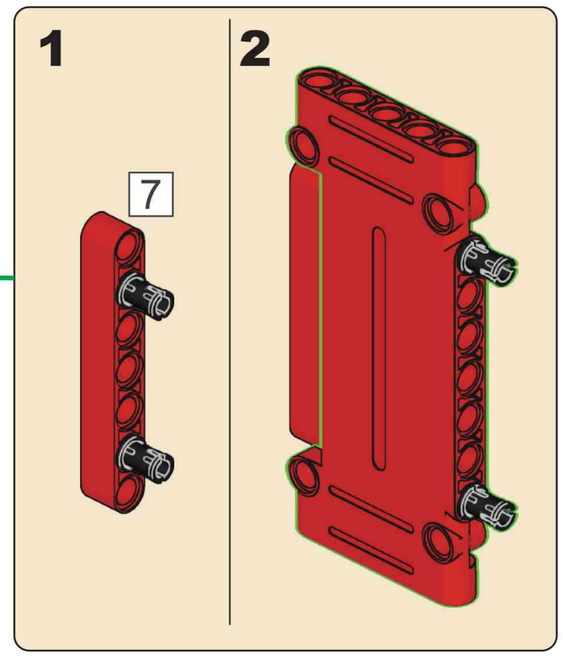

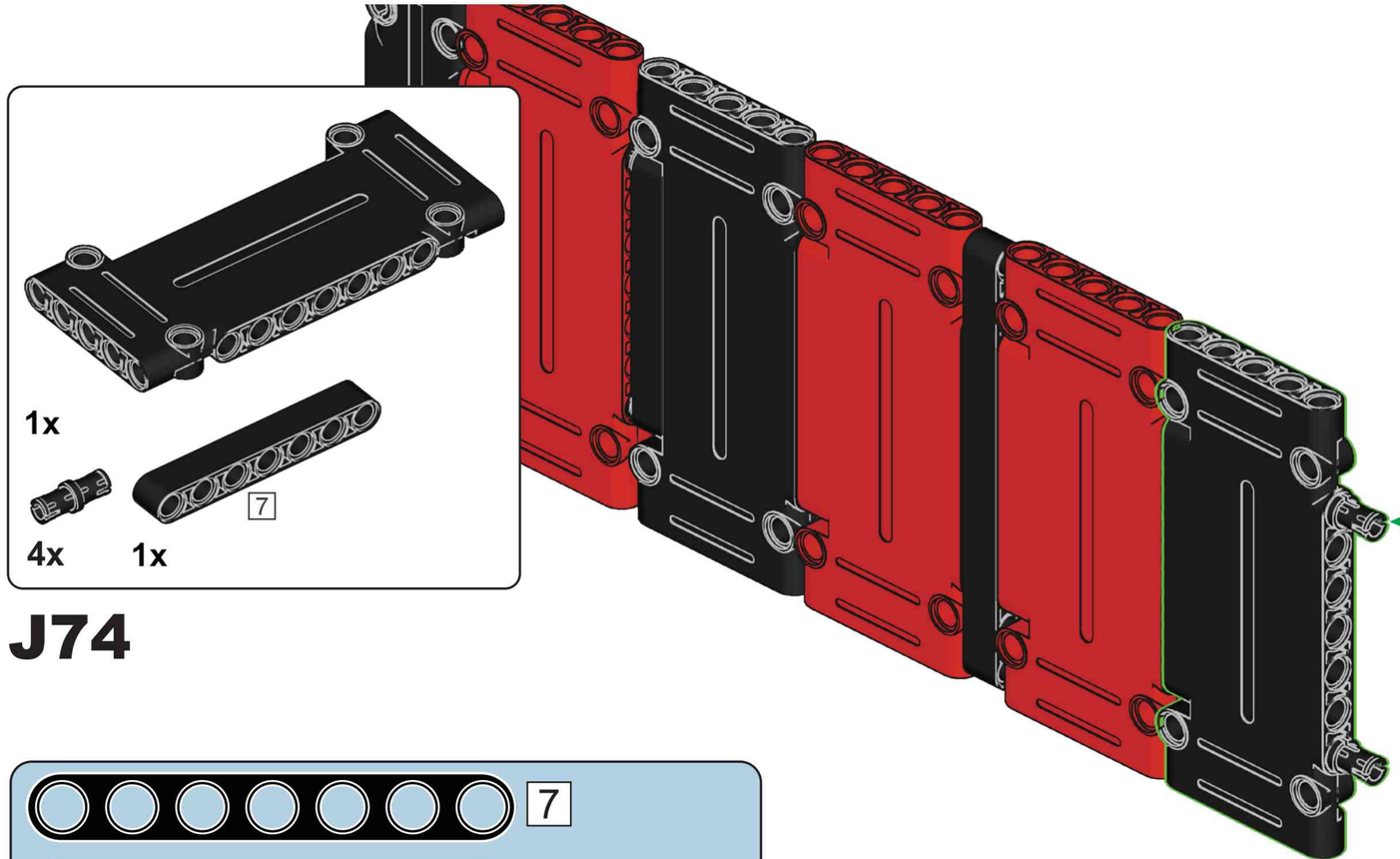

J74

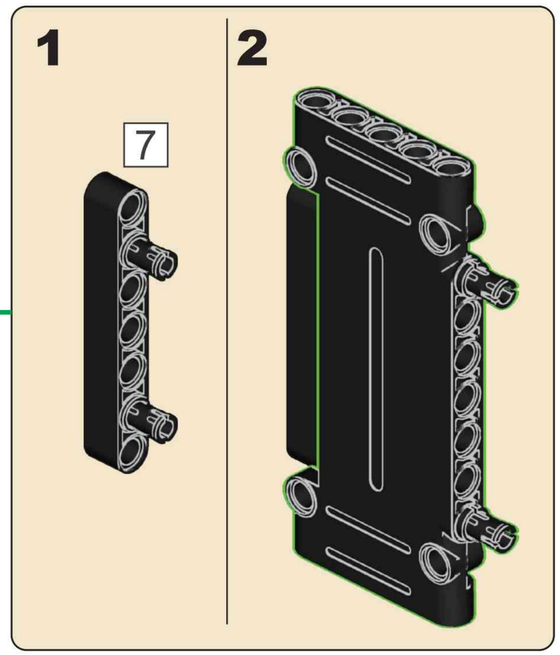

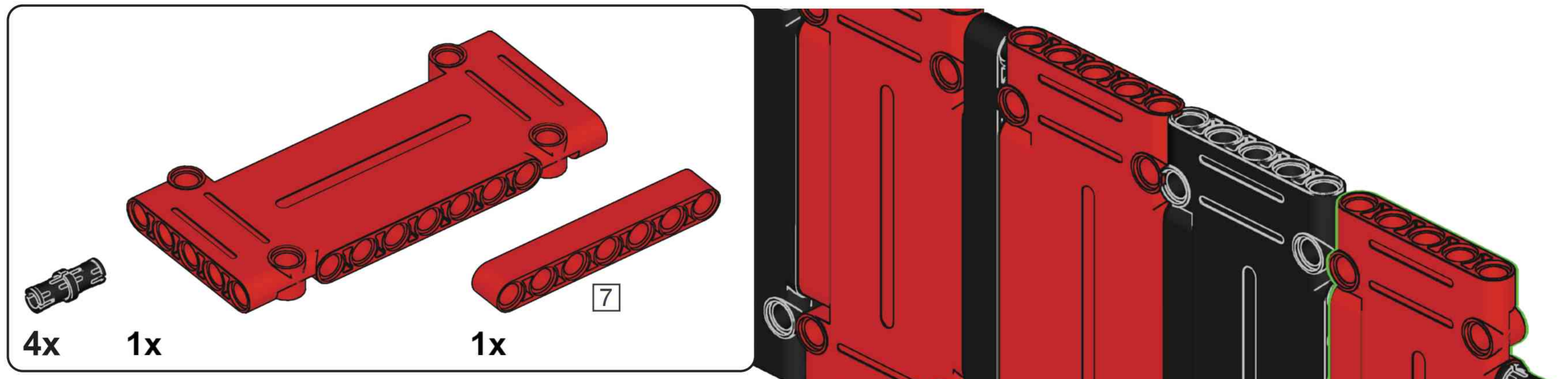

J75

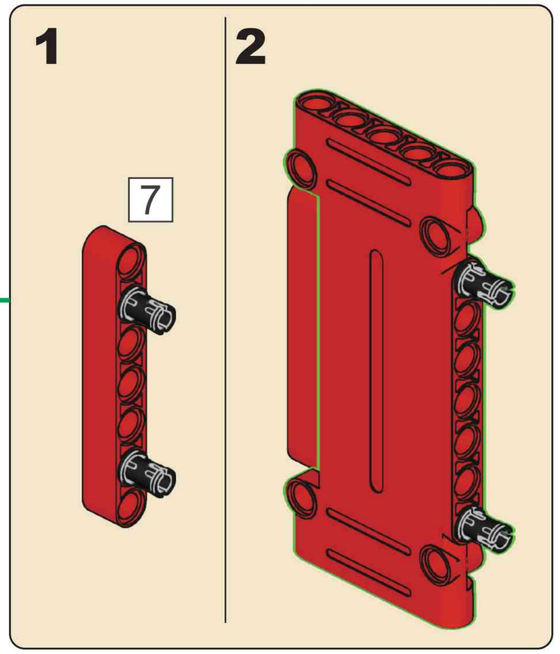

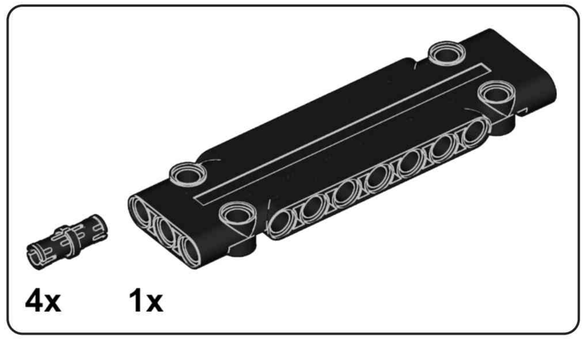

J76

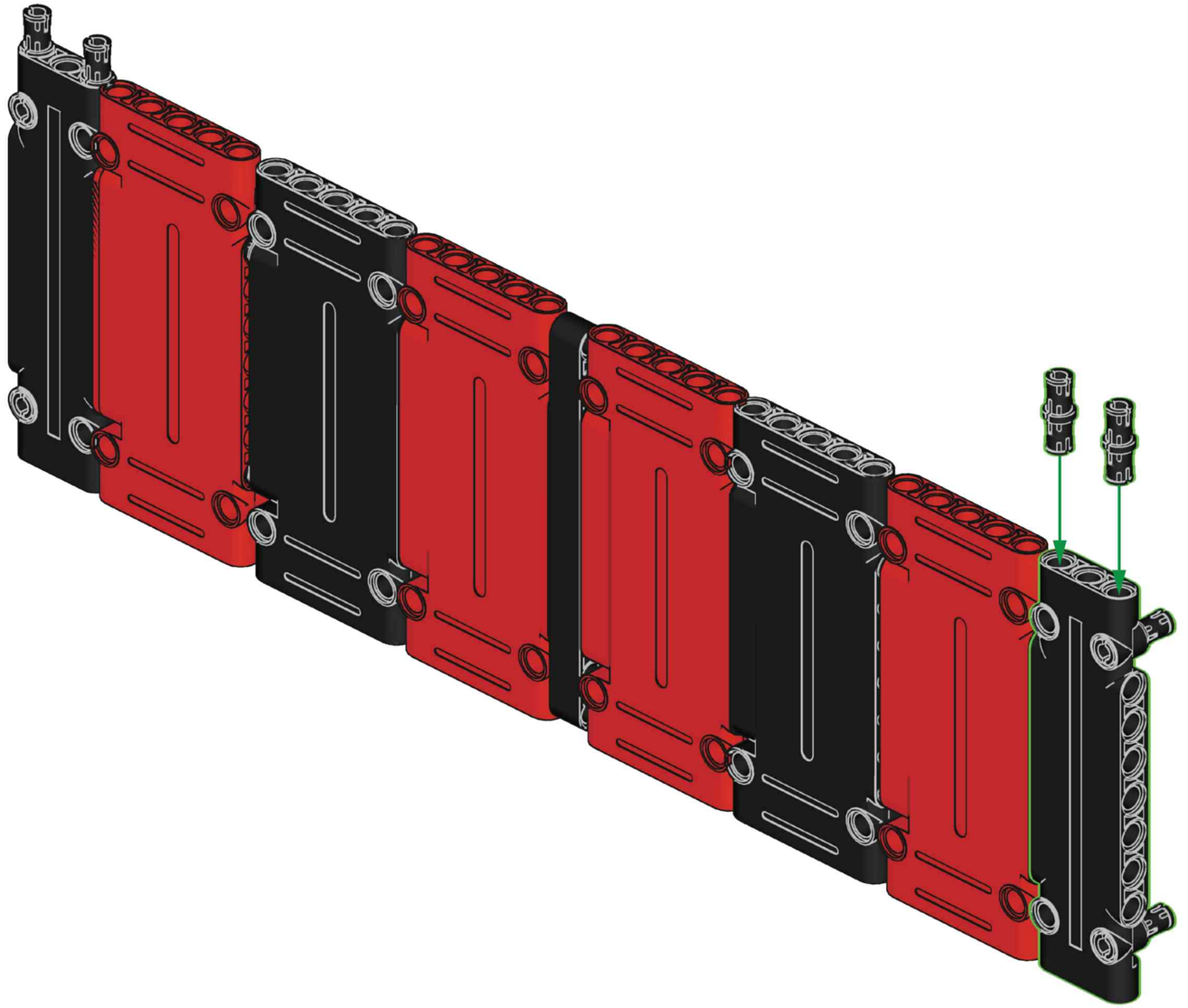

J77

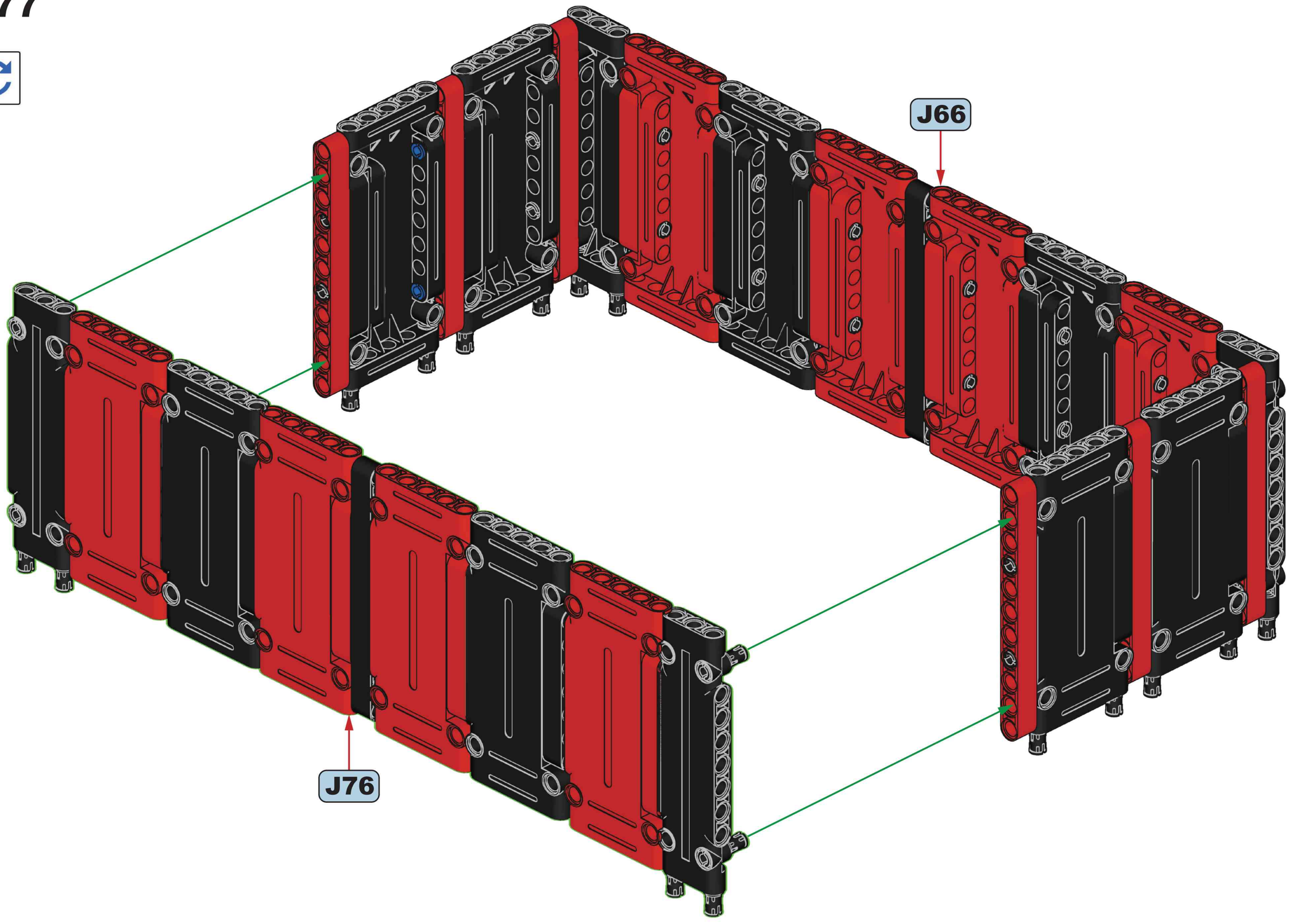

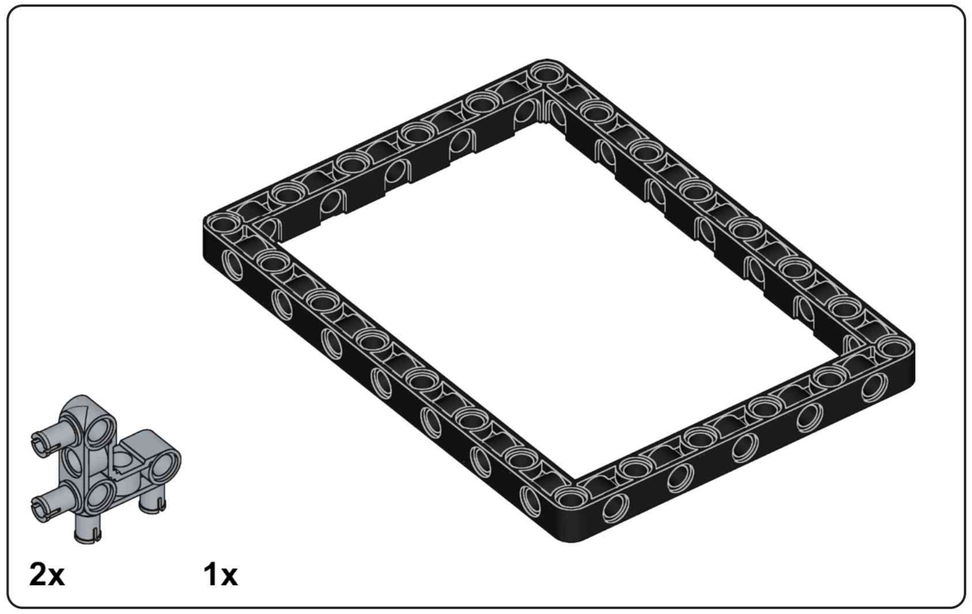

J78

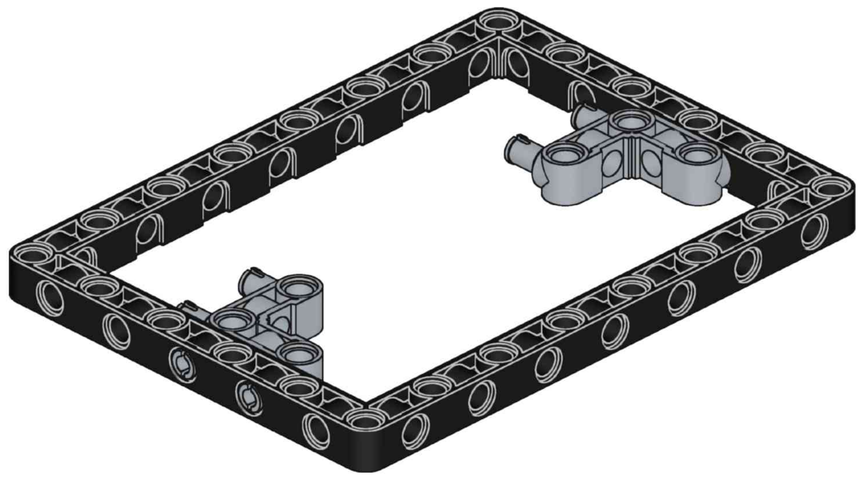

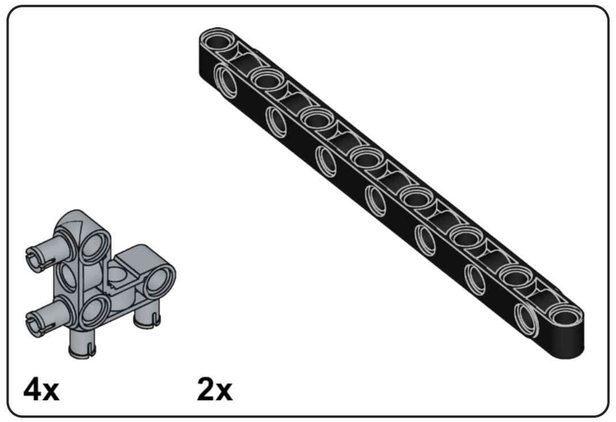

J79

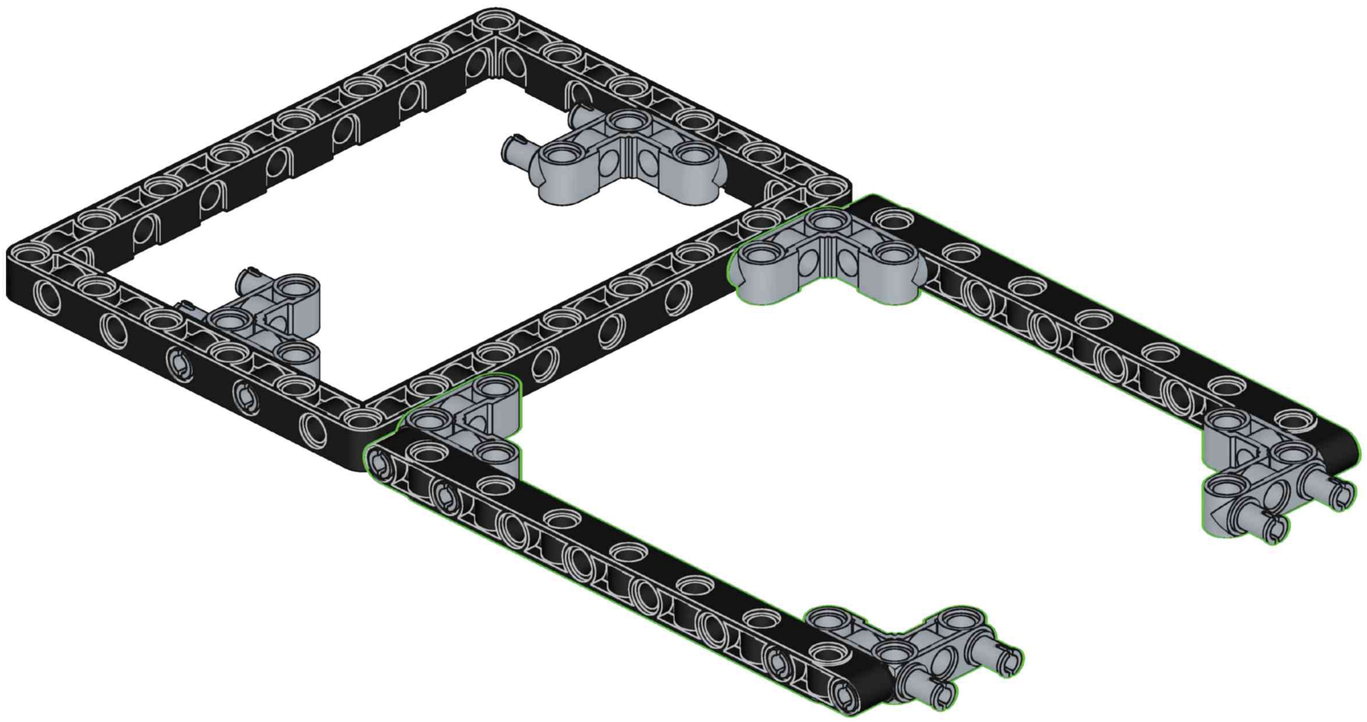

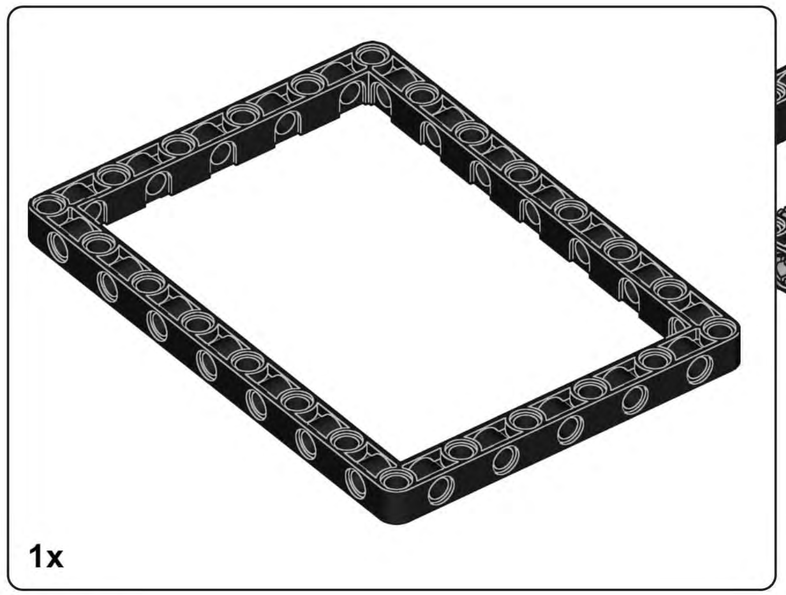

J80

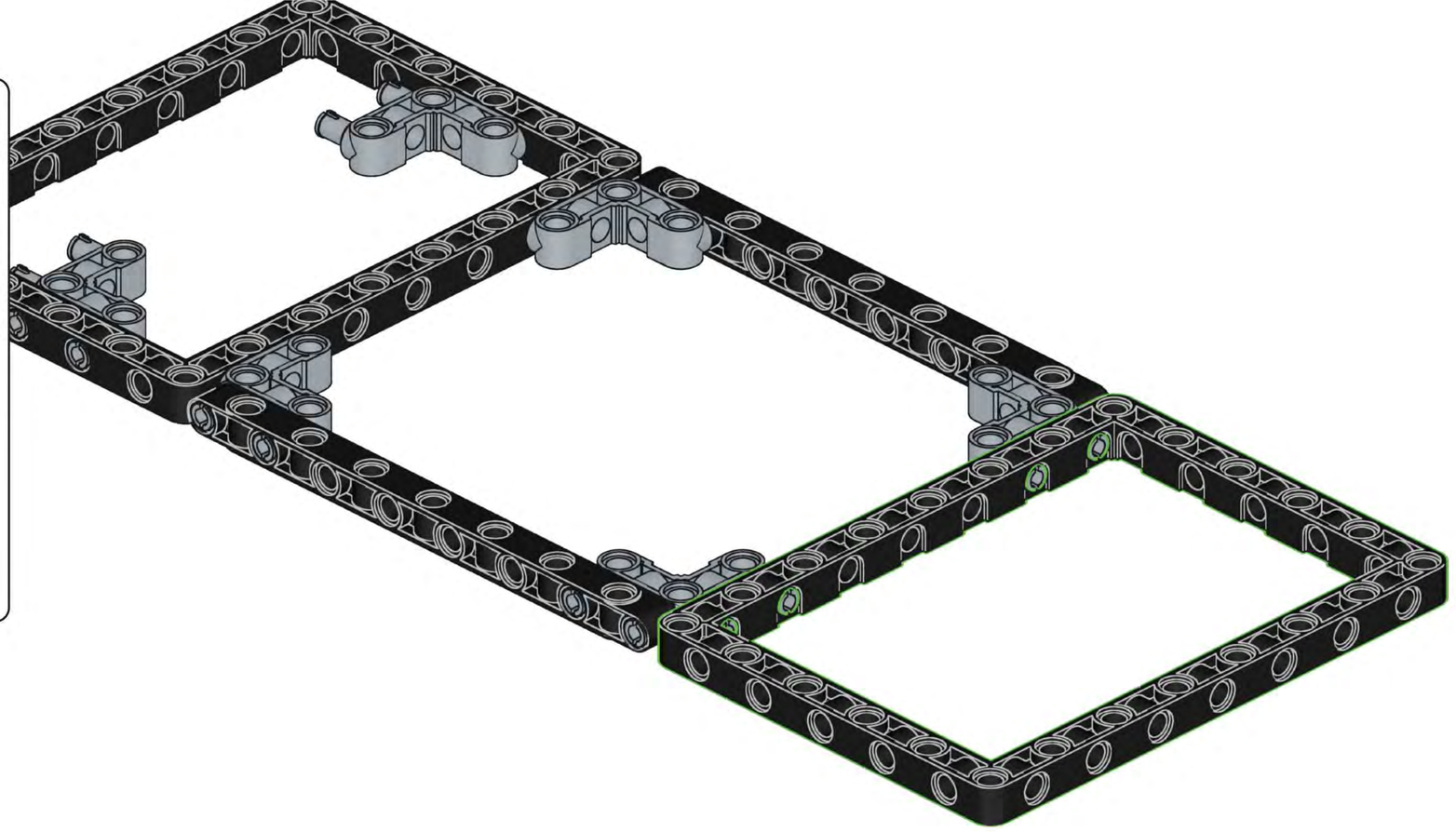

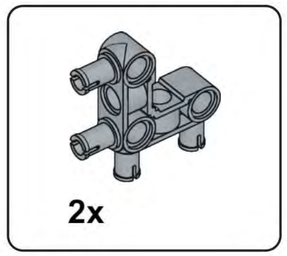

J81

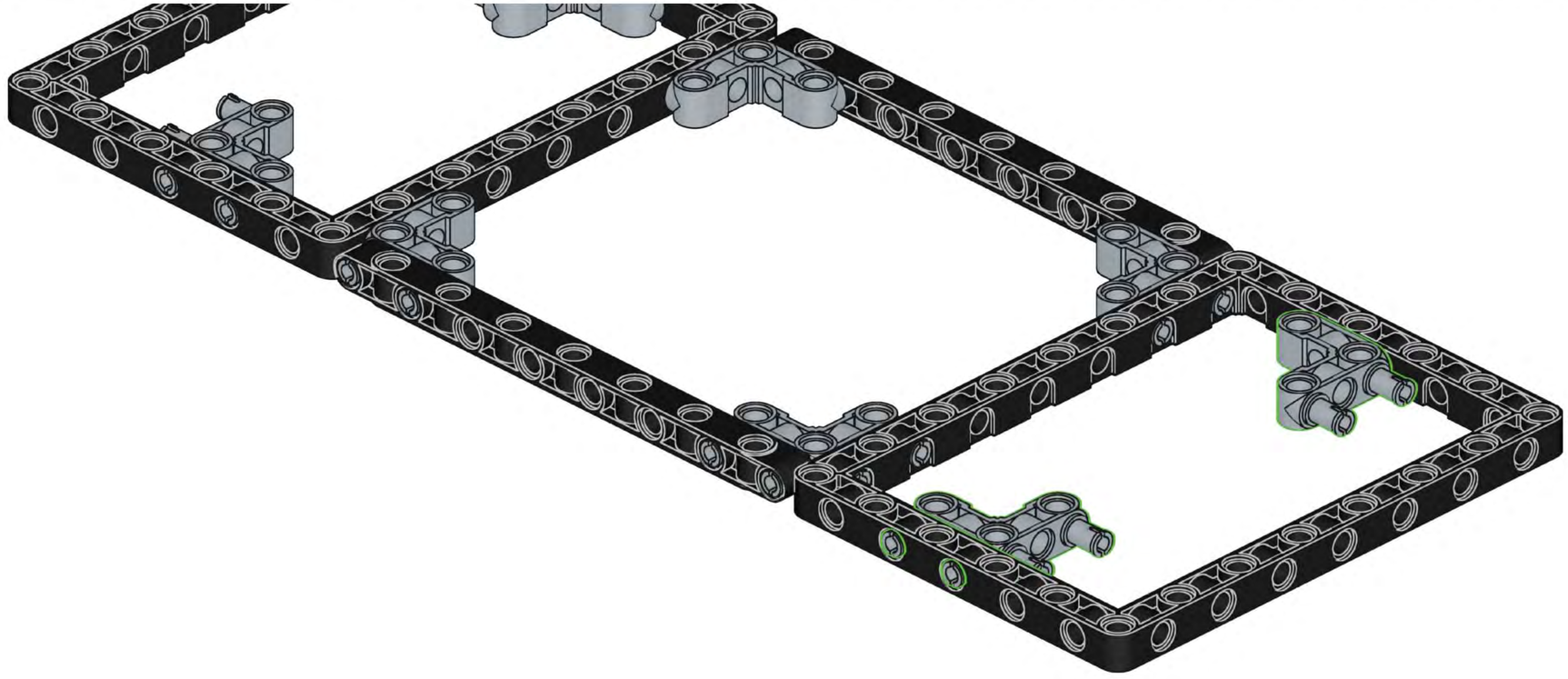

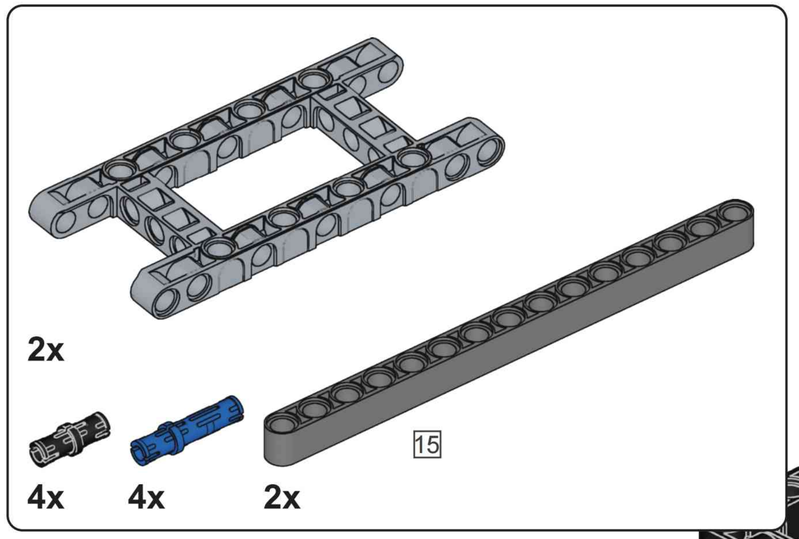

J82

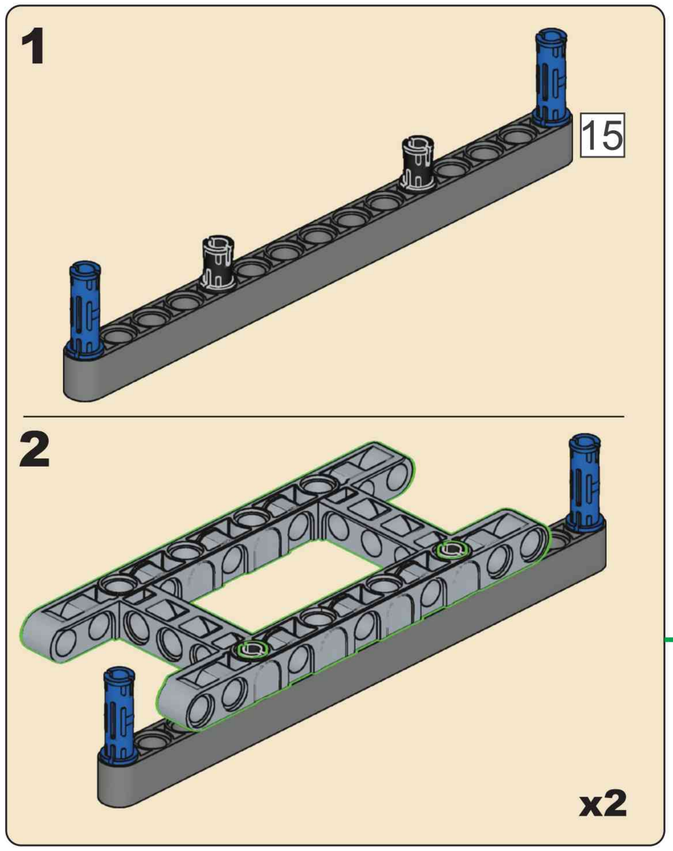

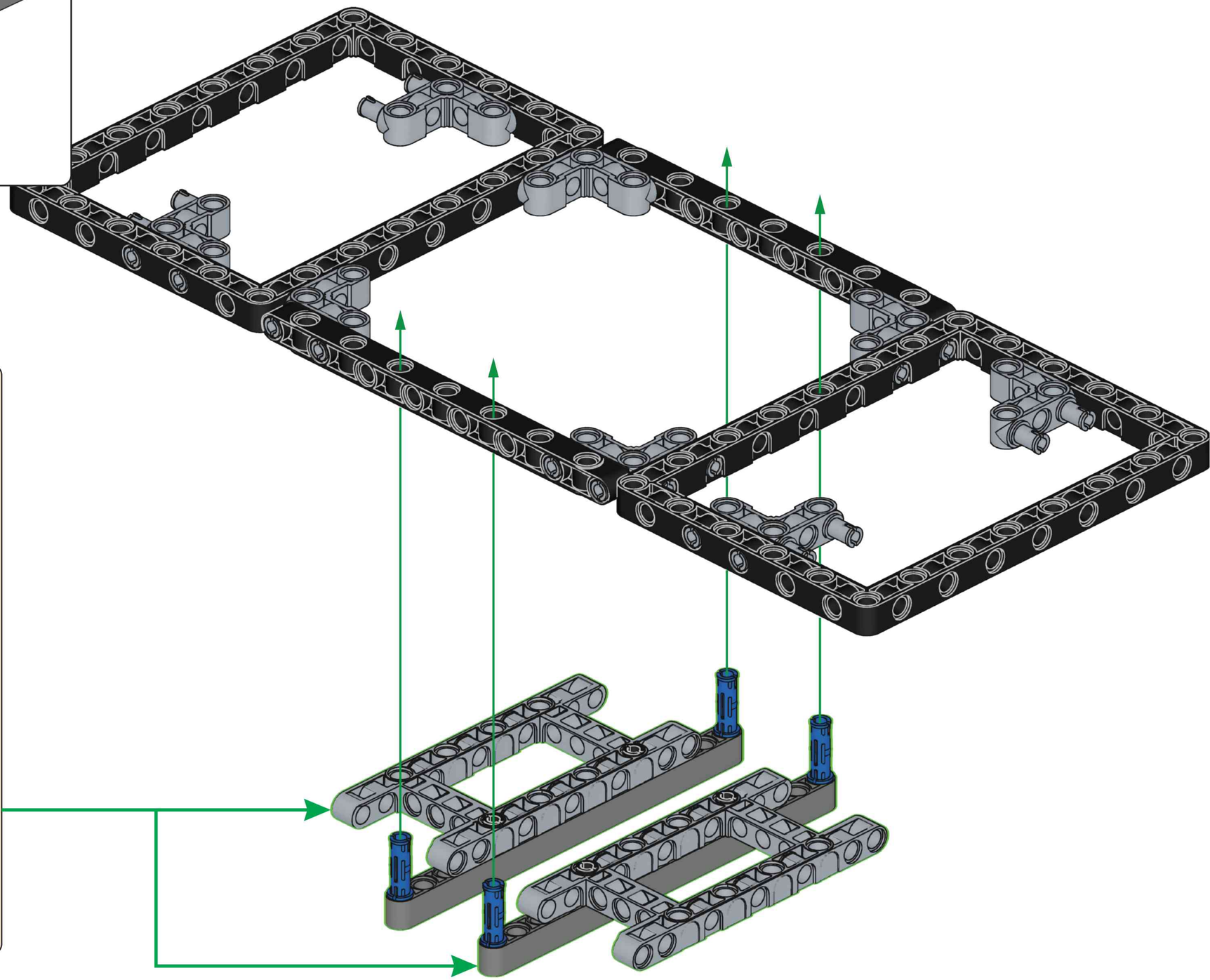

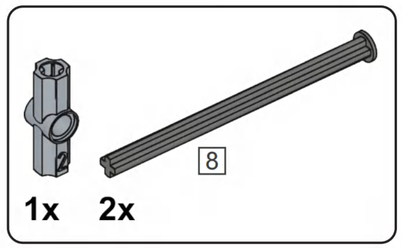

J83

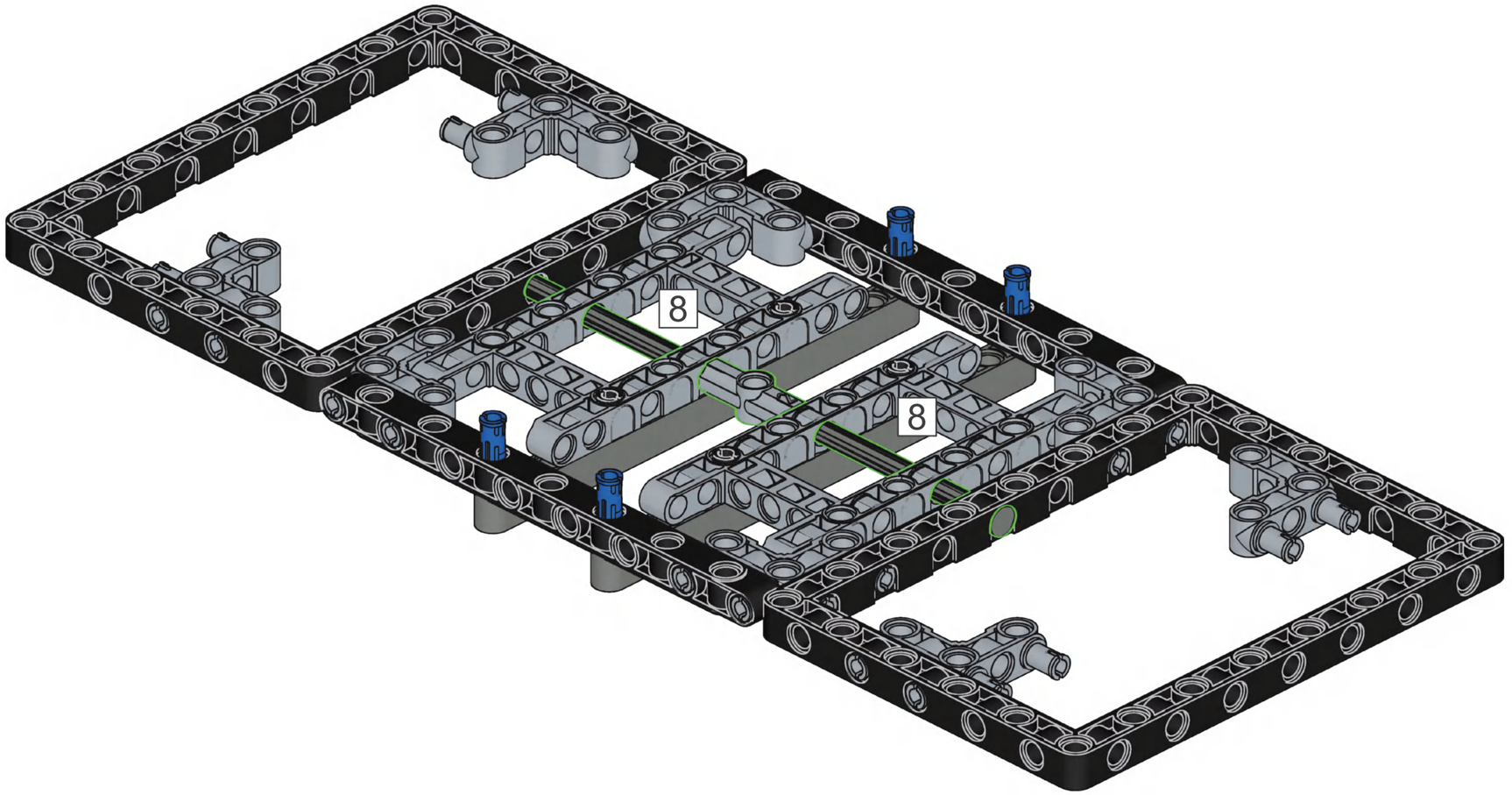

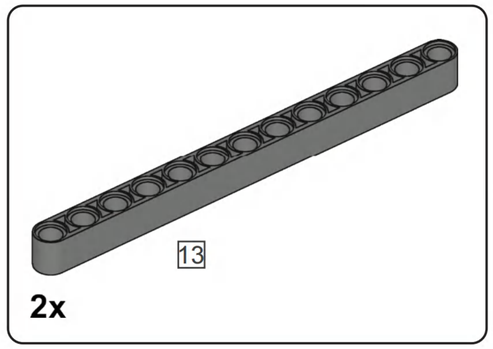

J84

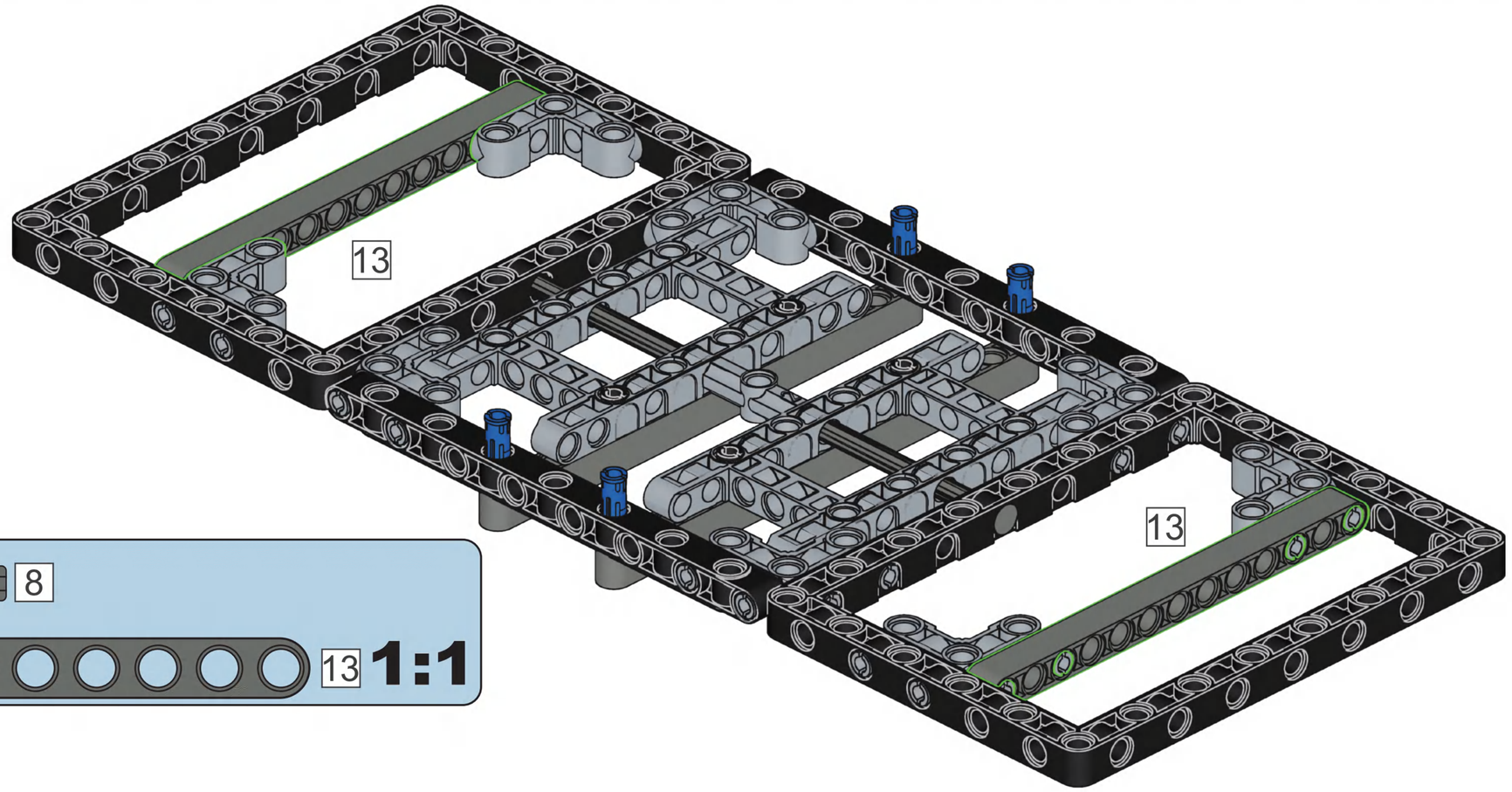

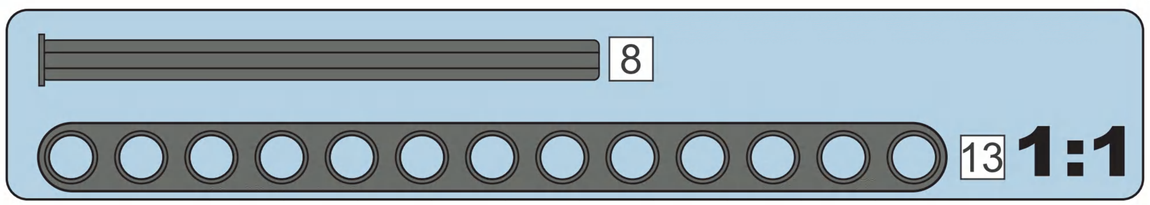

J85



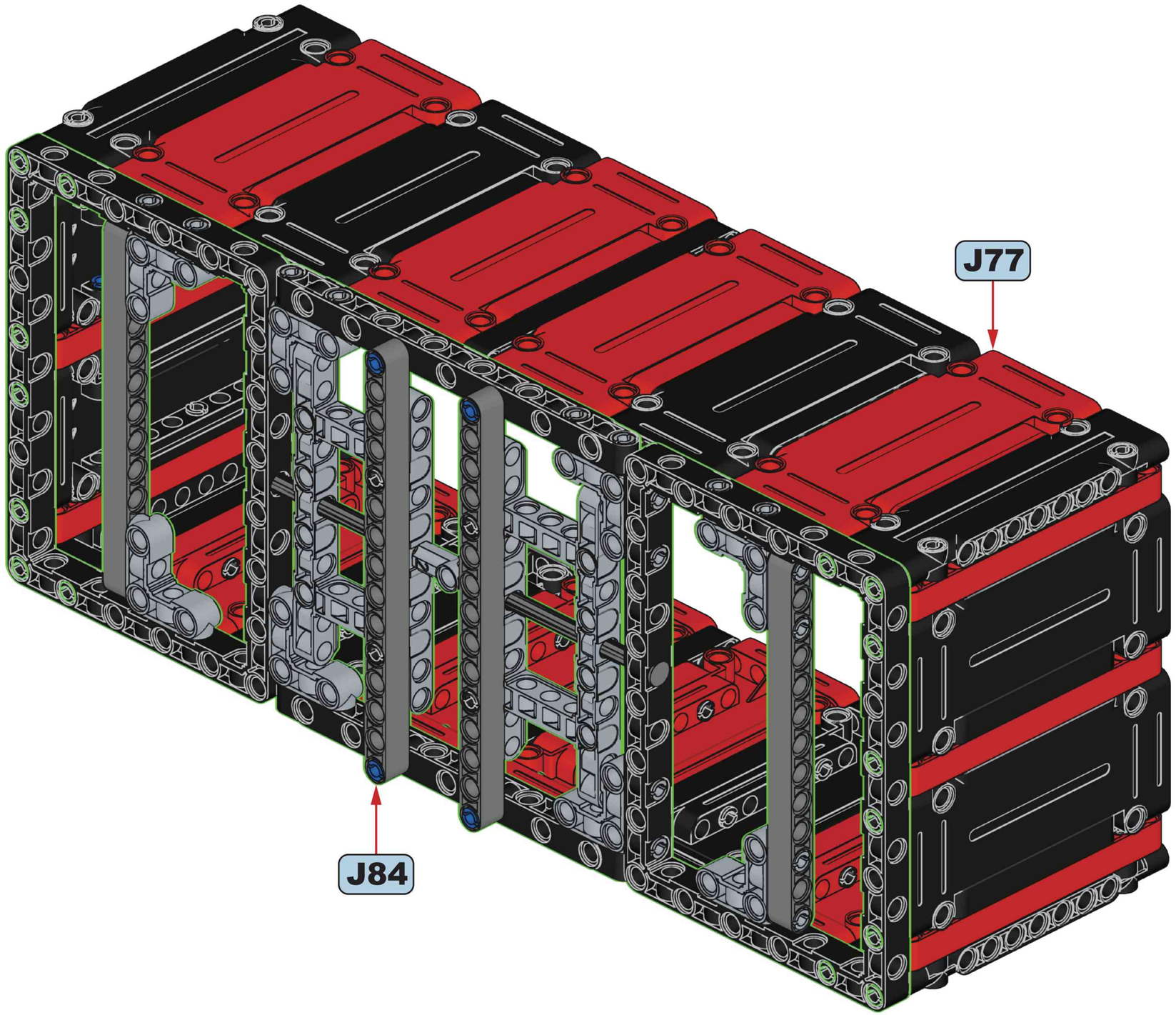

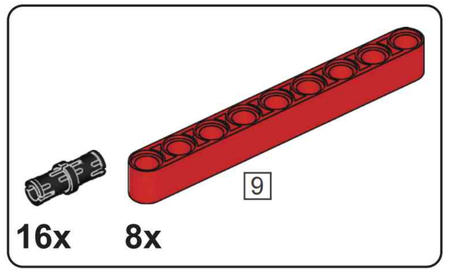

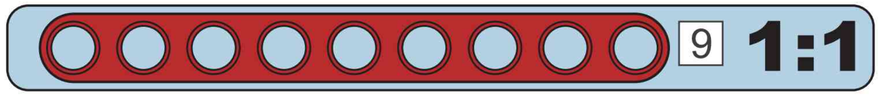

J86

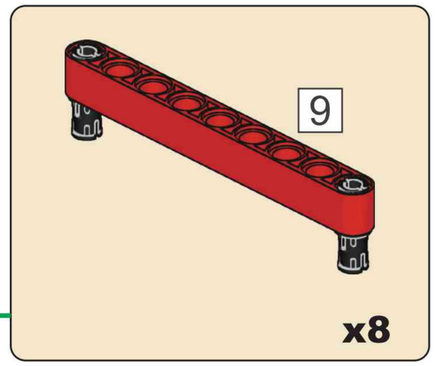

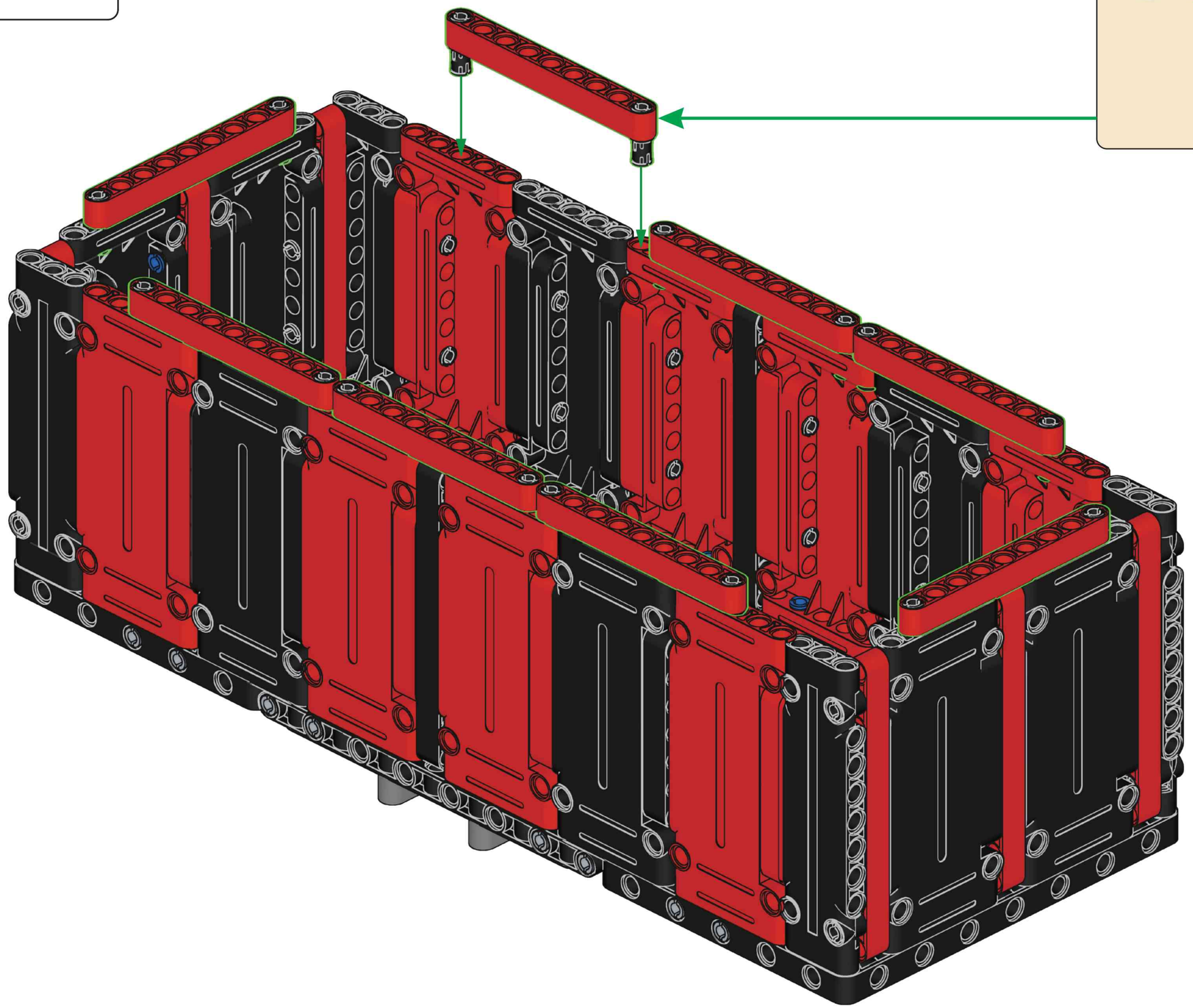

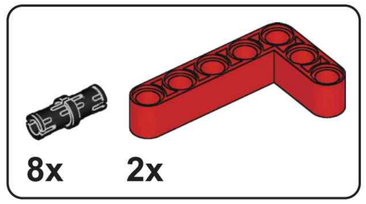

J87

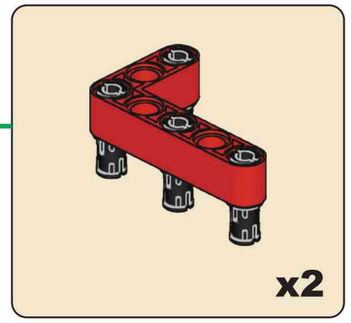

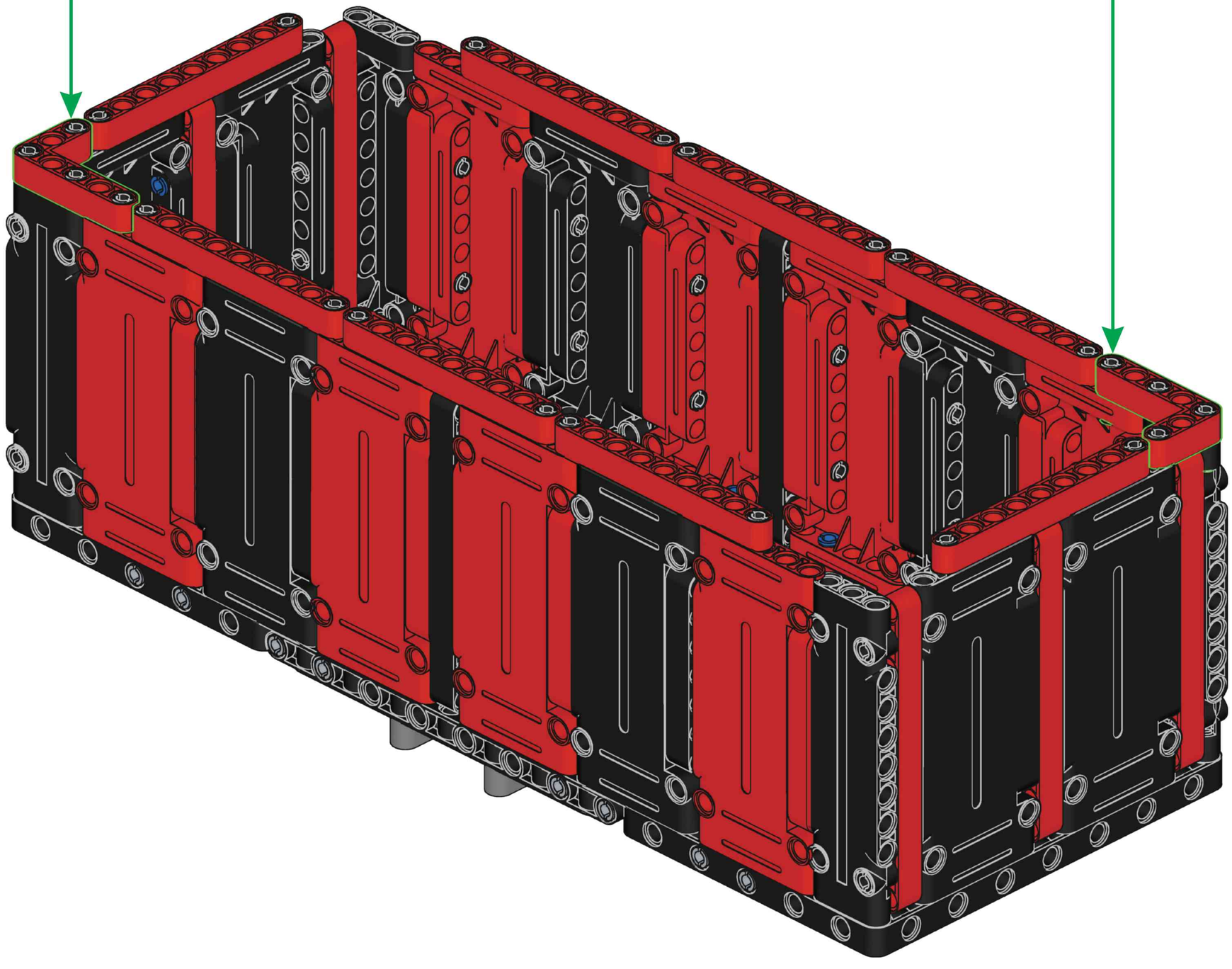

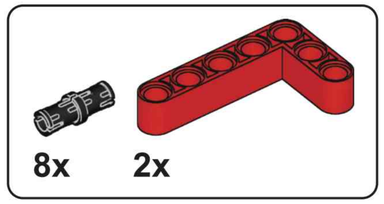

J88

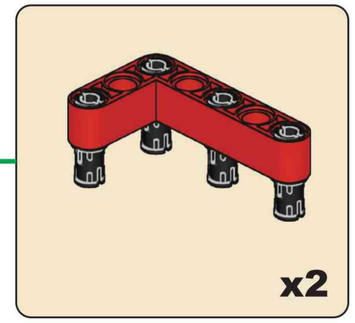

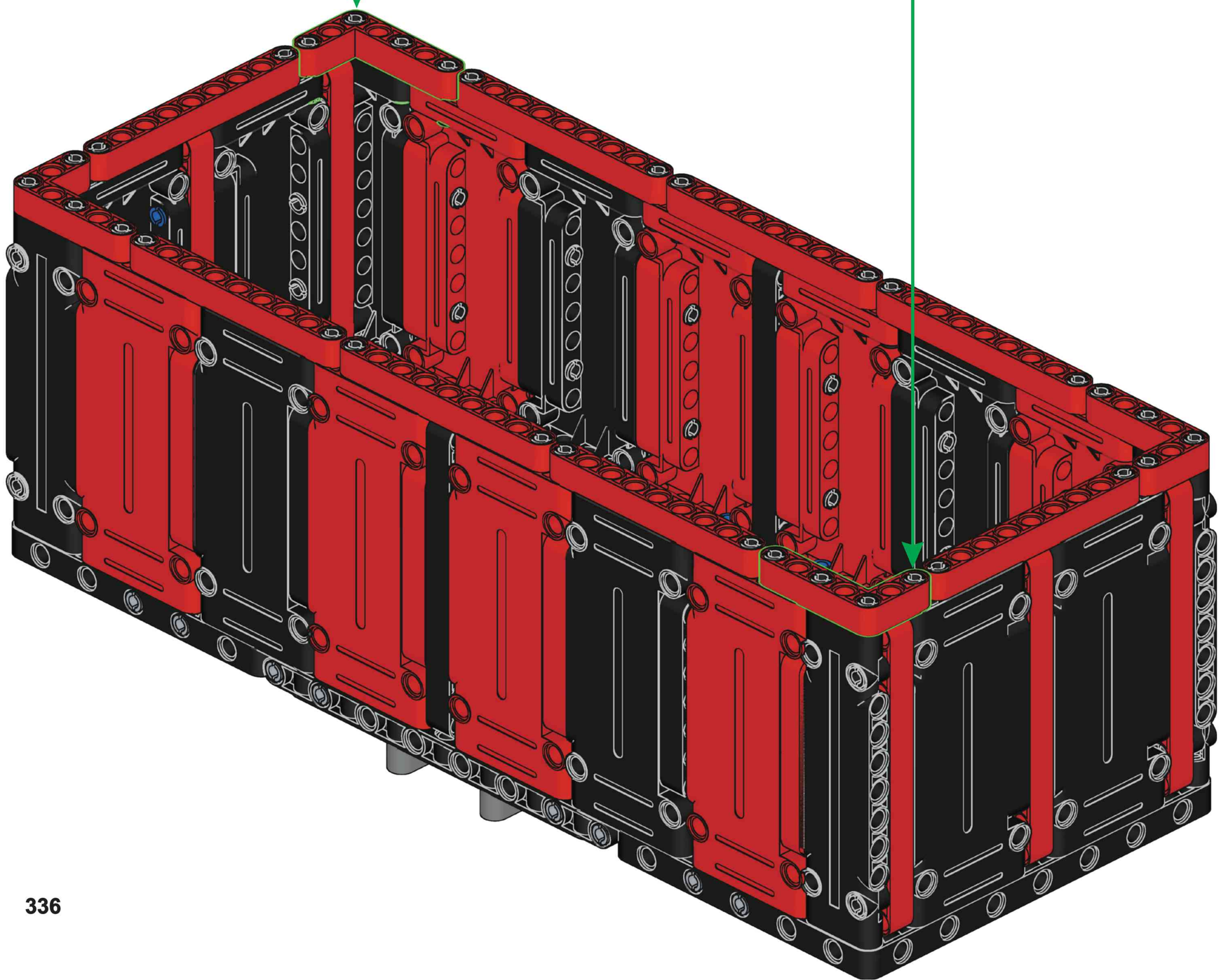

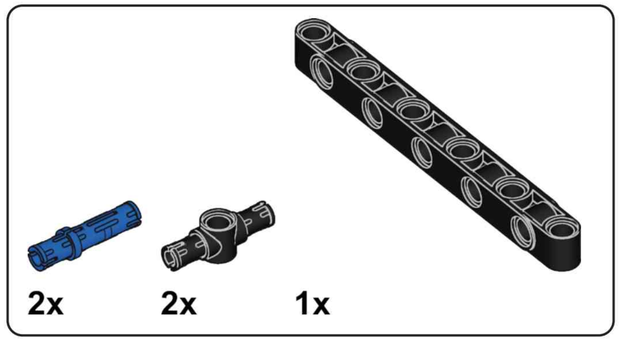

J89

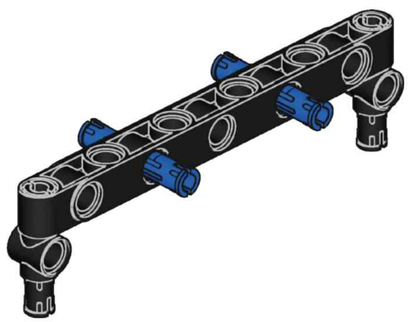

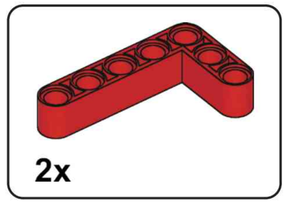

J90

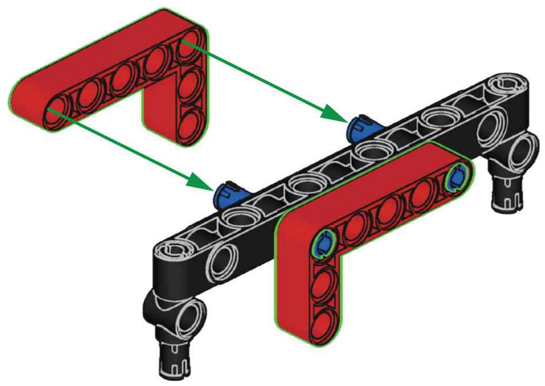

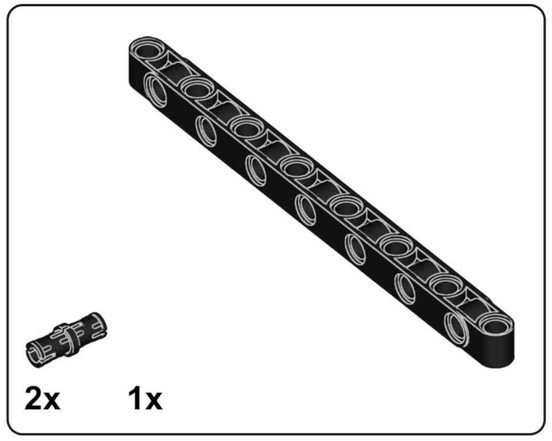

J91

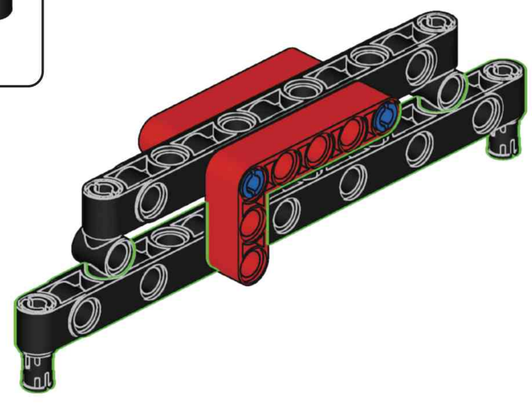

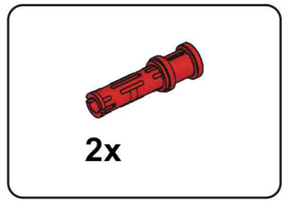

J92

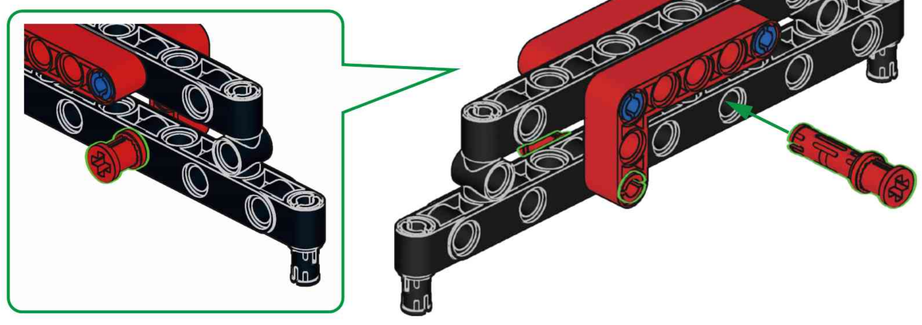

J93

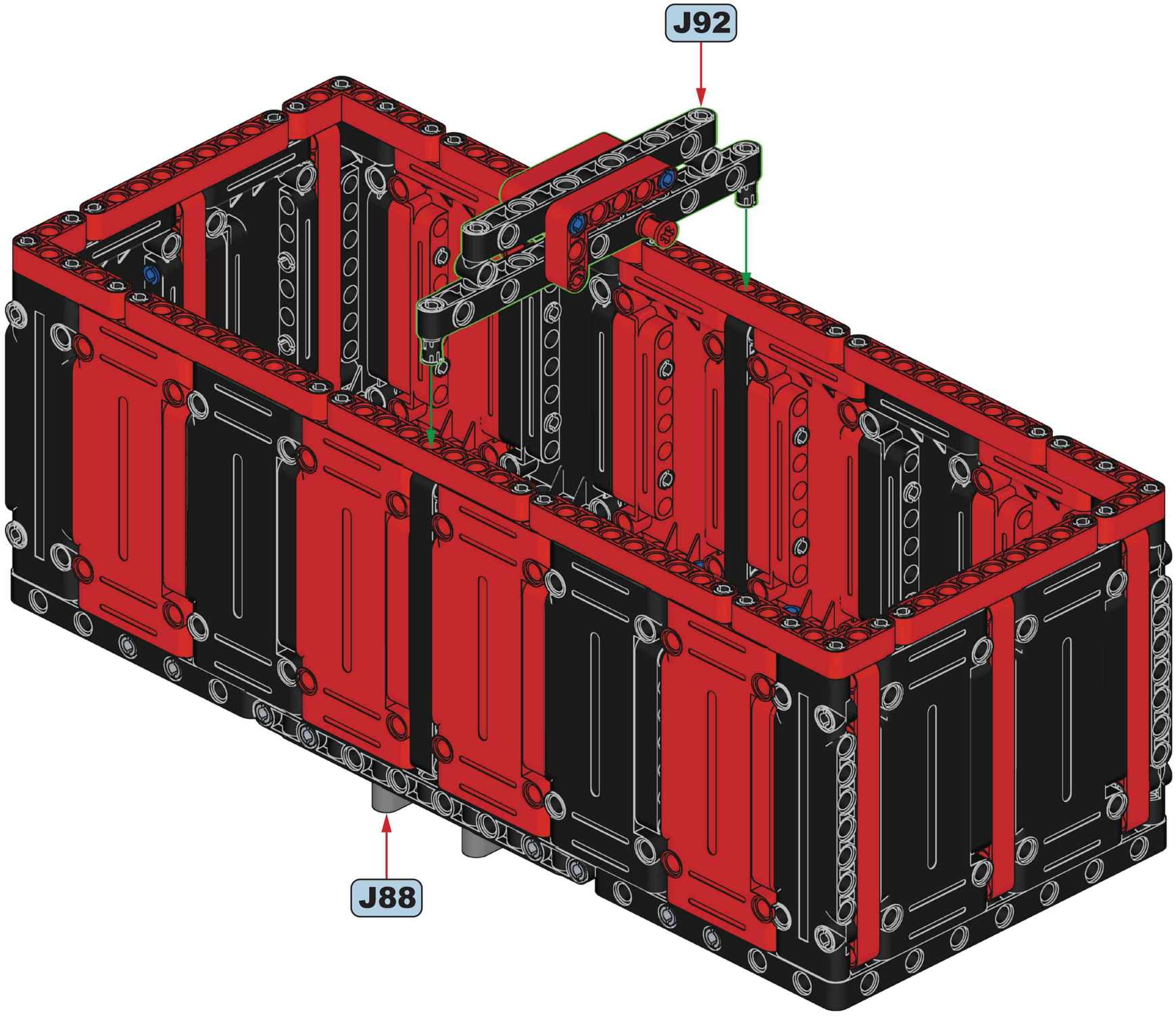

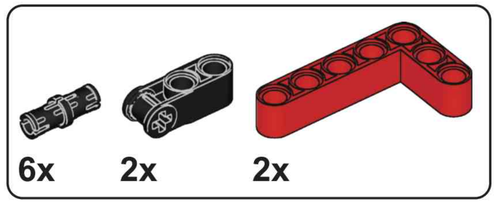

J94

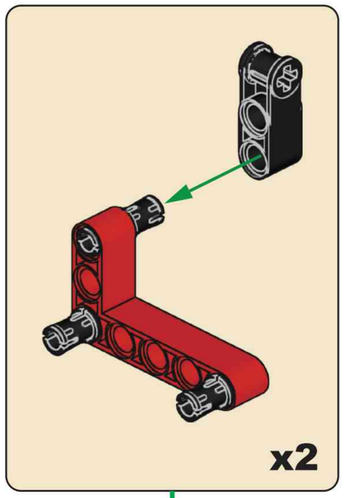

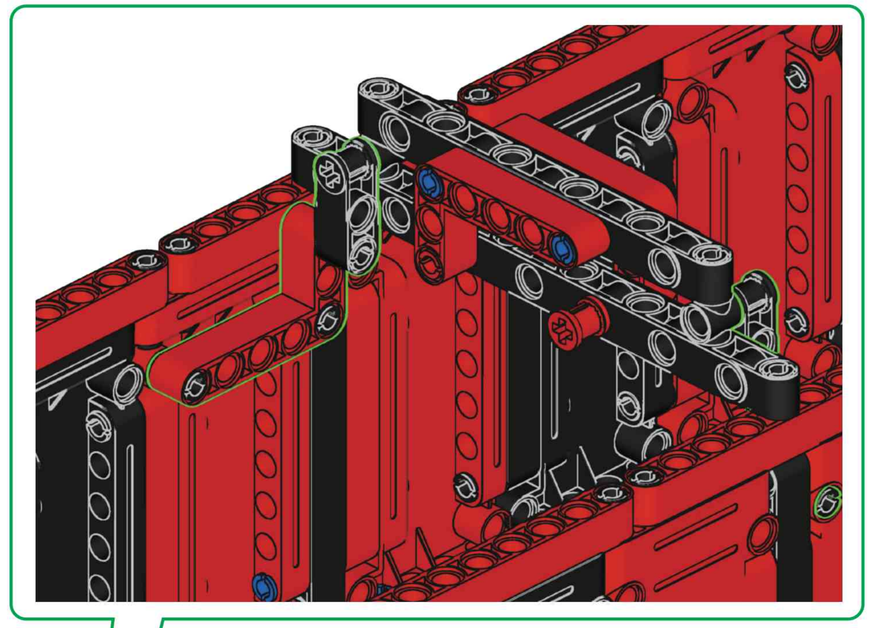

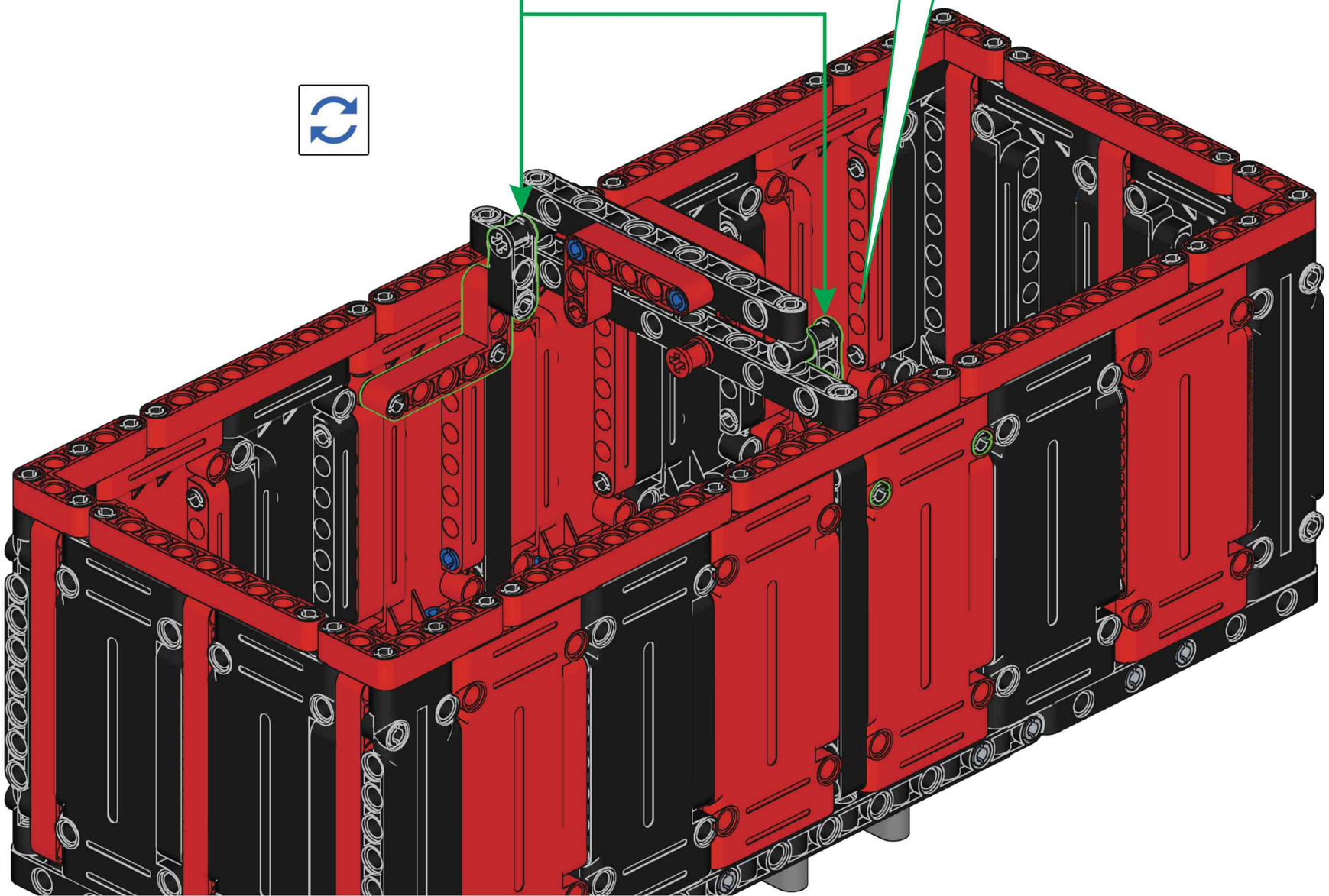

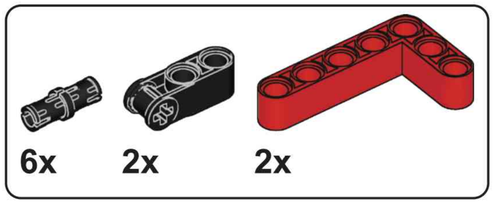

J95

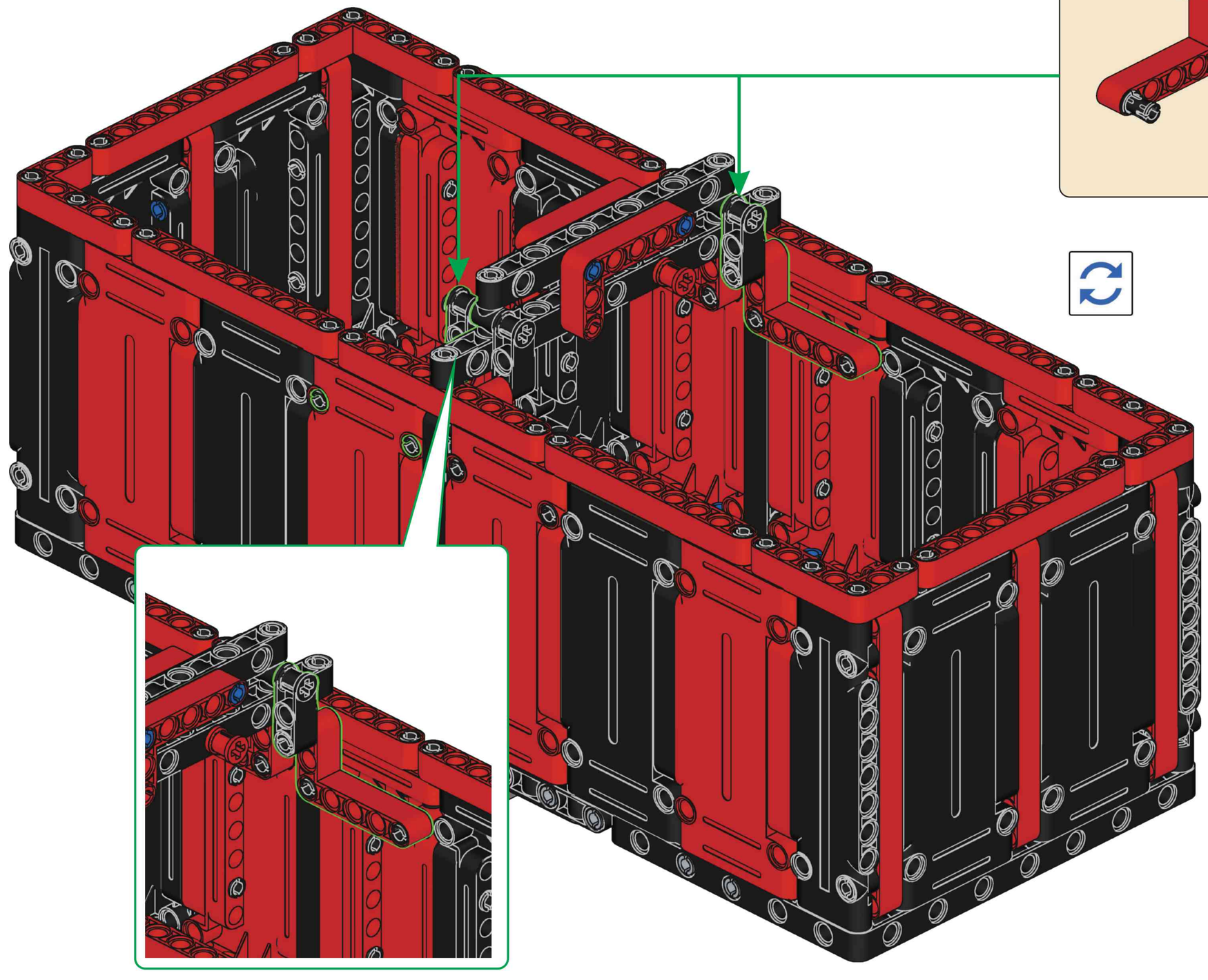

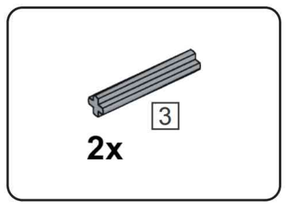

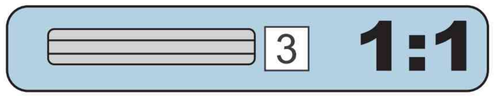

J96

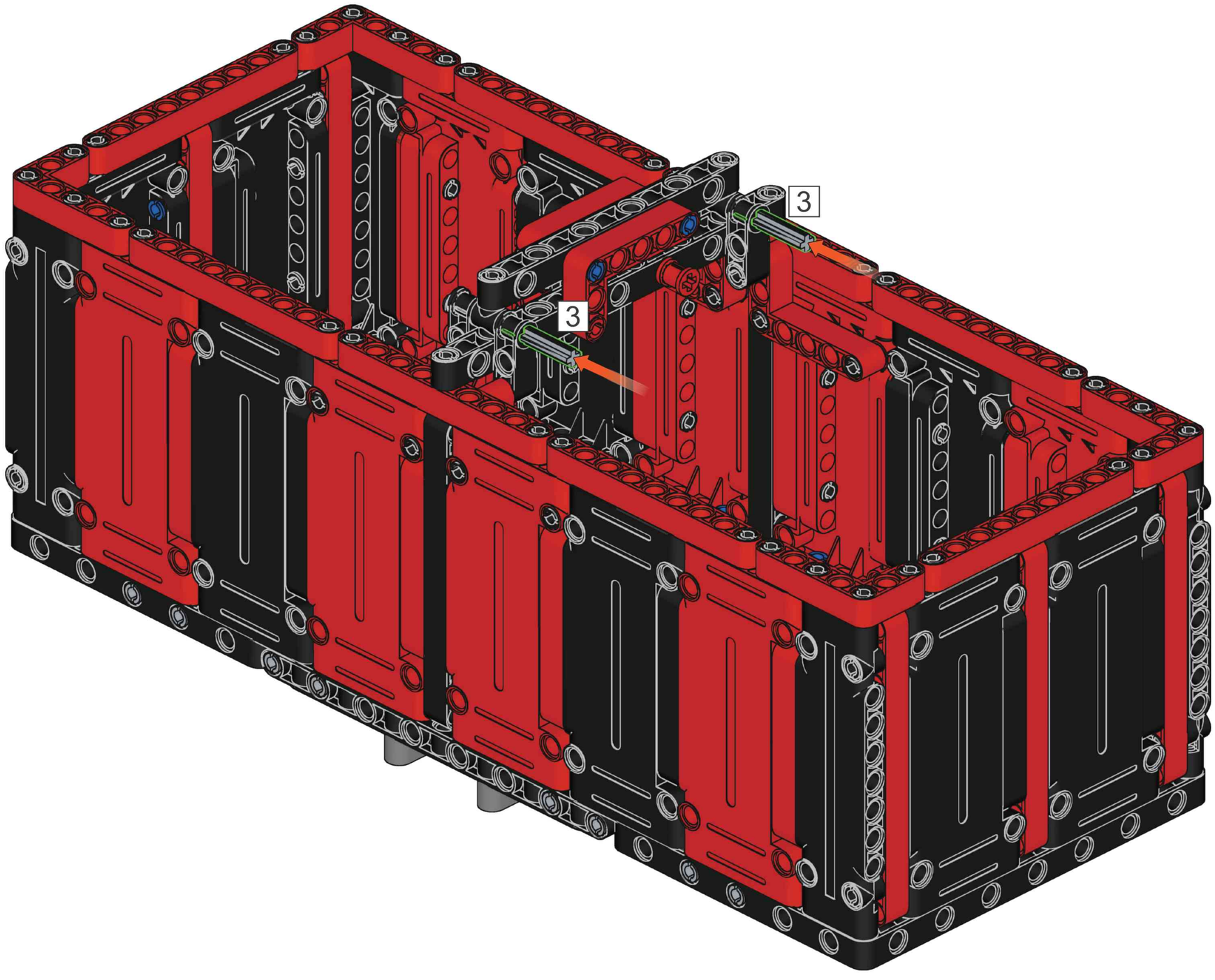

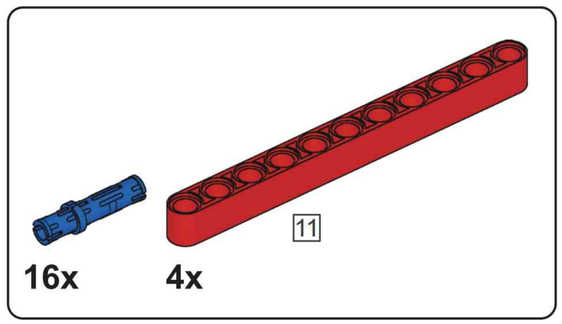

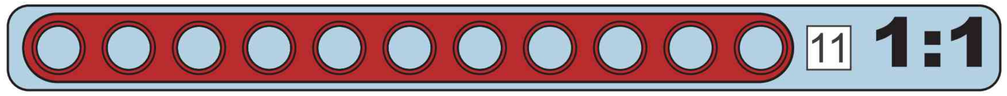

J97

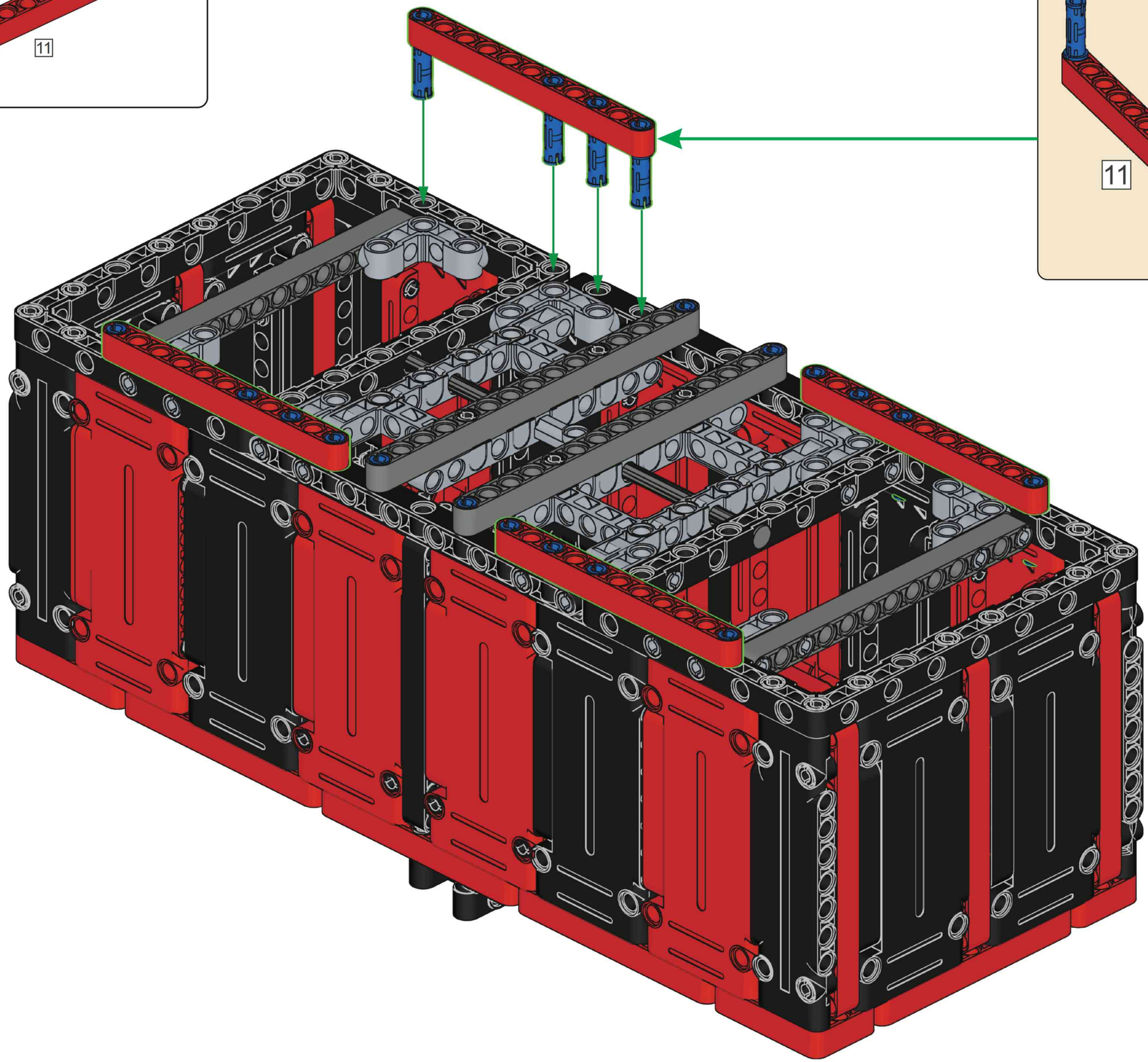

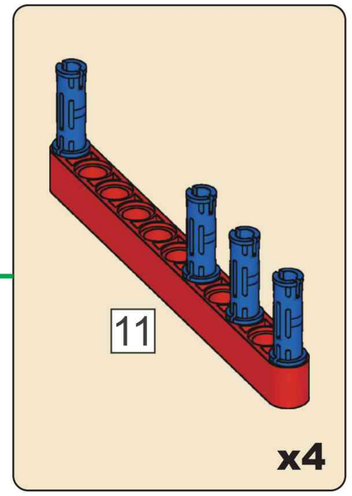

11

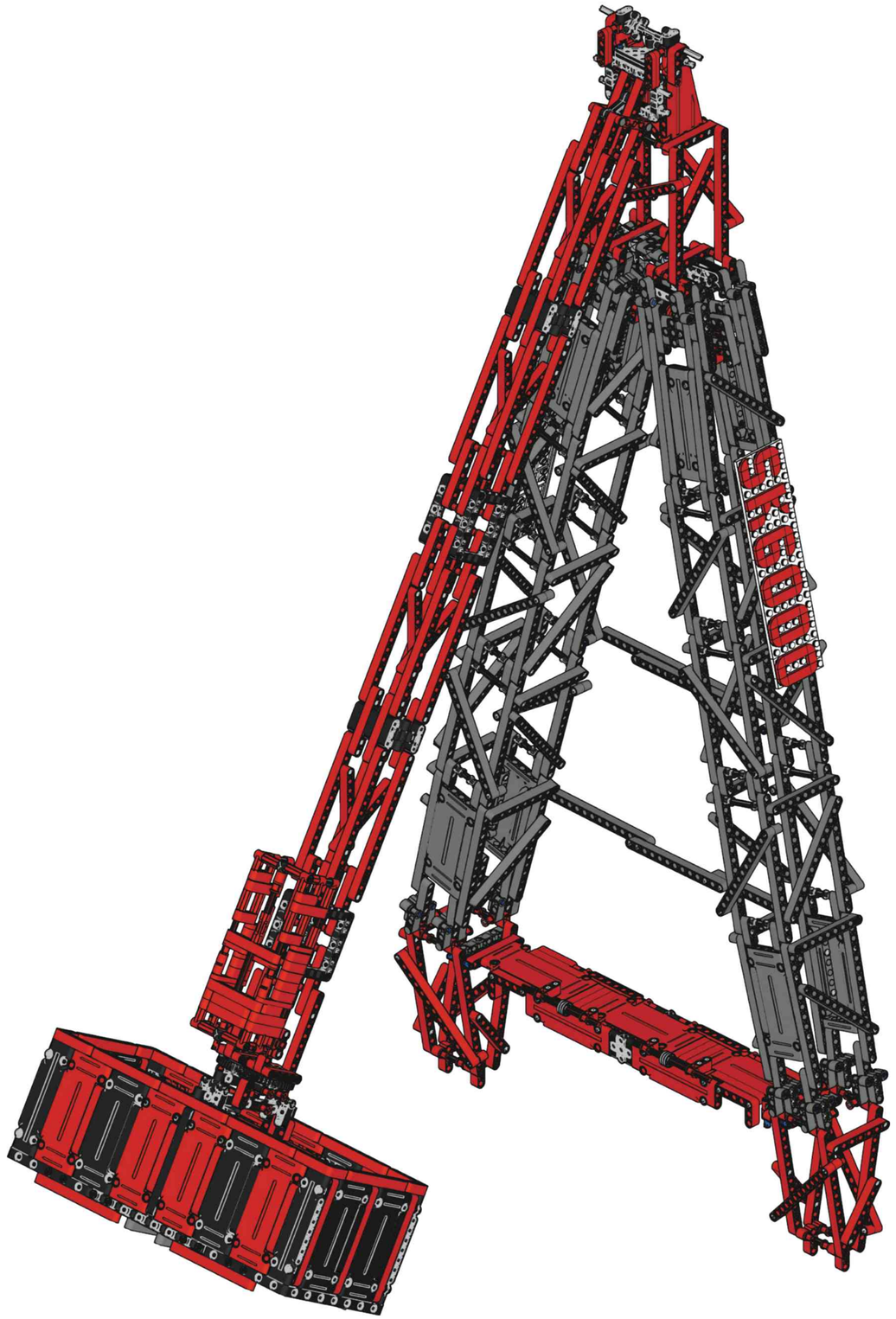

K

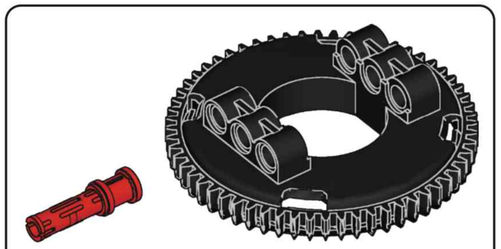

K1

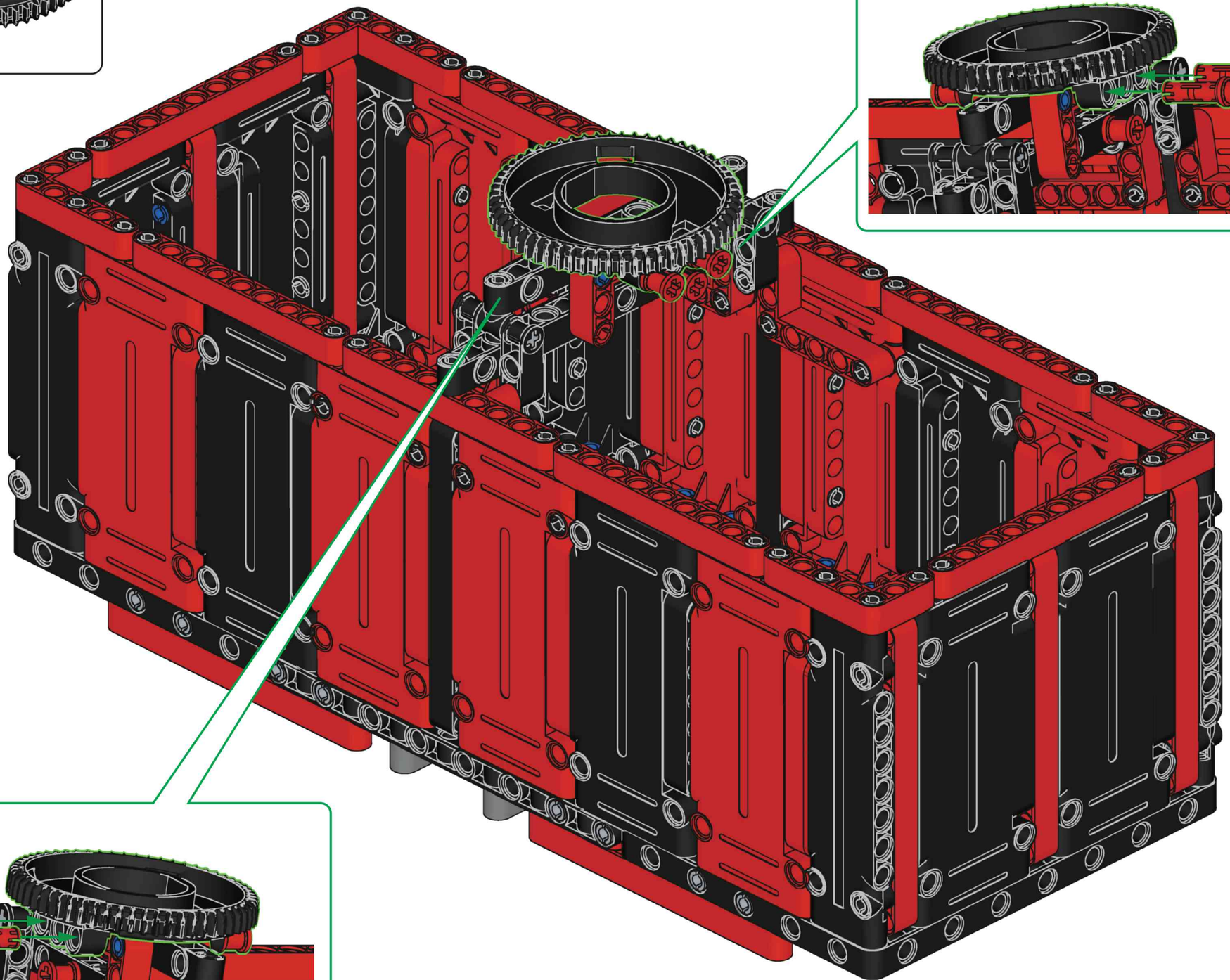

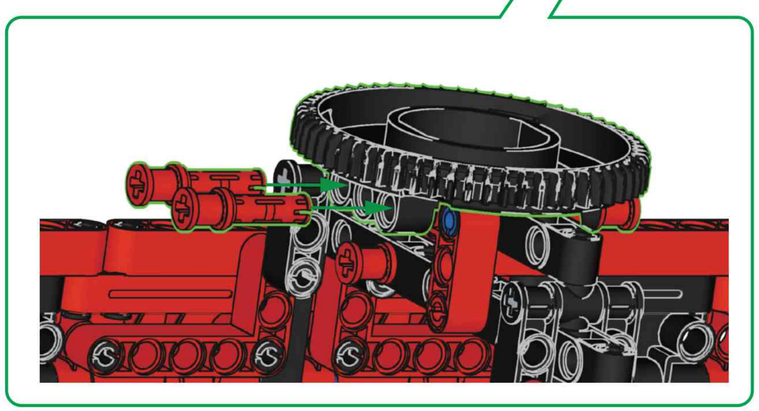

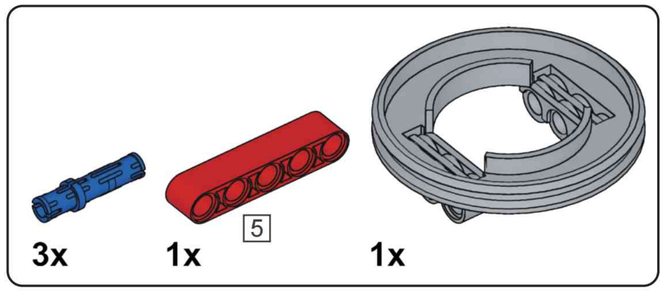

K2

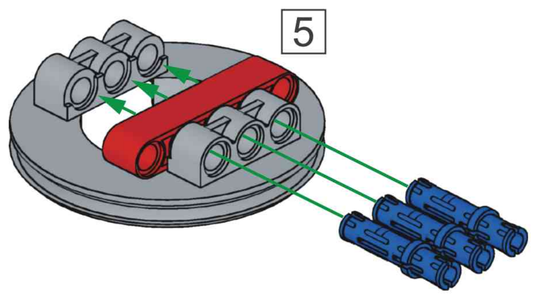

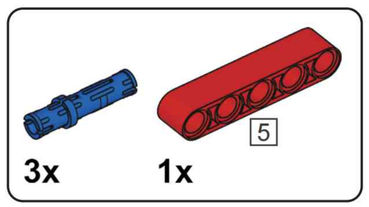

K3

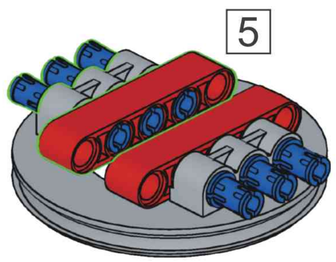

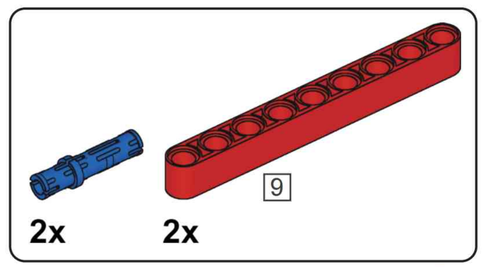

K4

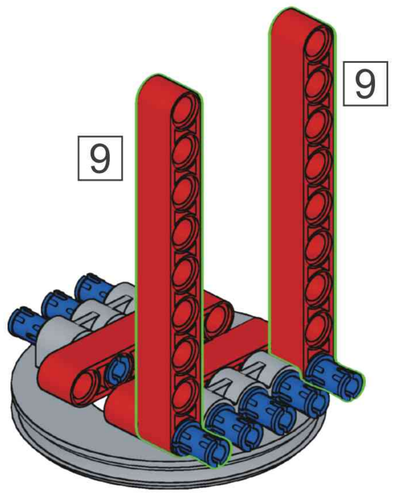

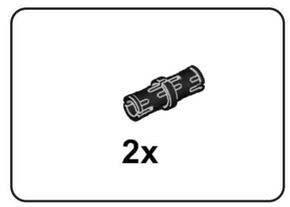

K5

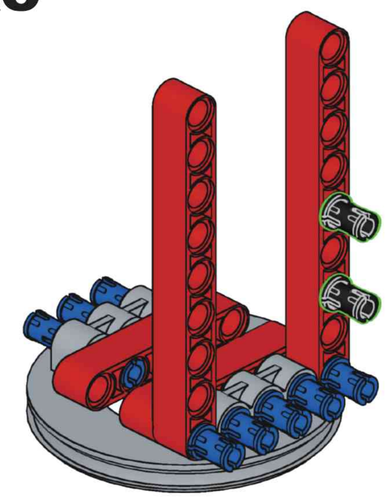

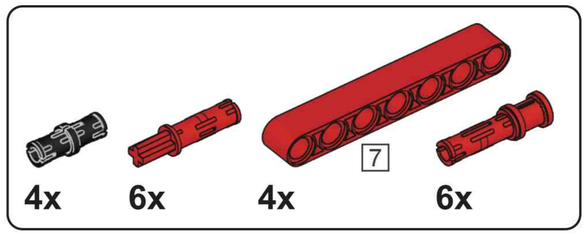

K6

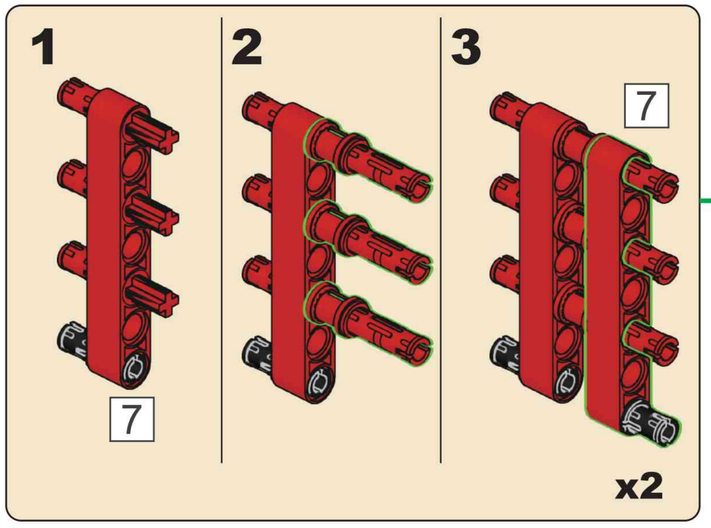

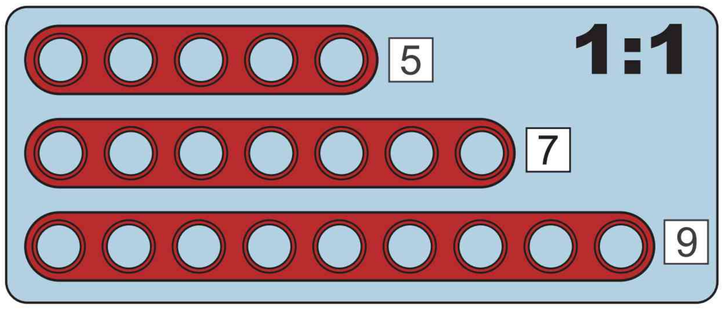

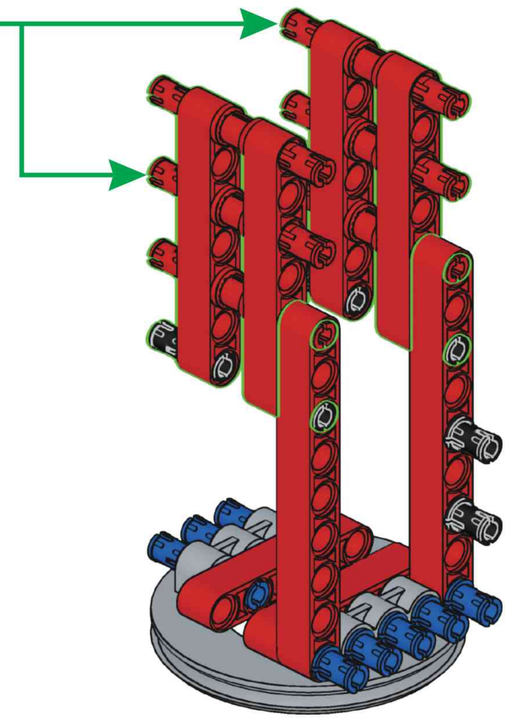

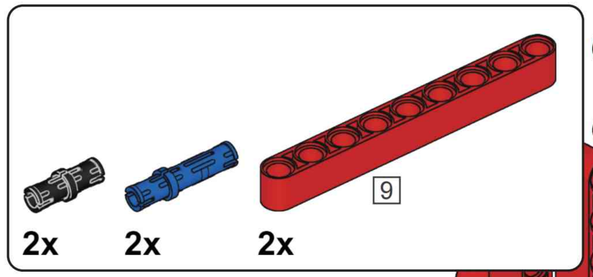

K7

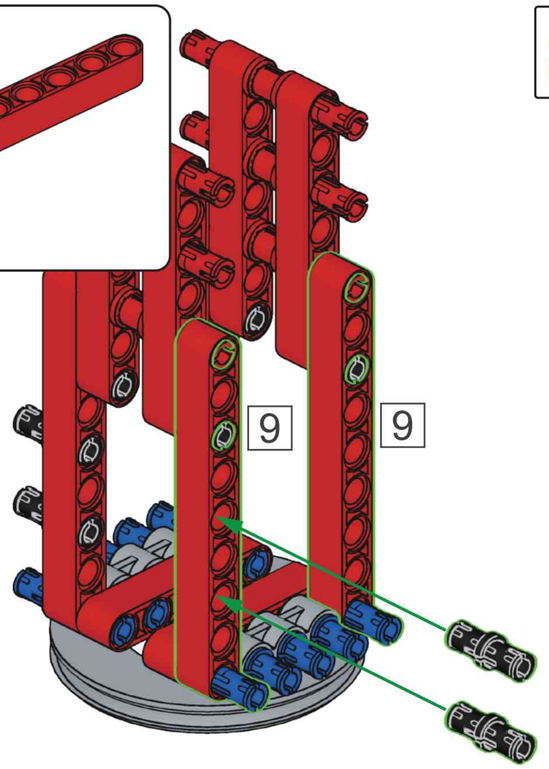

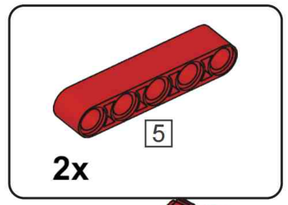

K8

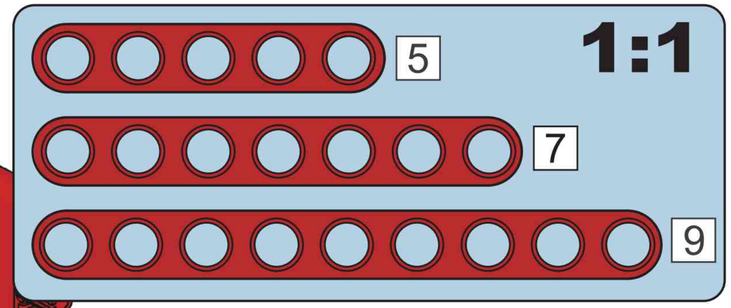

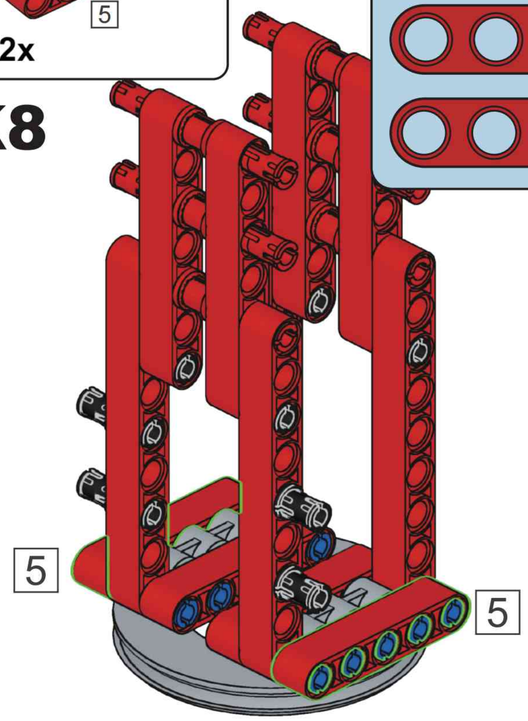

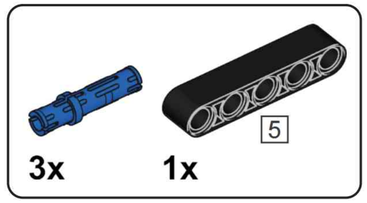

K9

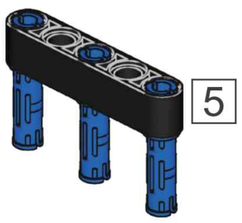

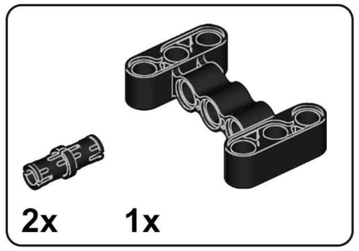

K10

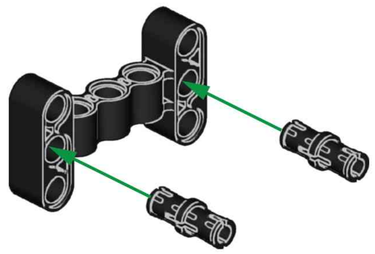

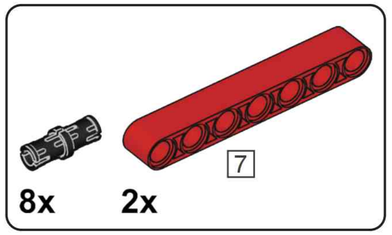

K11

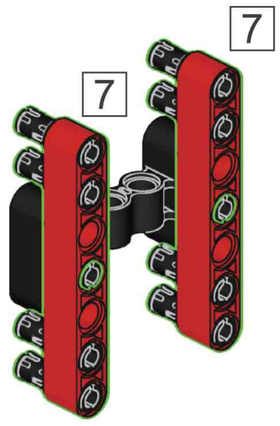

4x

K12

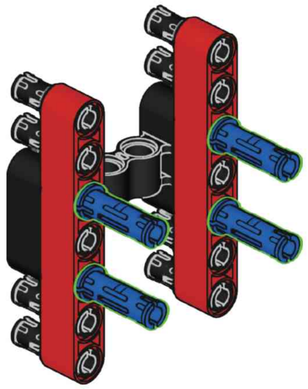

1x

K13

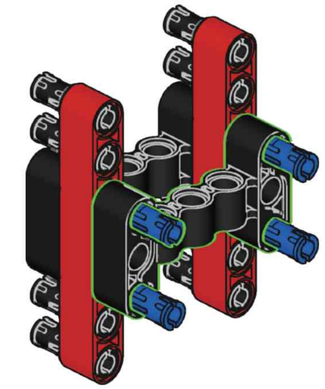

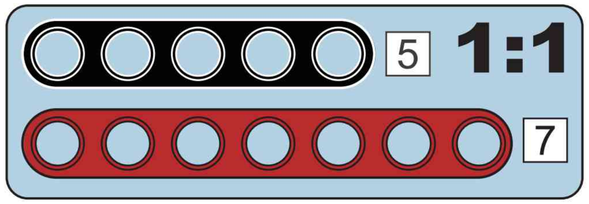

8x 2x

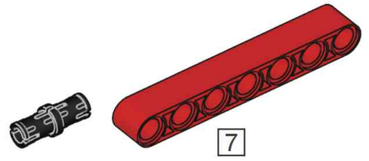

K14

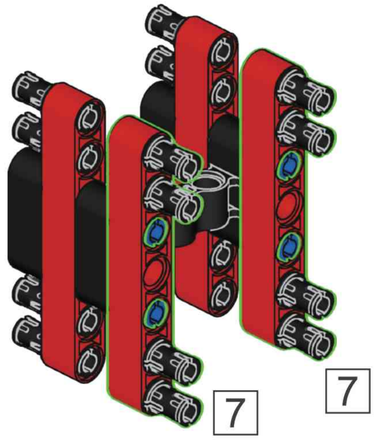

2x 1x

K15

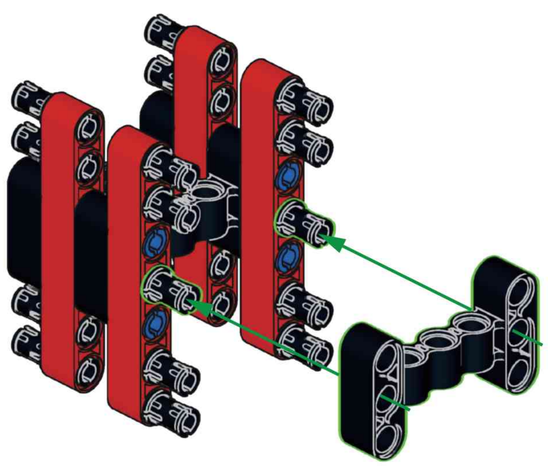

K16

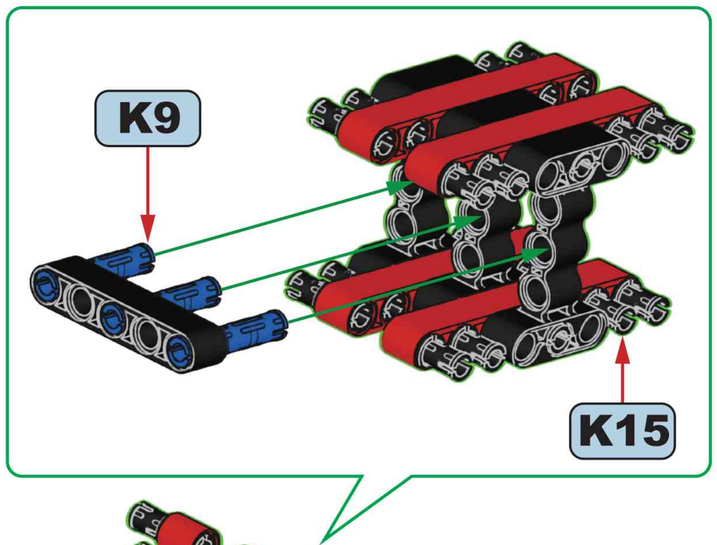

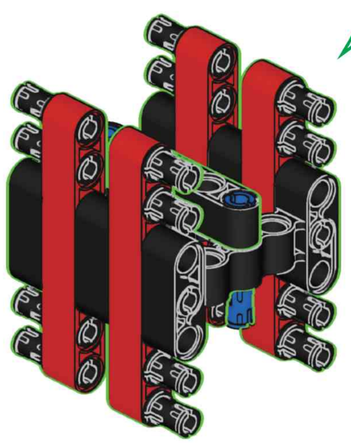

1x

K17

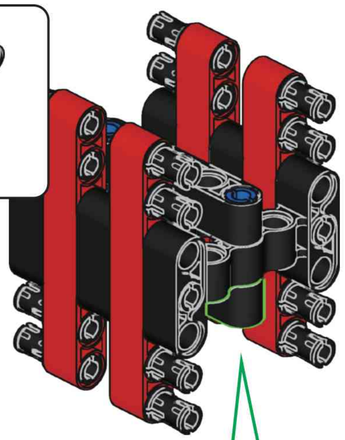

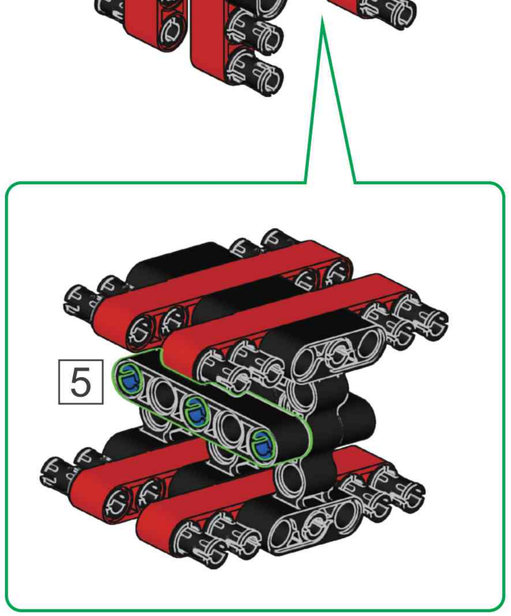

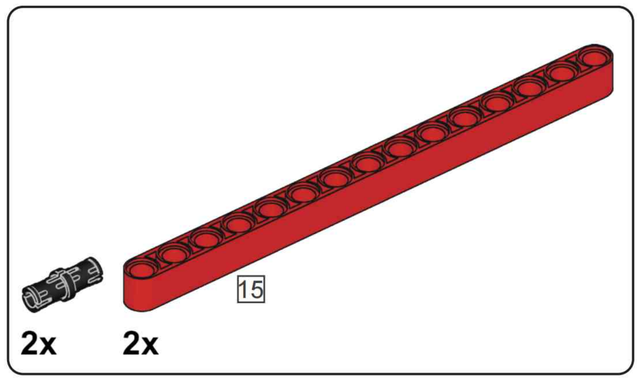

K18

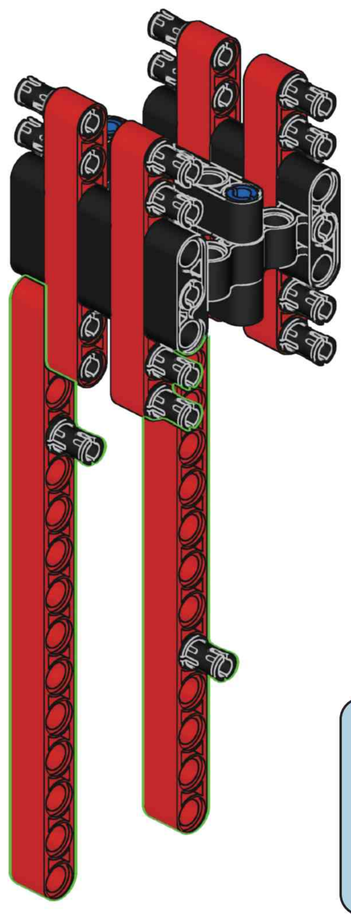

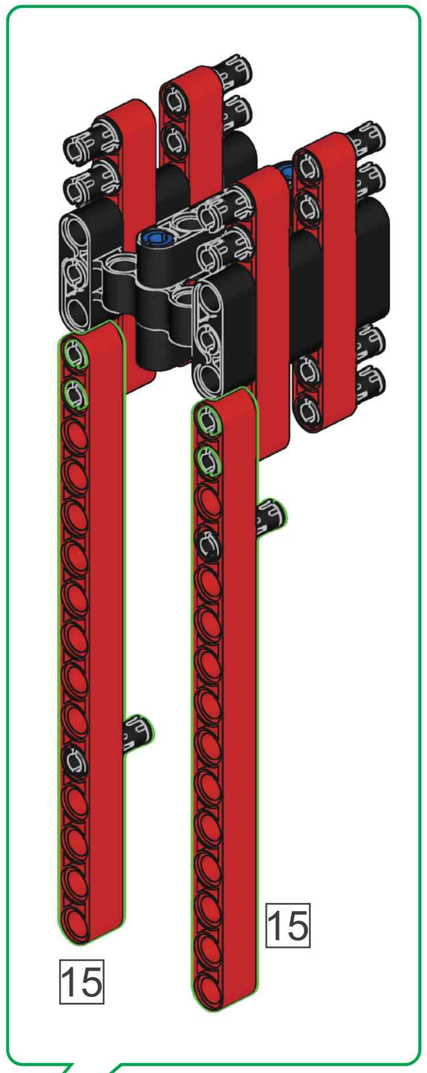

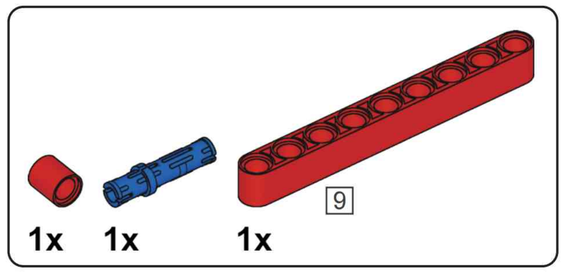

K19

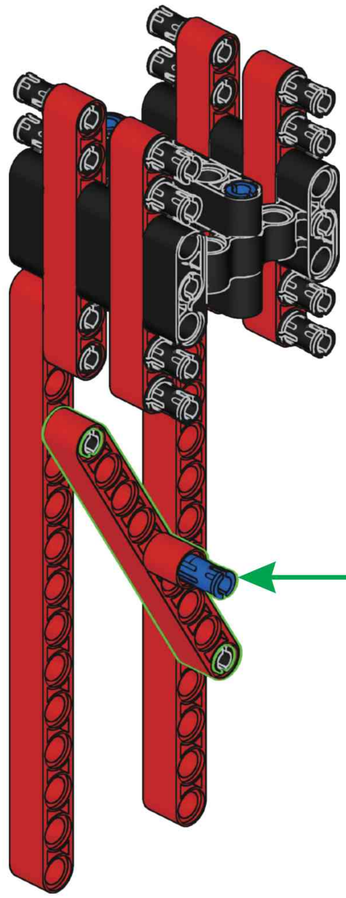

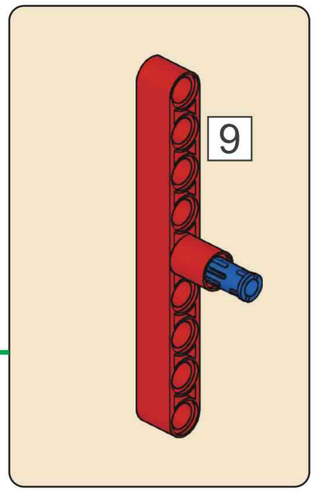

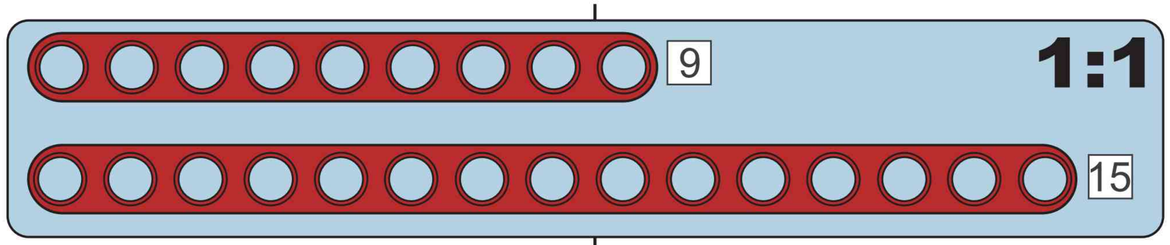

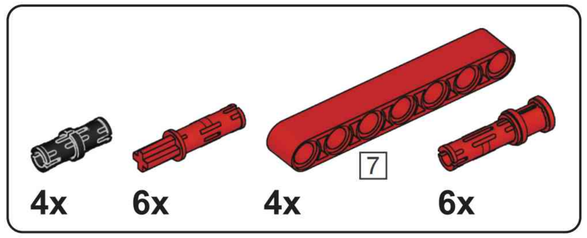

K20

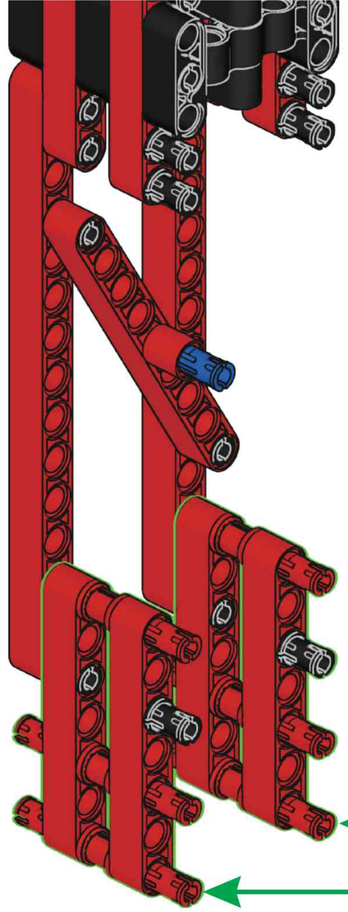

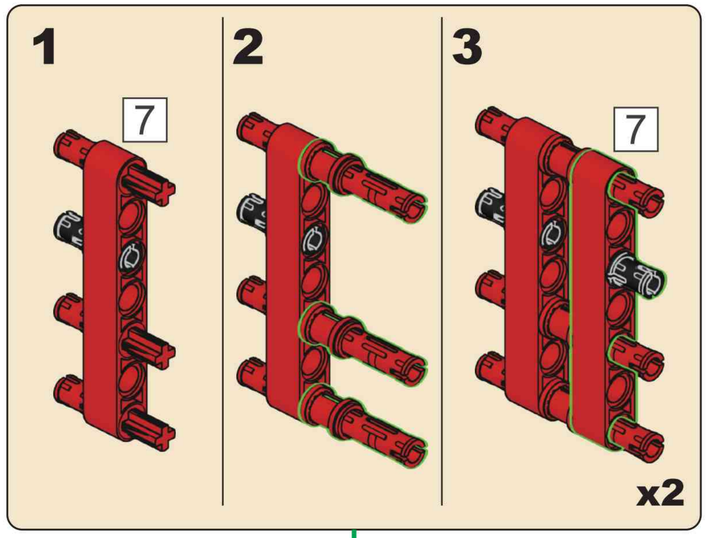

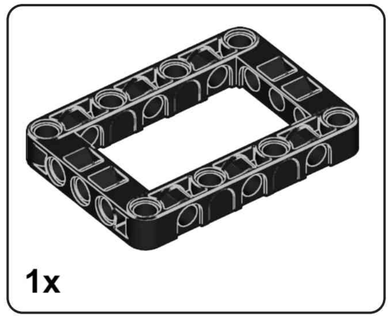

K21

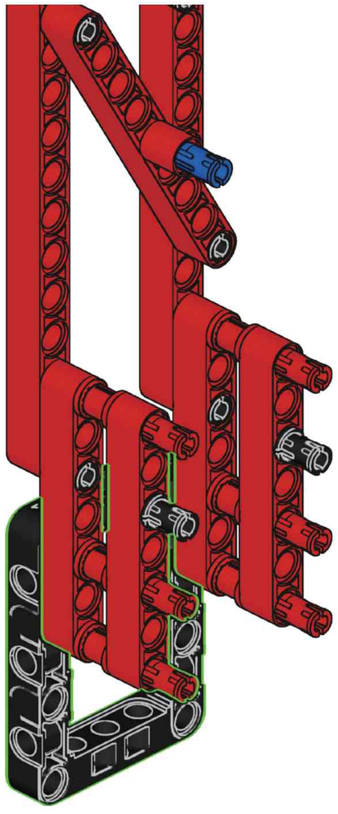

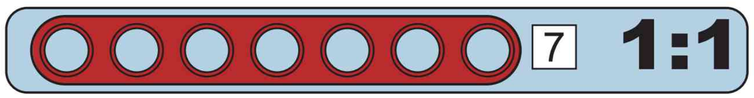

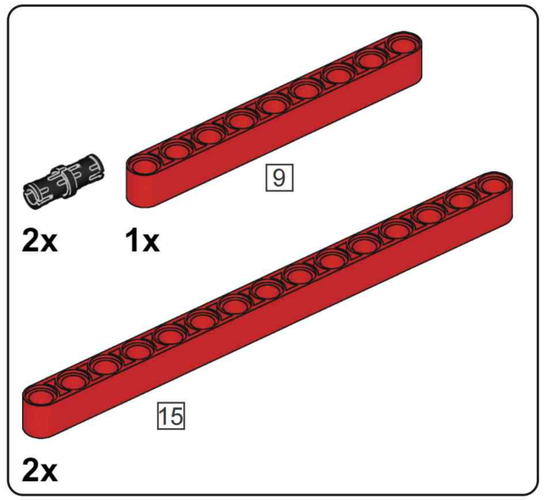

K22

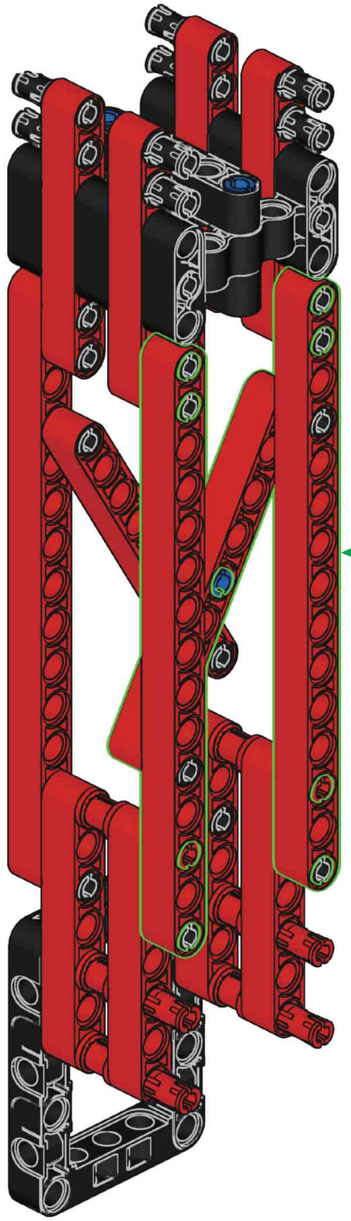

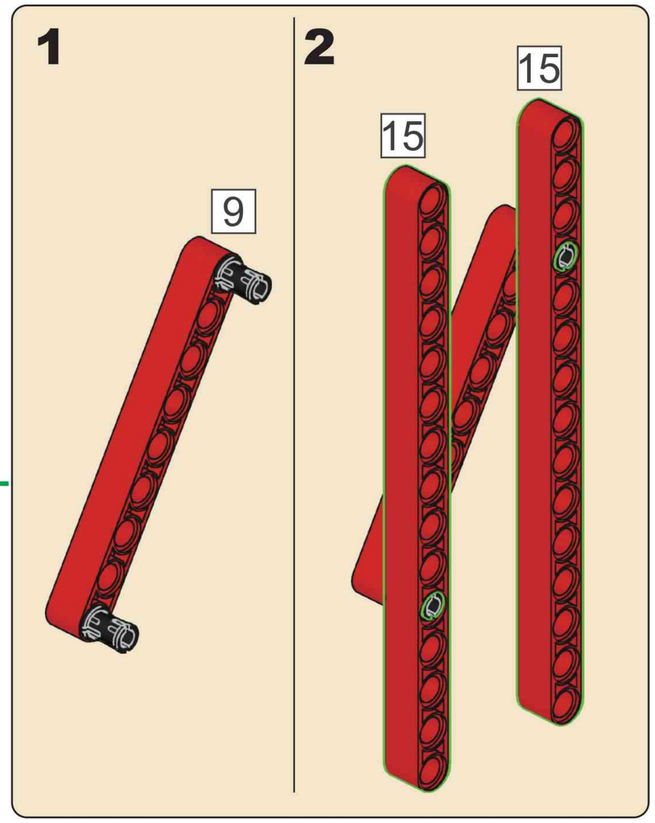

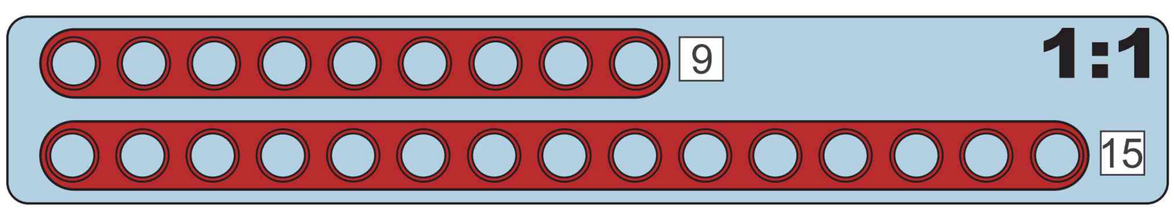

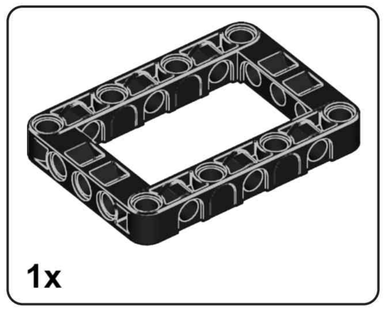

K23



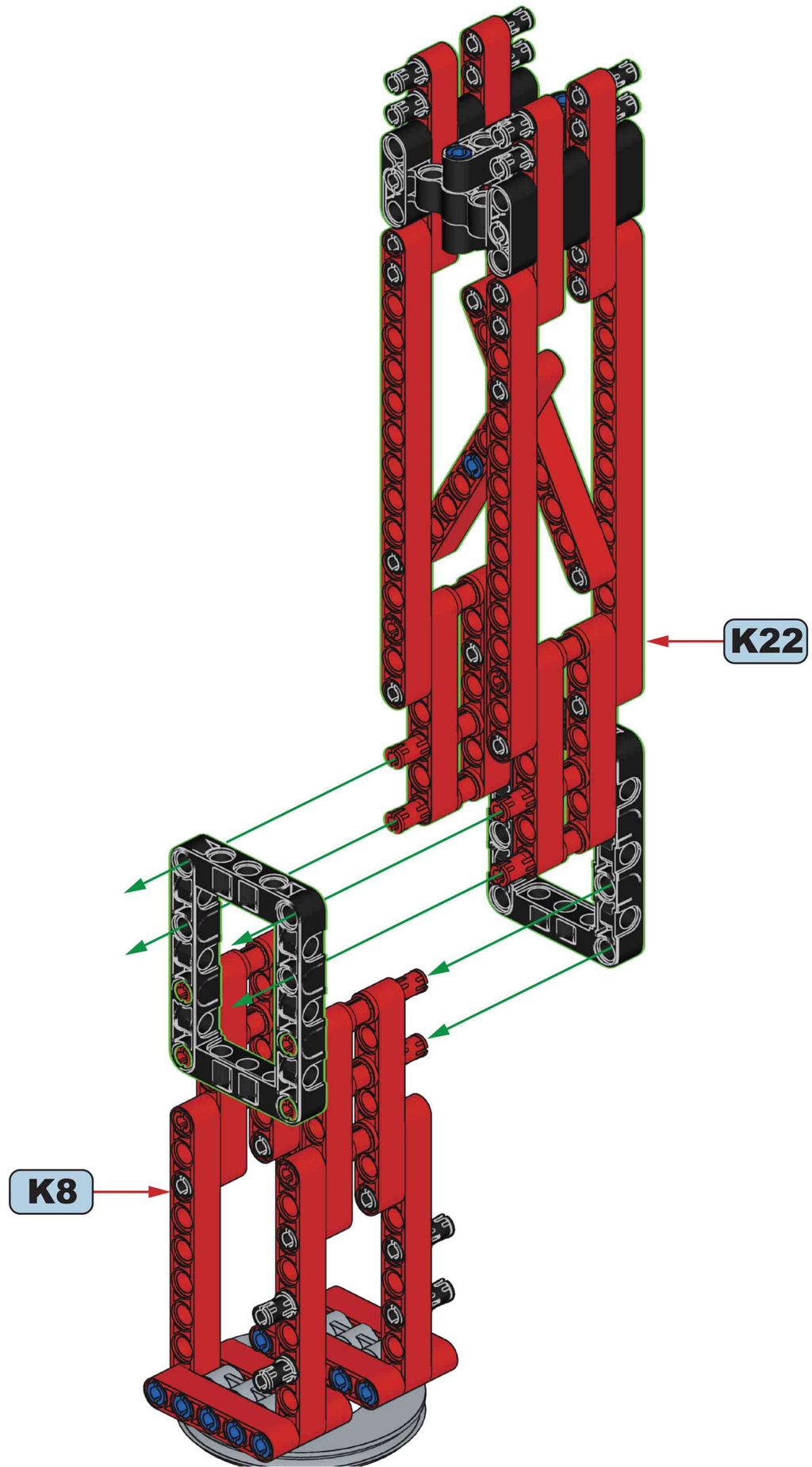

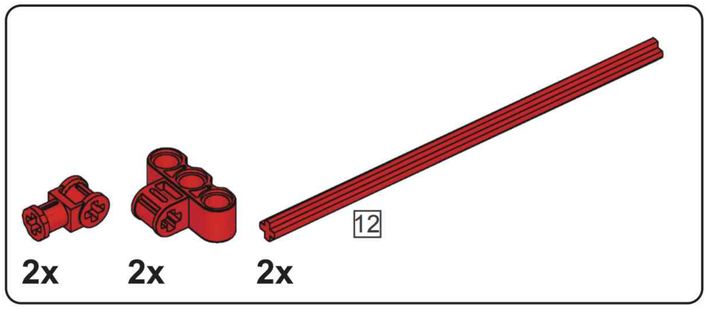

K24

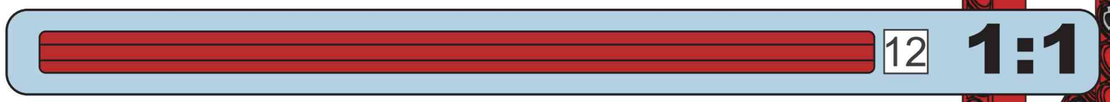

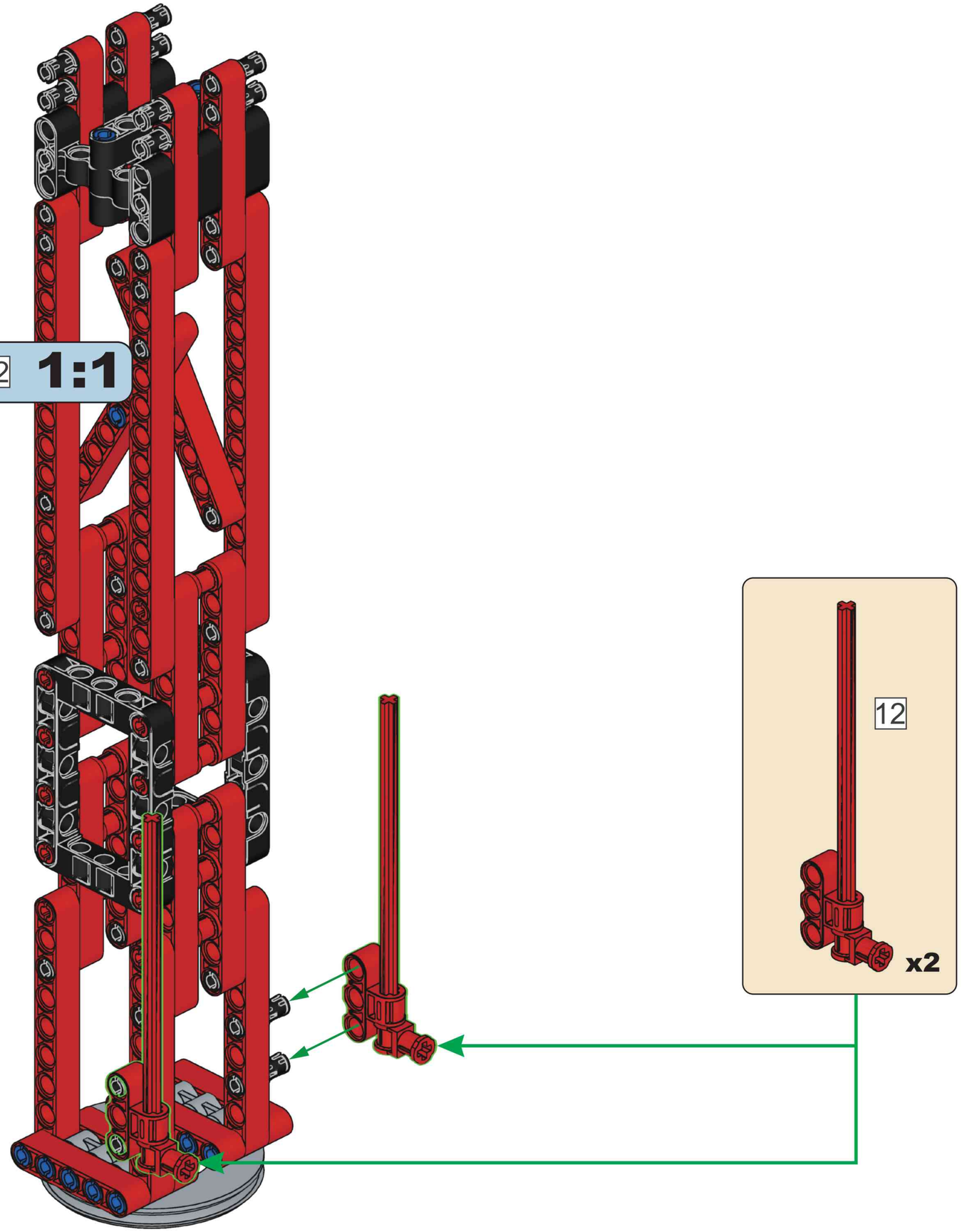

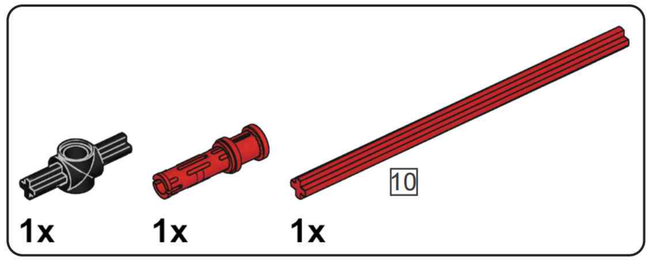

K25

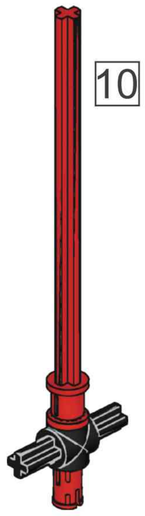



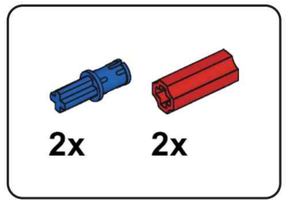

K26

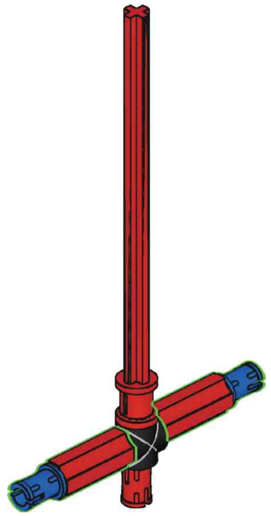

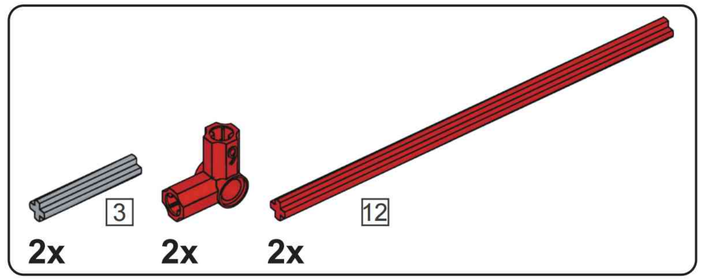

K27

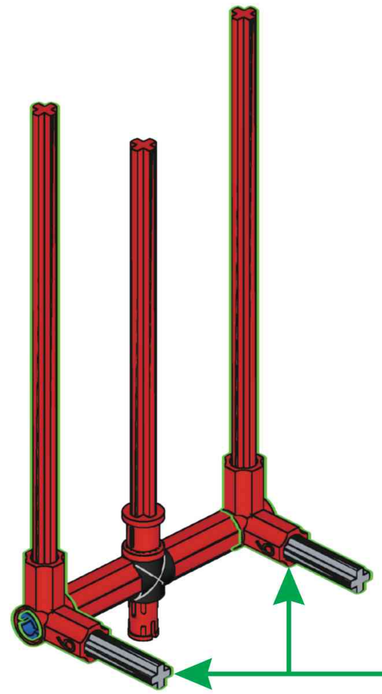

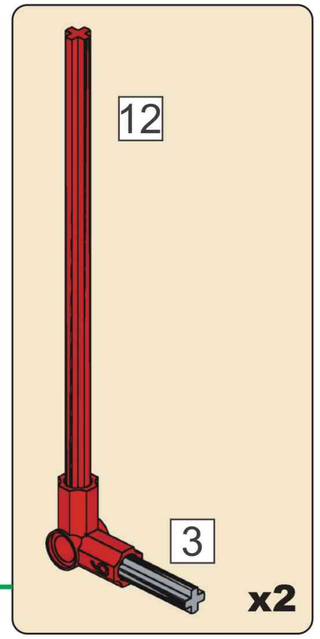

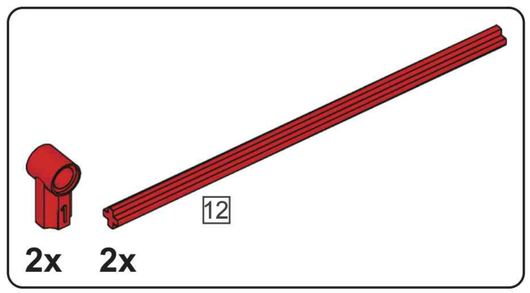

K28

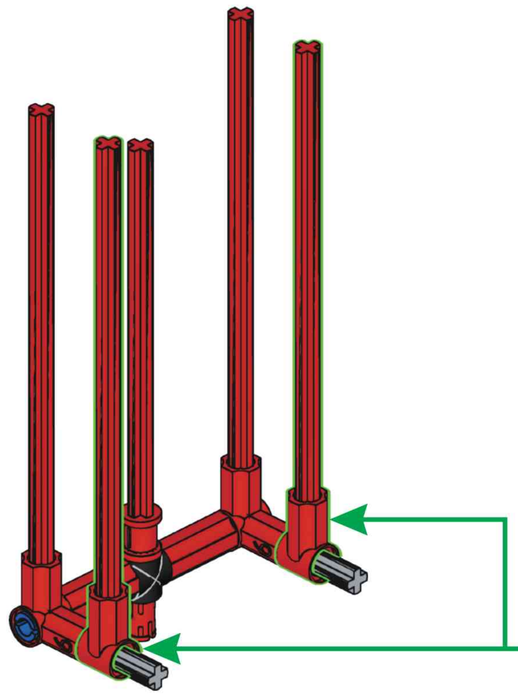

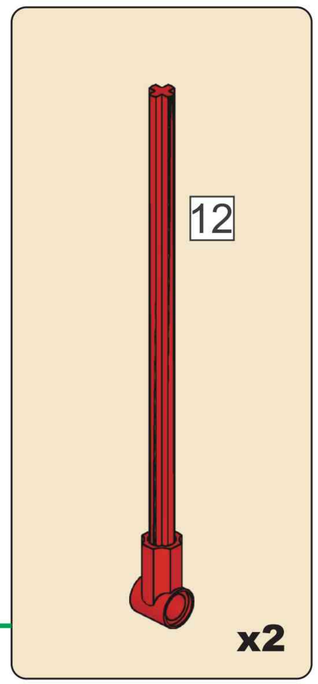

K29

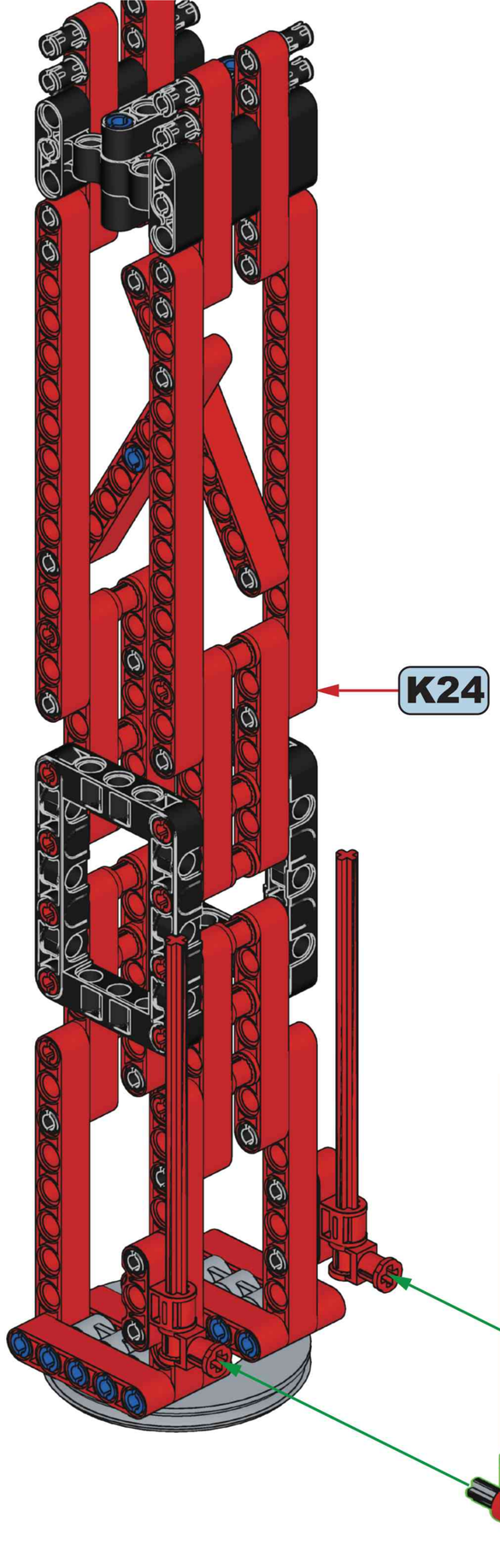

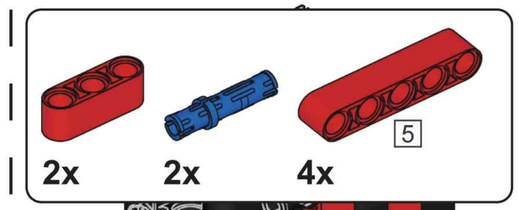

K30

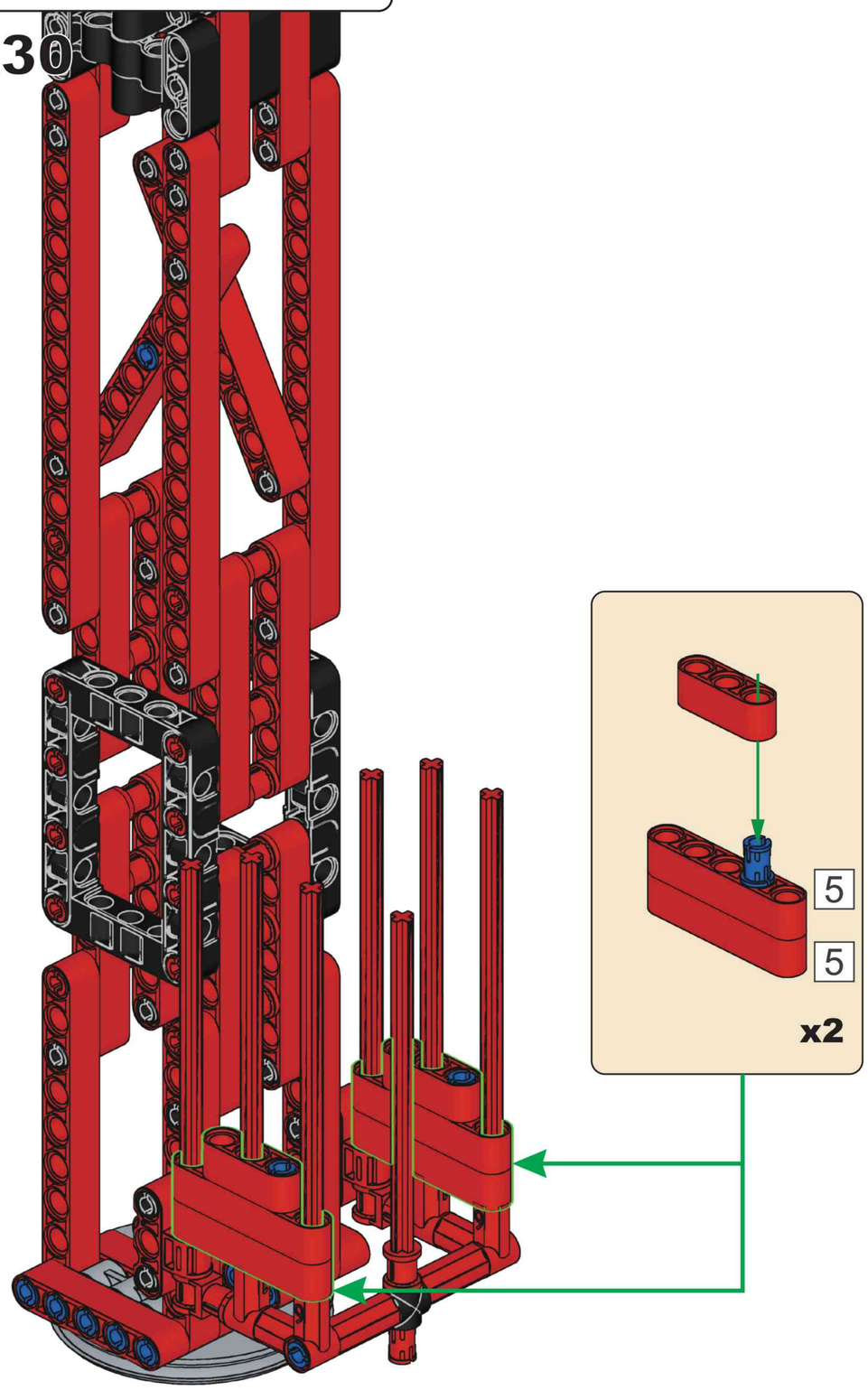

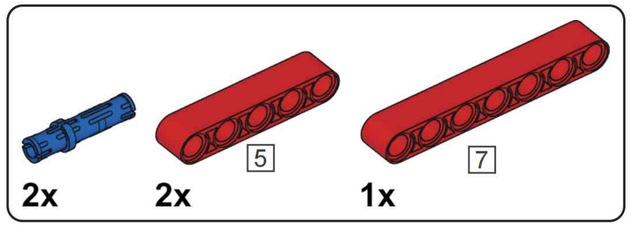

K31

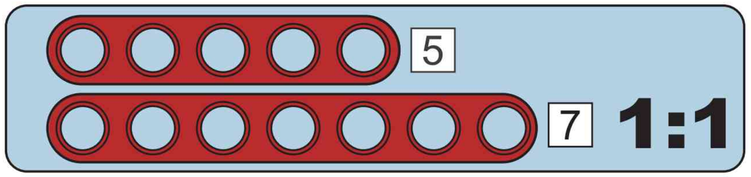

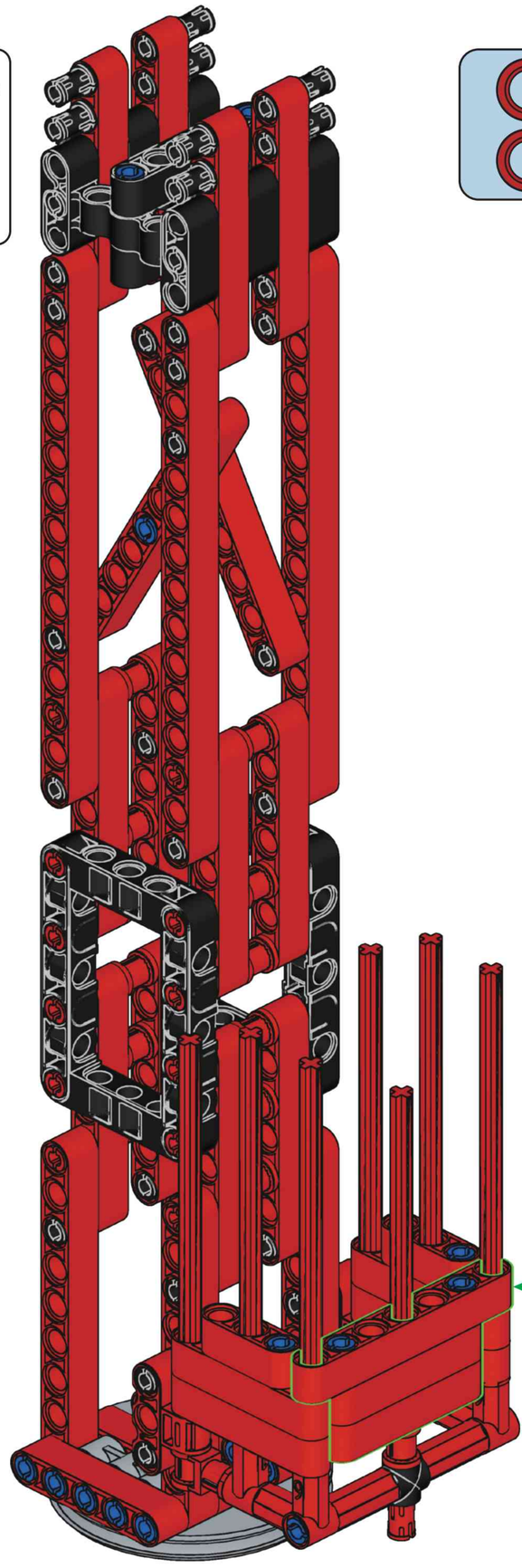

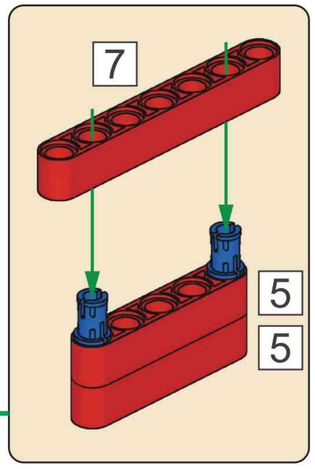

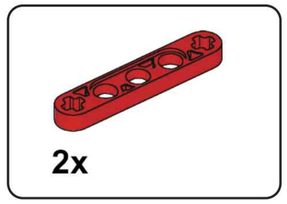

K32

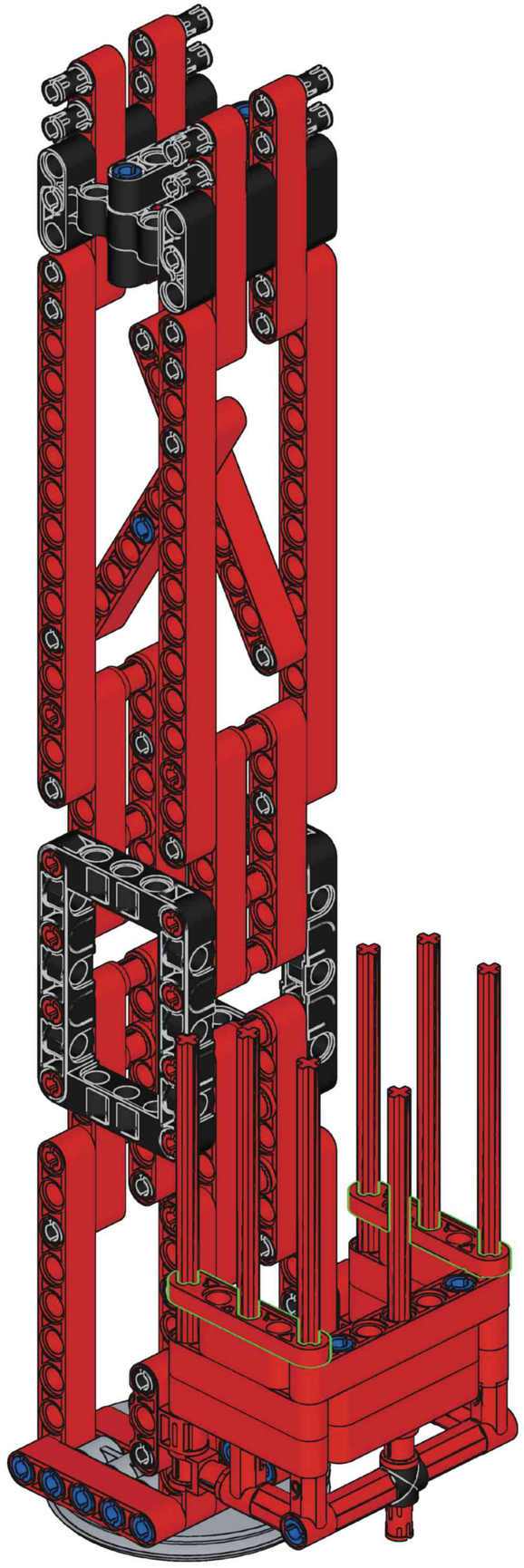

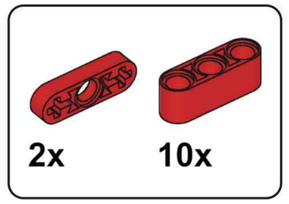

K33

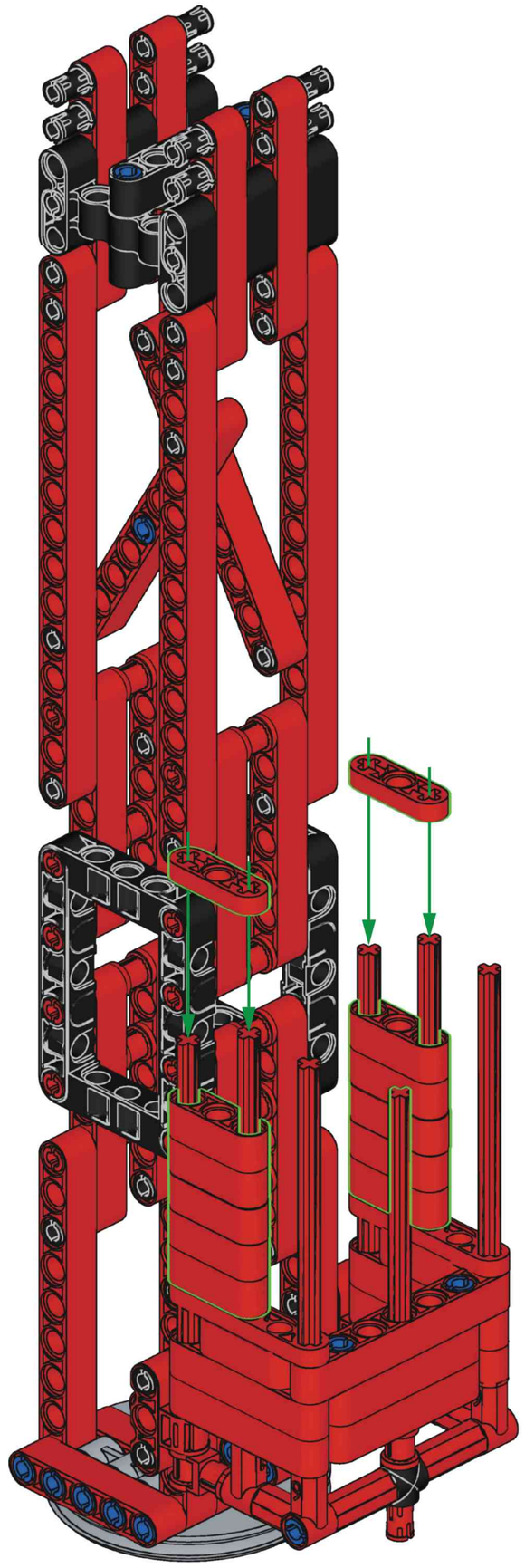

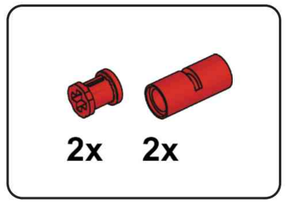

K34

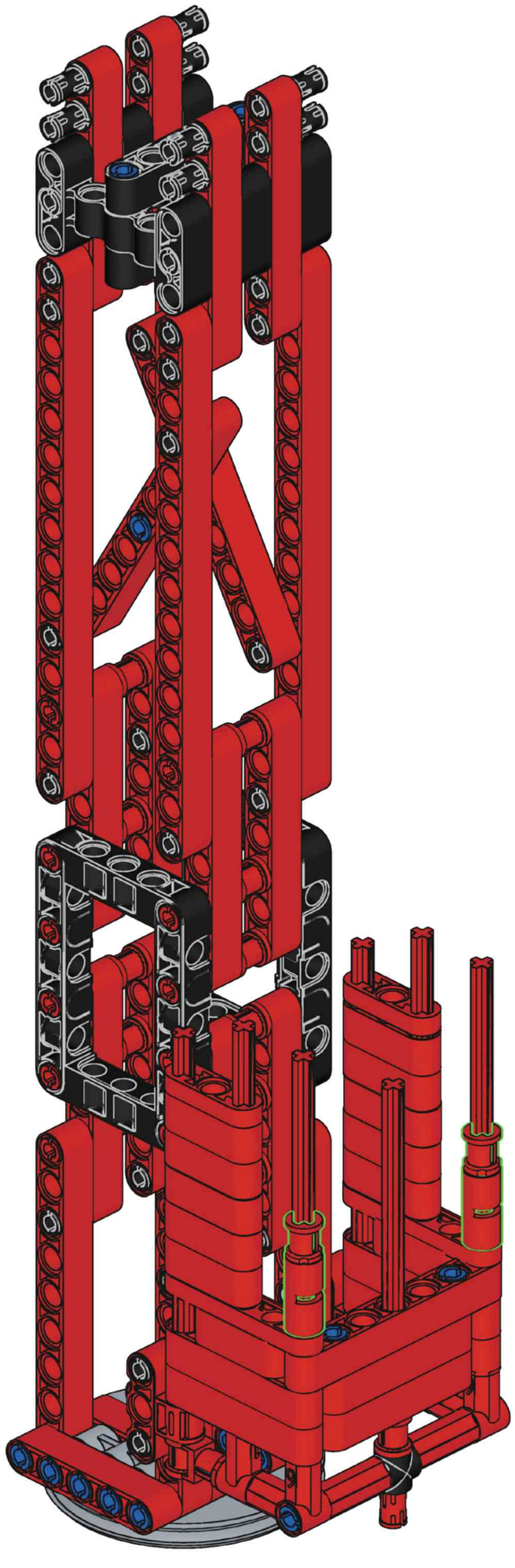

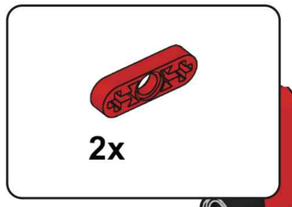

K35

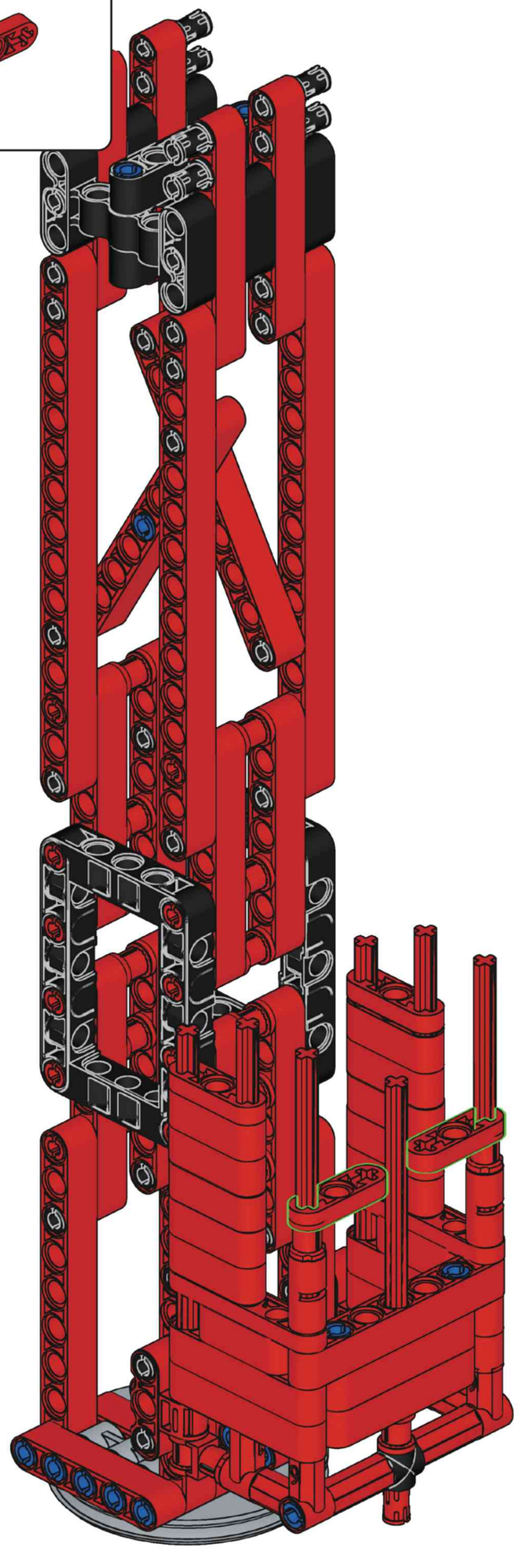

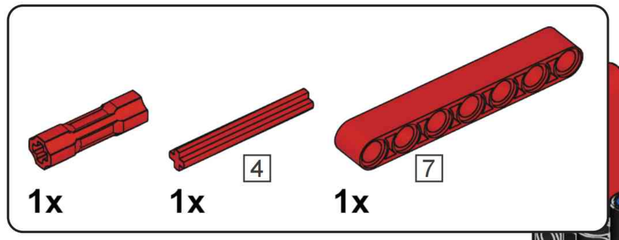

K36

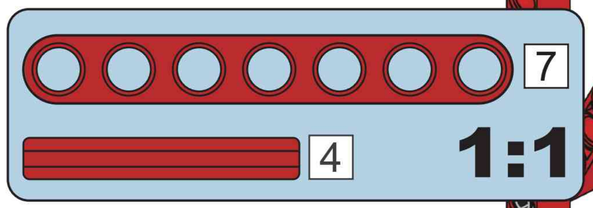

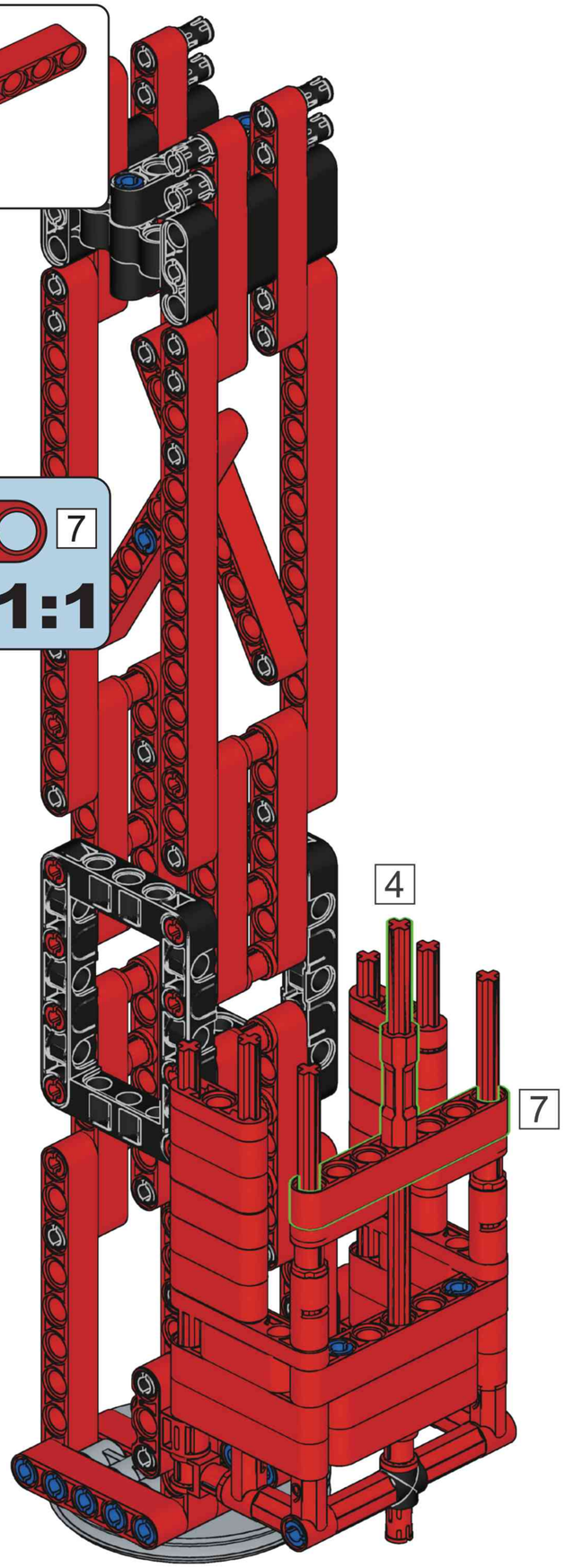

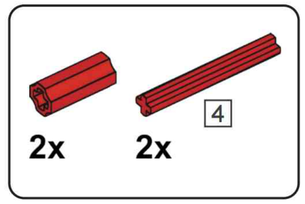

K37

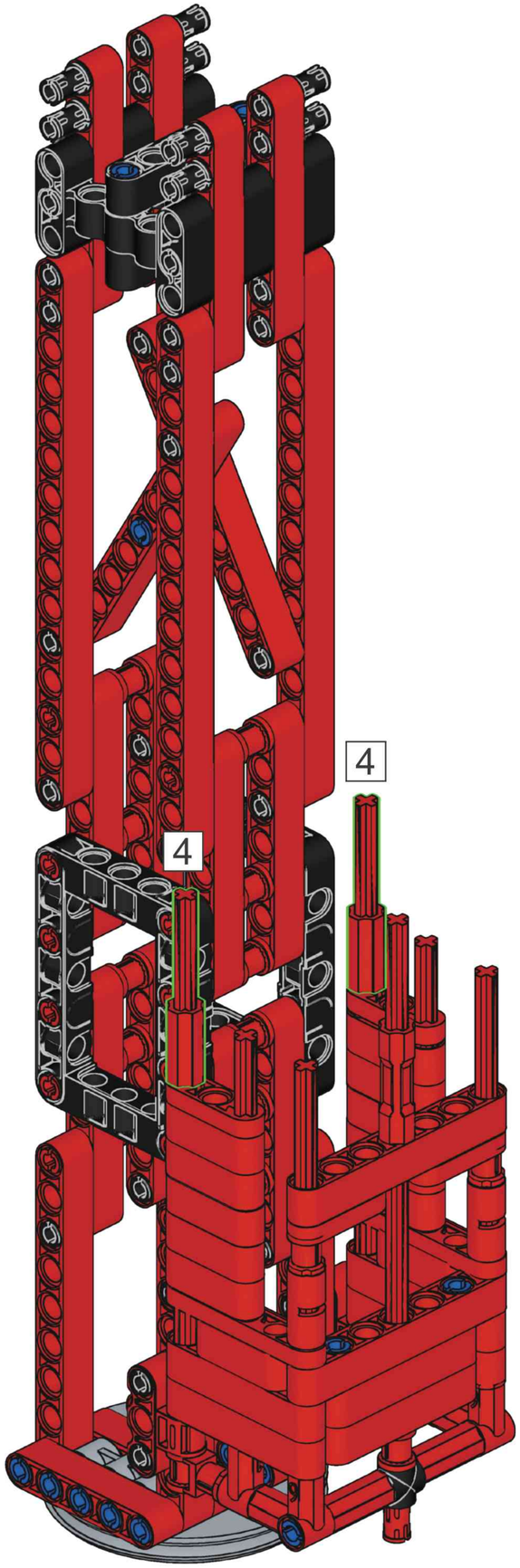

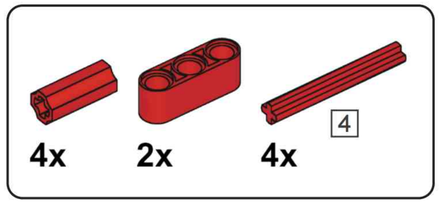

K38

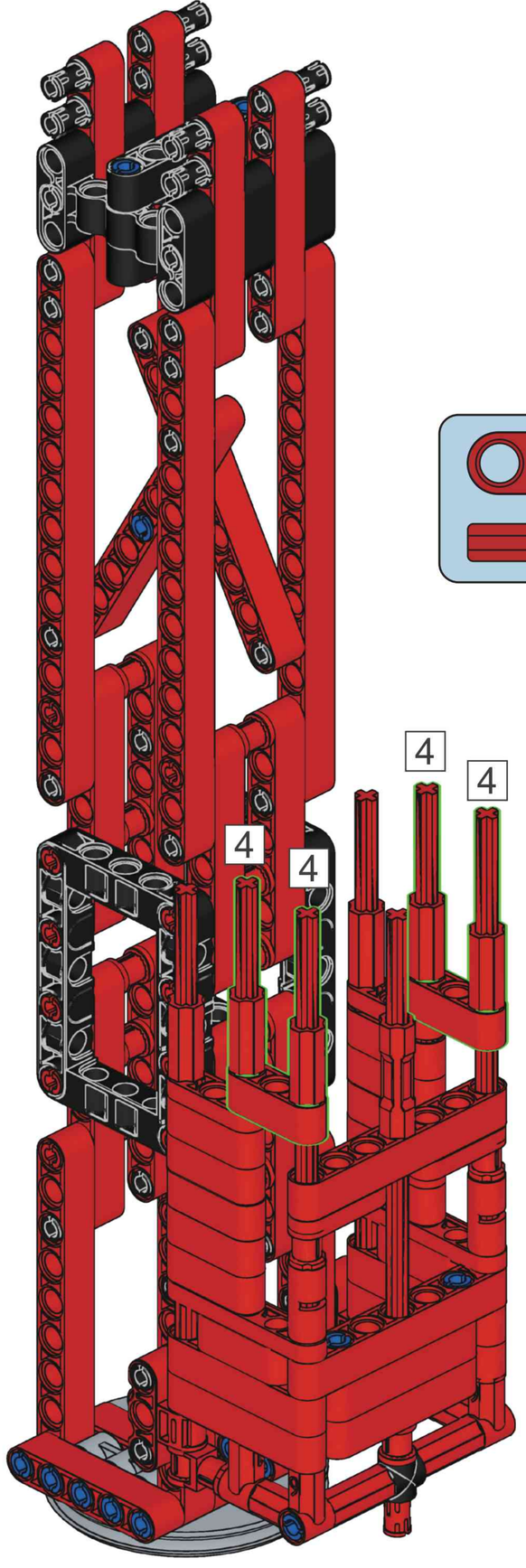

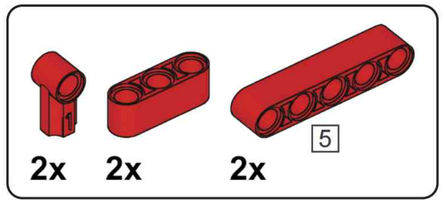

K39

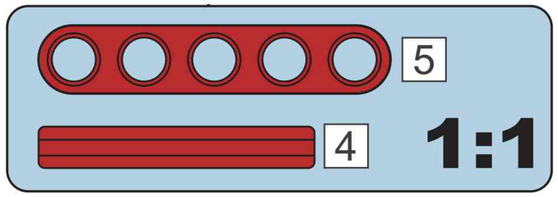

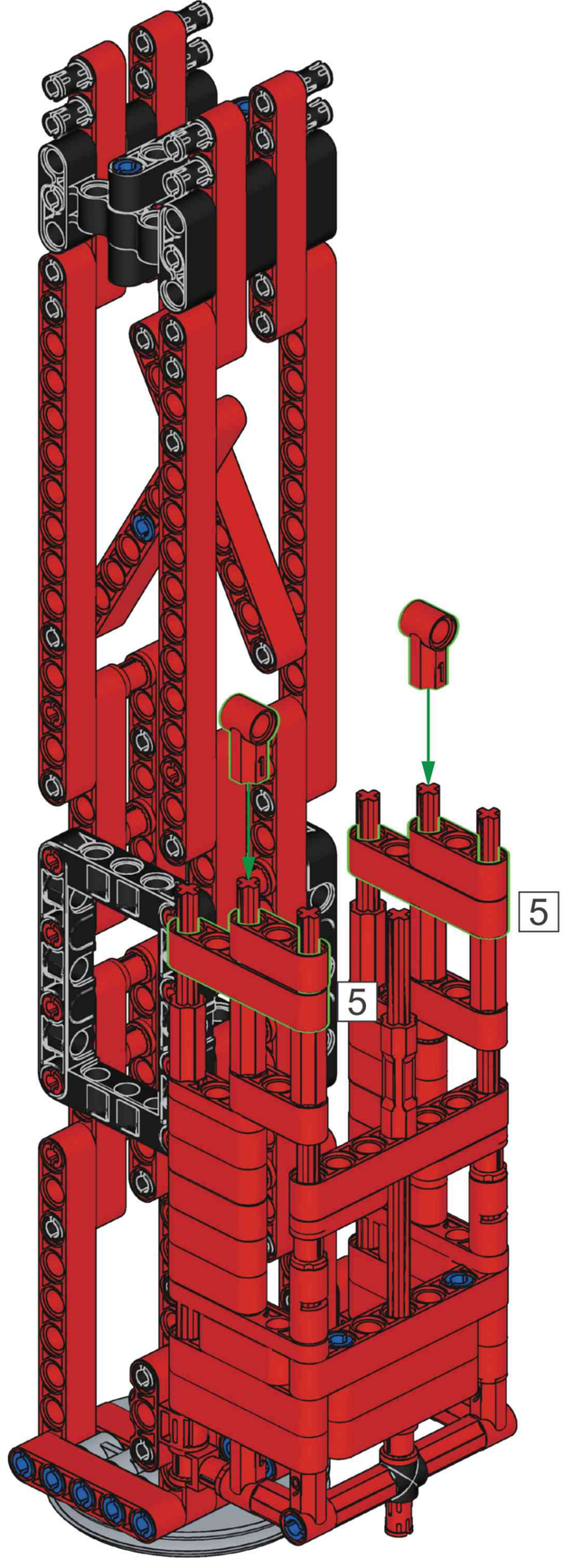

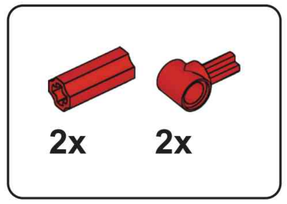

K40

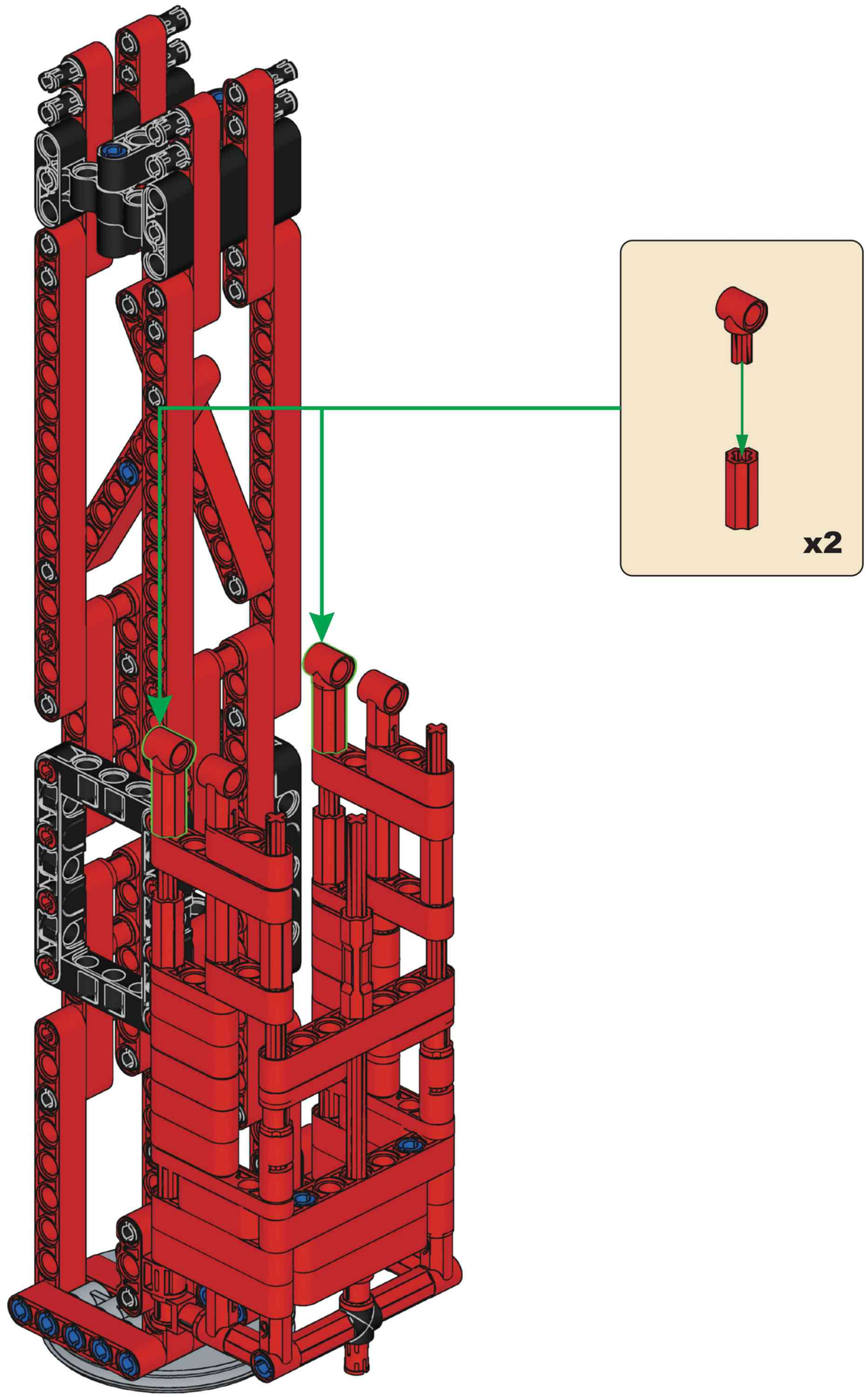

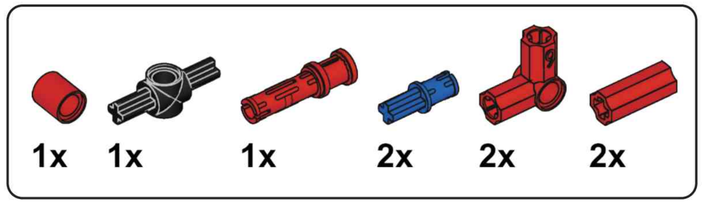

K41

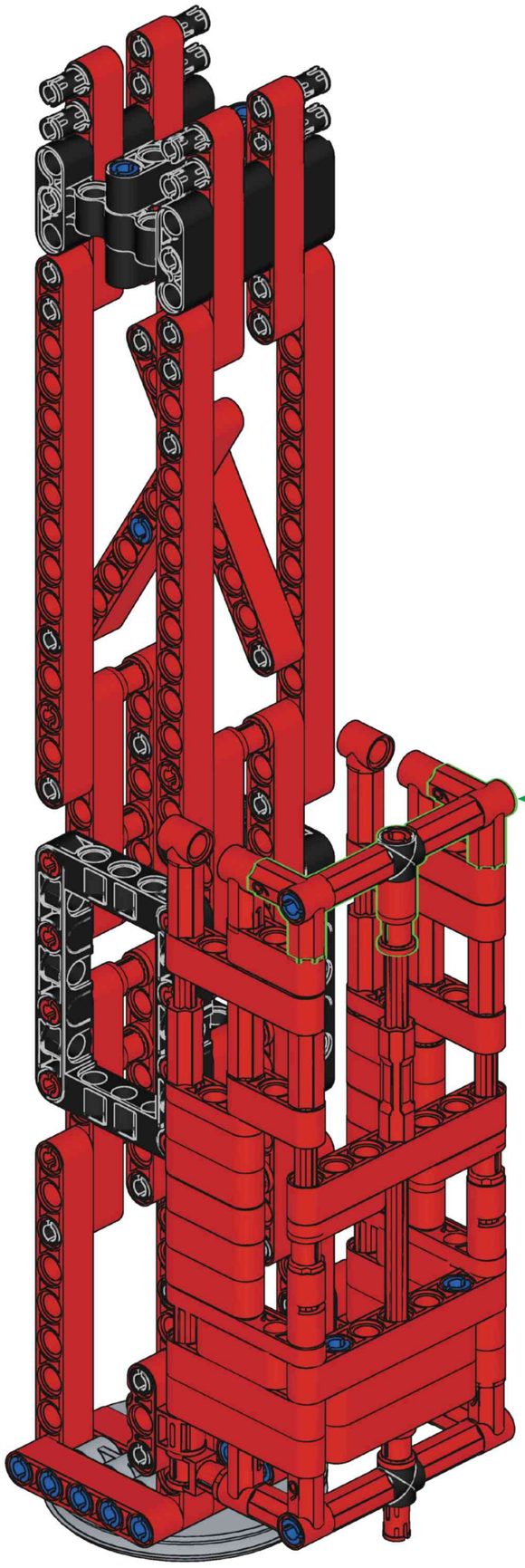

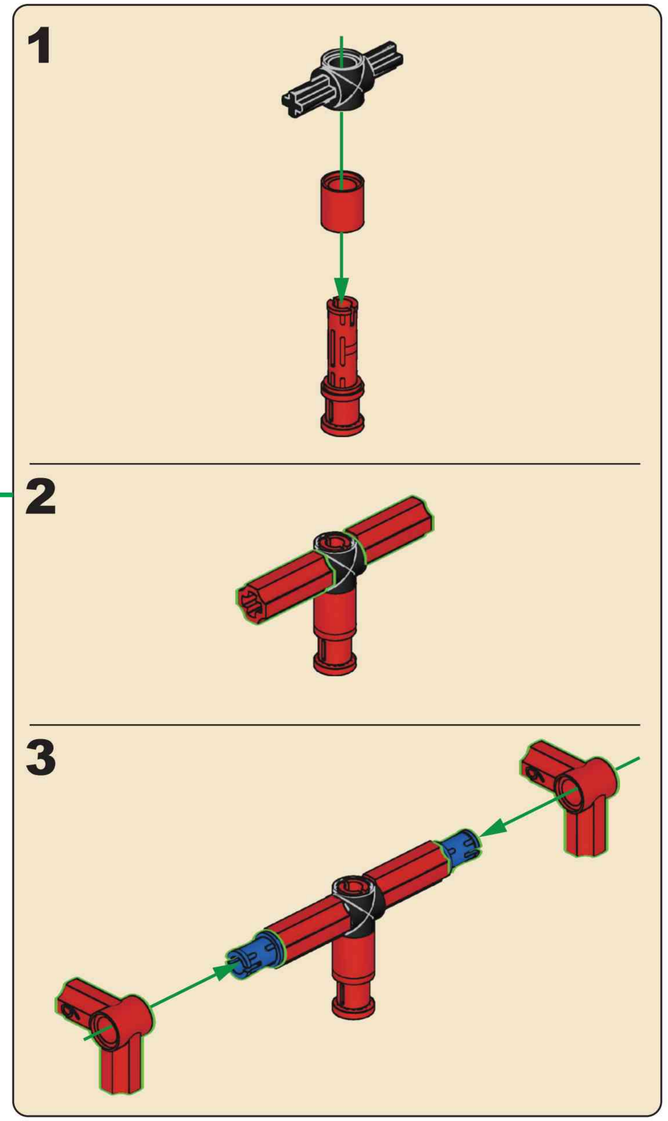

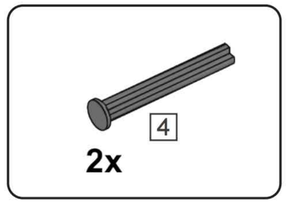

K42

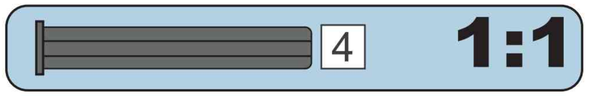

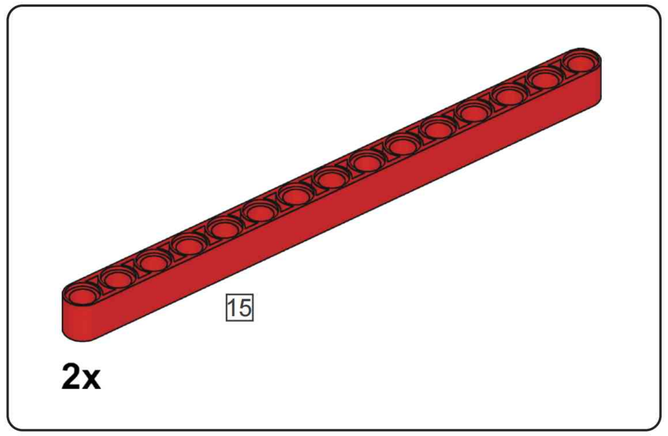

K43

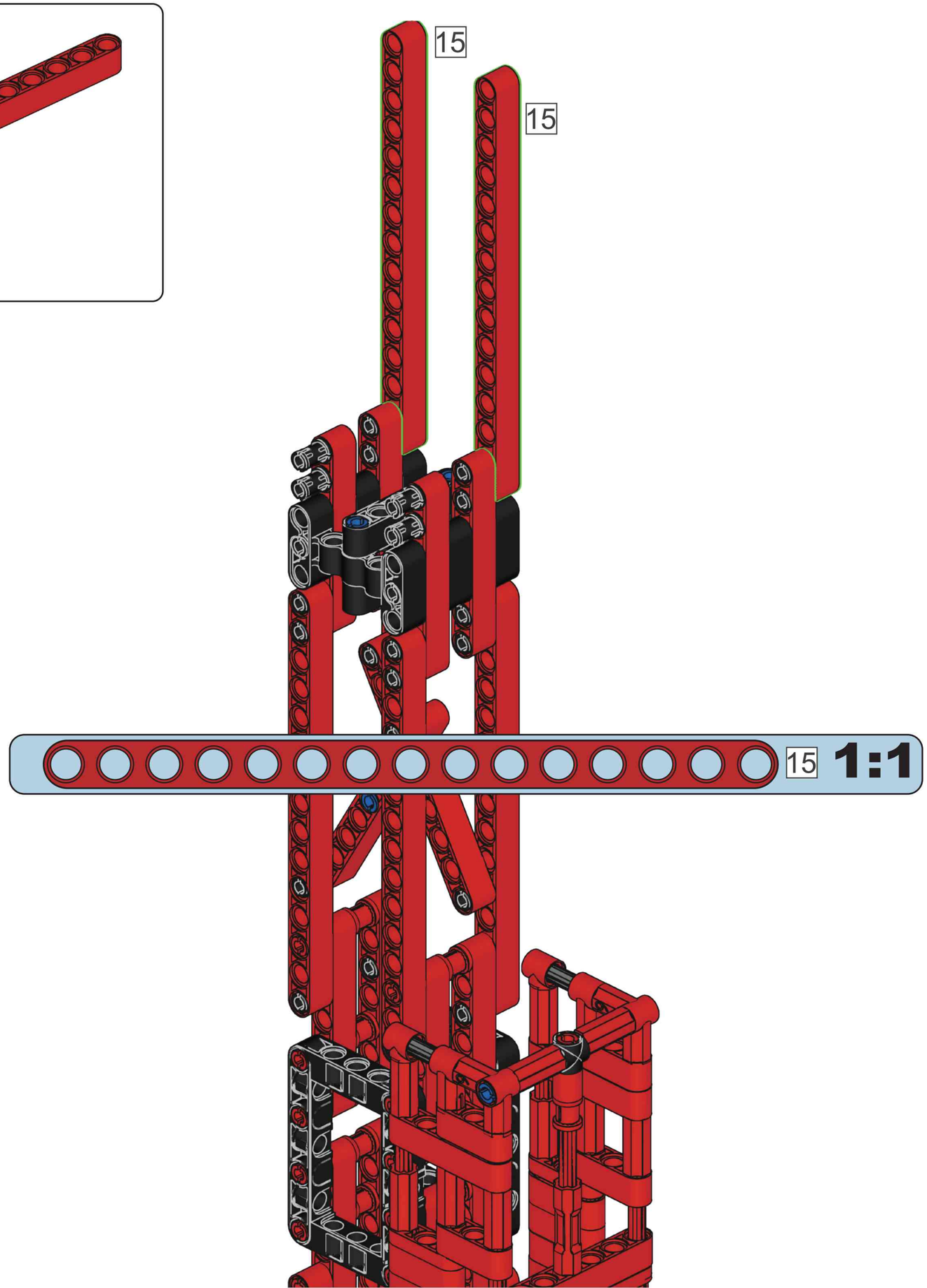

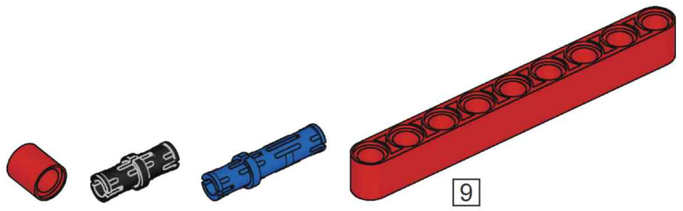

K44

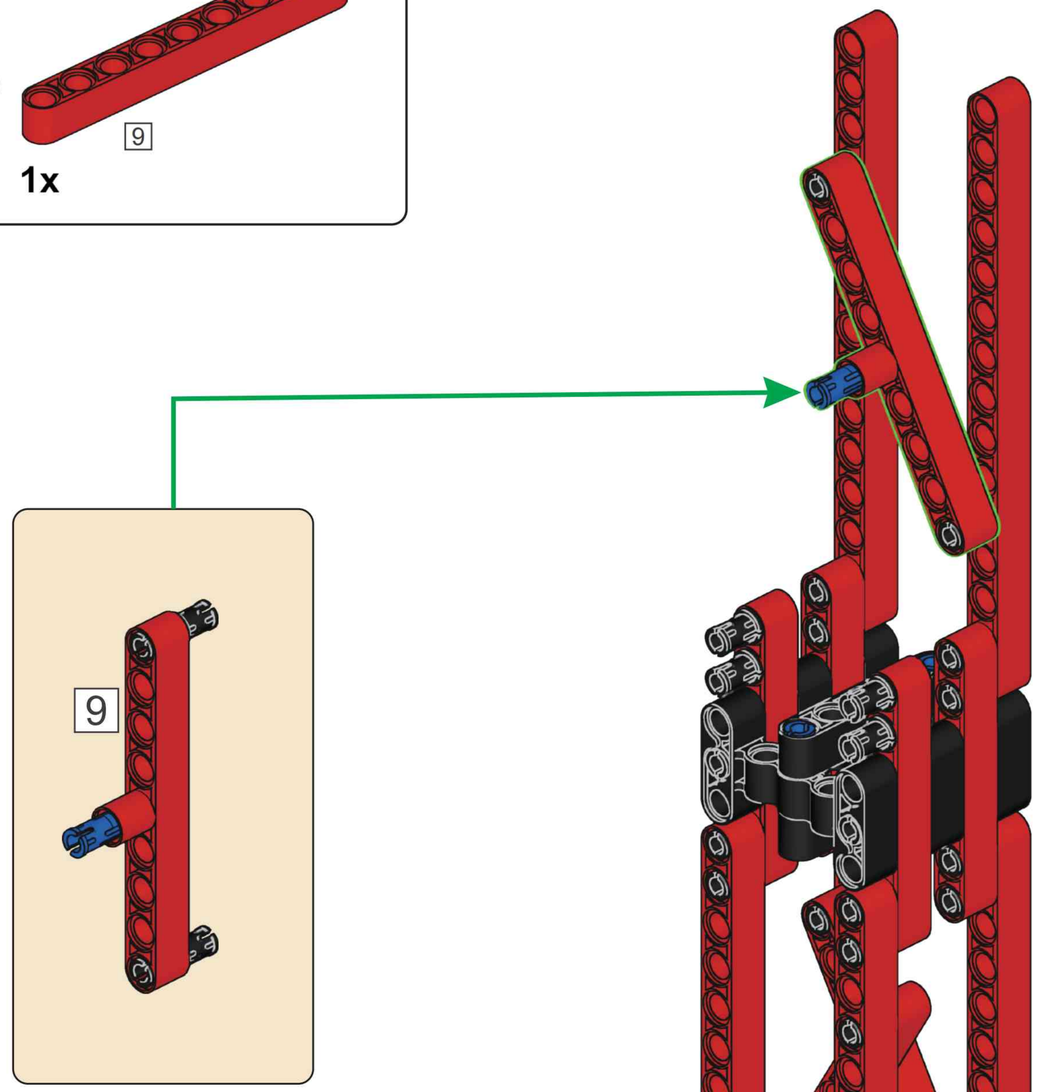

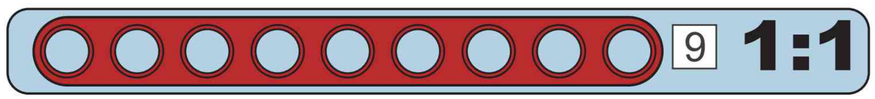

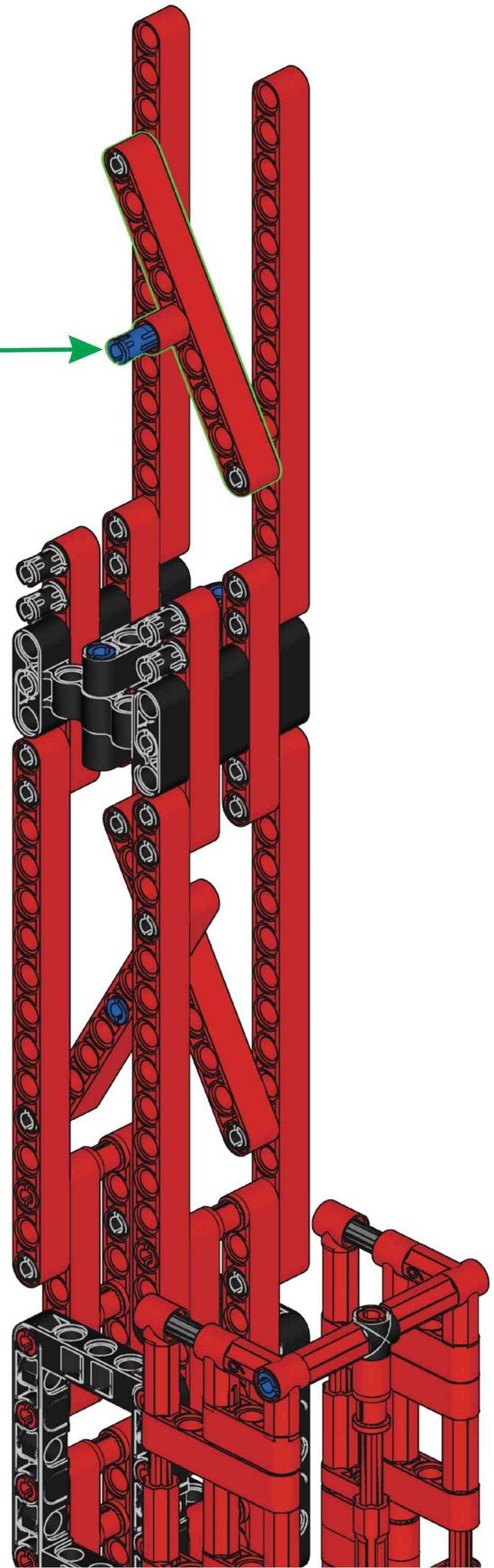

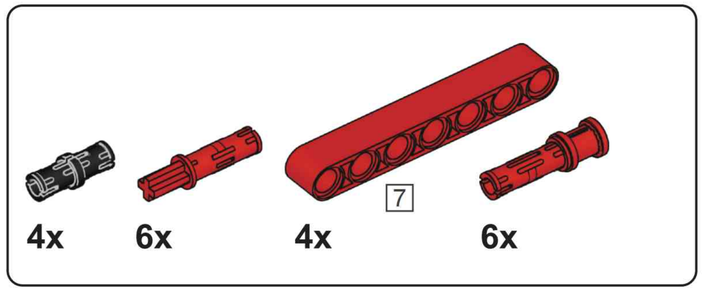

K45

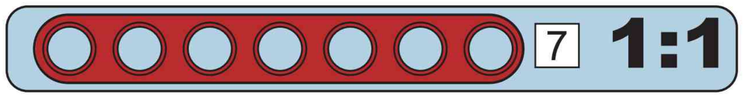

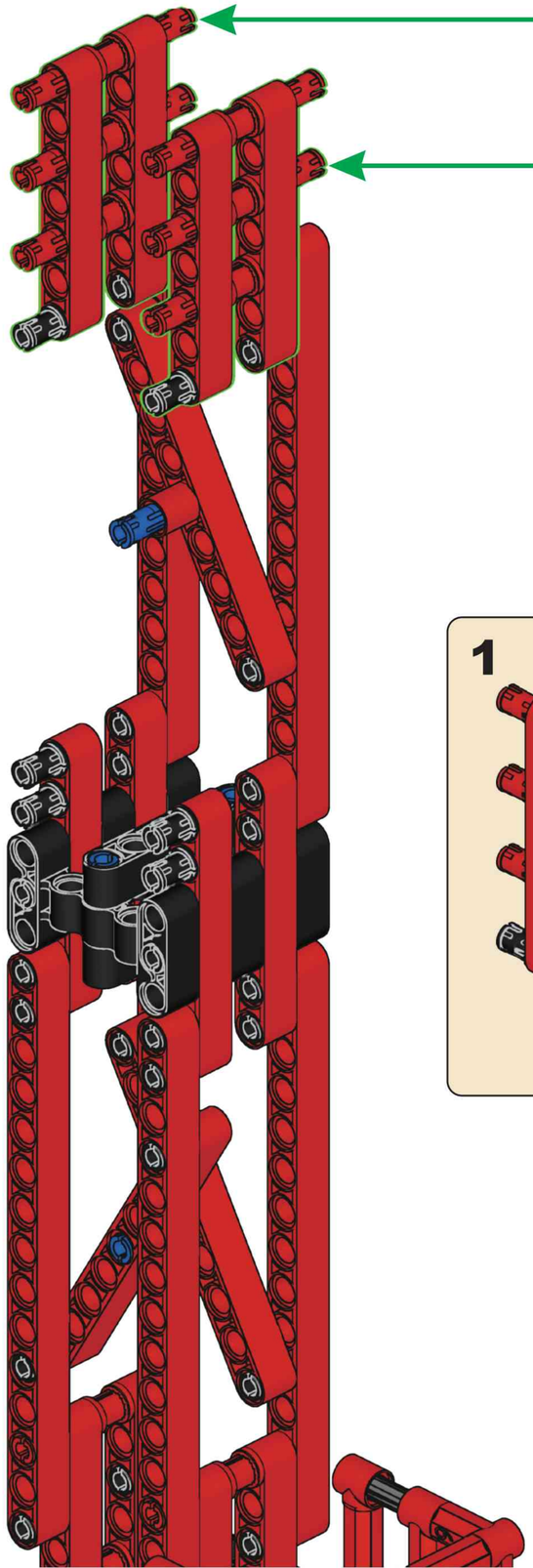

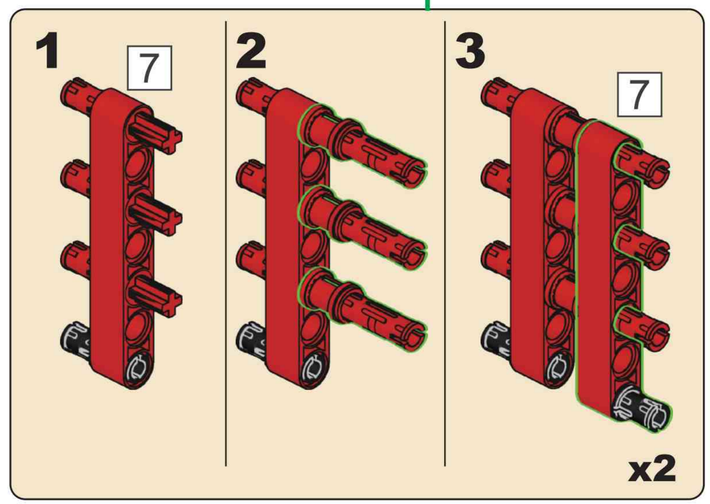

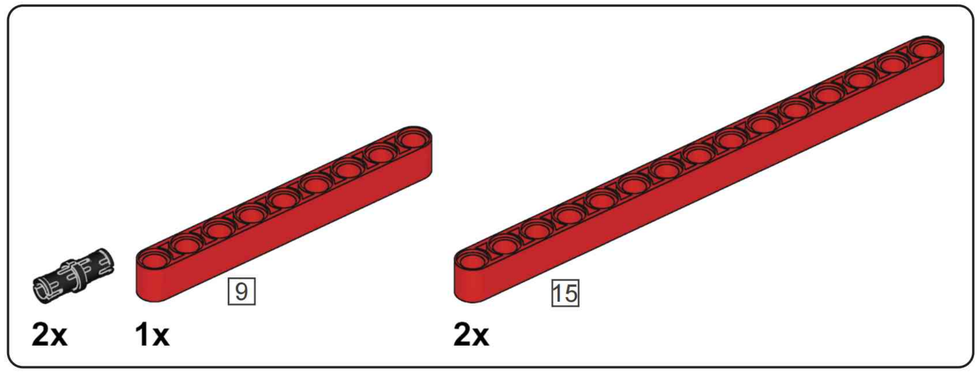

K46

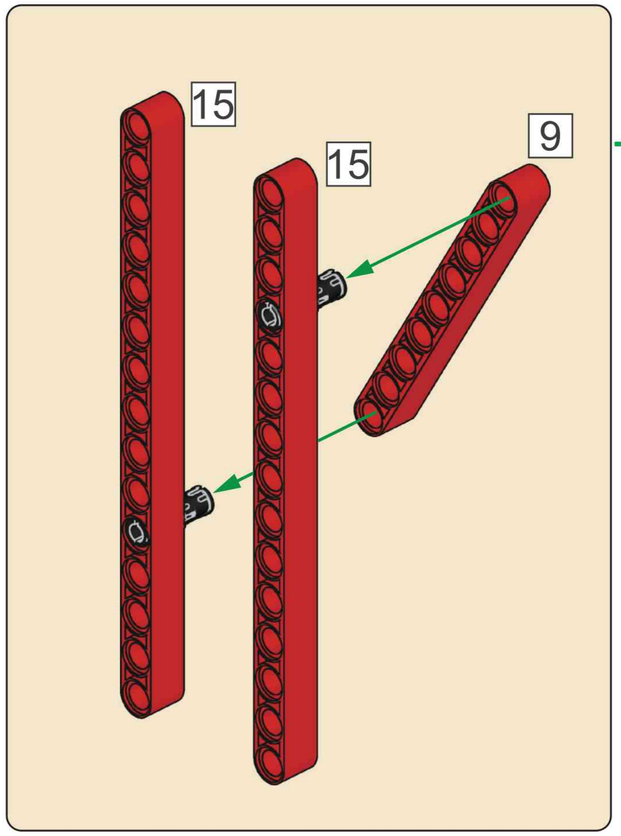

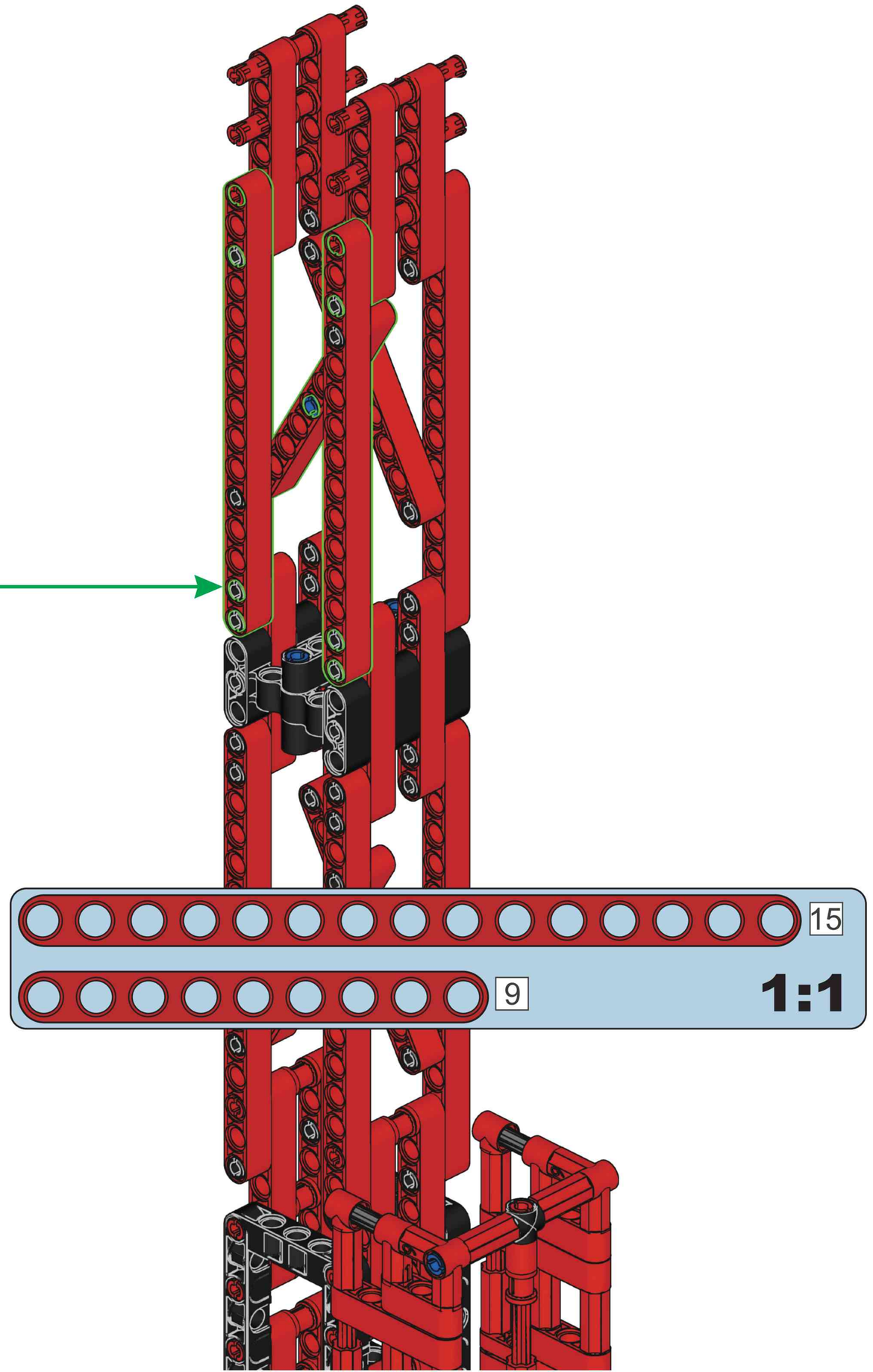

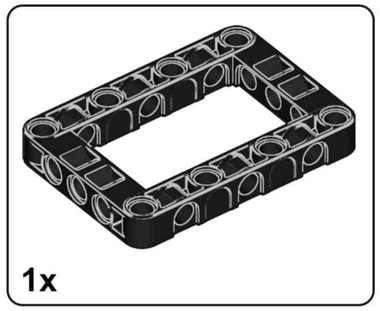

K47

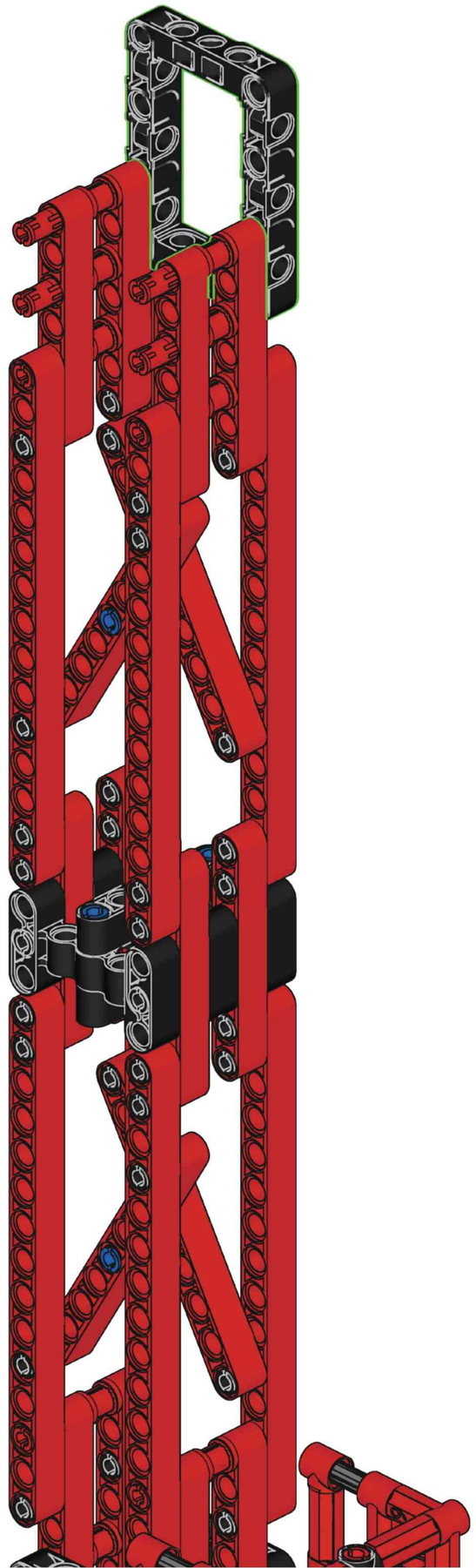

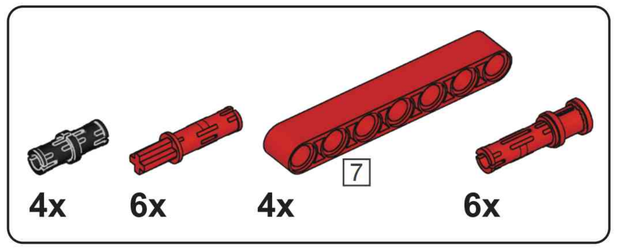

K48

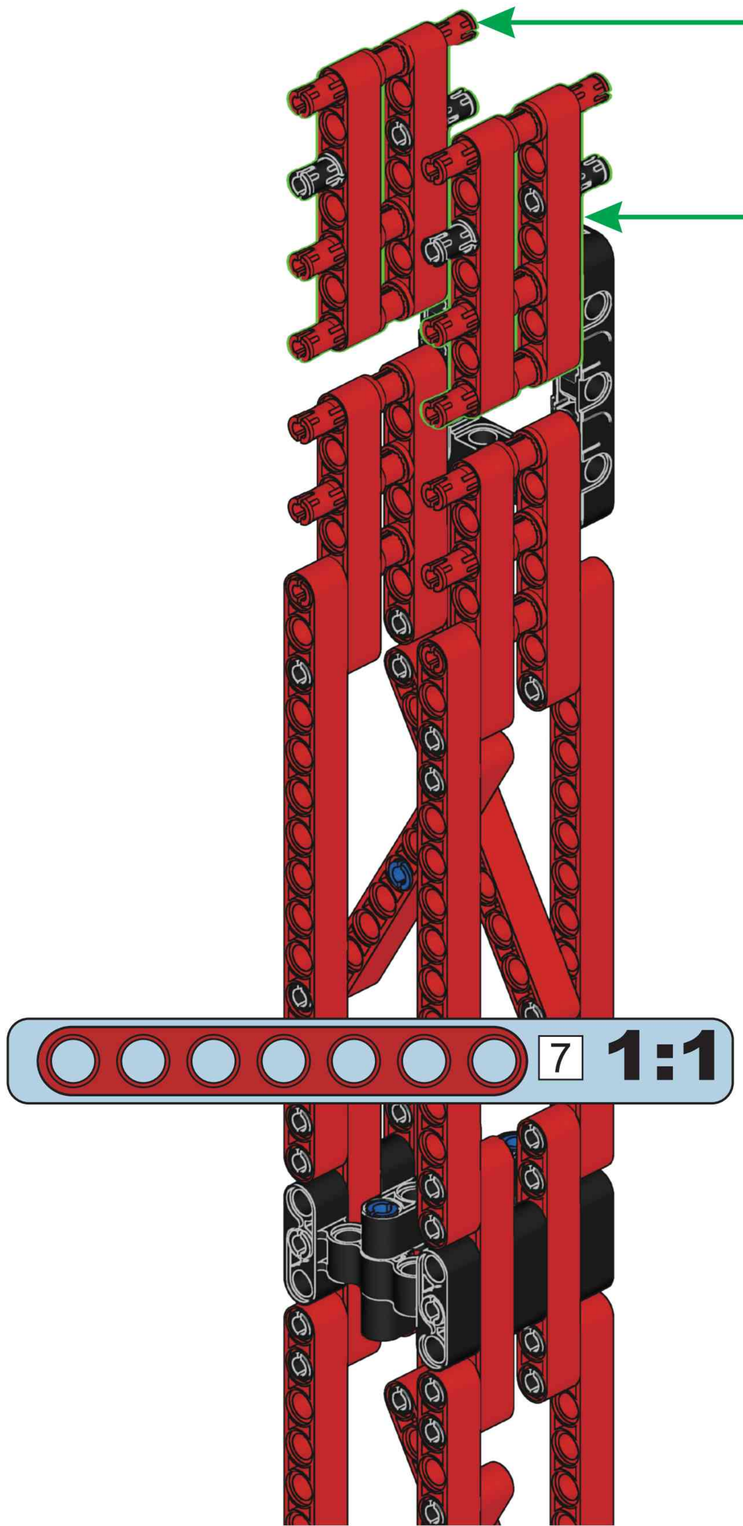

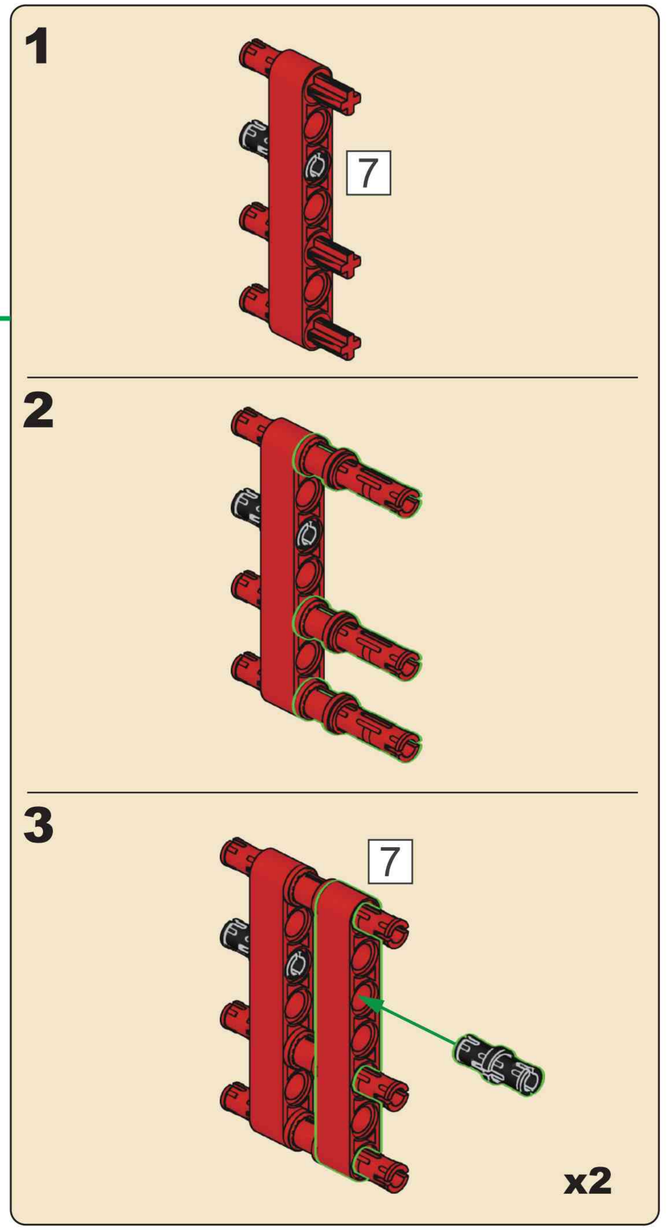

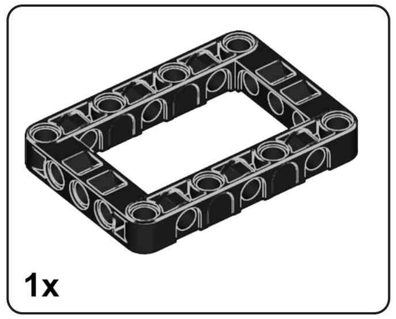

K49

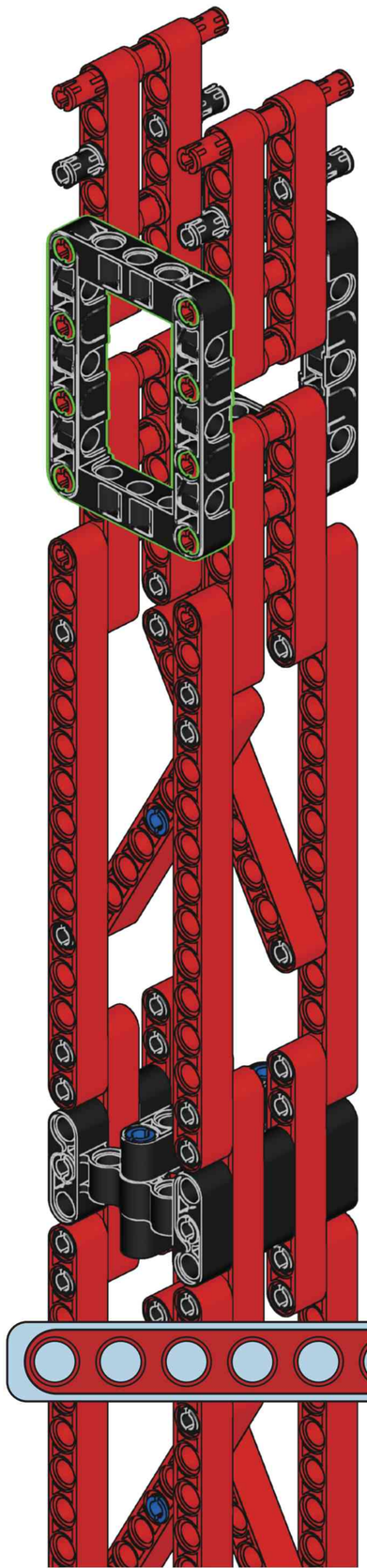

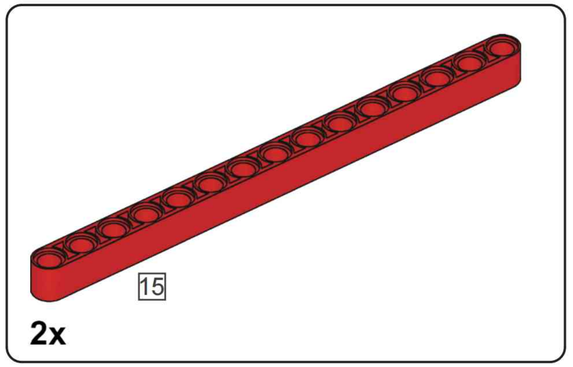

K50

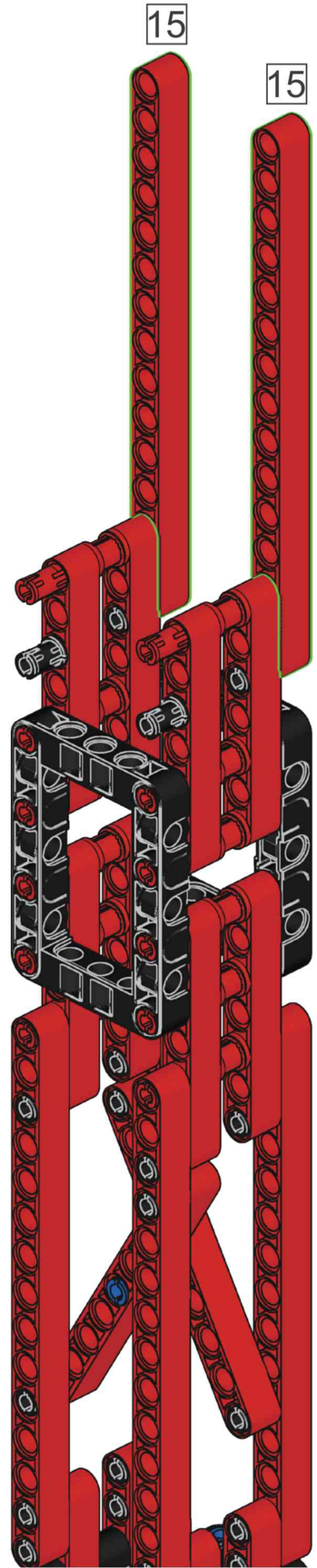

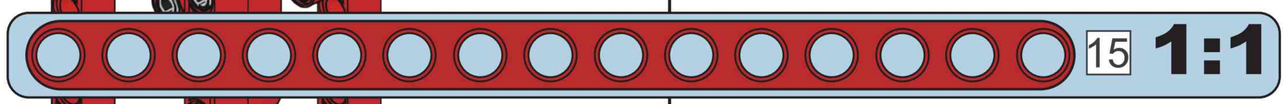

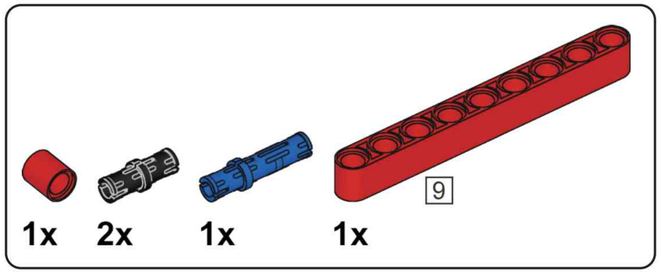

K51

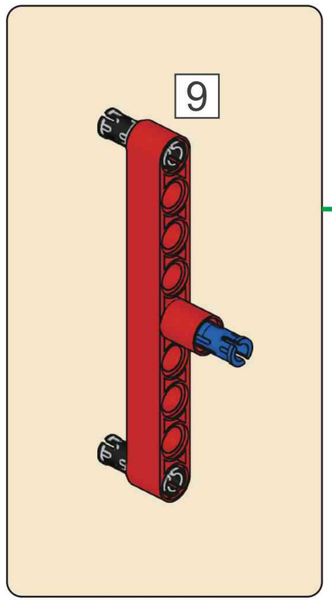

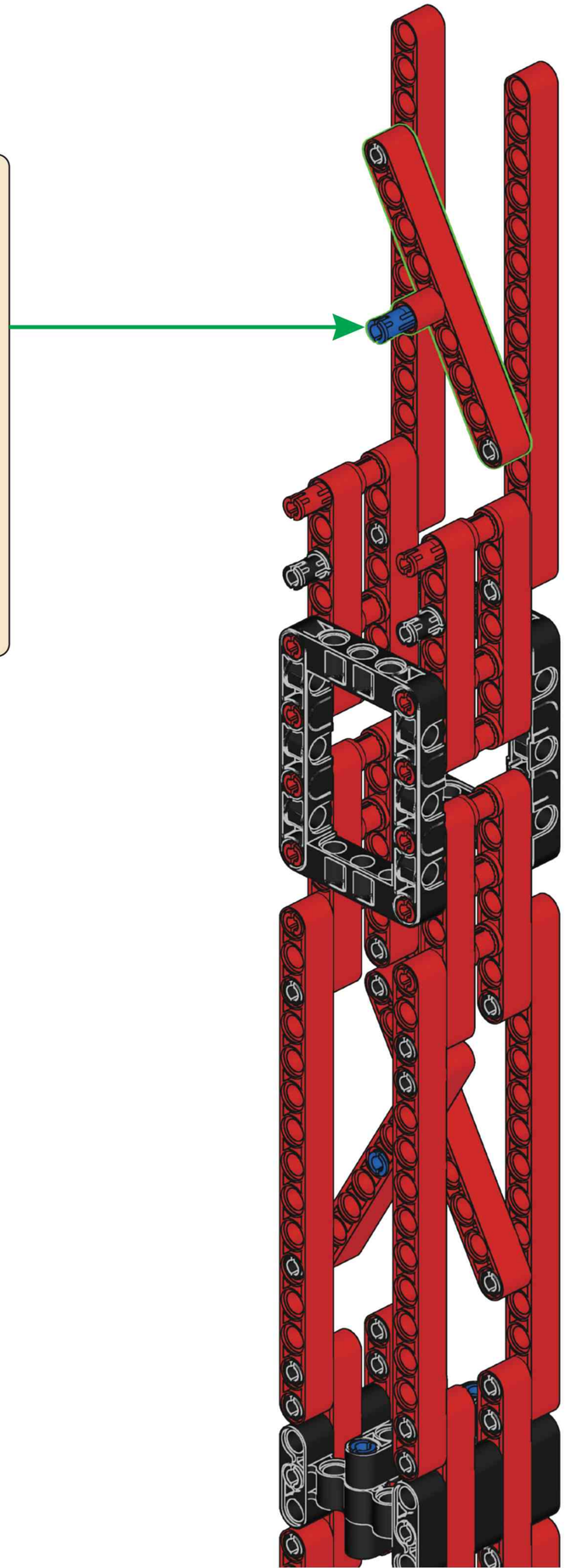

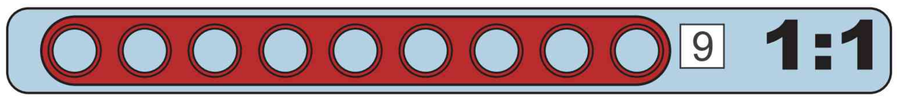

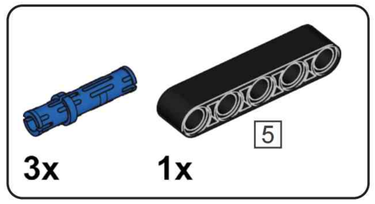

K52

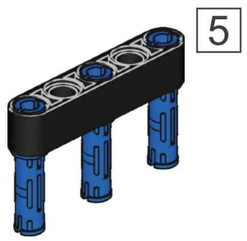

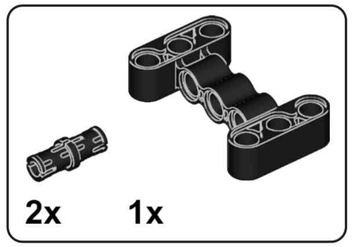

K53



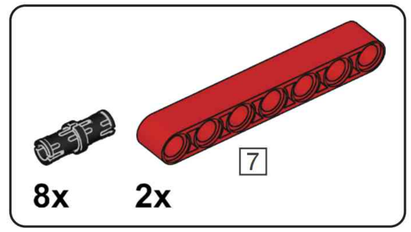

K54

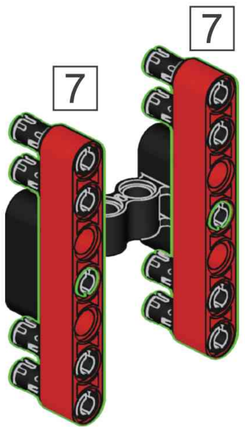

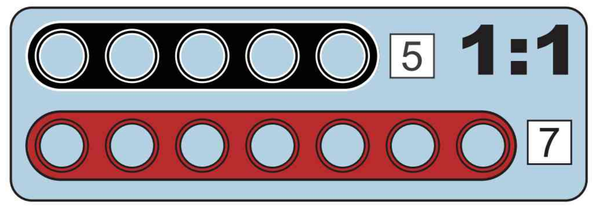

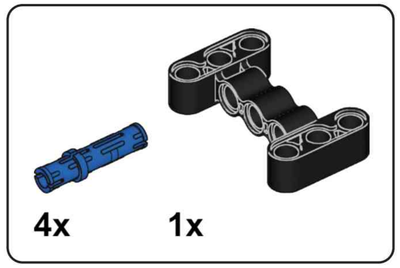

K55

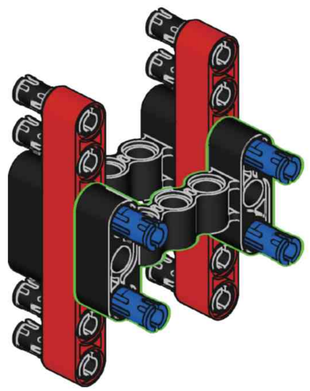

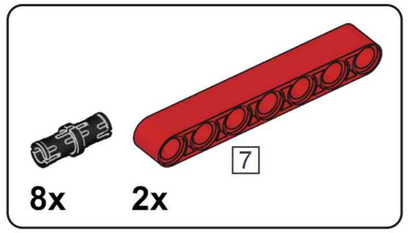

K56

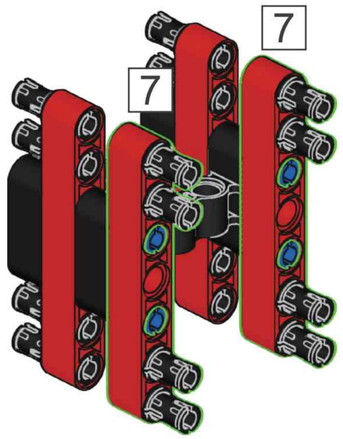

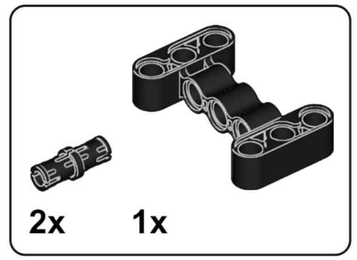

K57

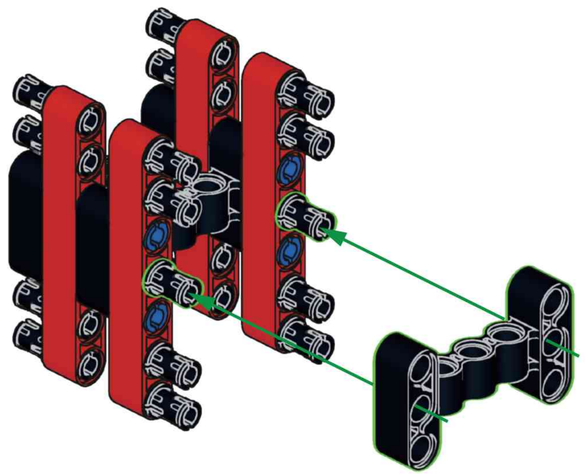

K58

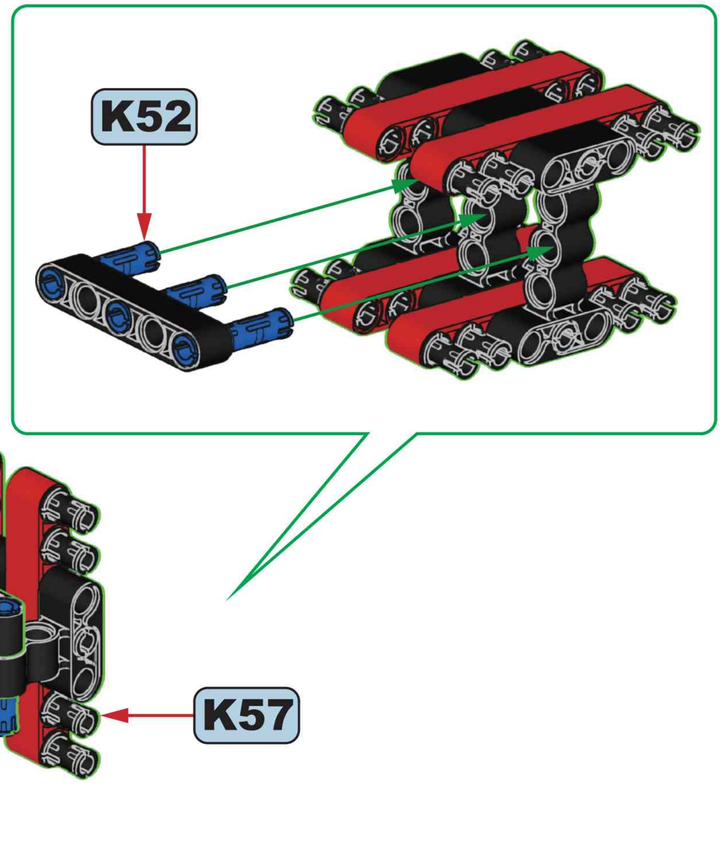

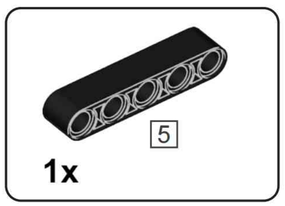

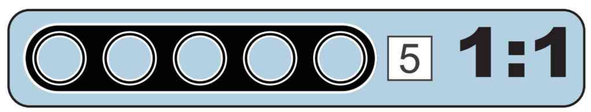

K59

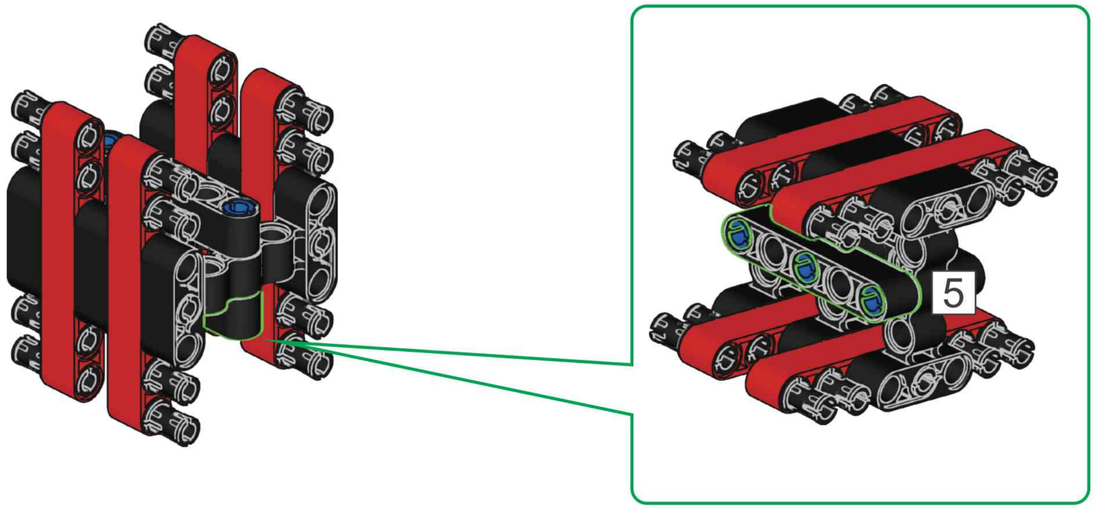

K60

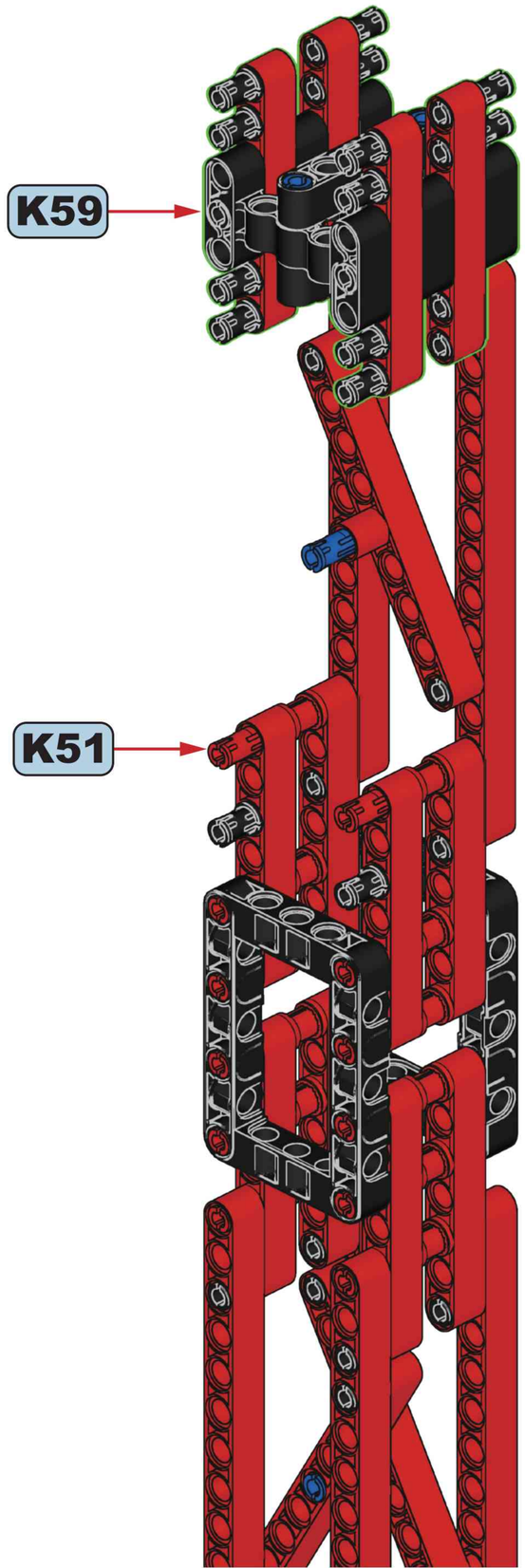

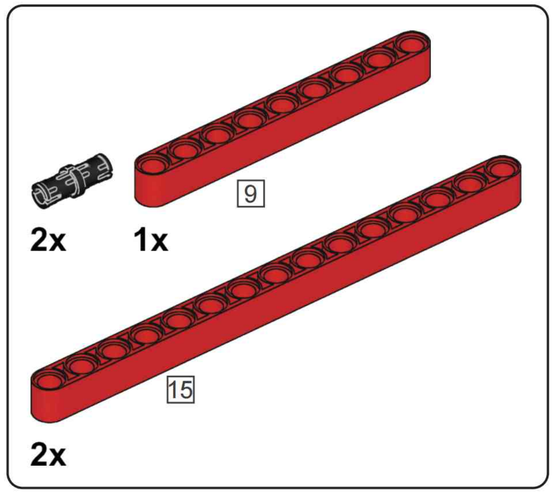

K61

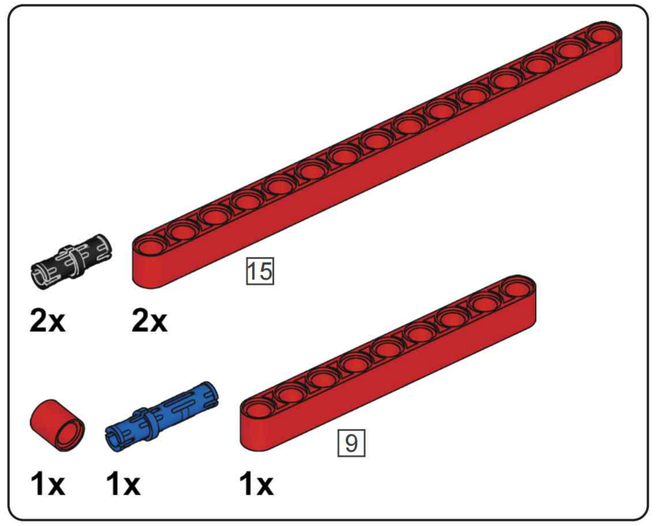

K62

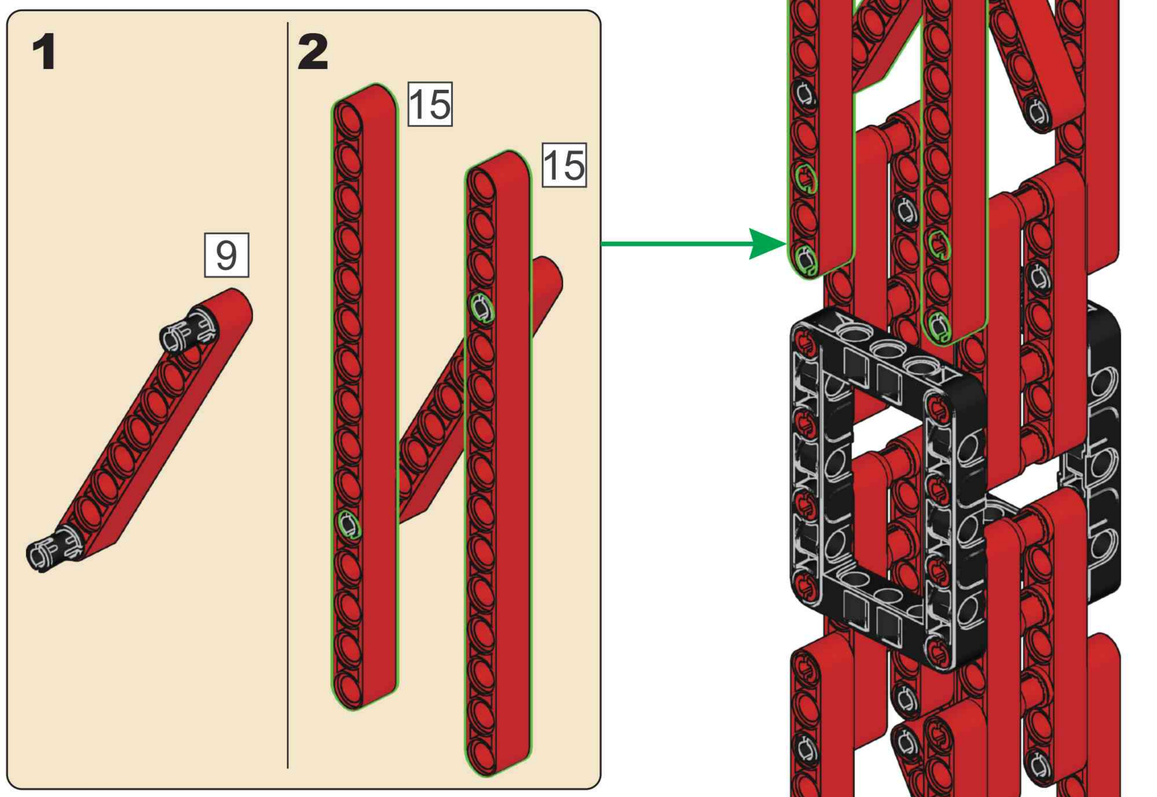

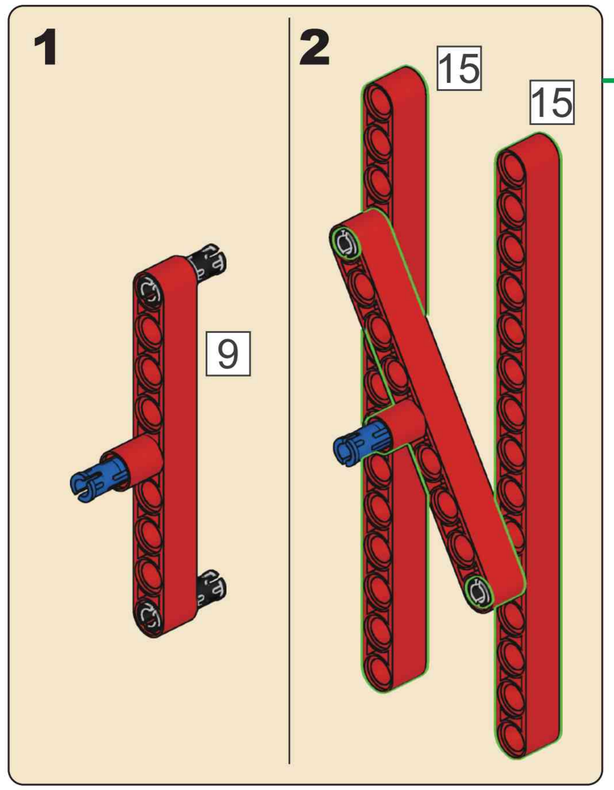

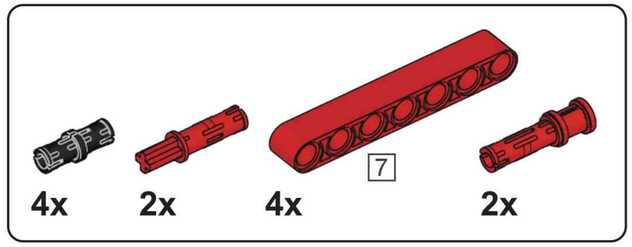

K63

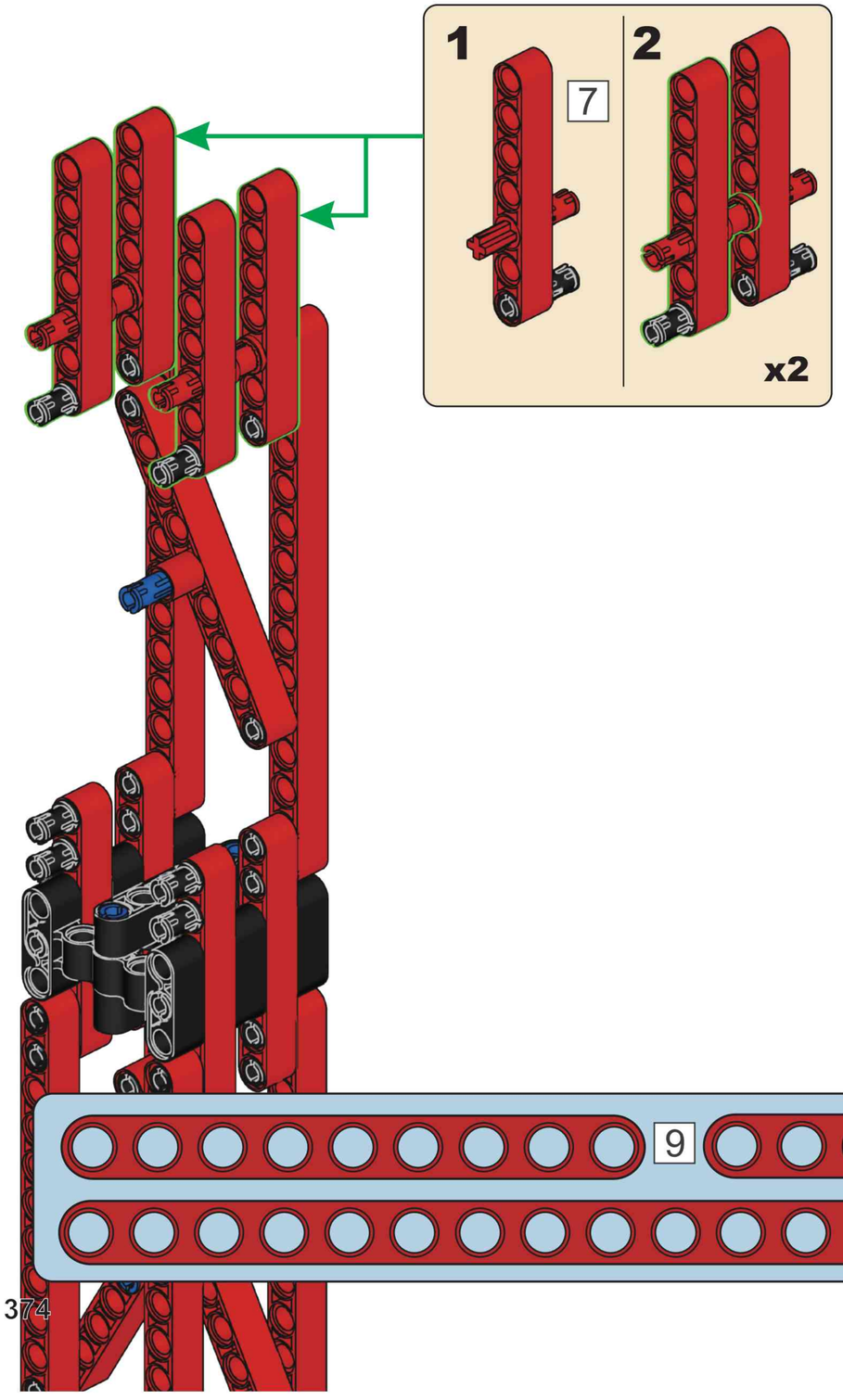

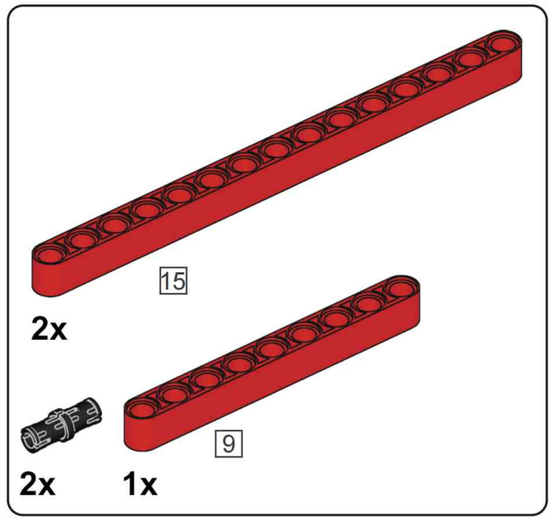

K64

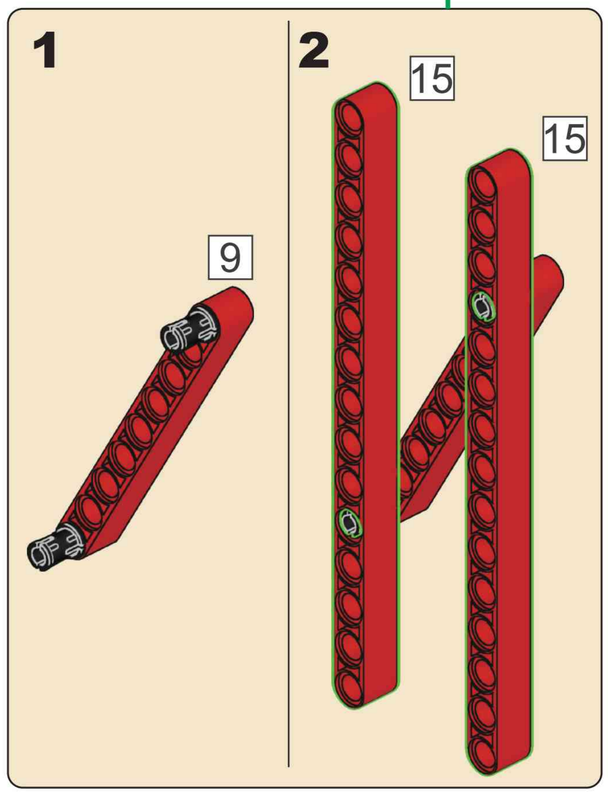

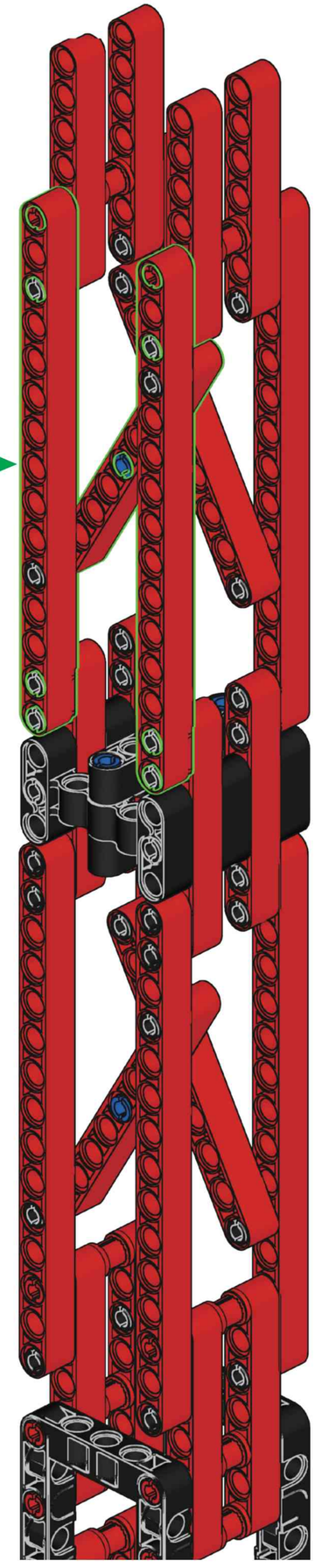

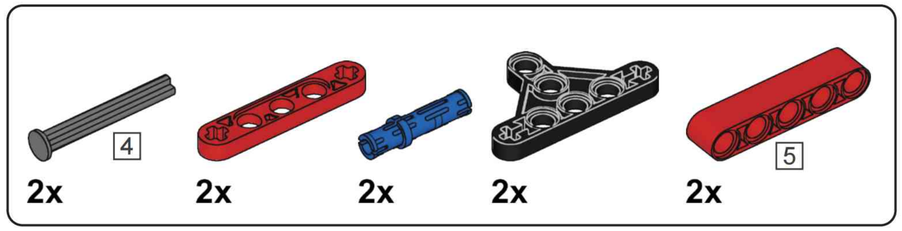

K65

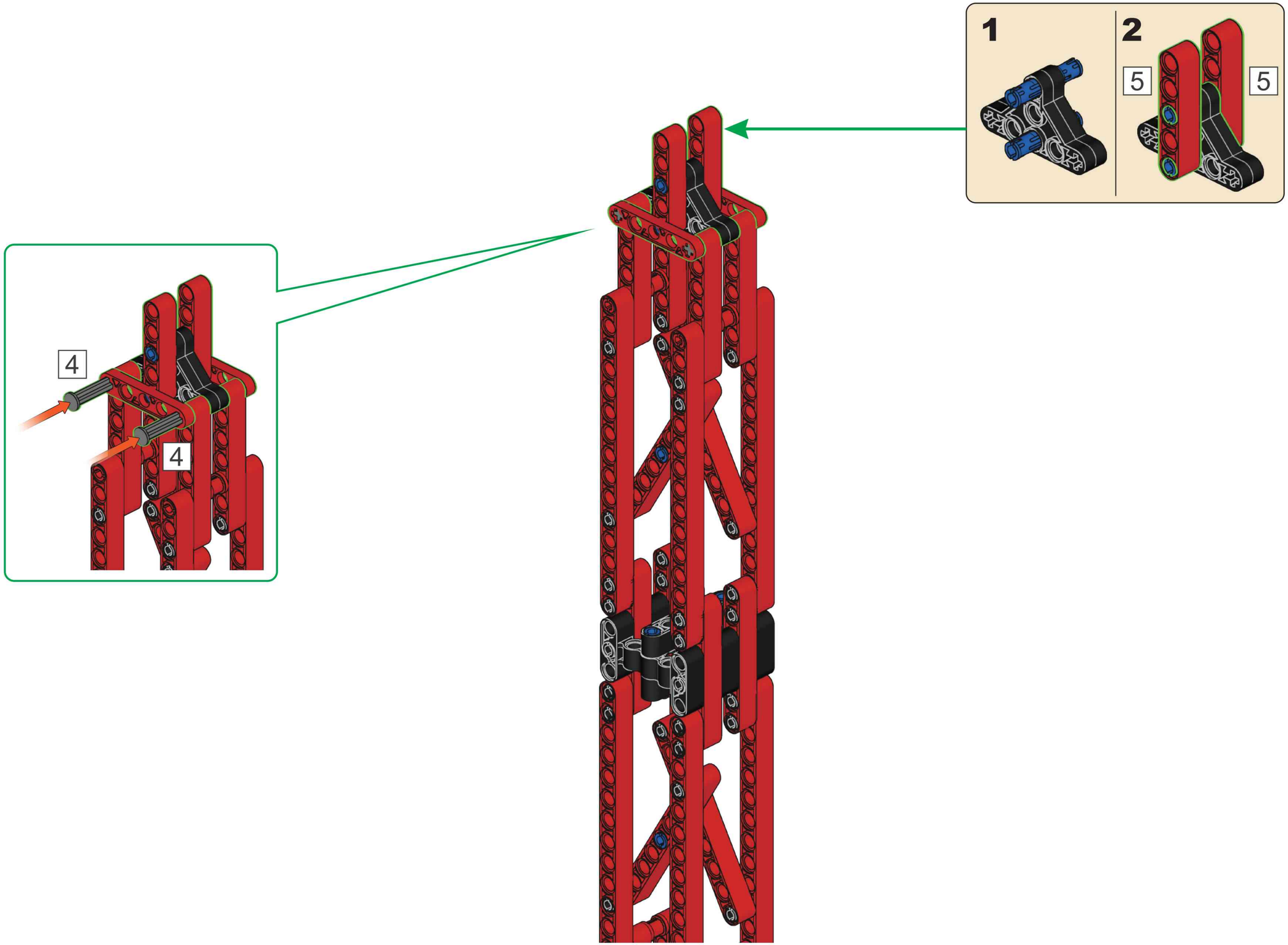

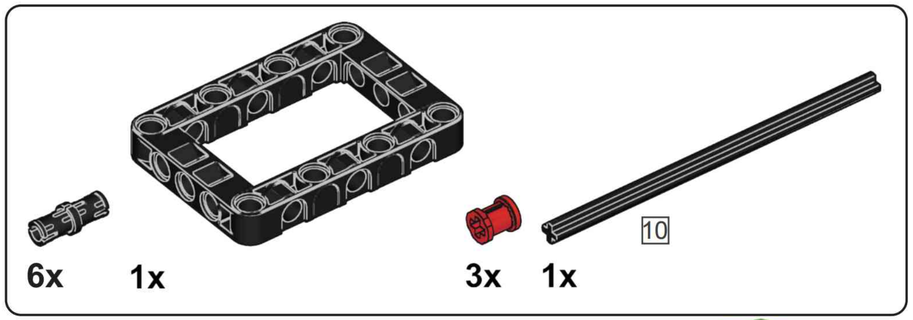

K66

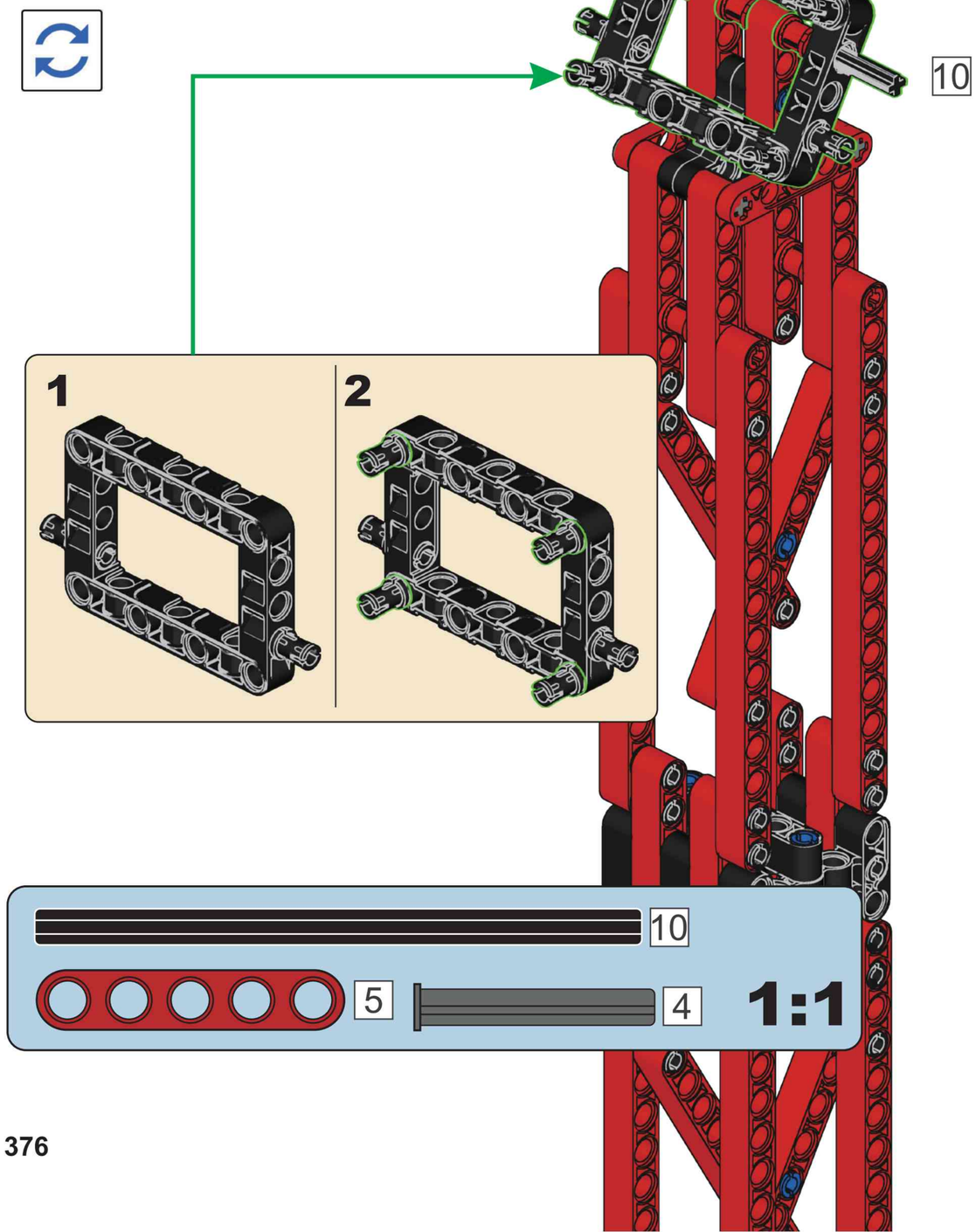

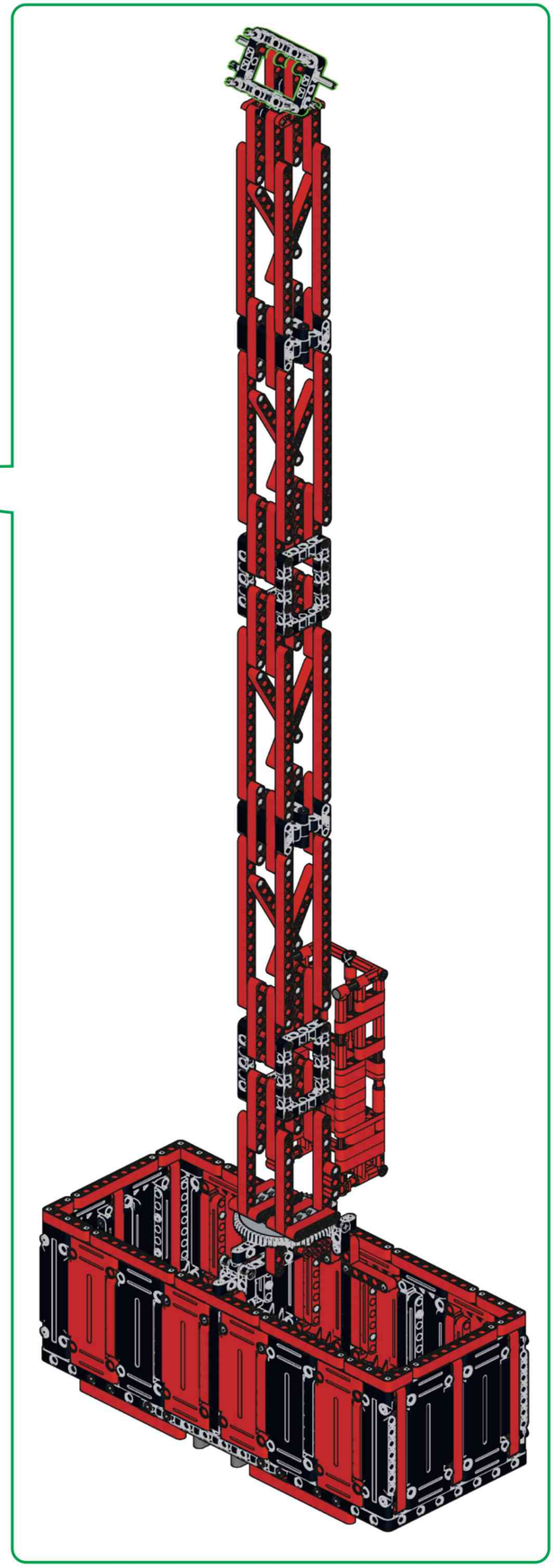

K67

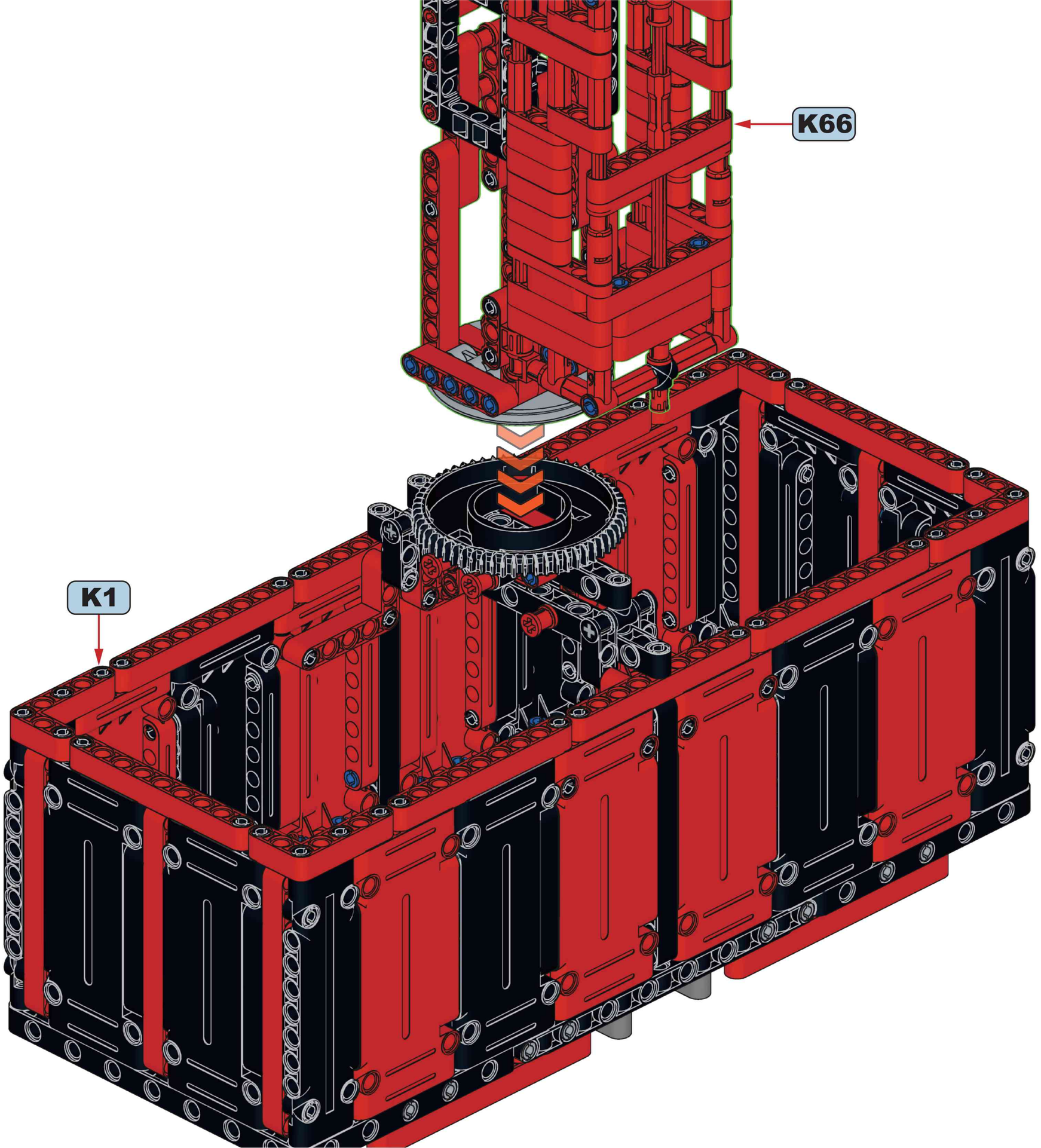

K68

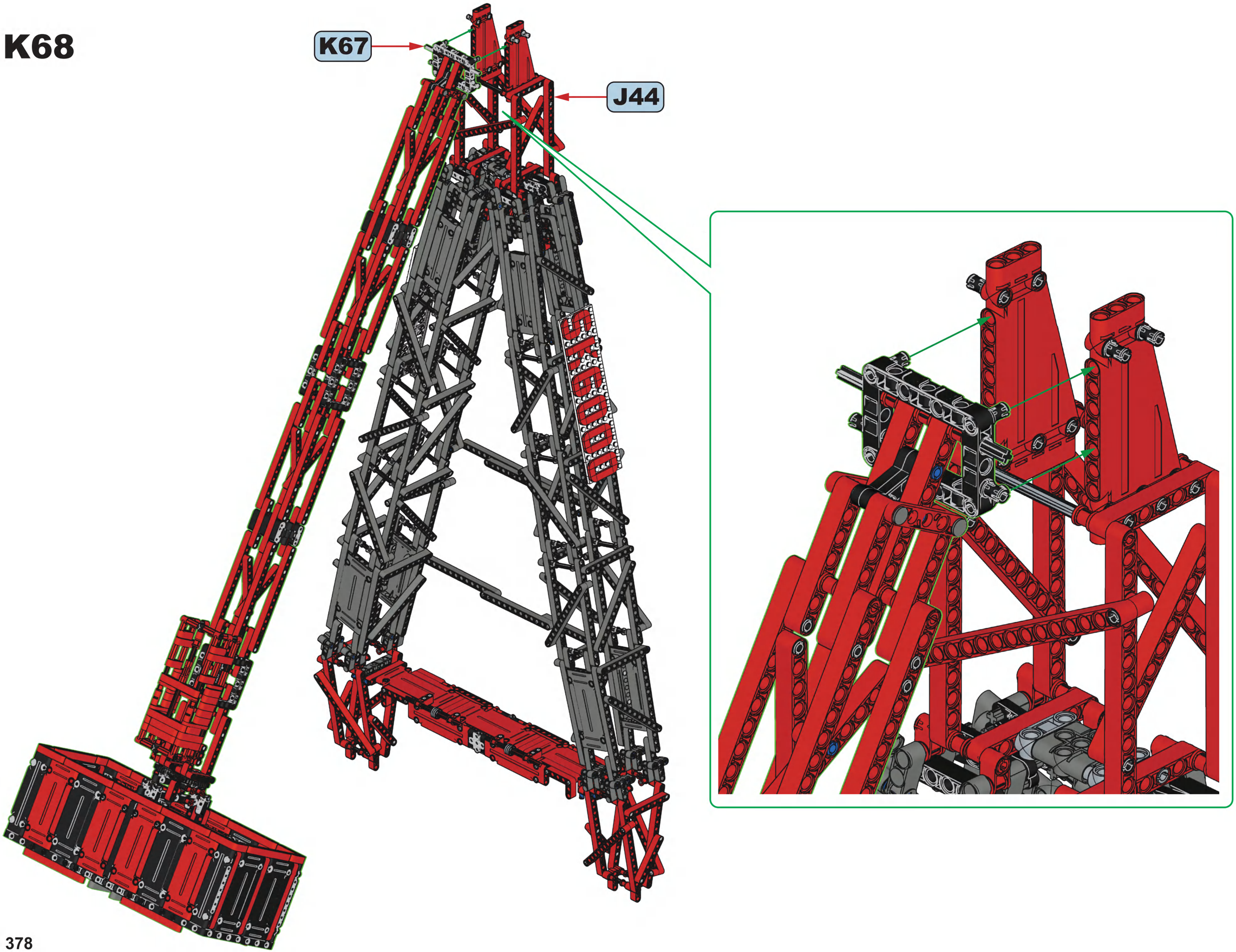

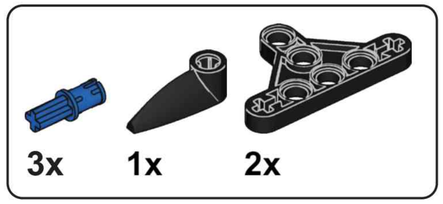

K69

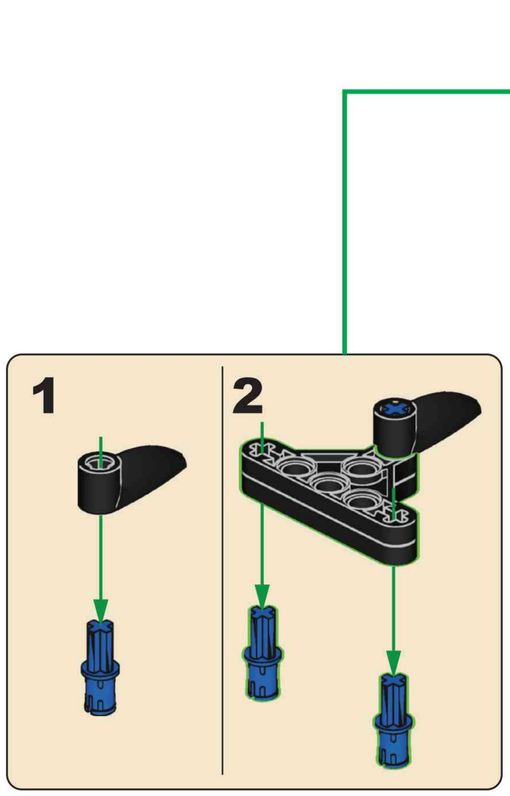

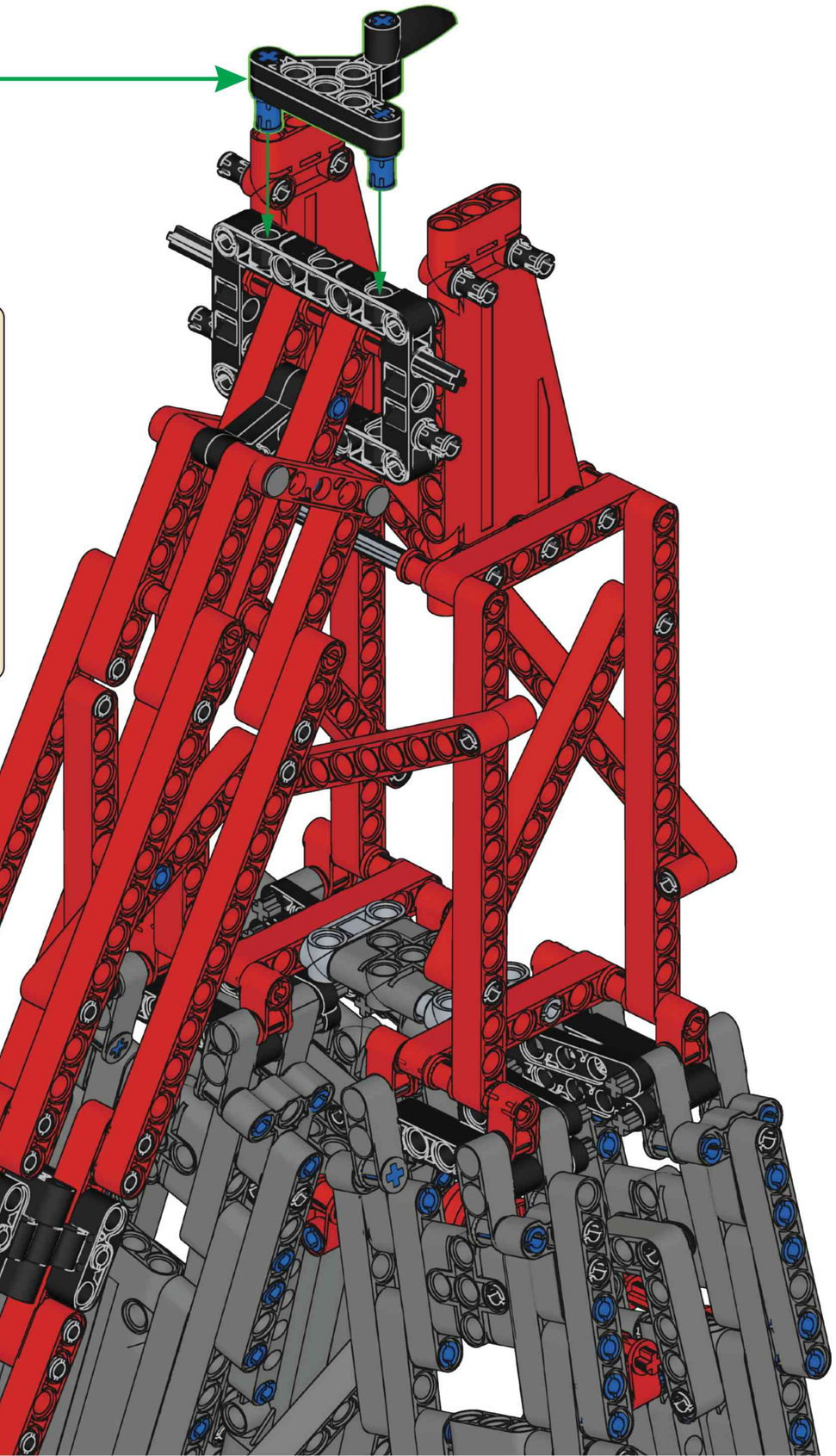

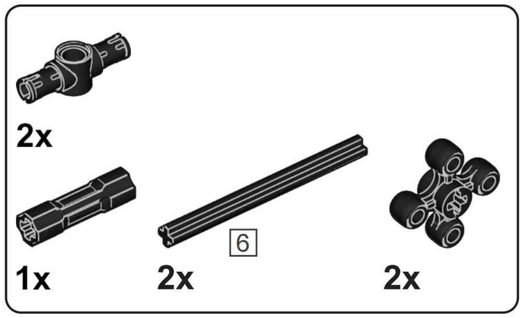

K70

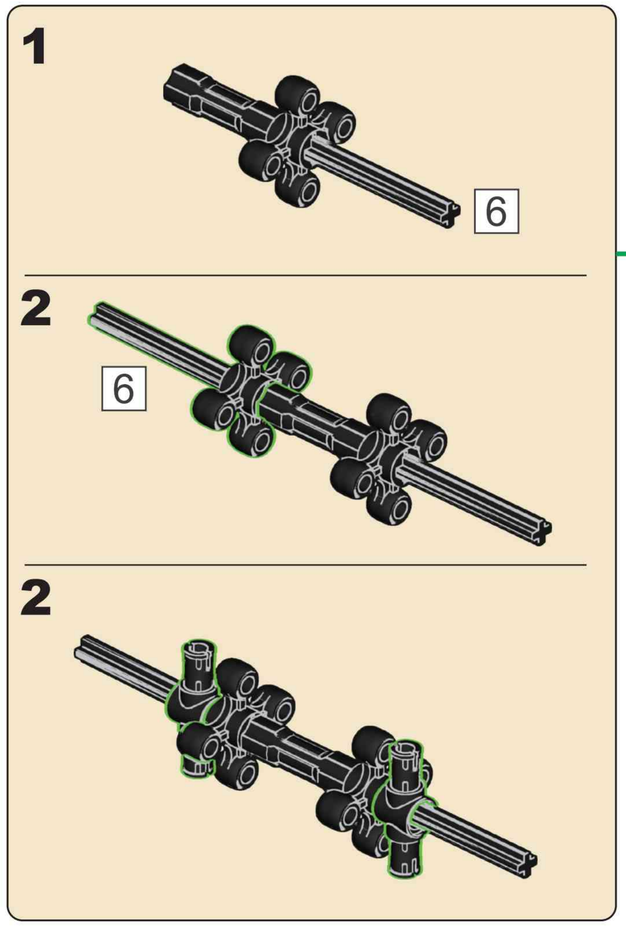

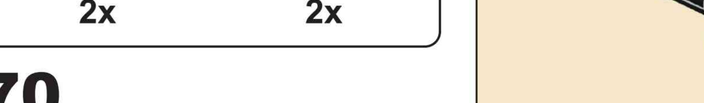

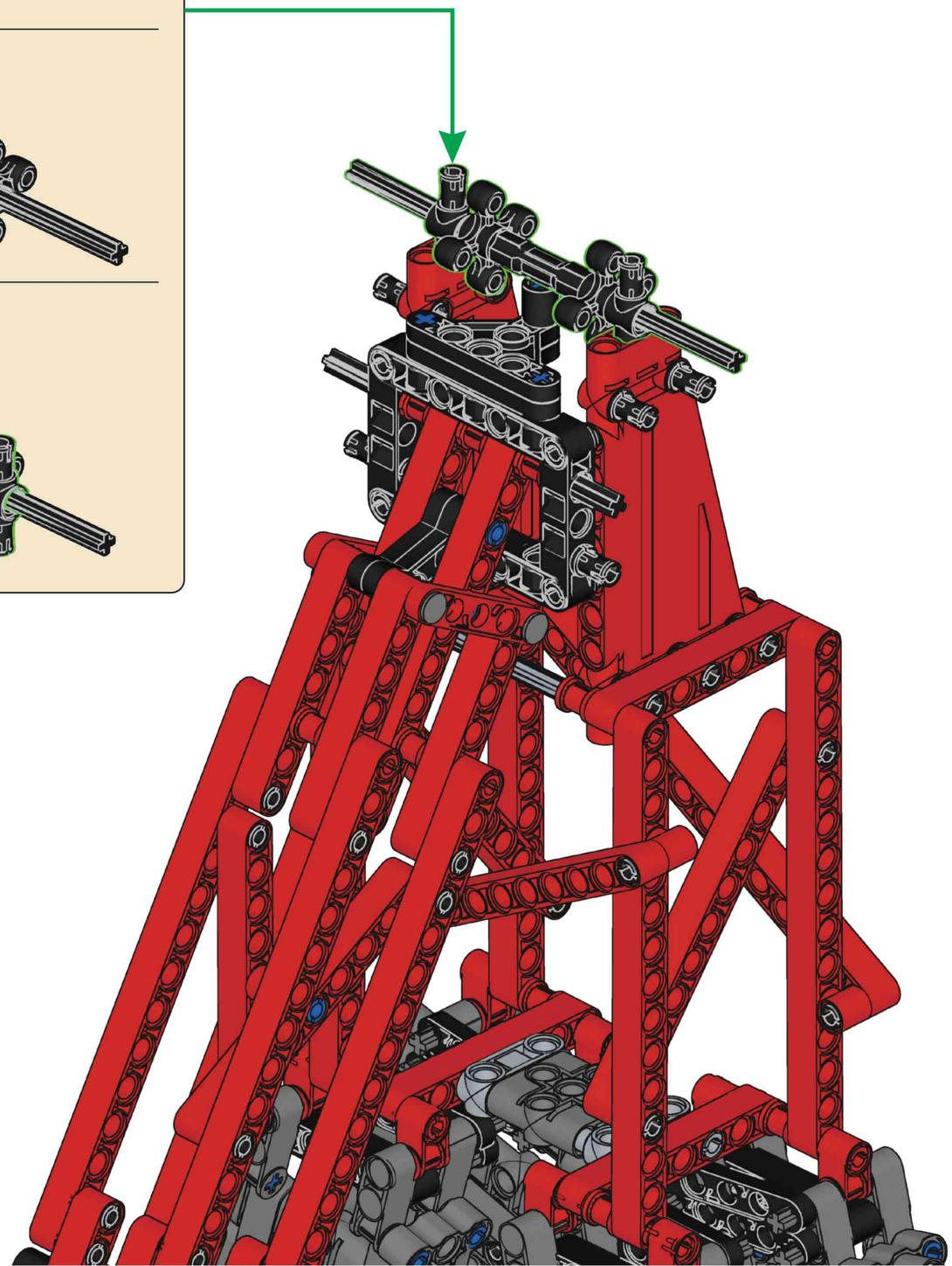

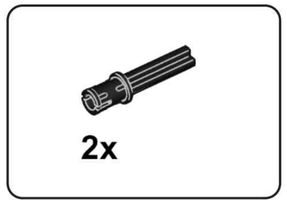

K71

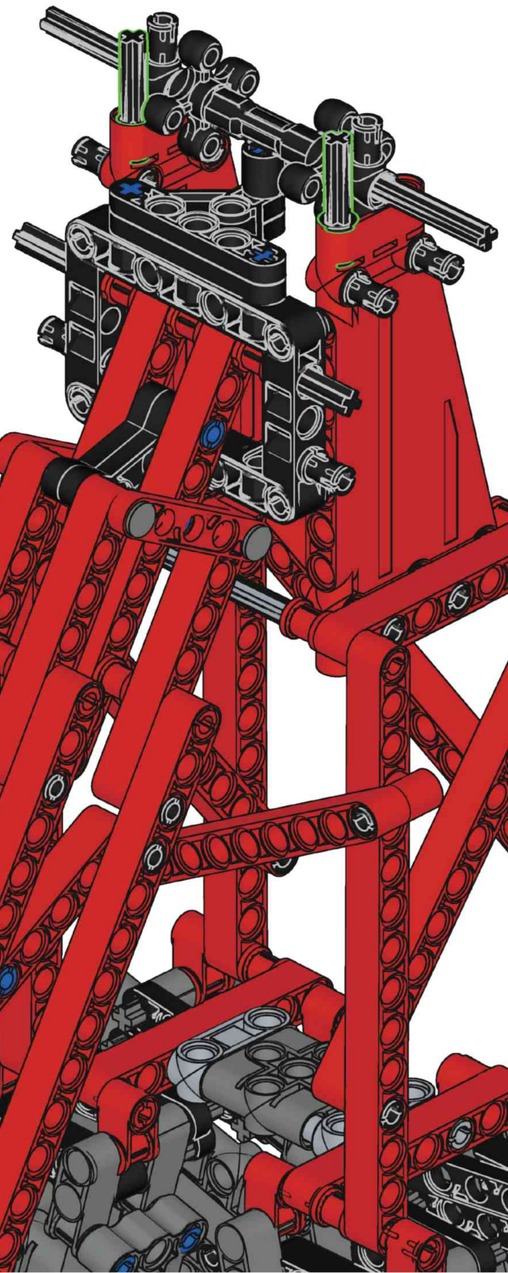

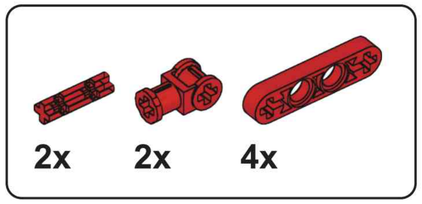

K72

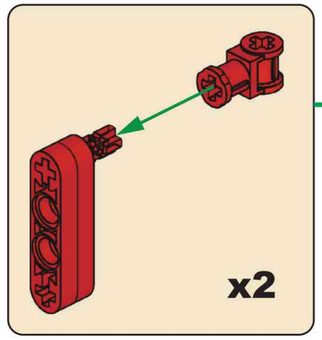

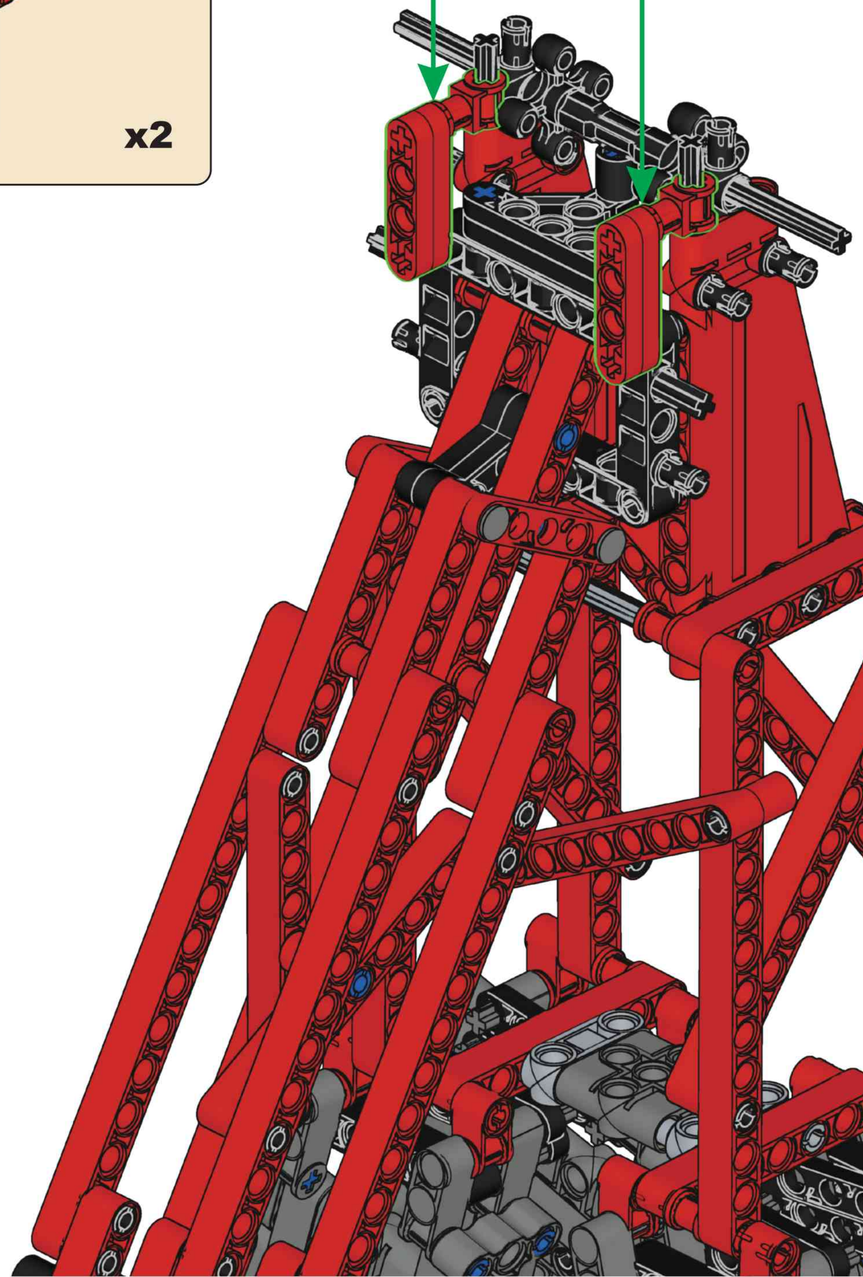

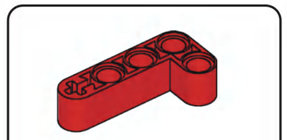

K73

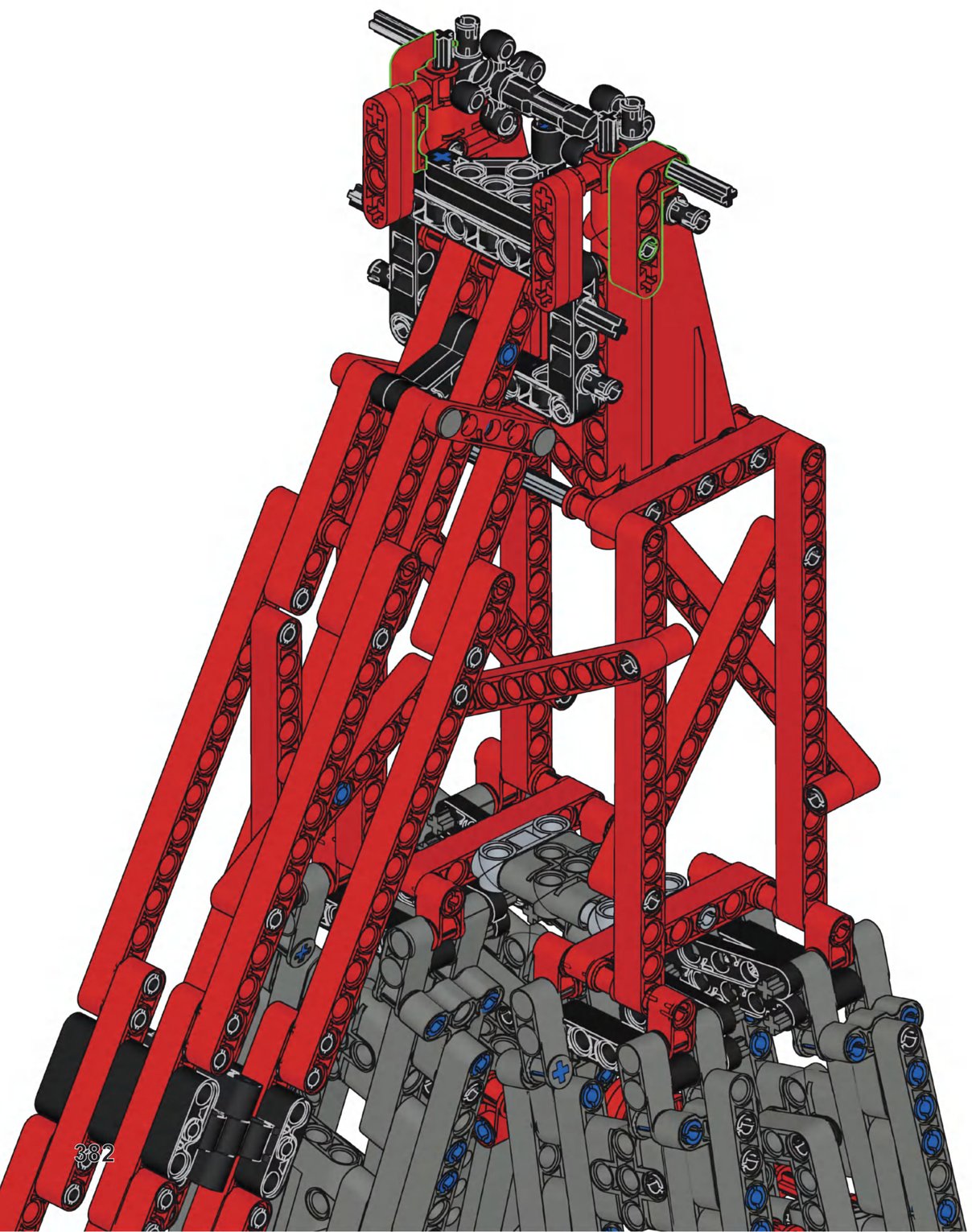



K74

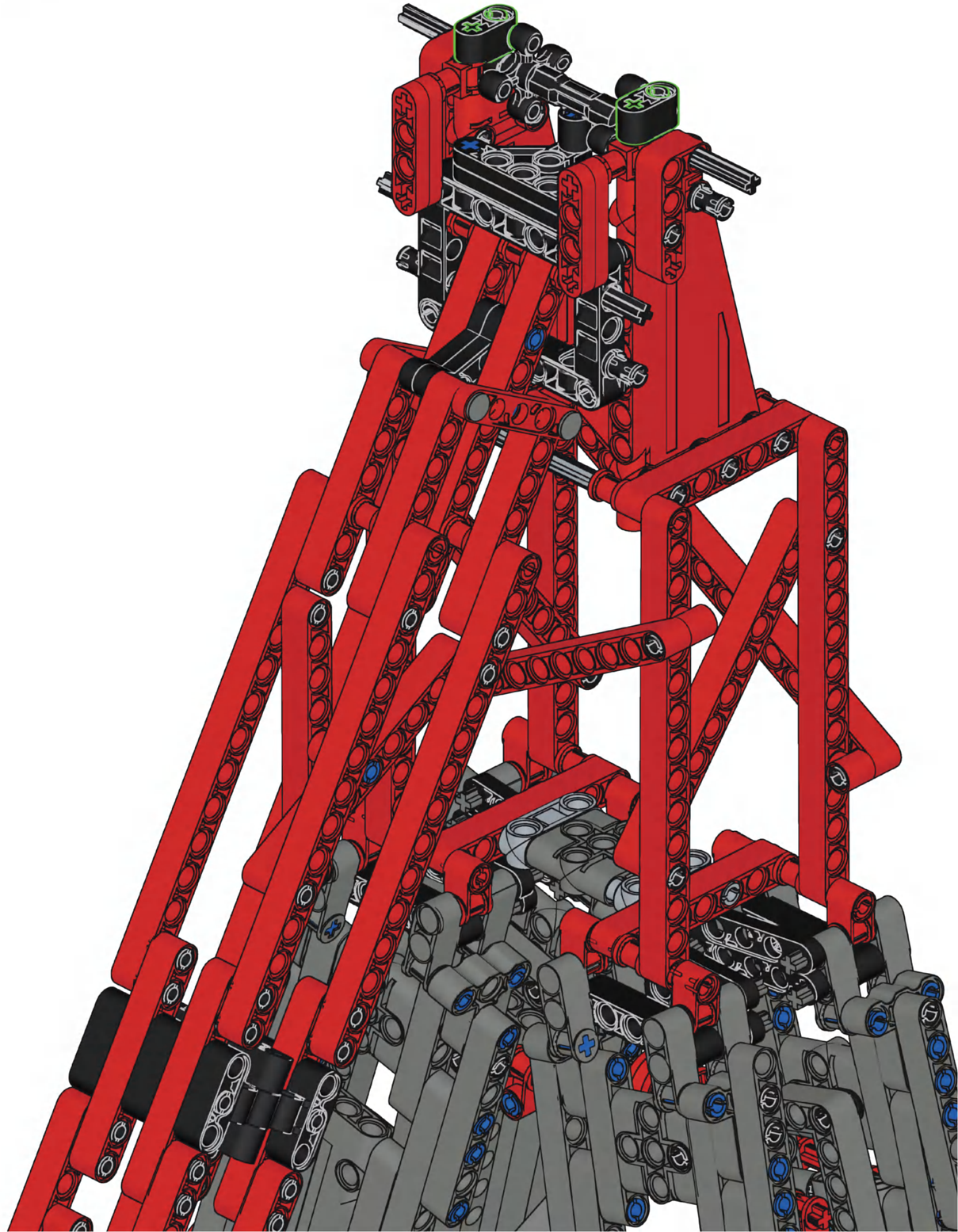

12

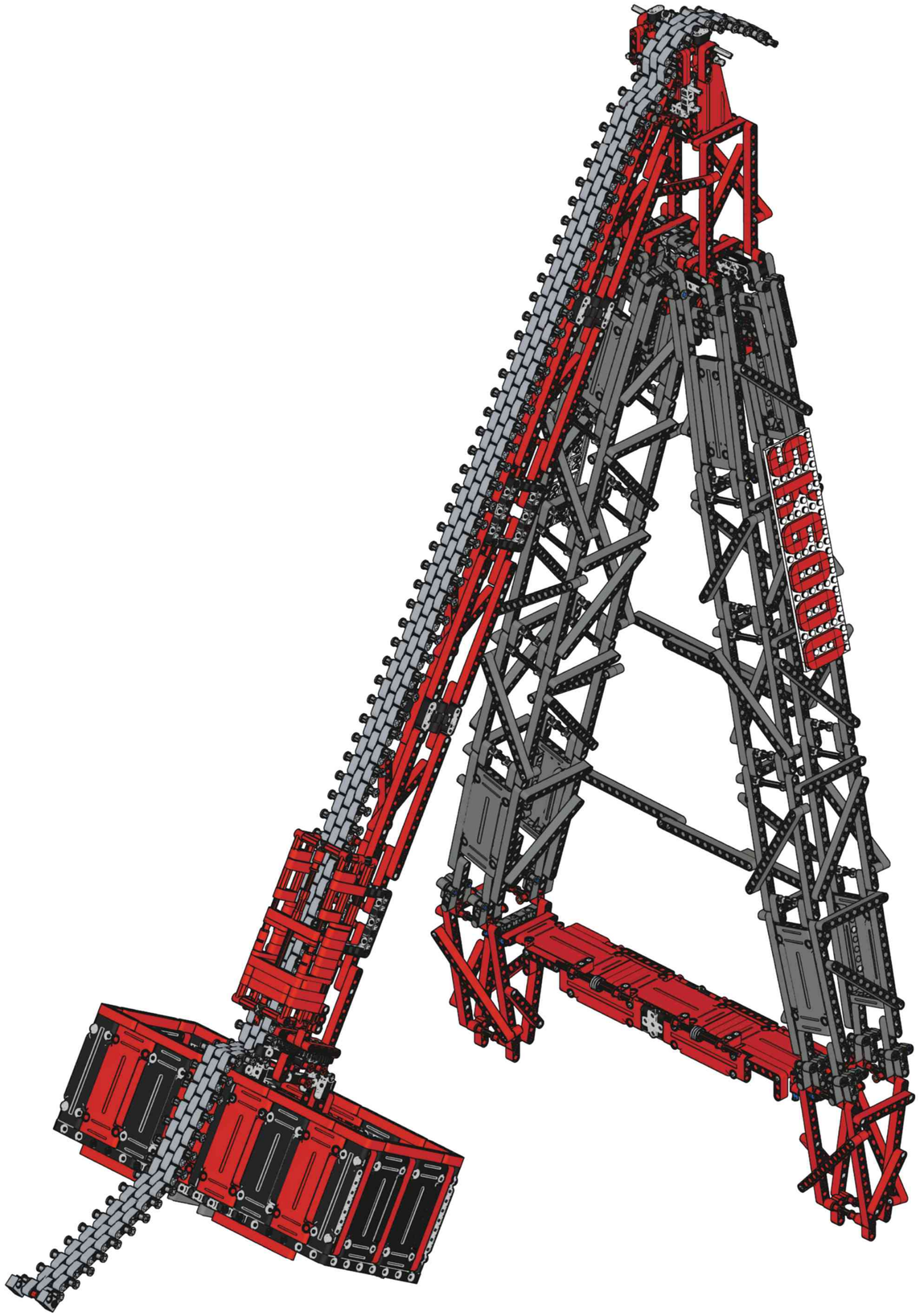

L

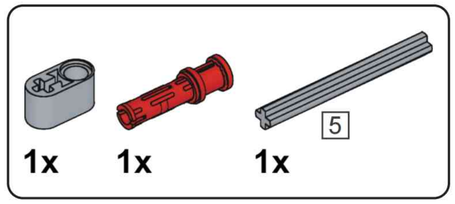

L1

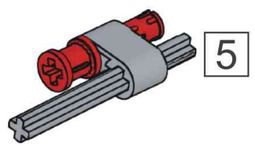

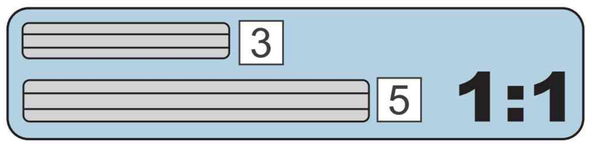

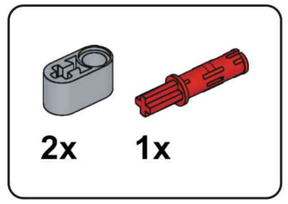

L2

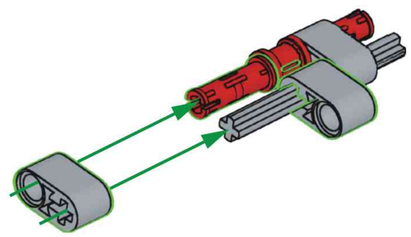

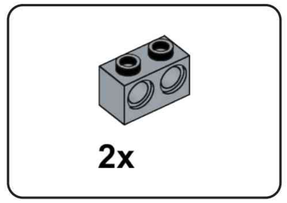

L3

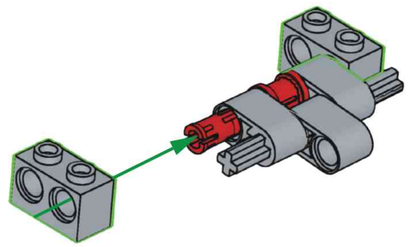

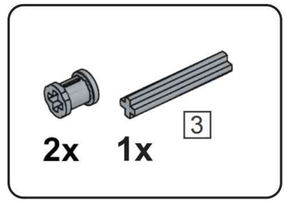

L4

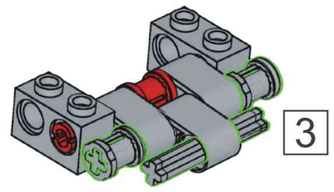

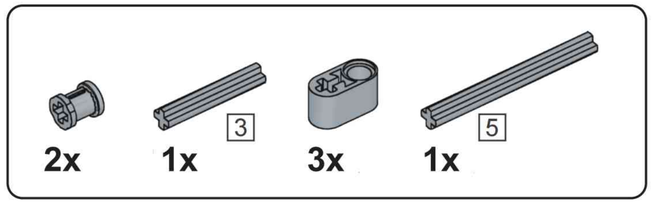

L5

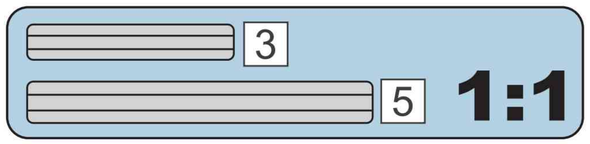

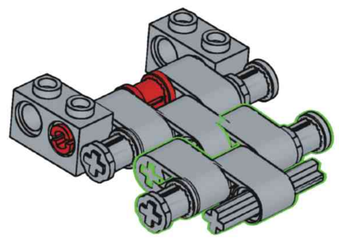

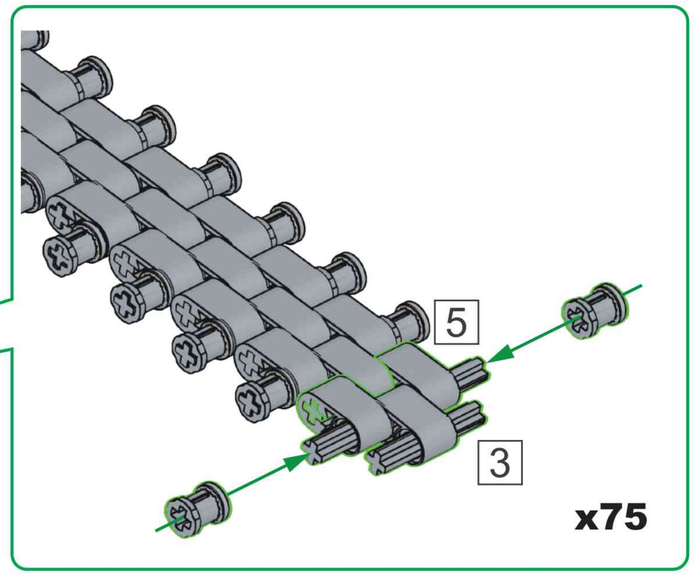

2

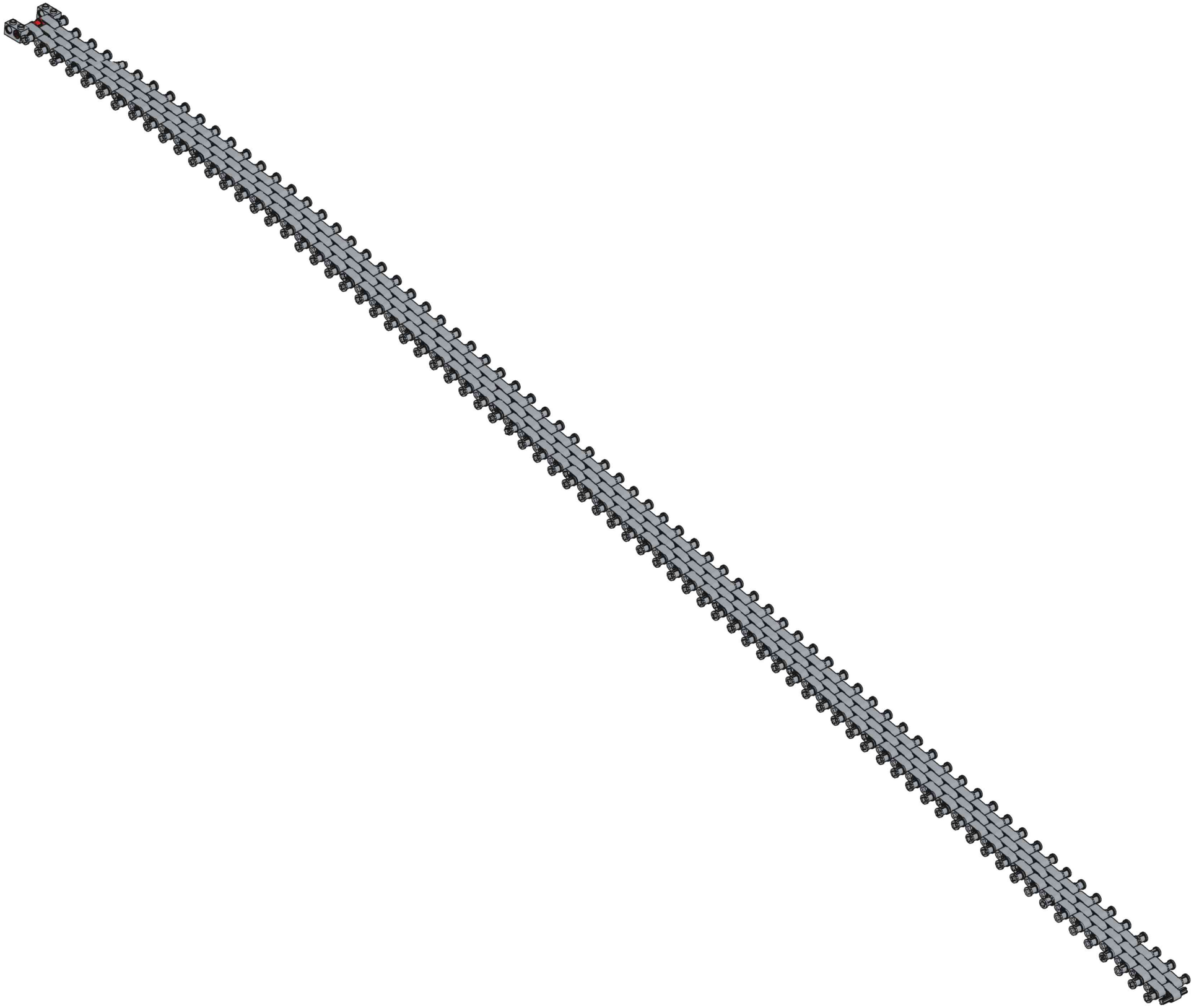

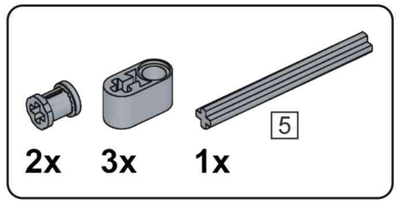

L6

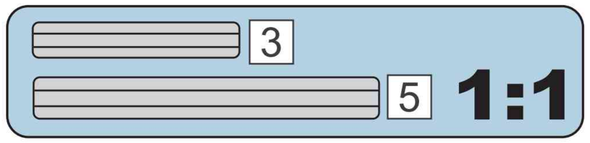

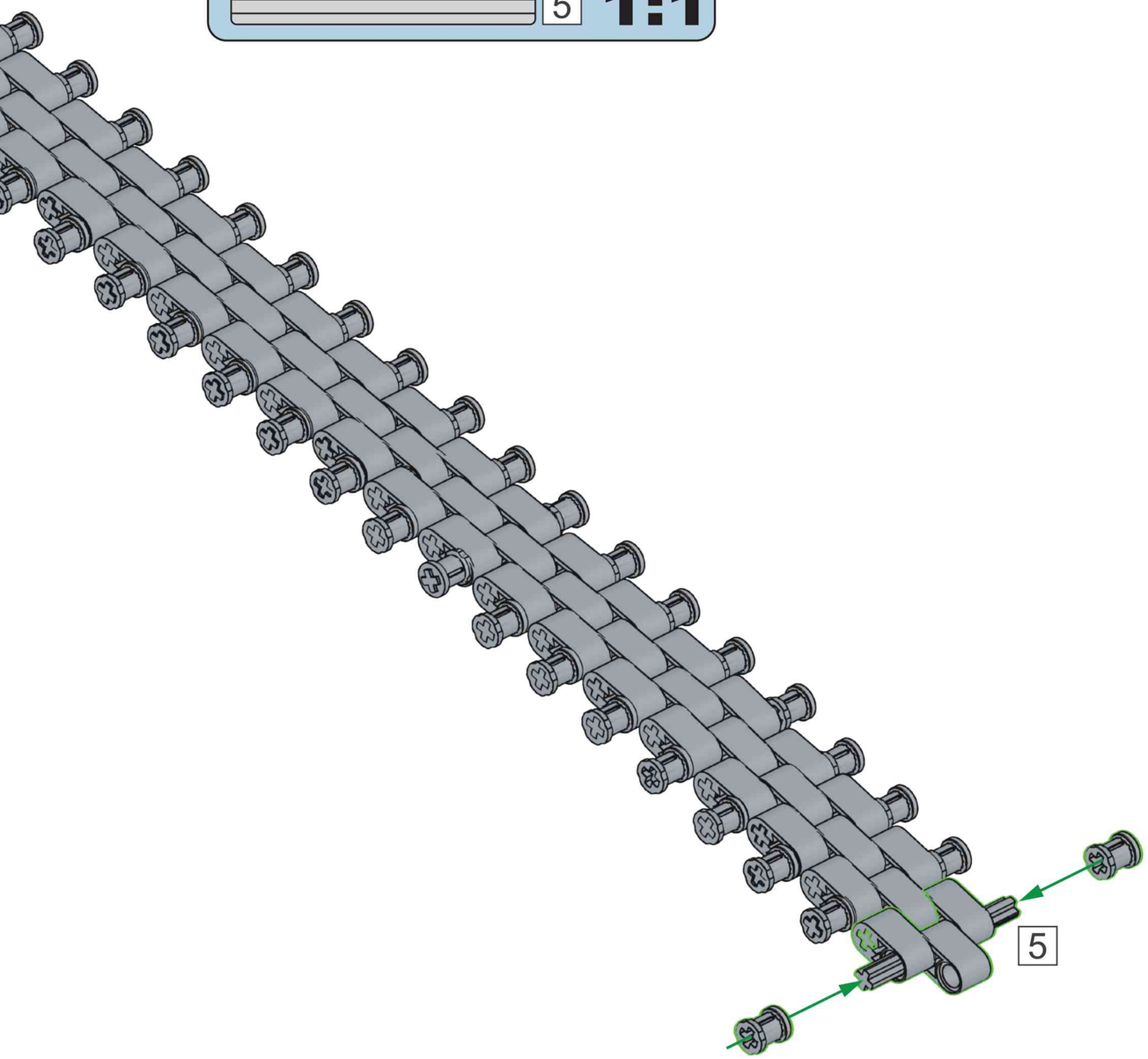

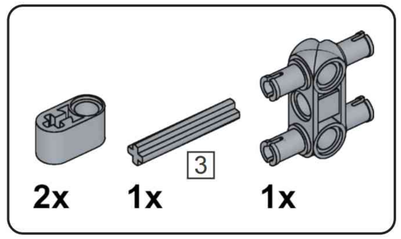

L7

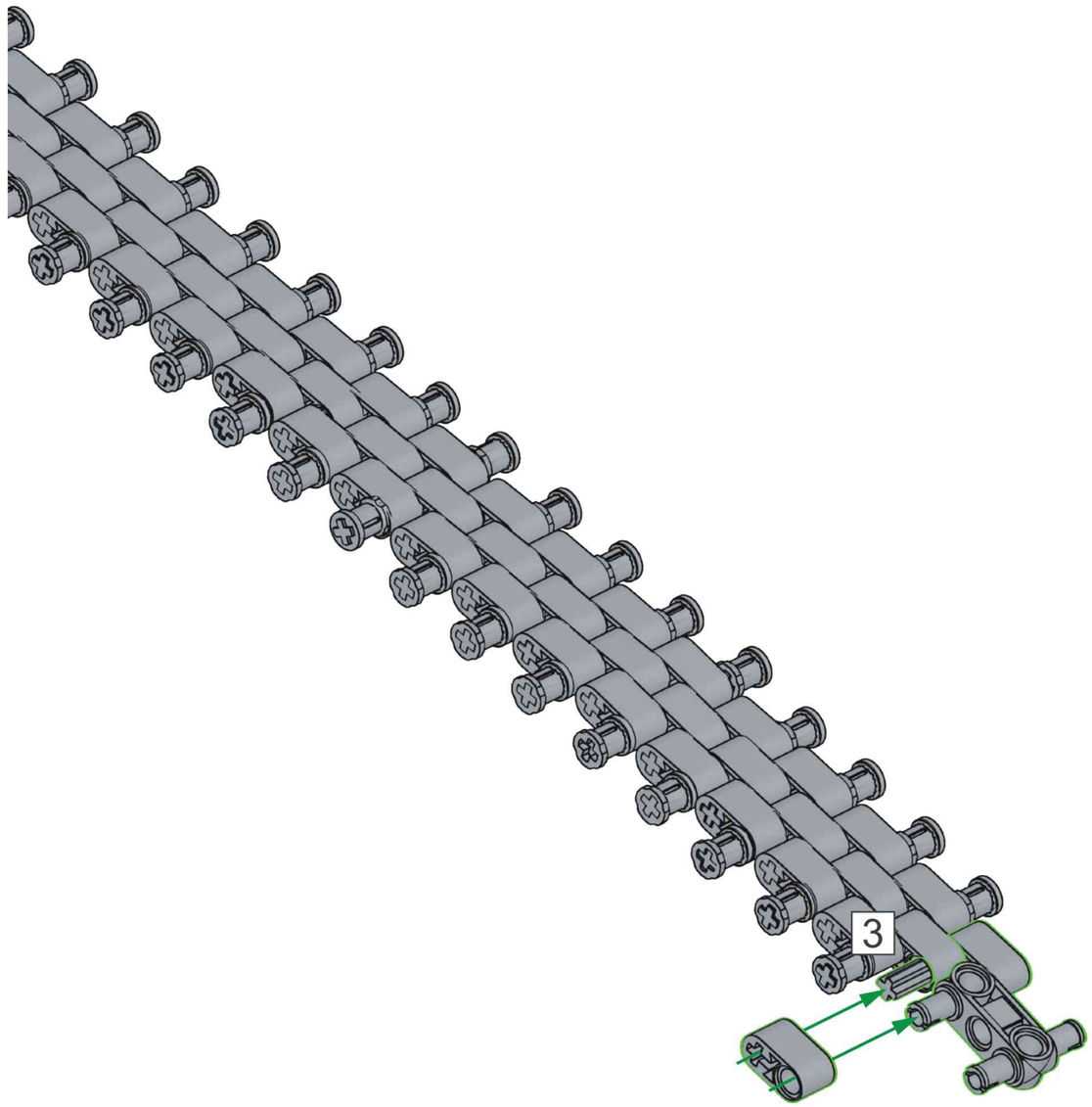

L8

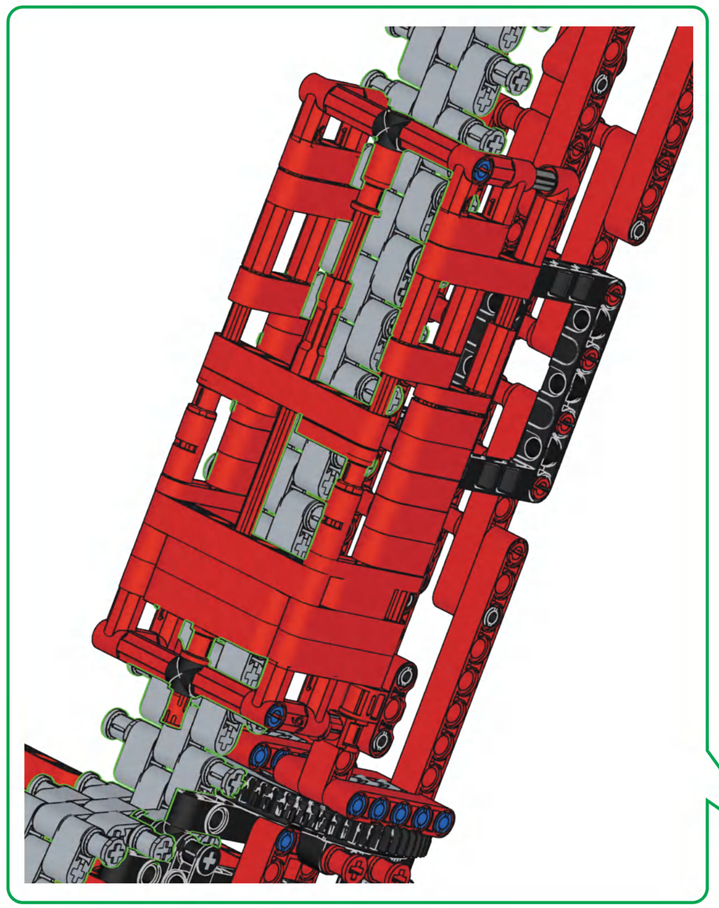

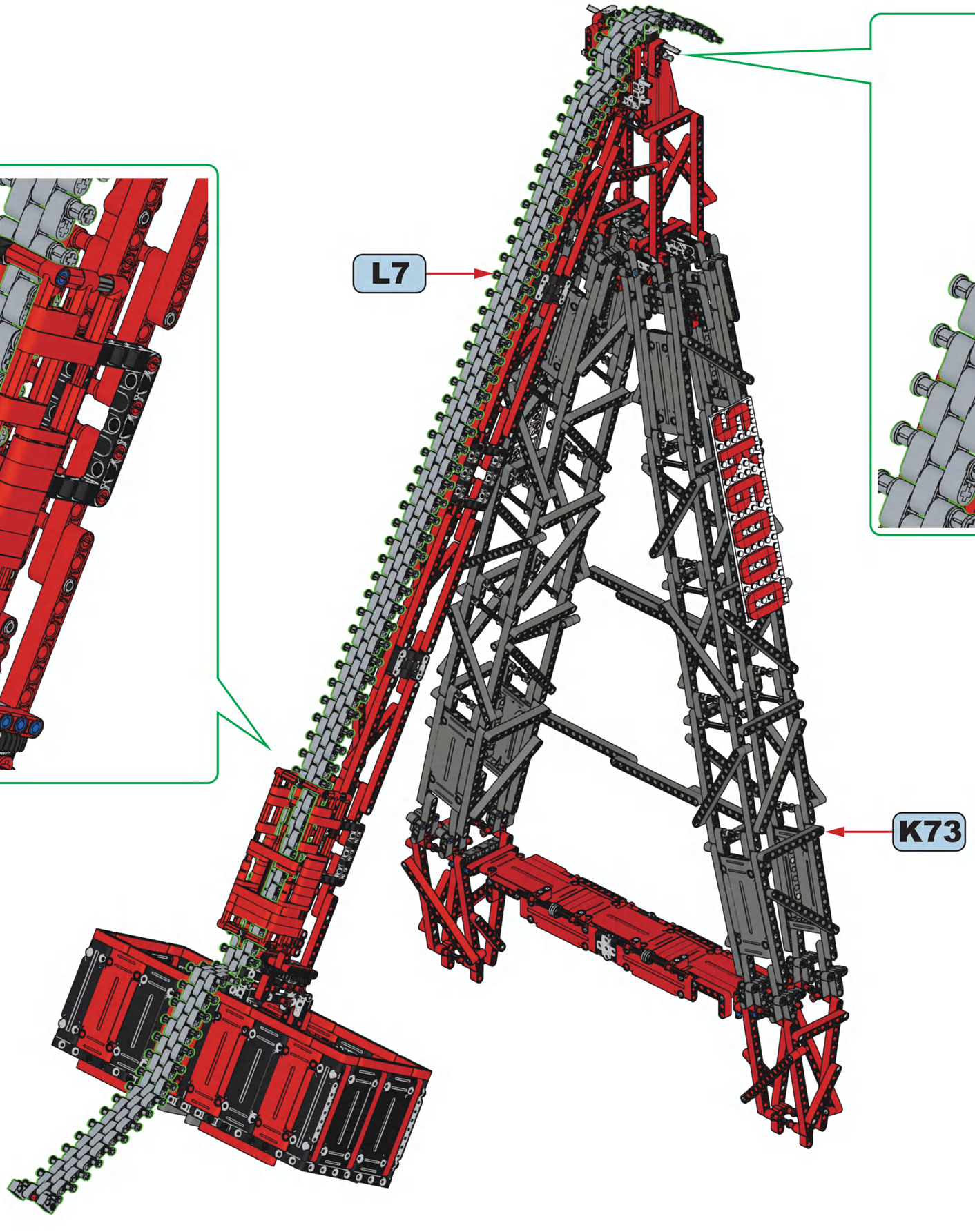

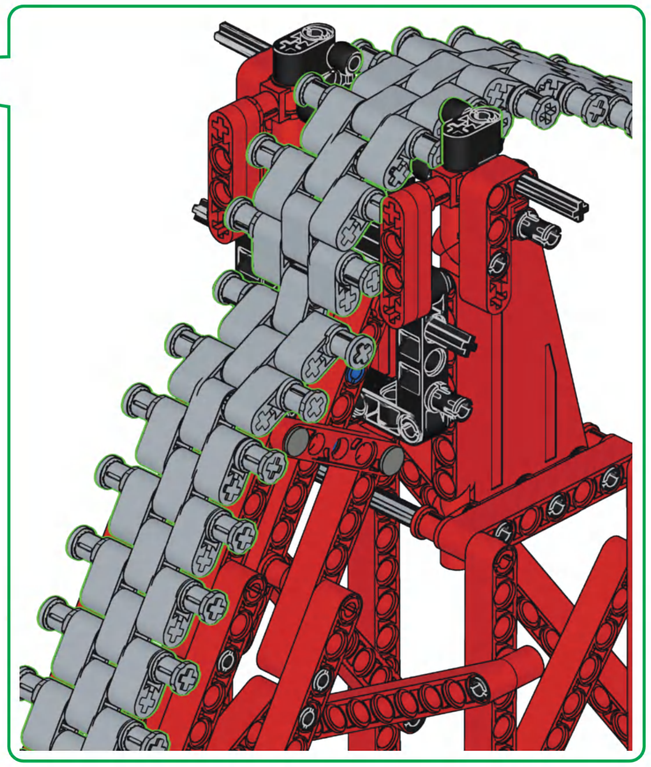

Reobrix

NO.22028

MECHANICAL

Sk6000

Reobrix

NO.22028

MECHANICAL SK6000

B

SK6000

R/C CONTROL+

01 2.4GHZ HIGH SPEED ELECTRIC REMOTE CONTROL

PHONE CONTROL+

13

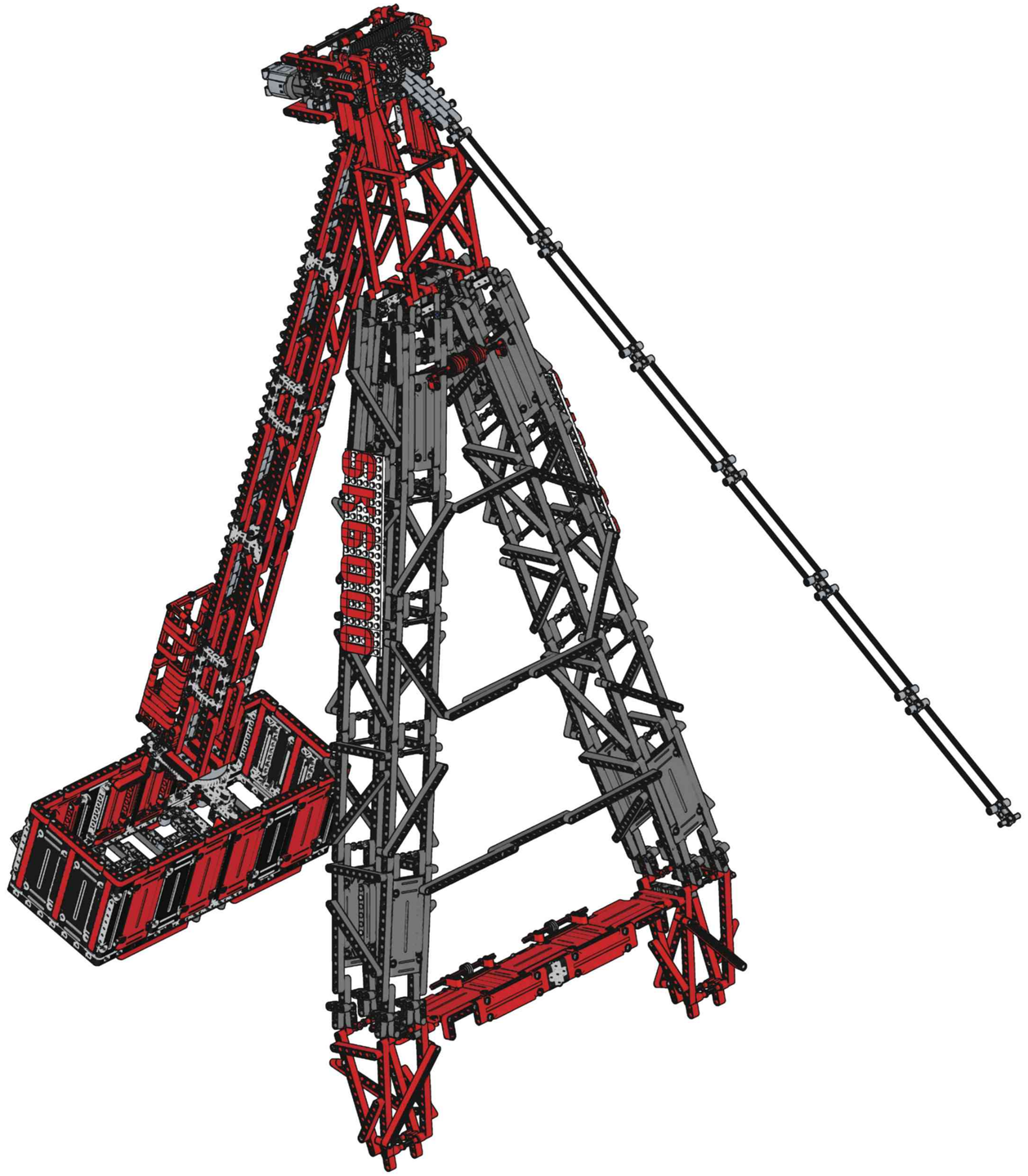

M

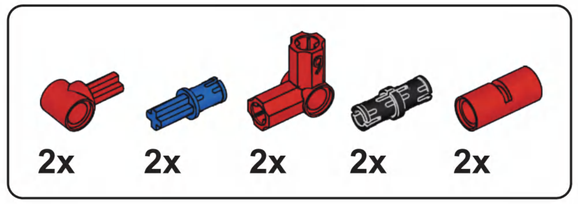

M1



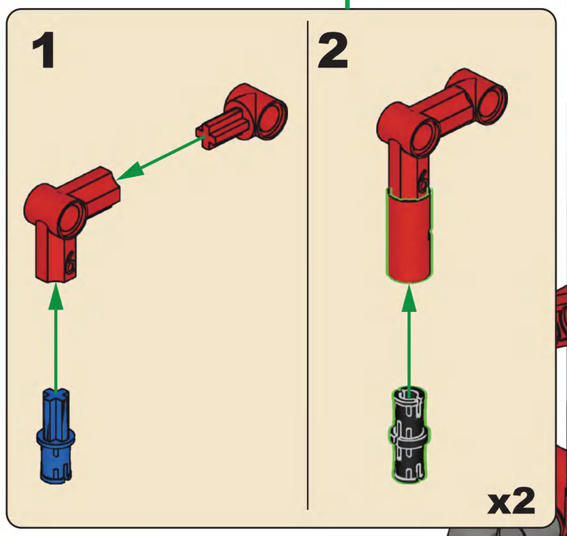

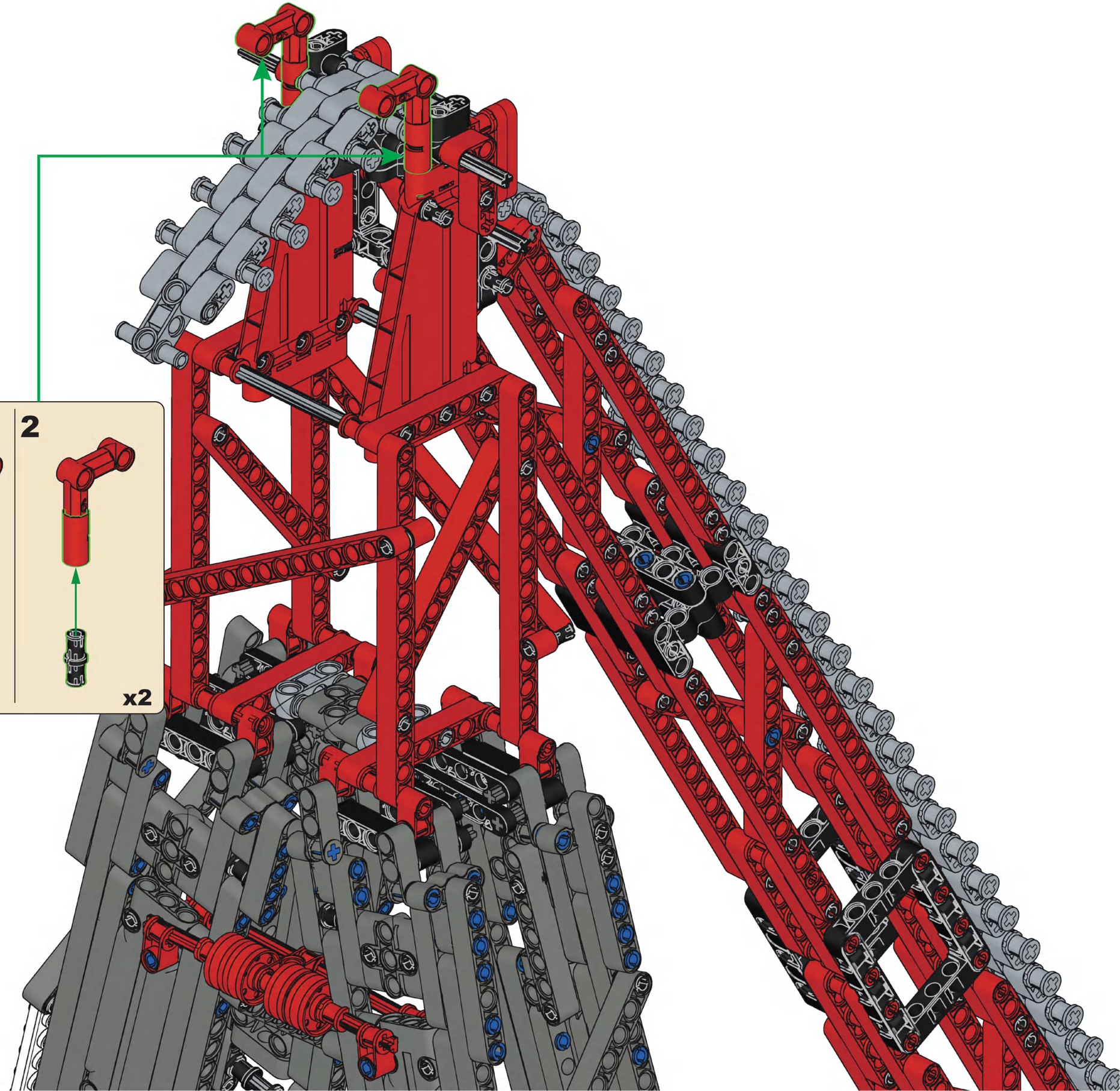

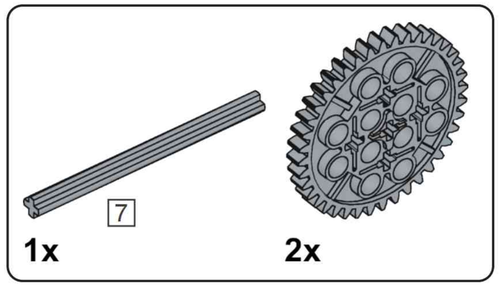

M2

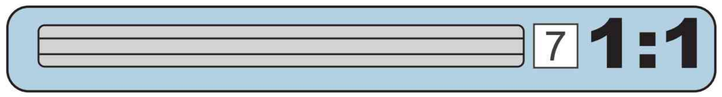

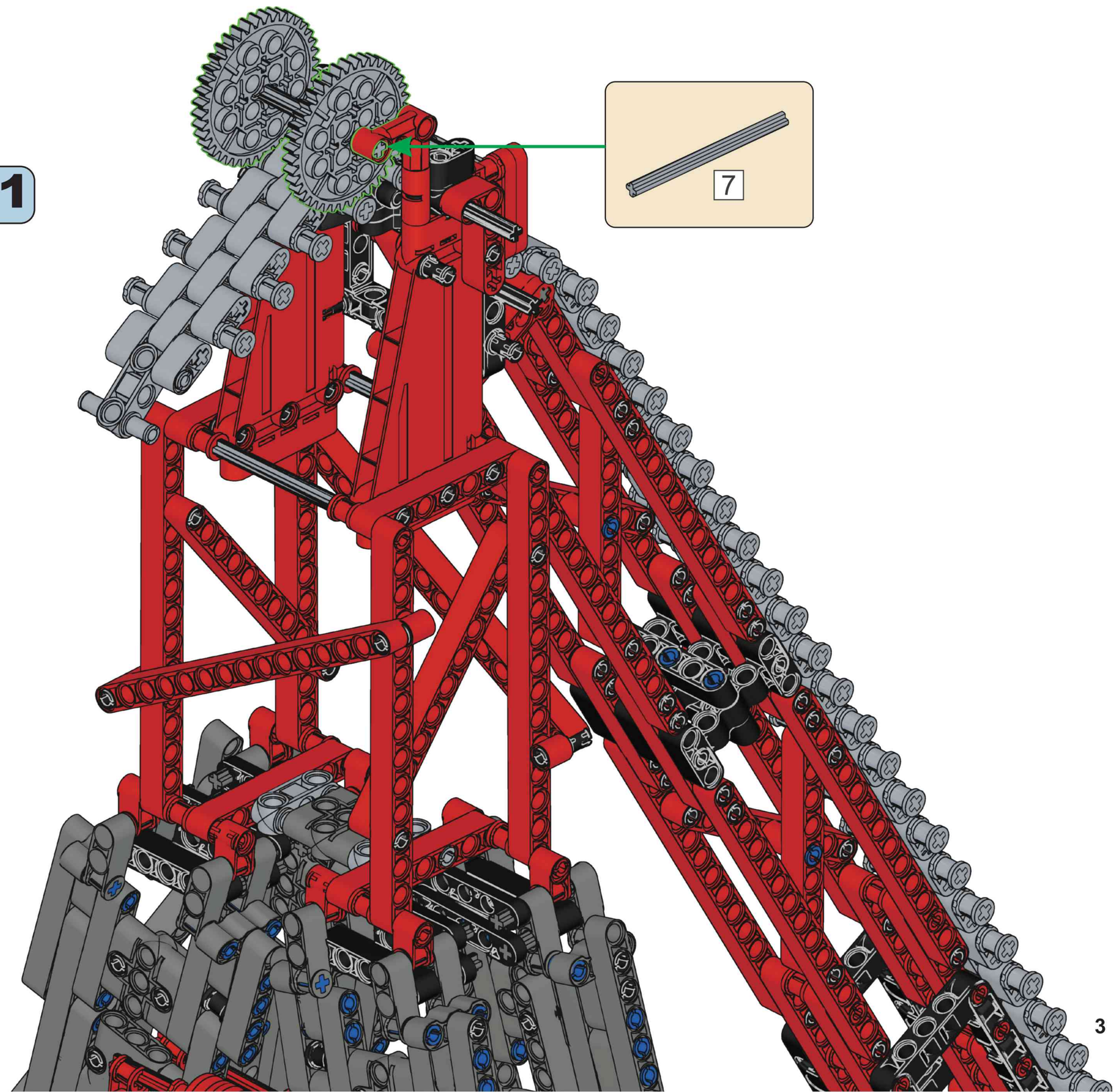

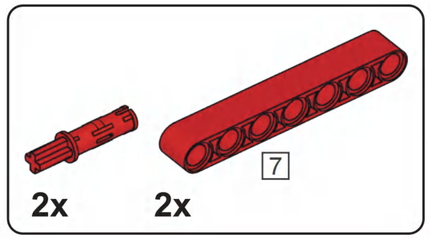

M3

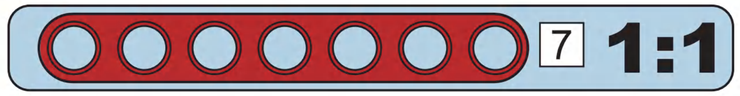

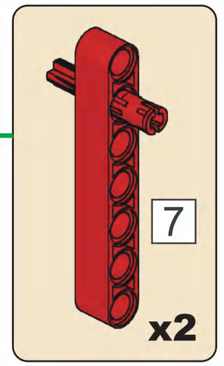

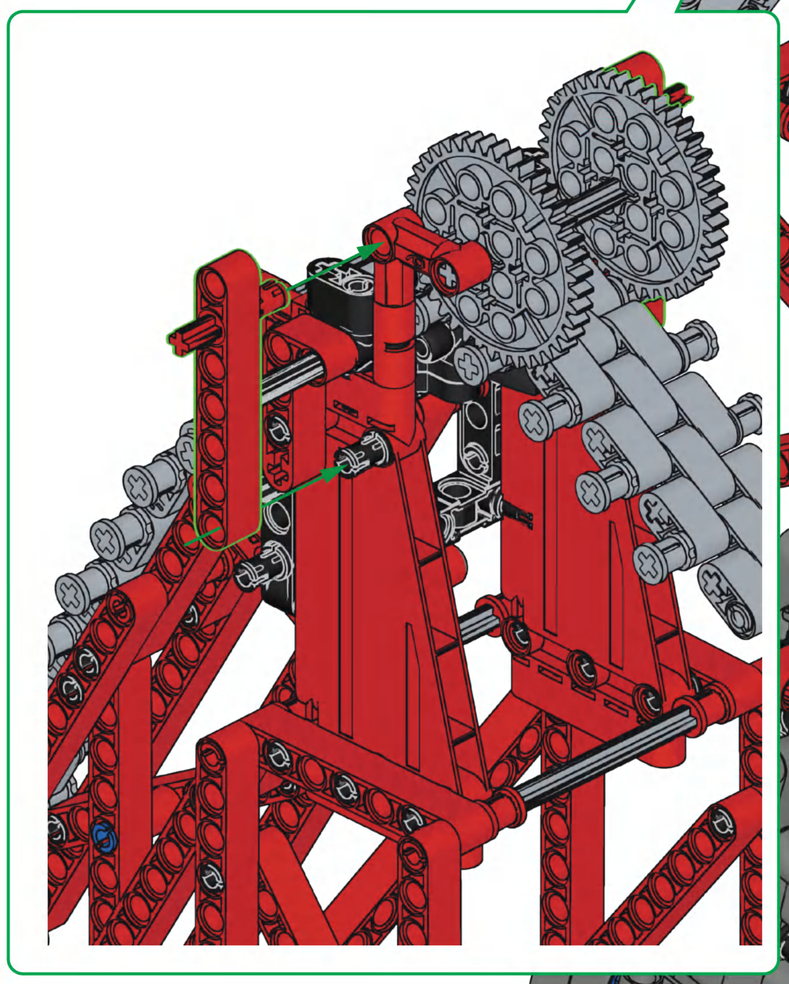



2x

M4

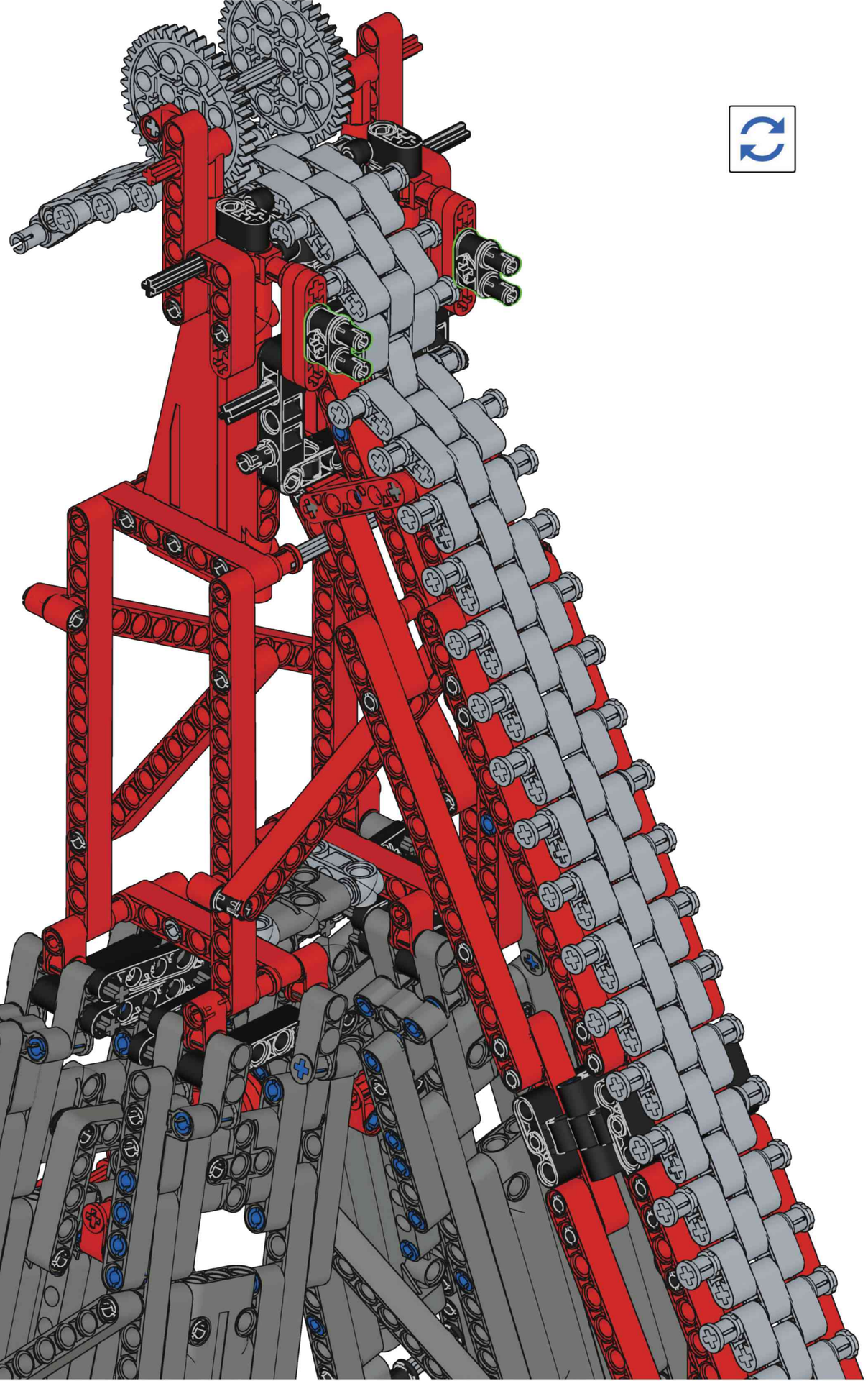

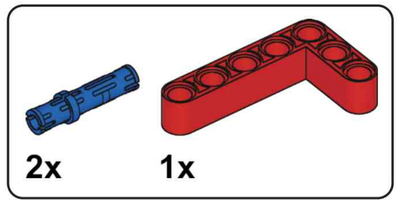

M5

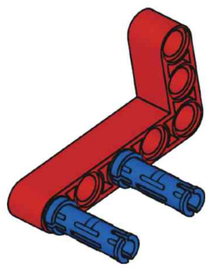

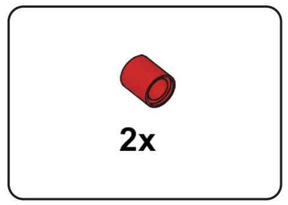

M6

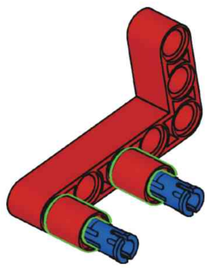

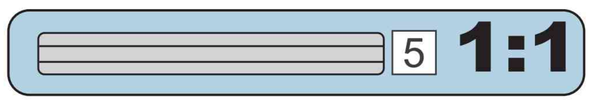

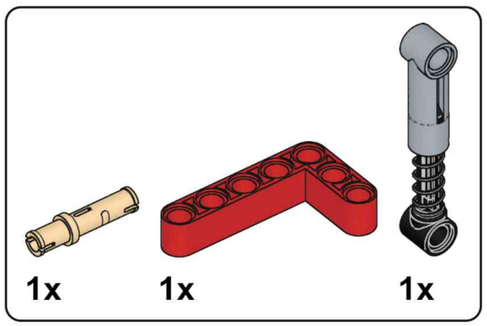

M7

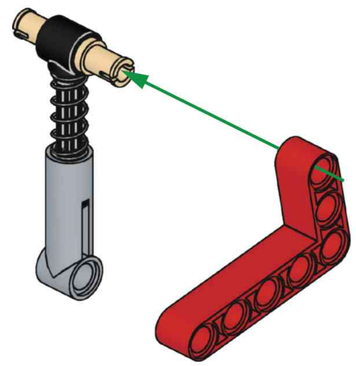

M8

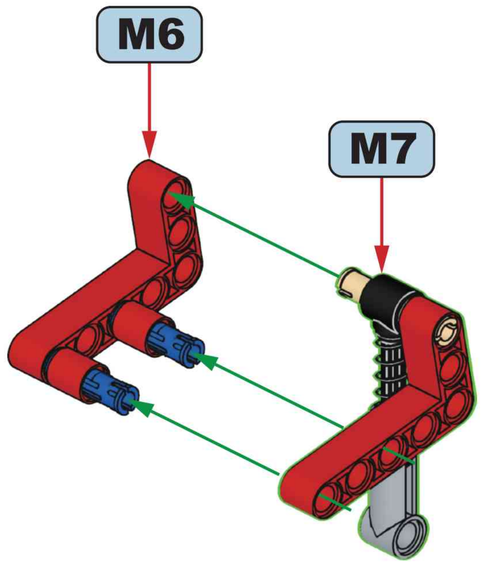

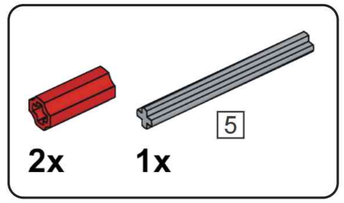

M9

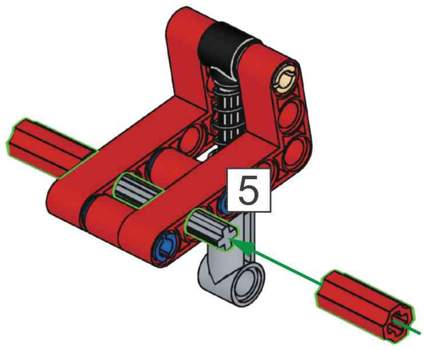

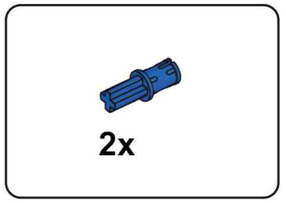

M10

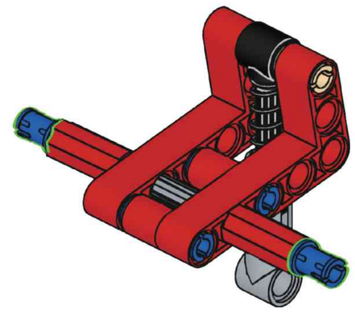

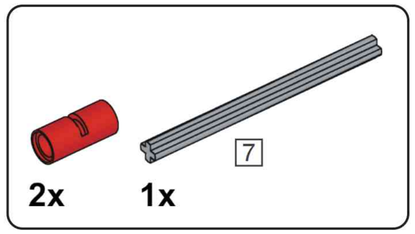

M11

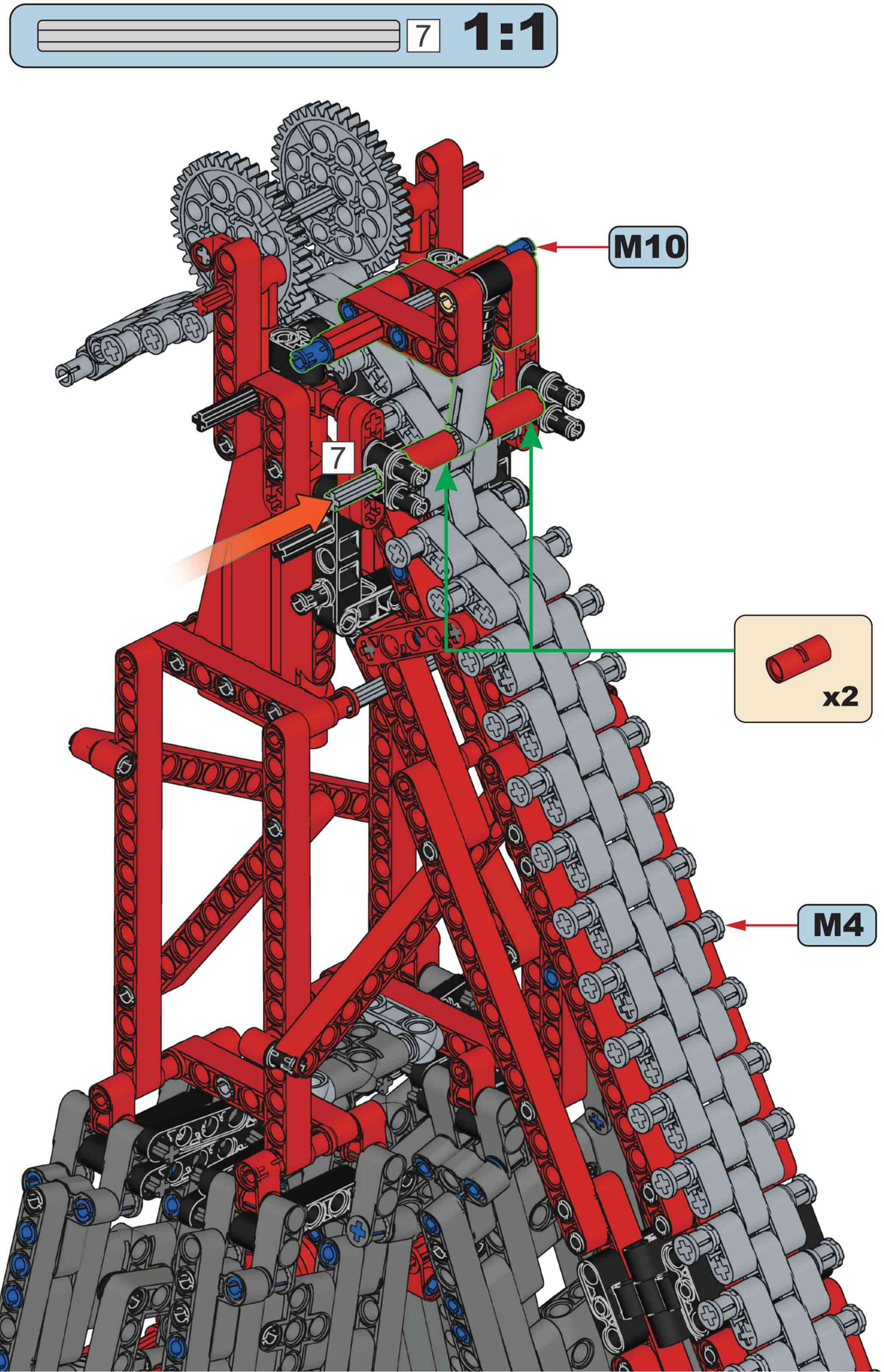

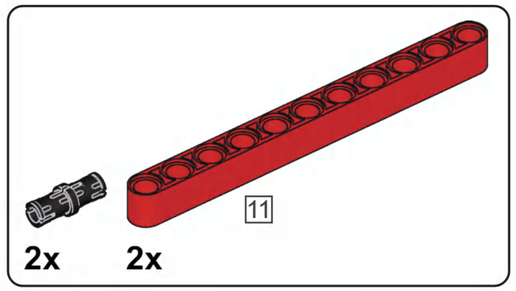

M12

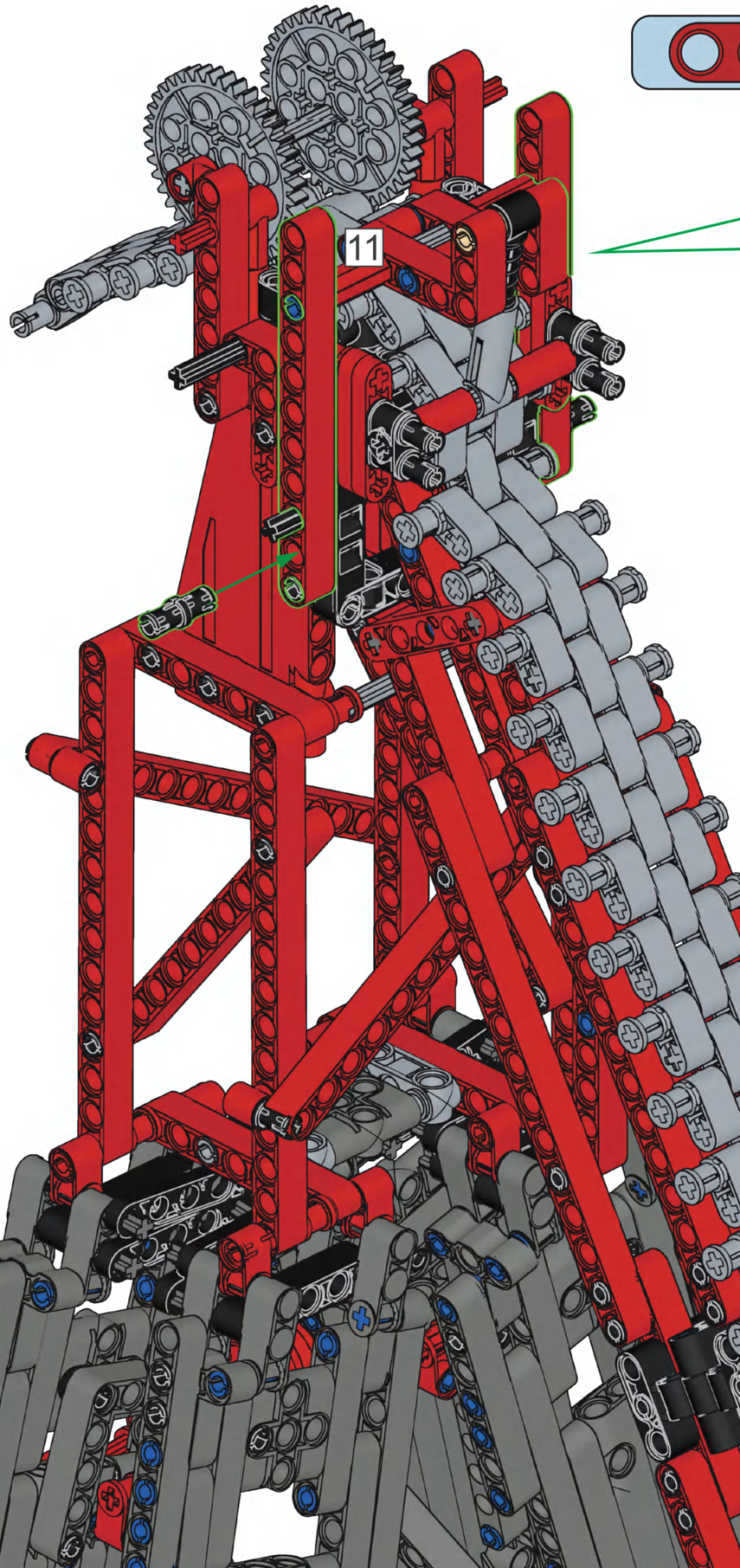

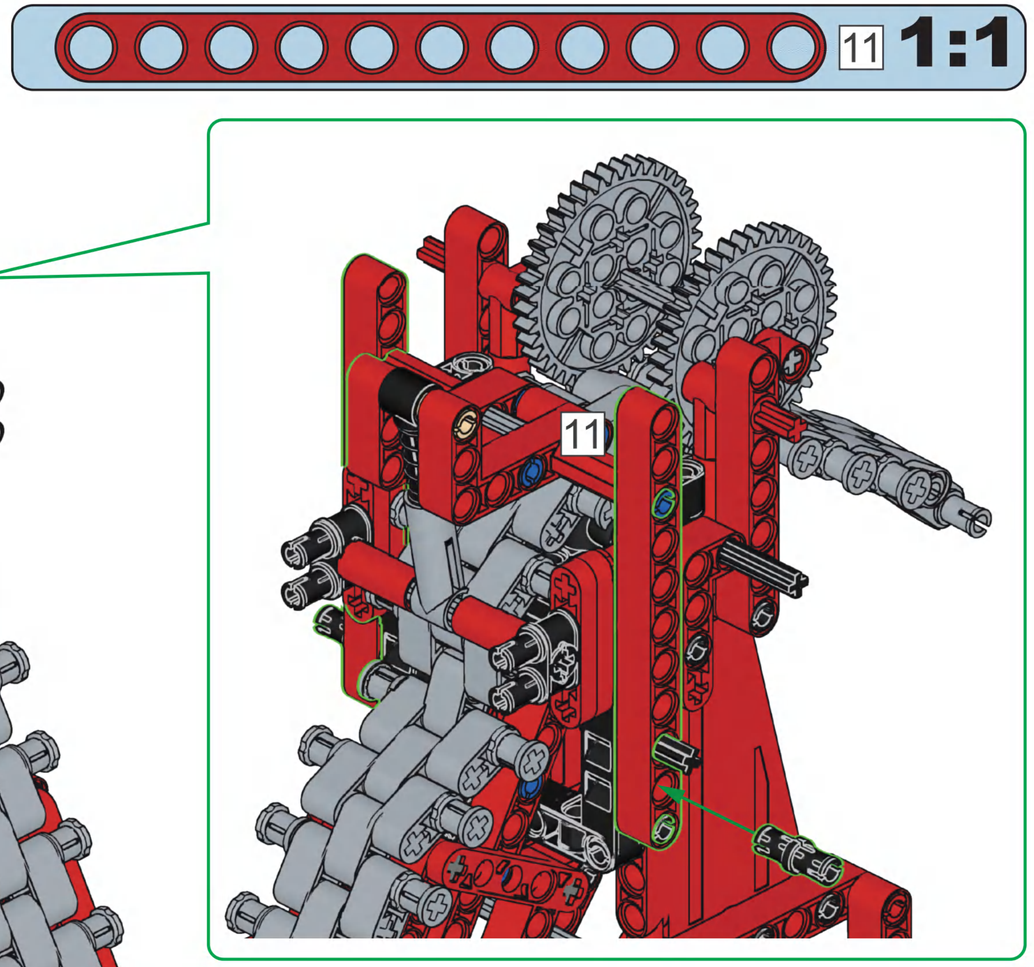

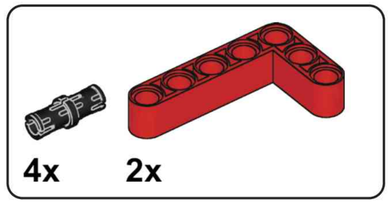

M13

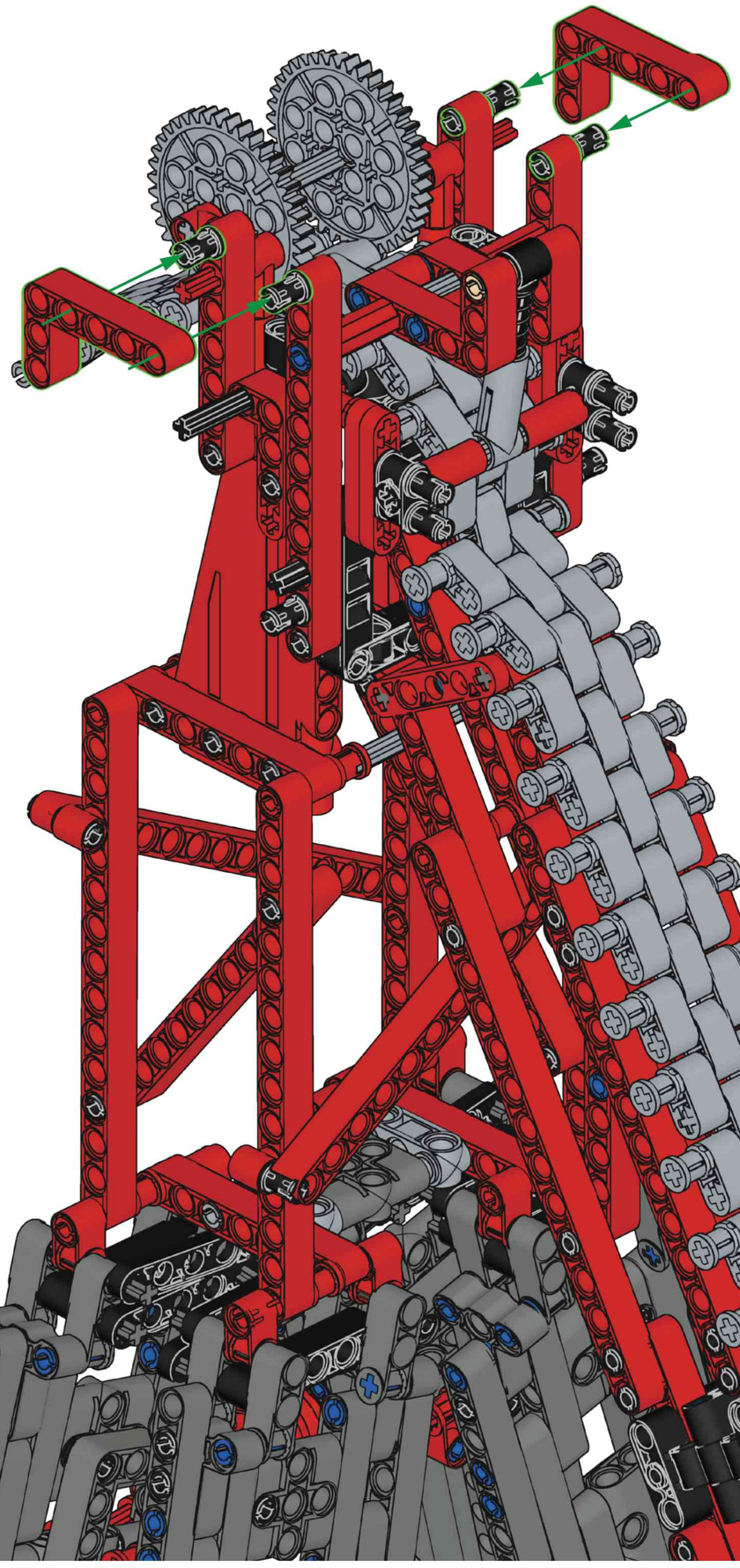

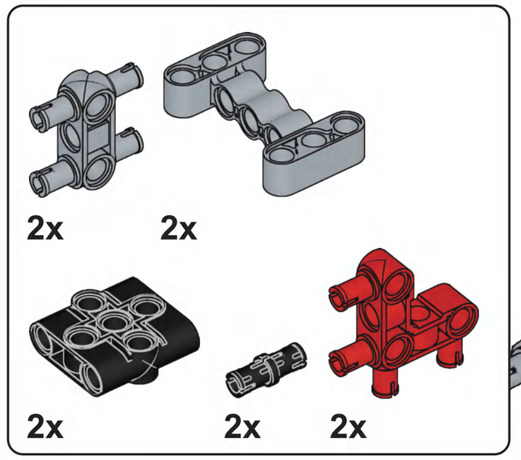

M14

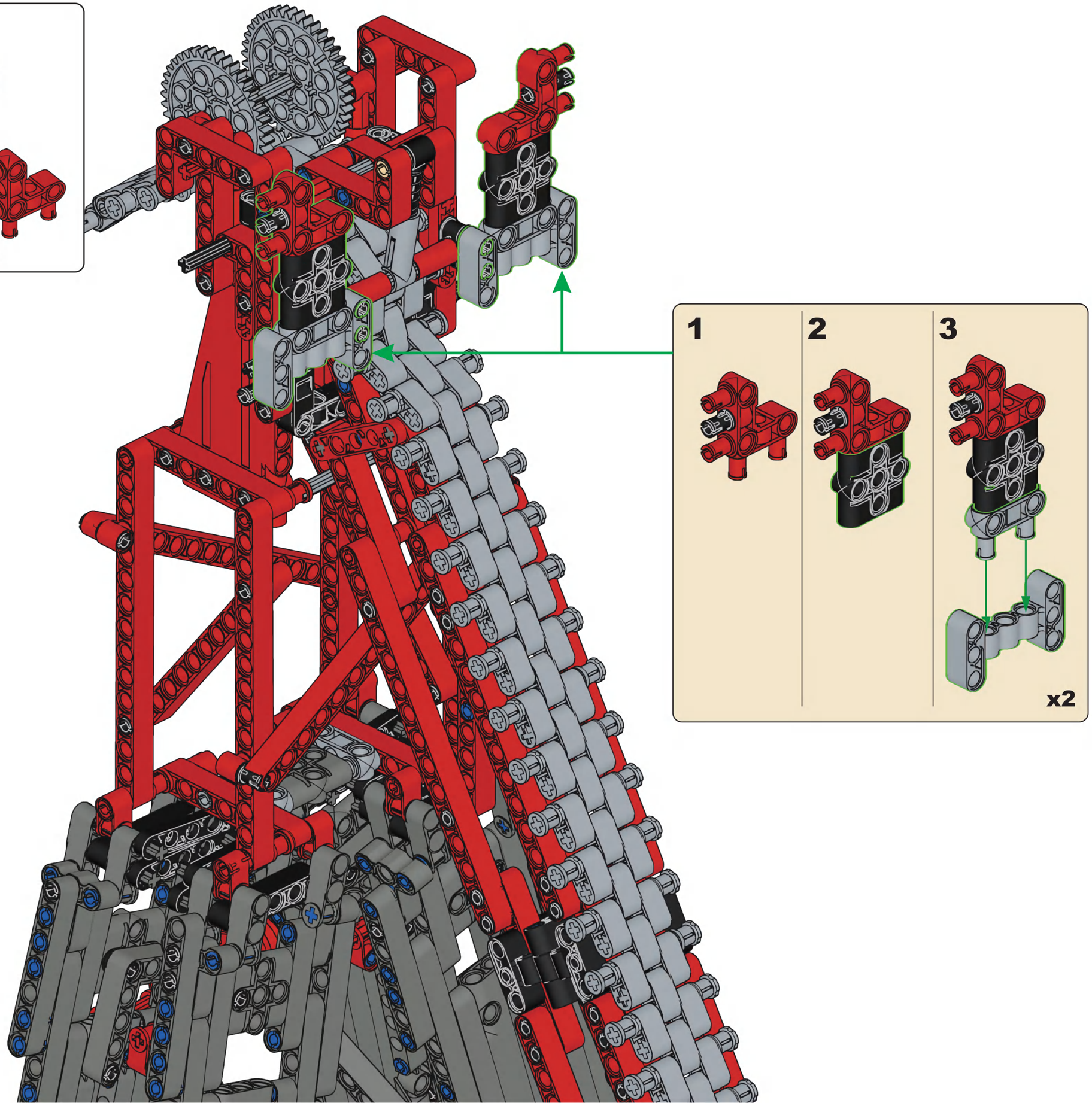

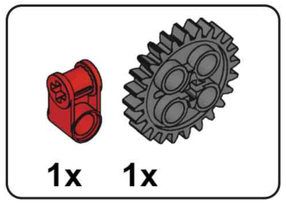

M15

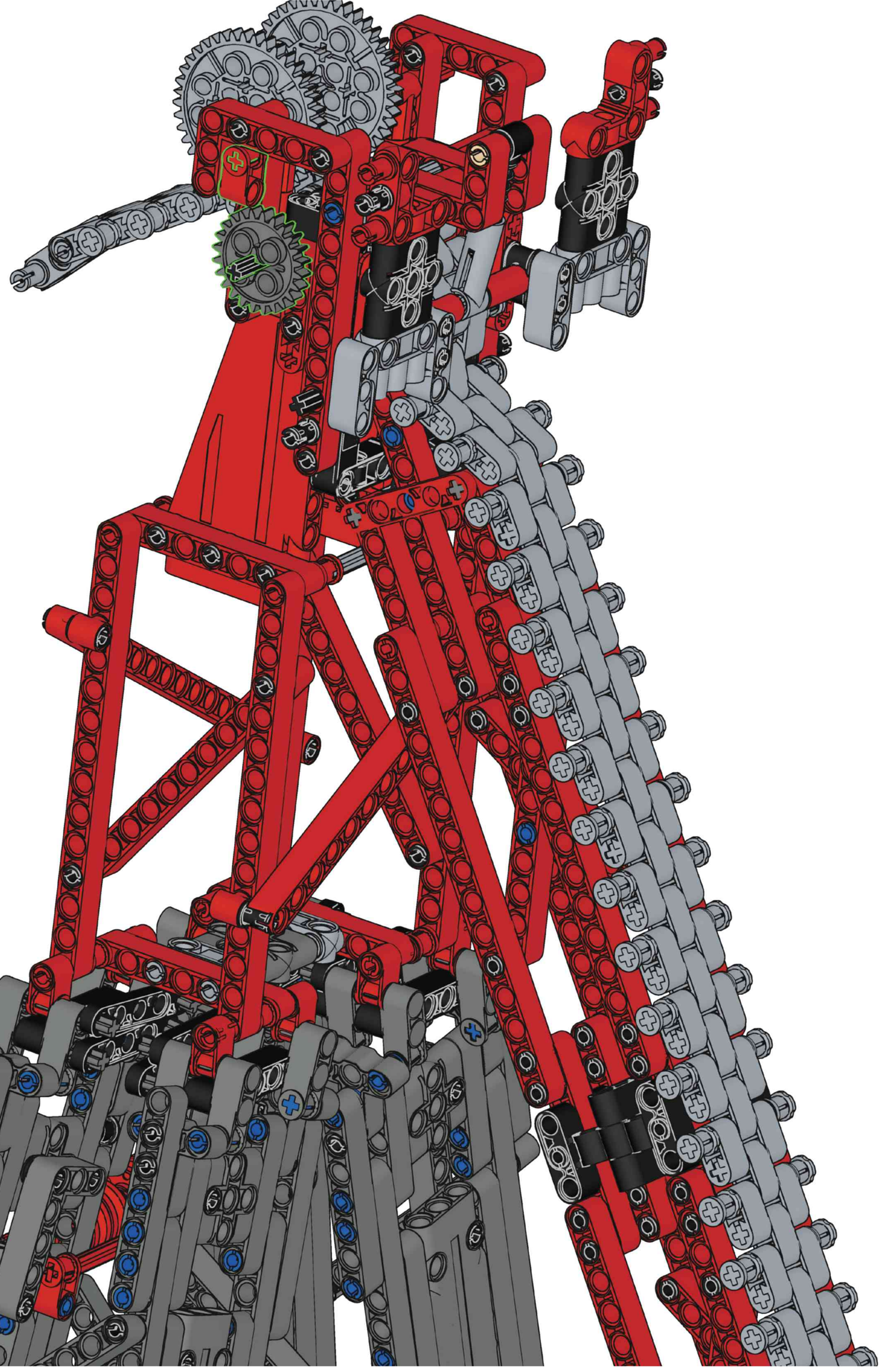

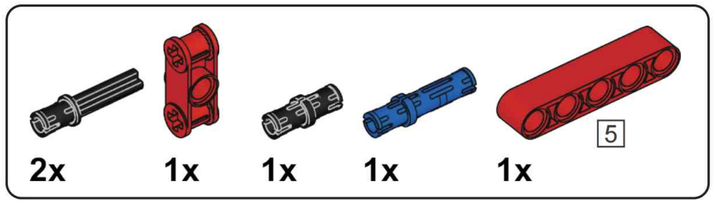

M16

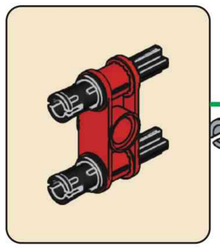

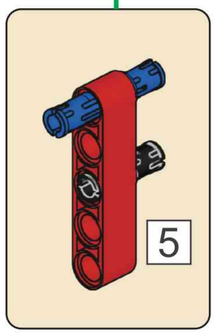

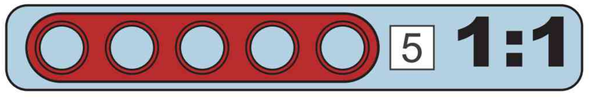

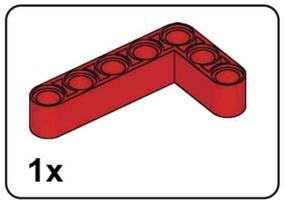

M17

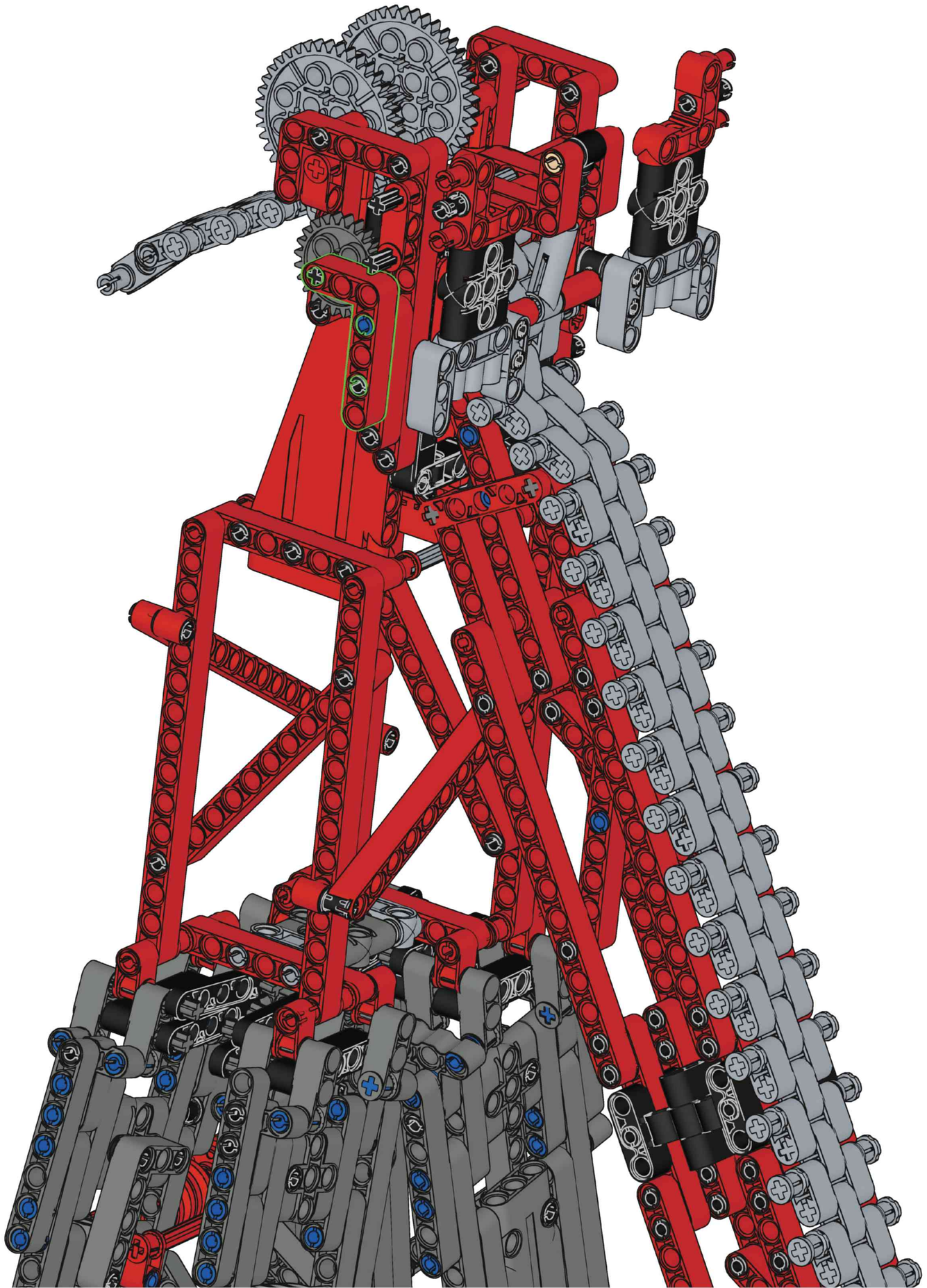

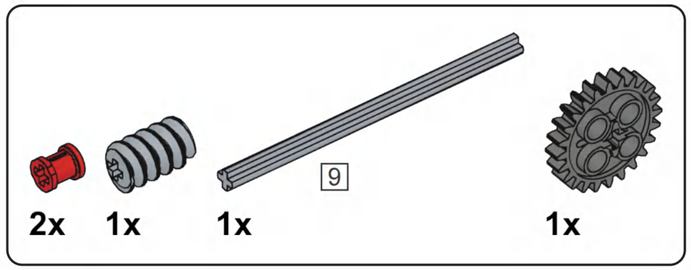

M18

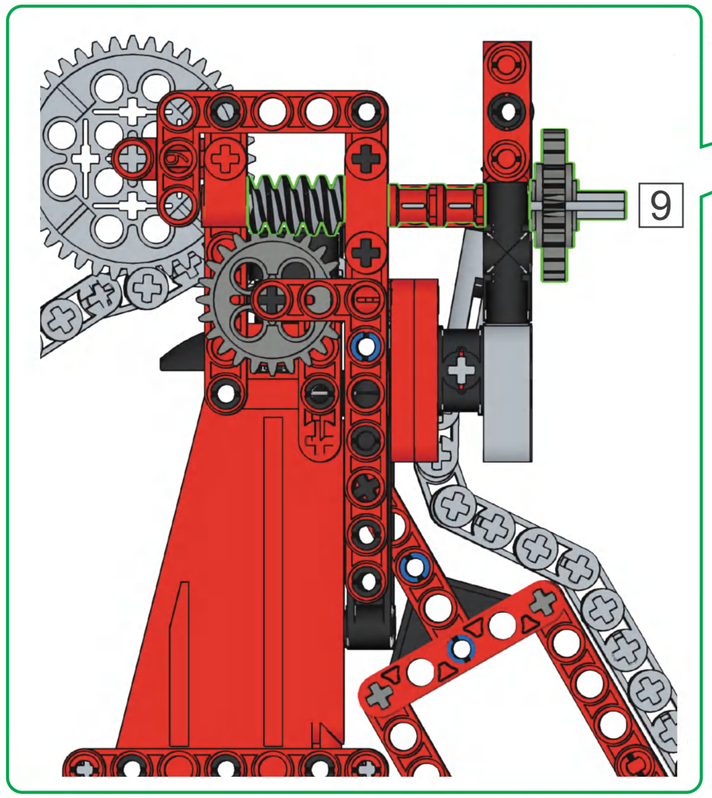

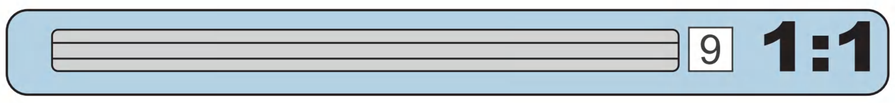

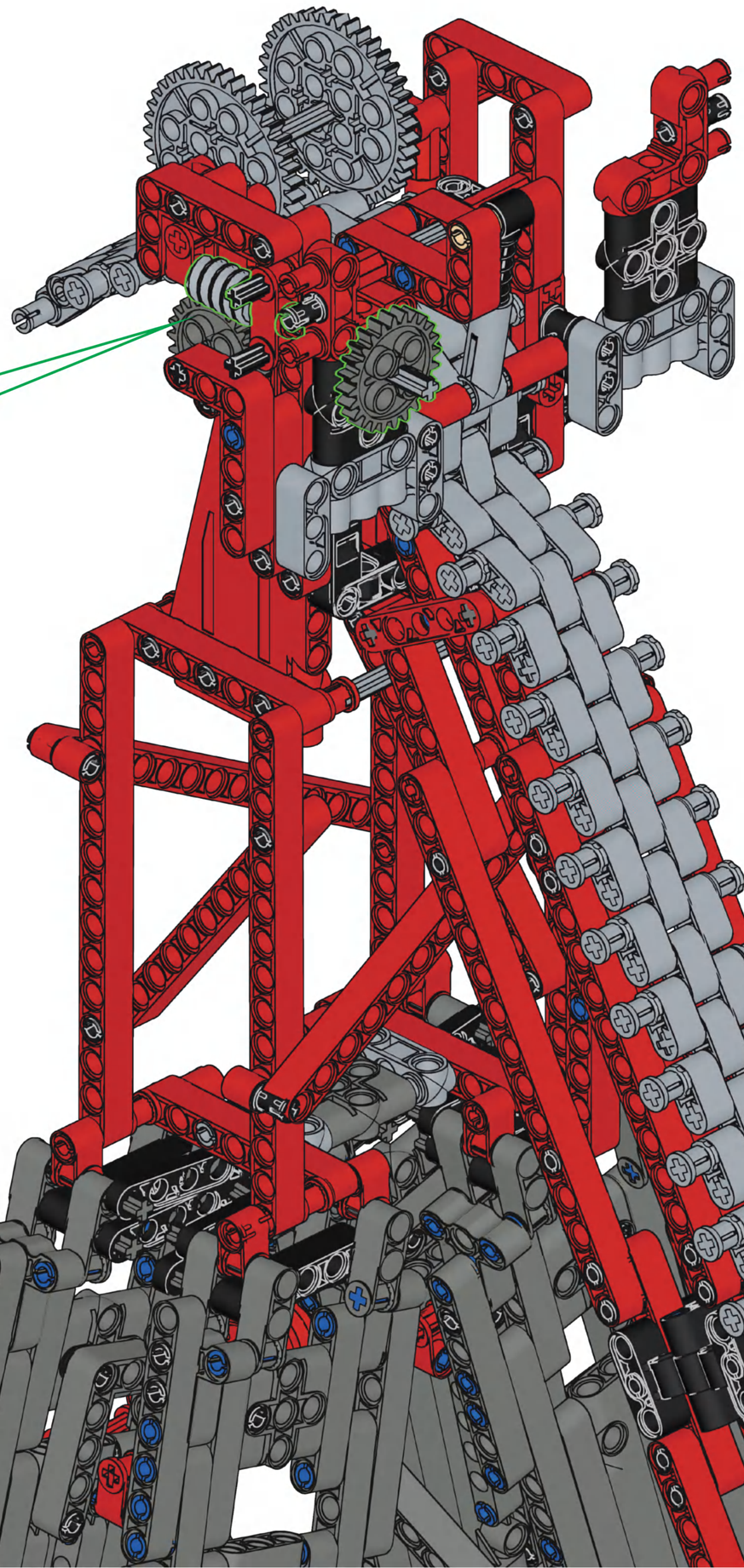

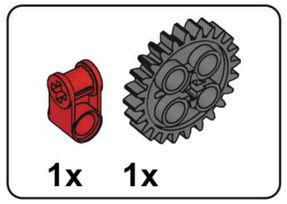

M19



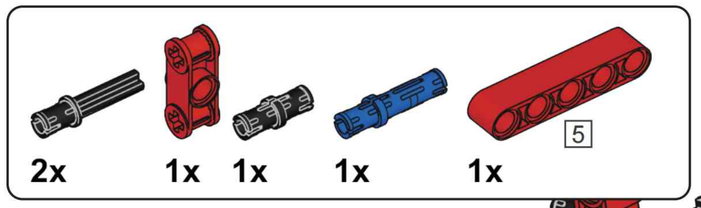

M20

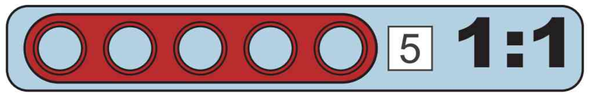

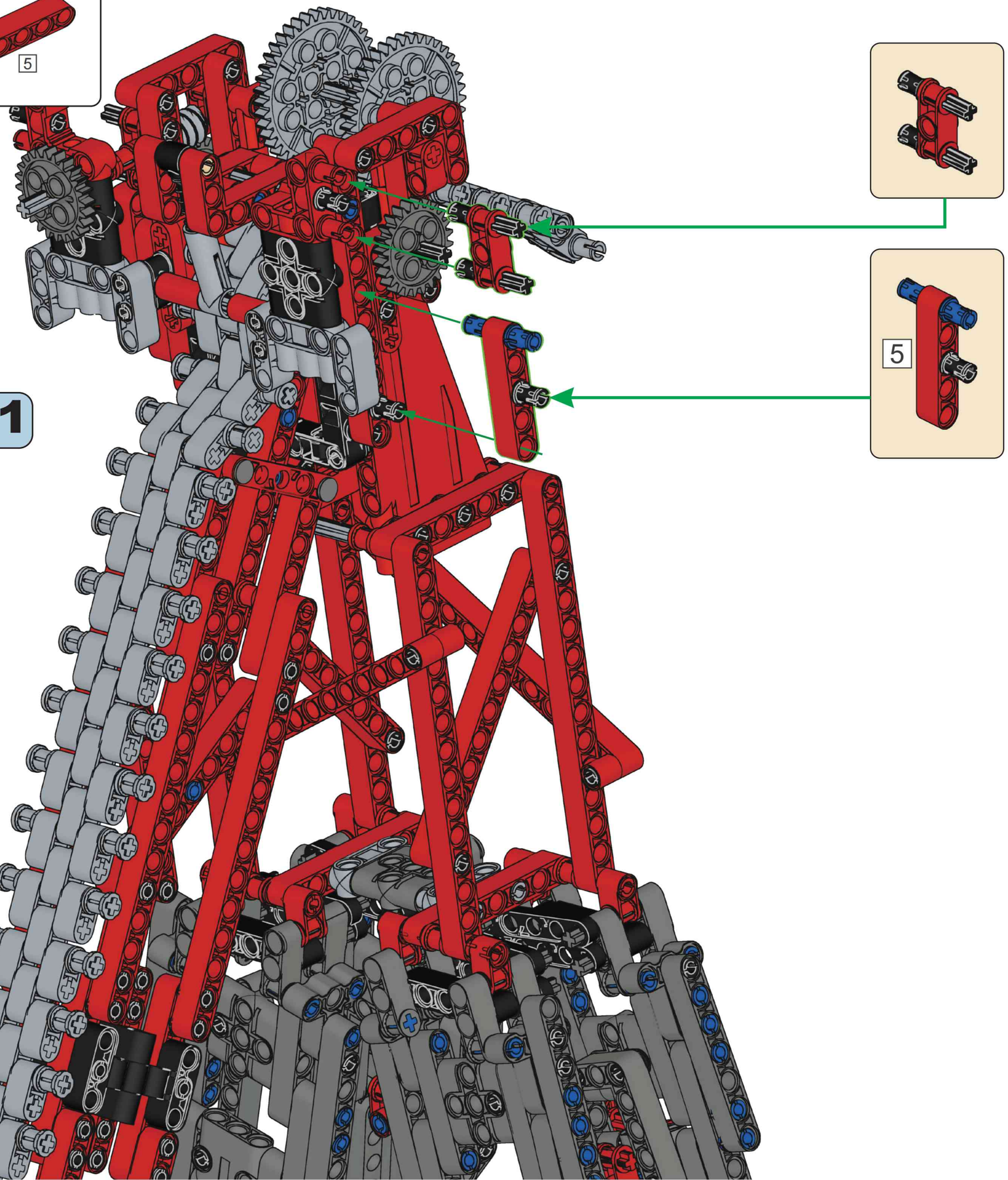

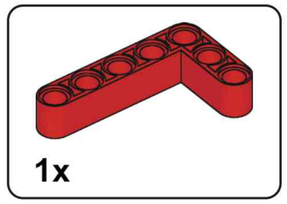

M21

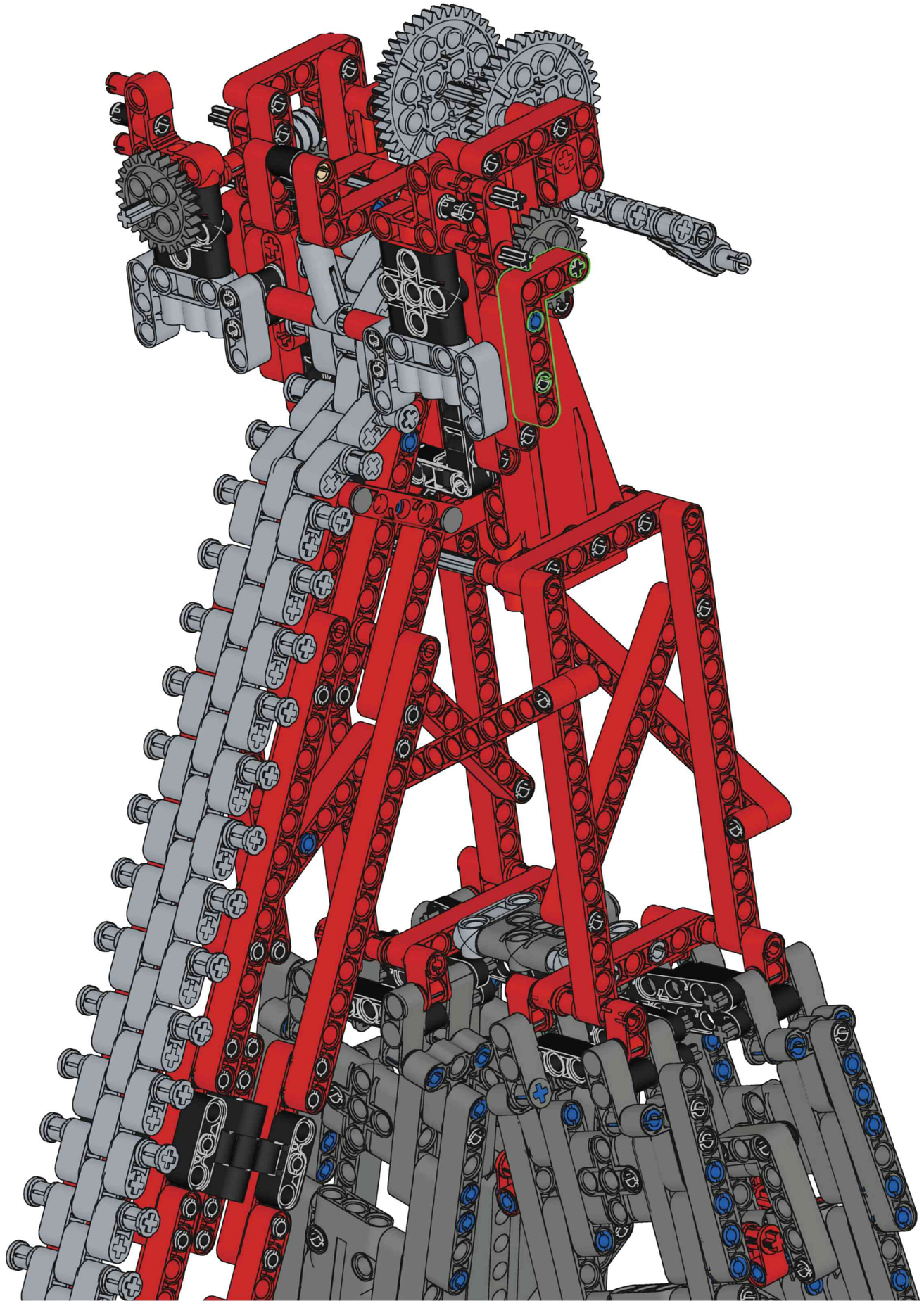

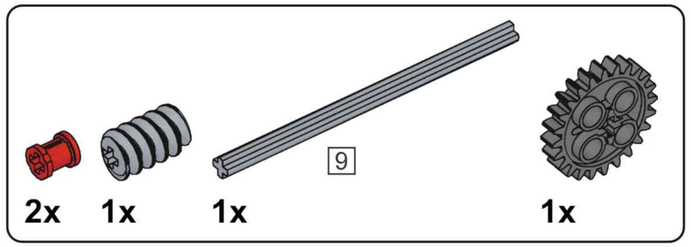

M22

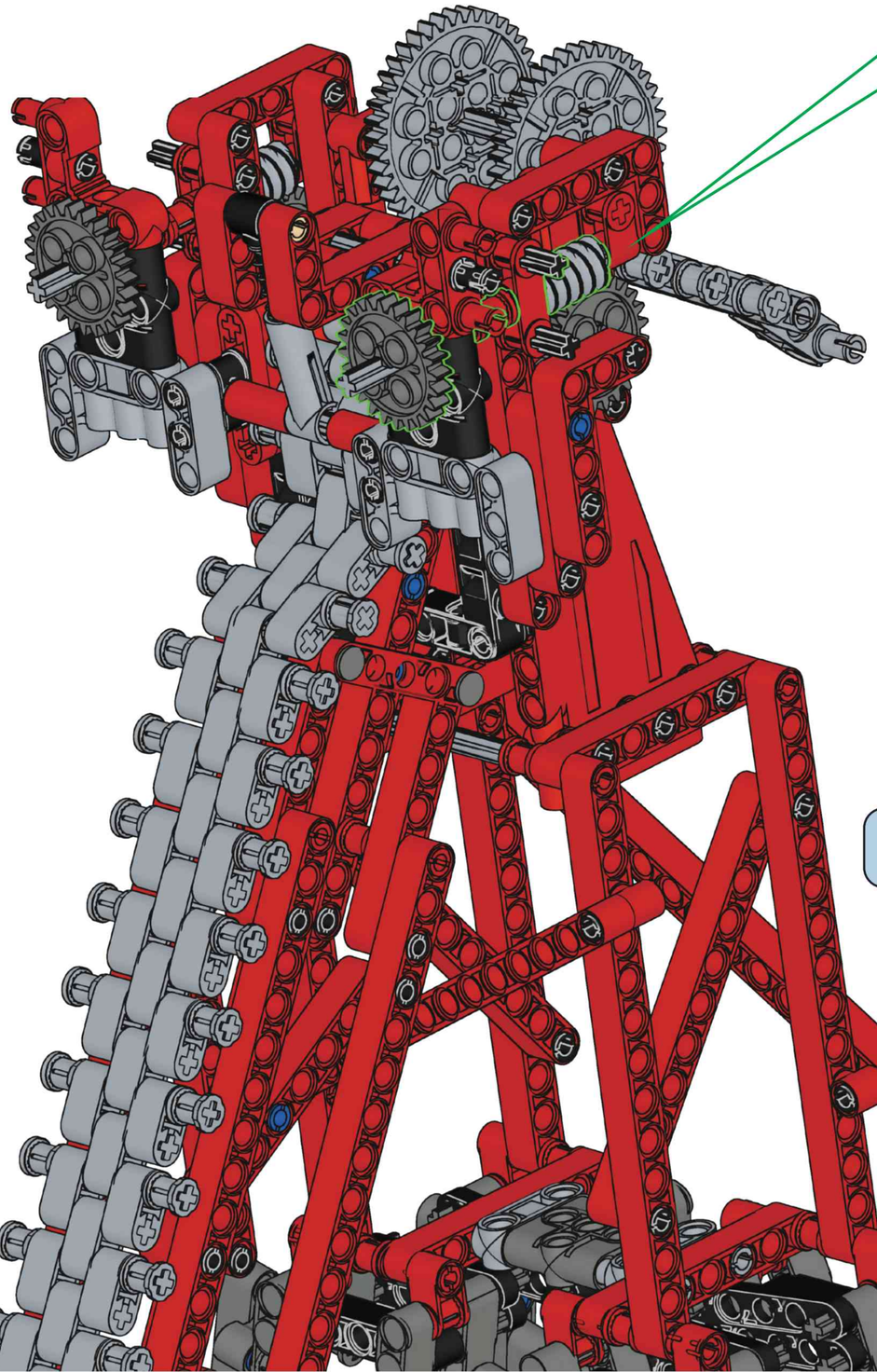

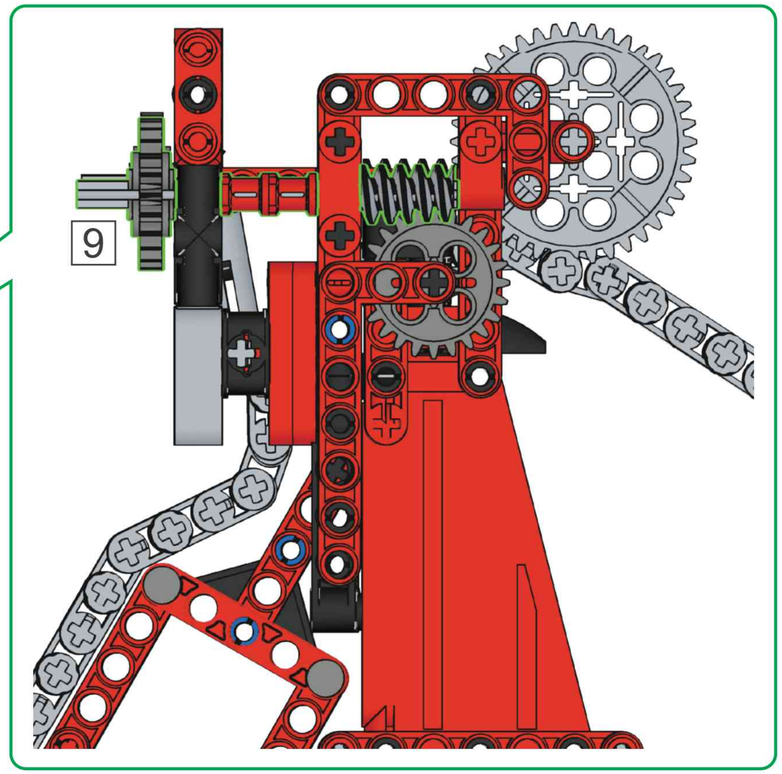

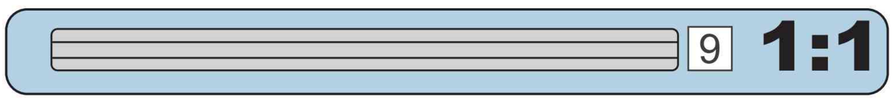

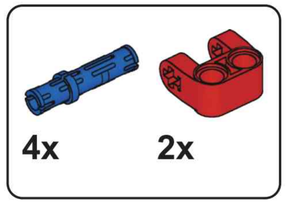

M23

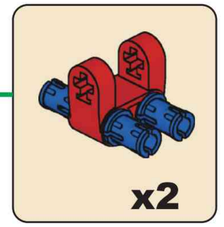

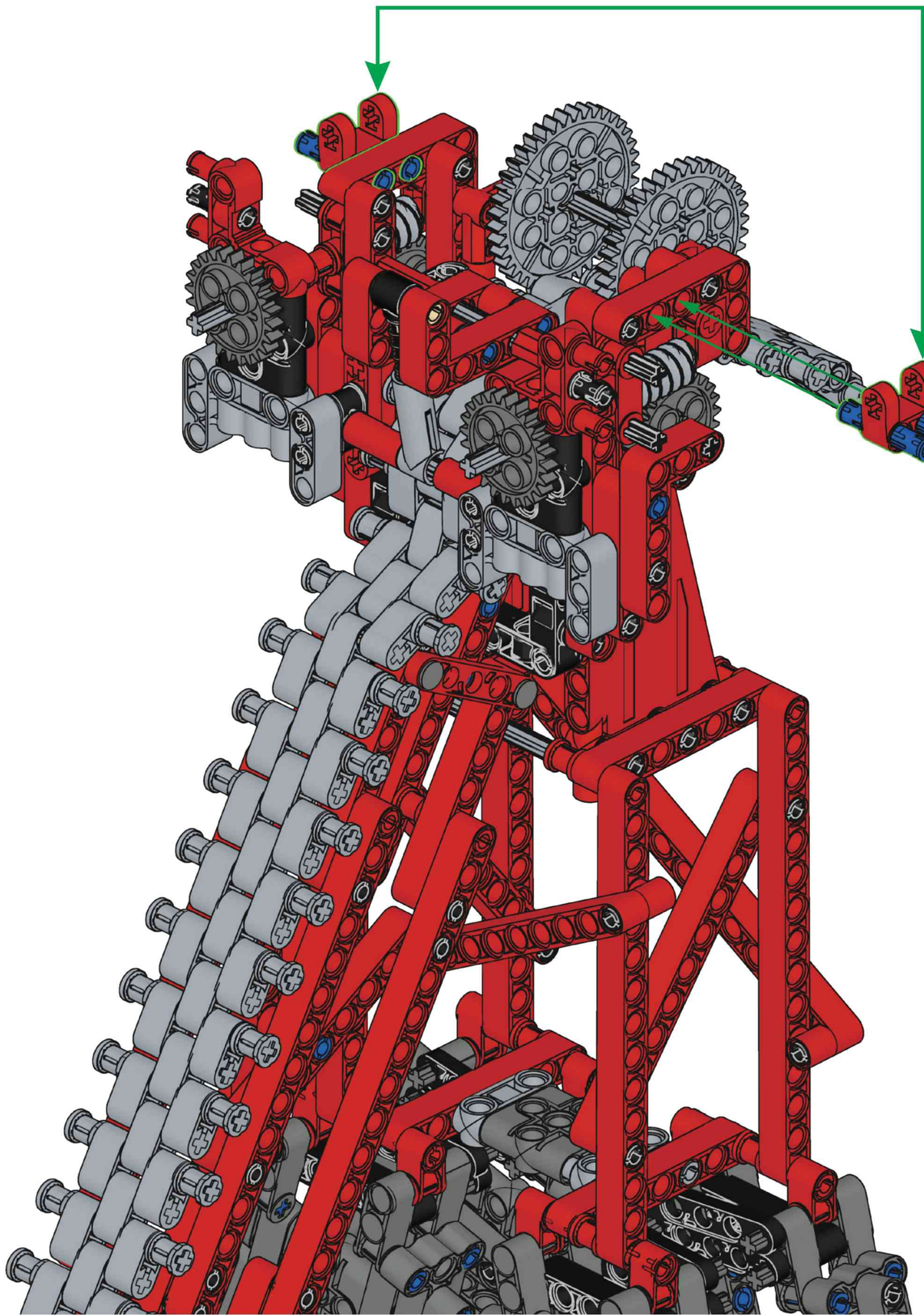

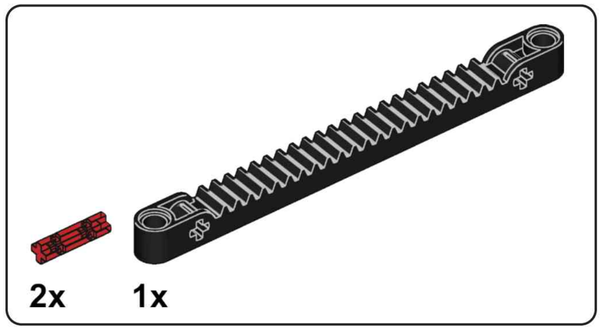

M24

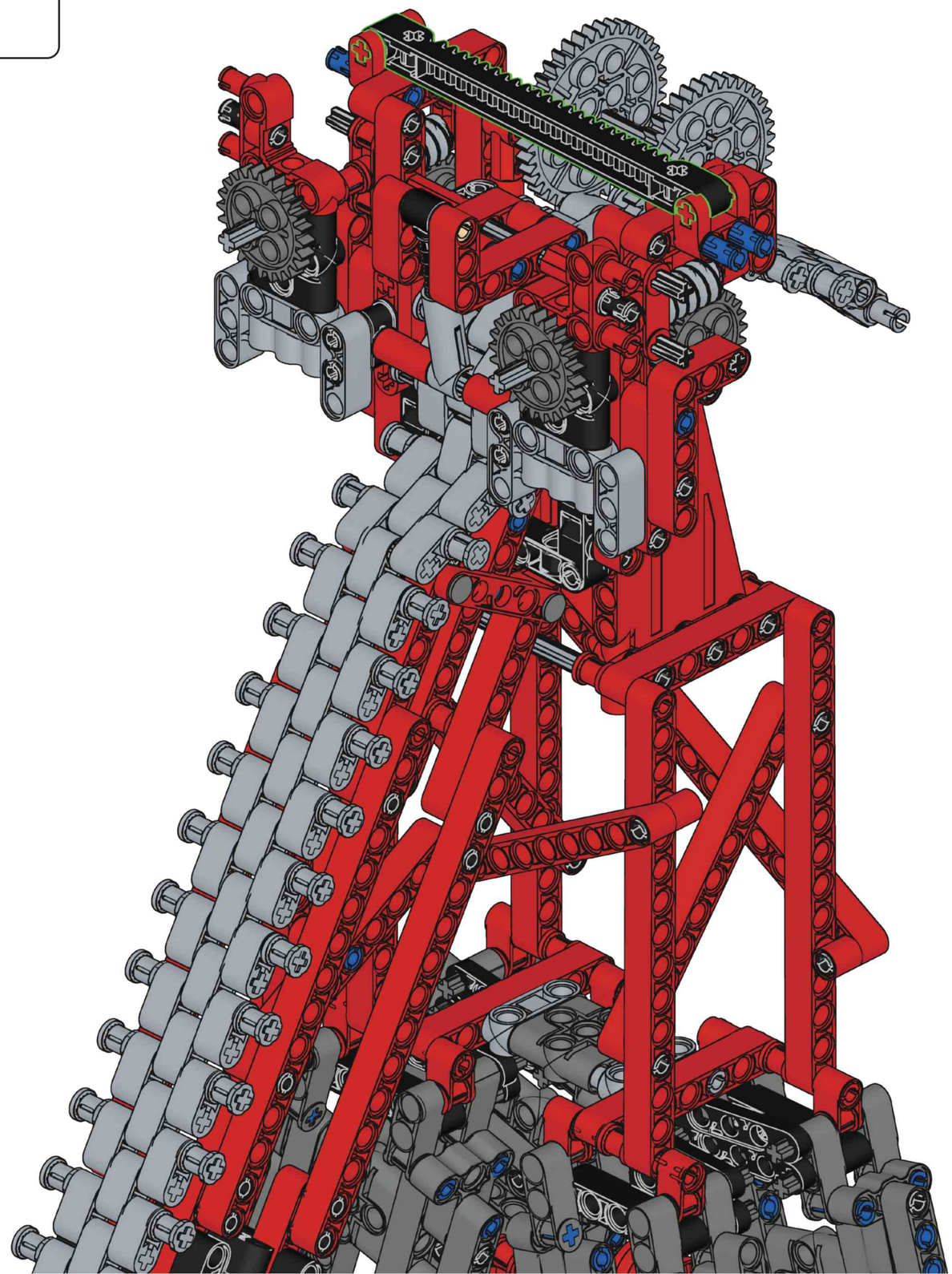

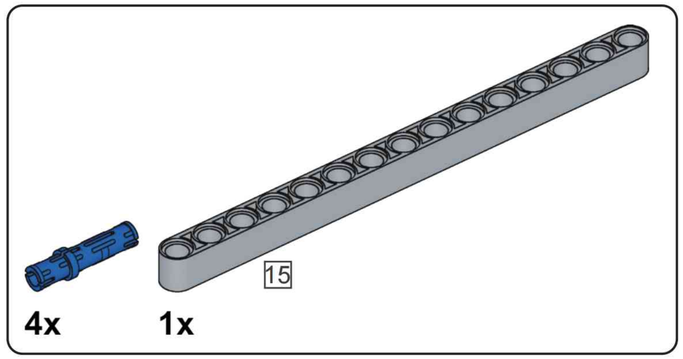

M25

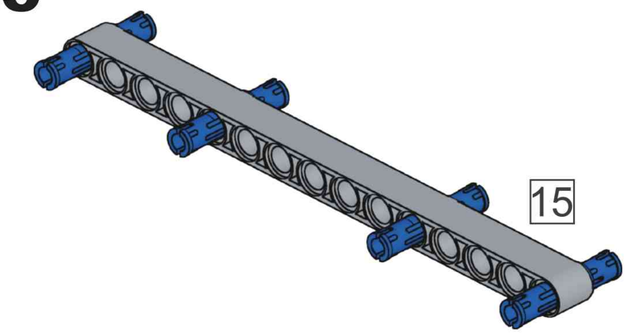

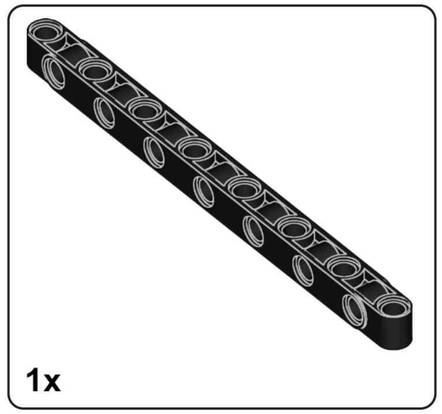

M26

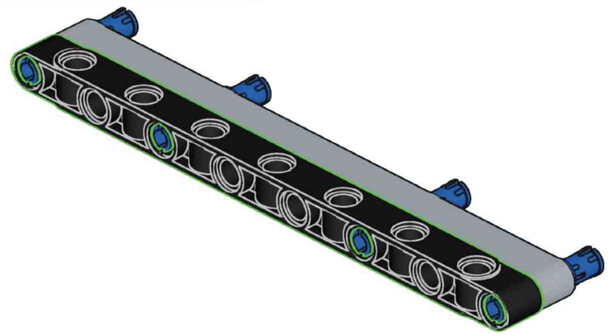

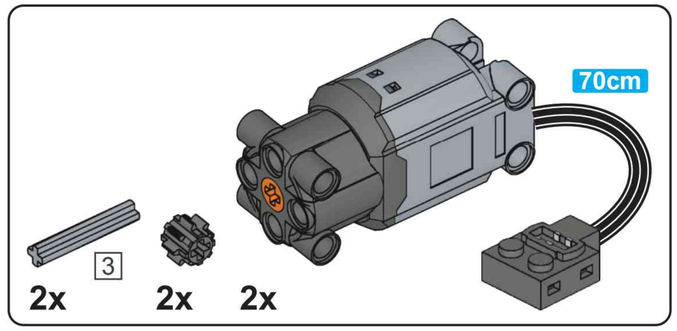

M27

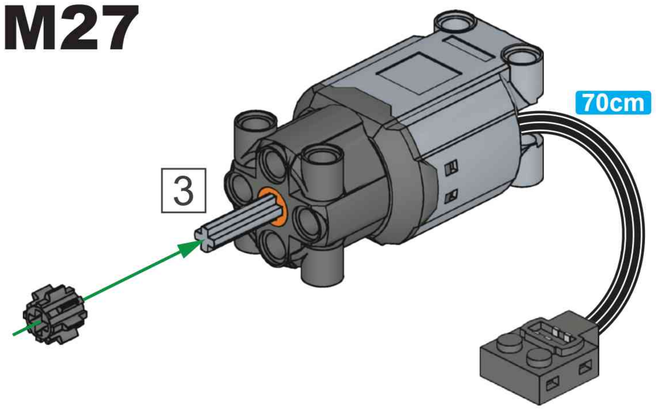

x2

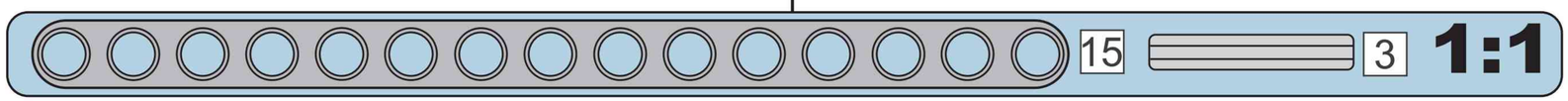

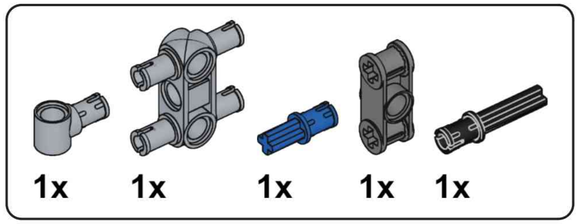

M28

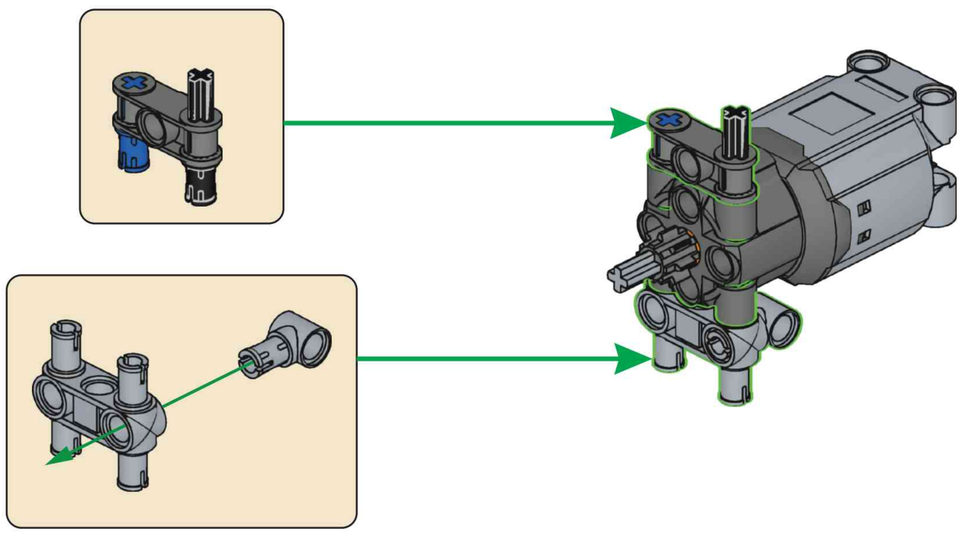

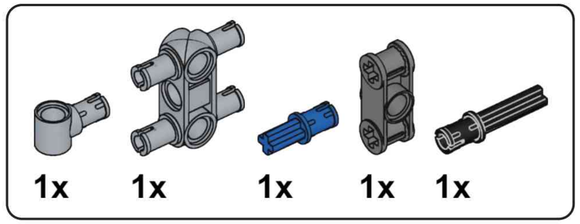

M29

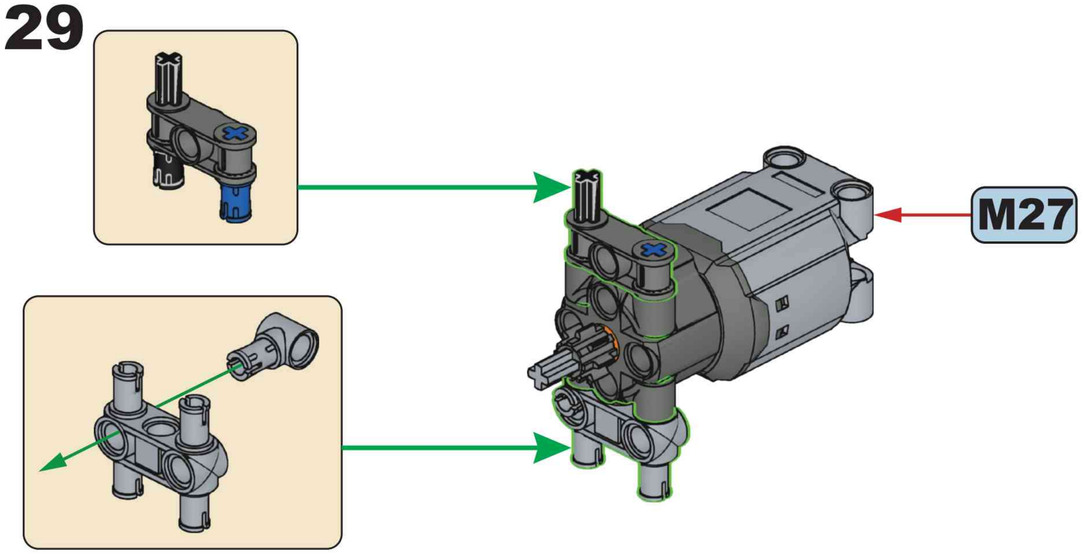

M30

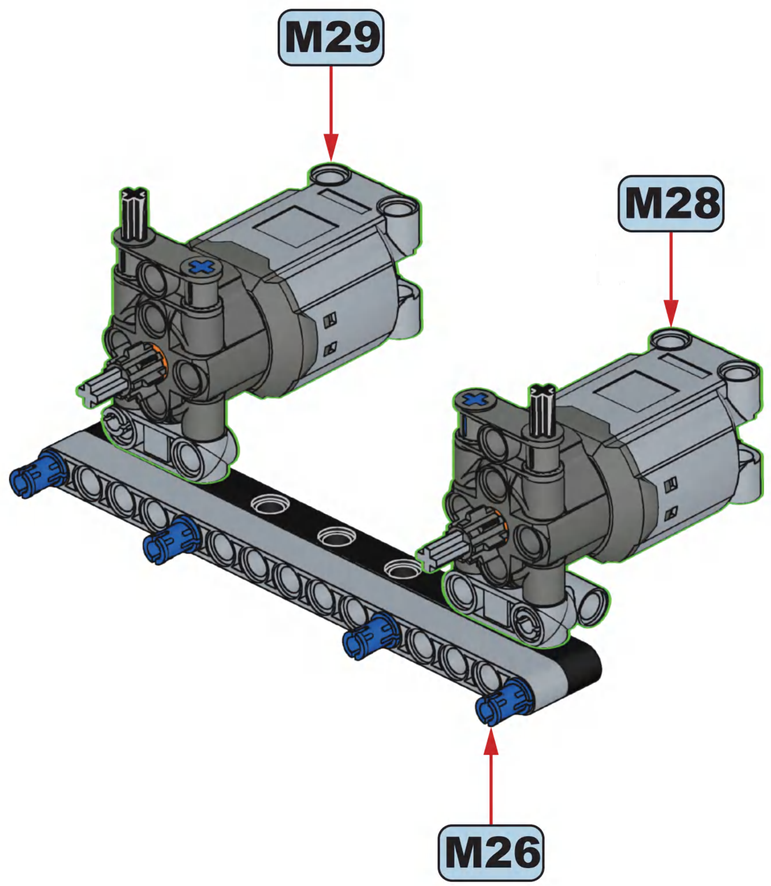

M31

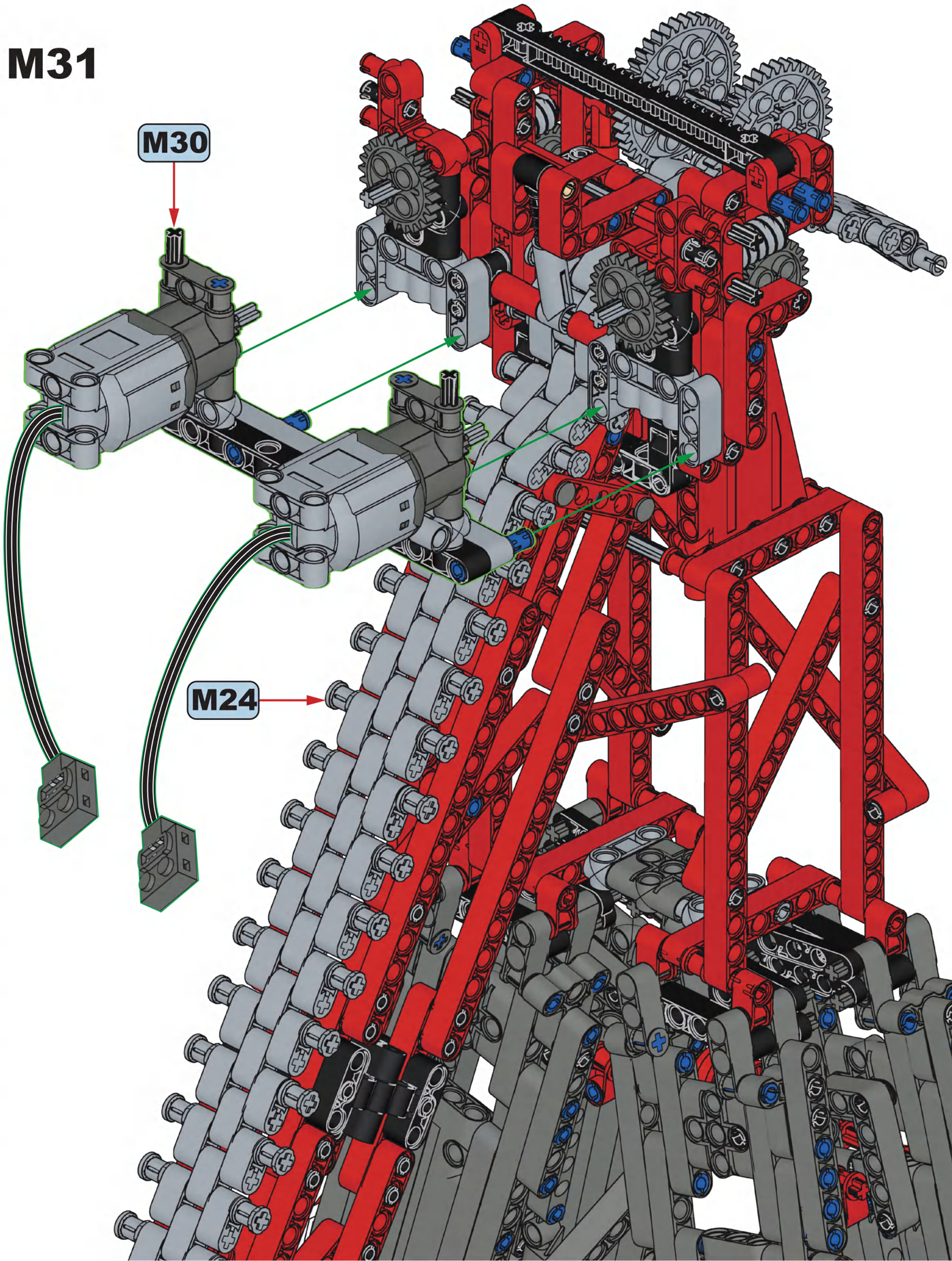

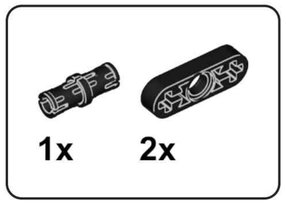

M32

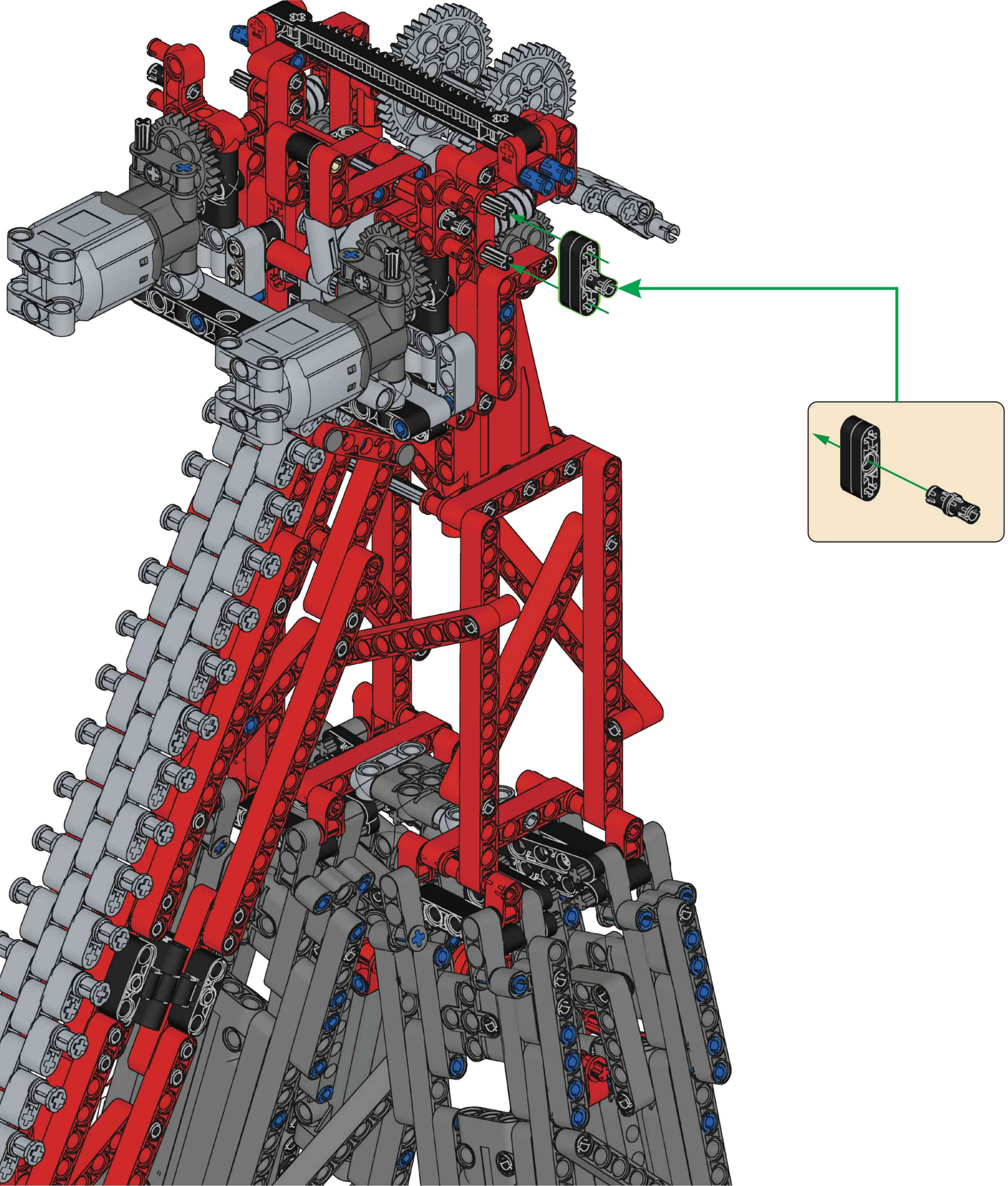

M33

1x 1x 1x

2x 1x 5 1x 7

5

7 1:1

5

1

7

2

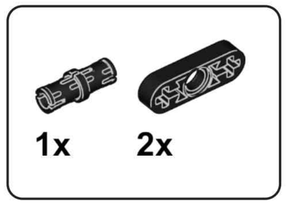

M34

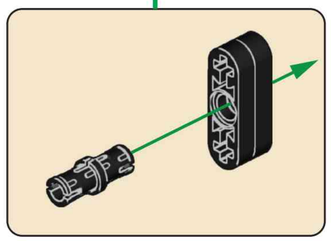

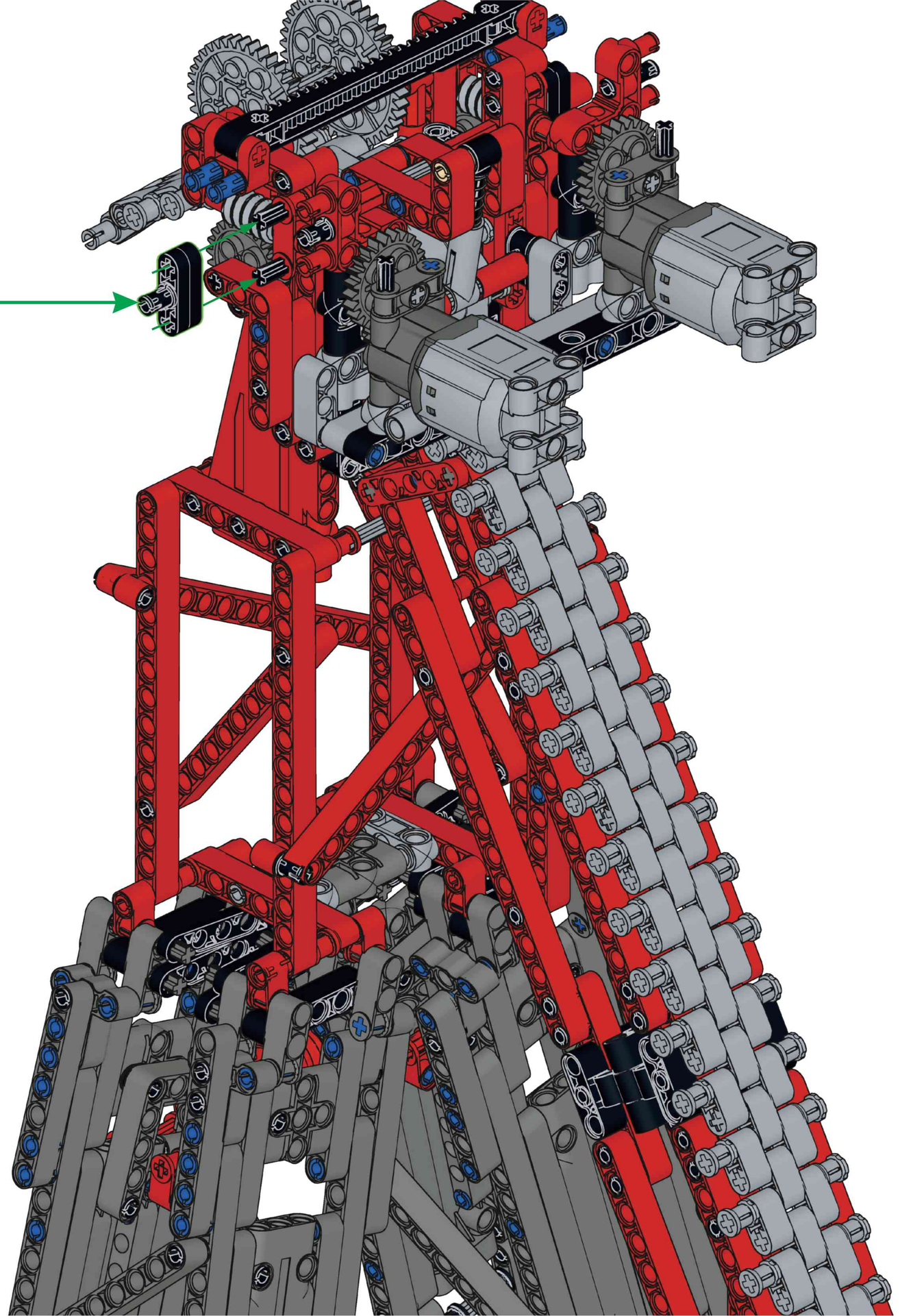

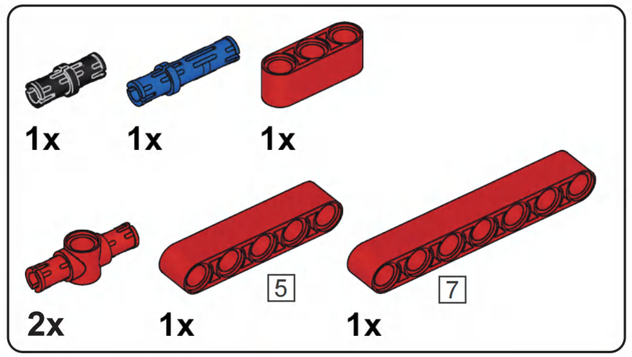

M35

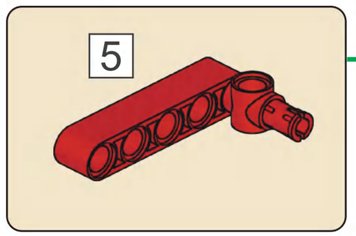

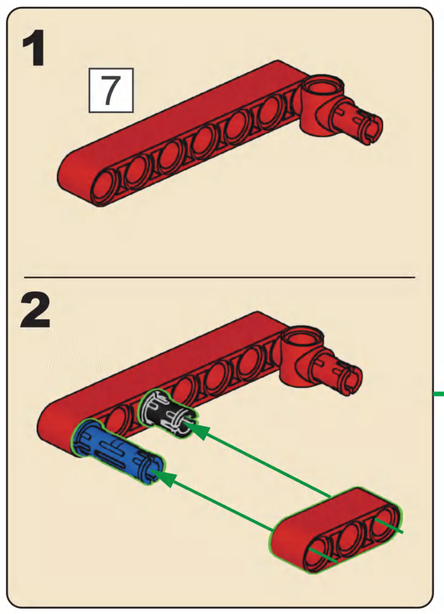

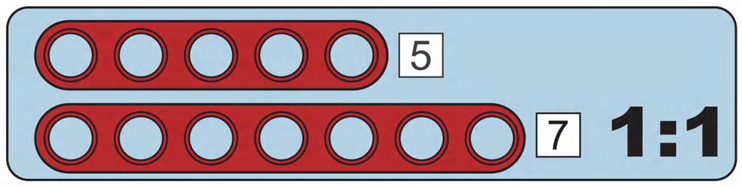

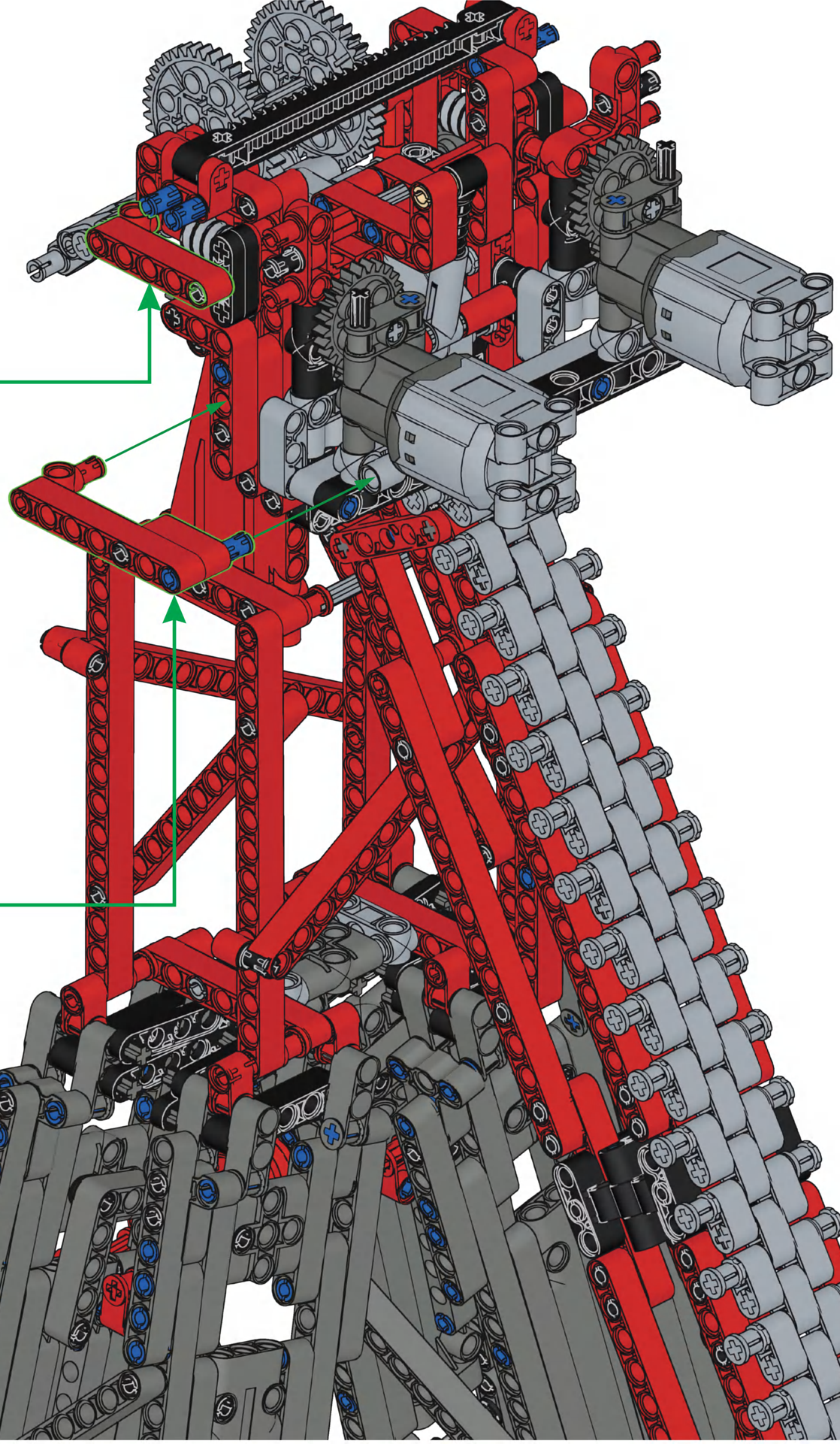

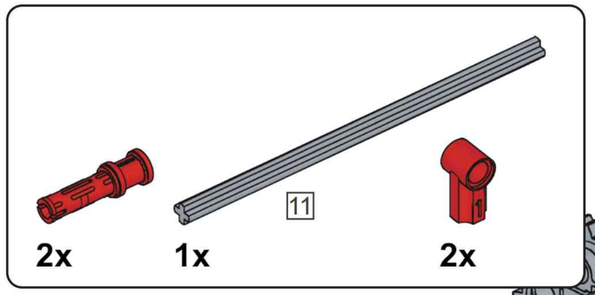

M36

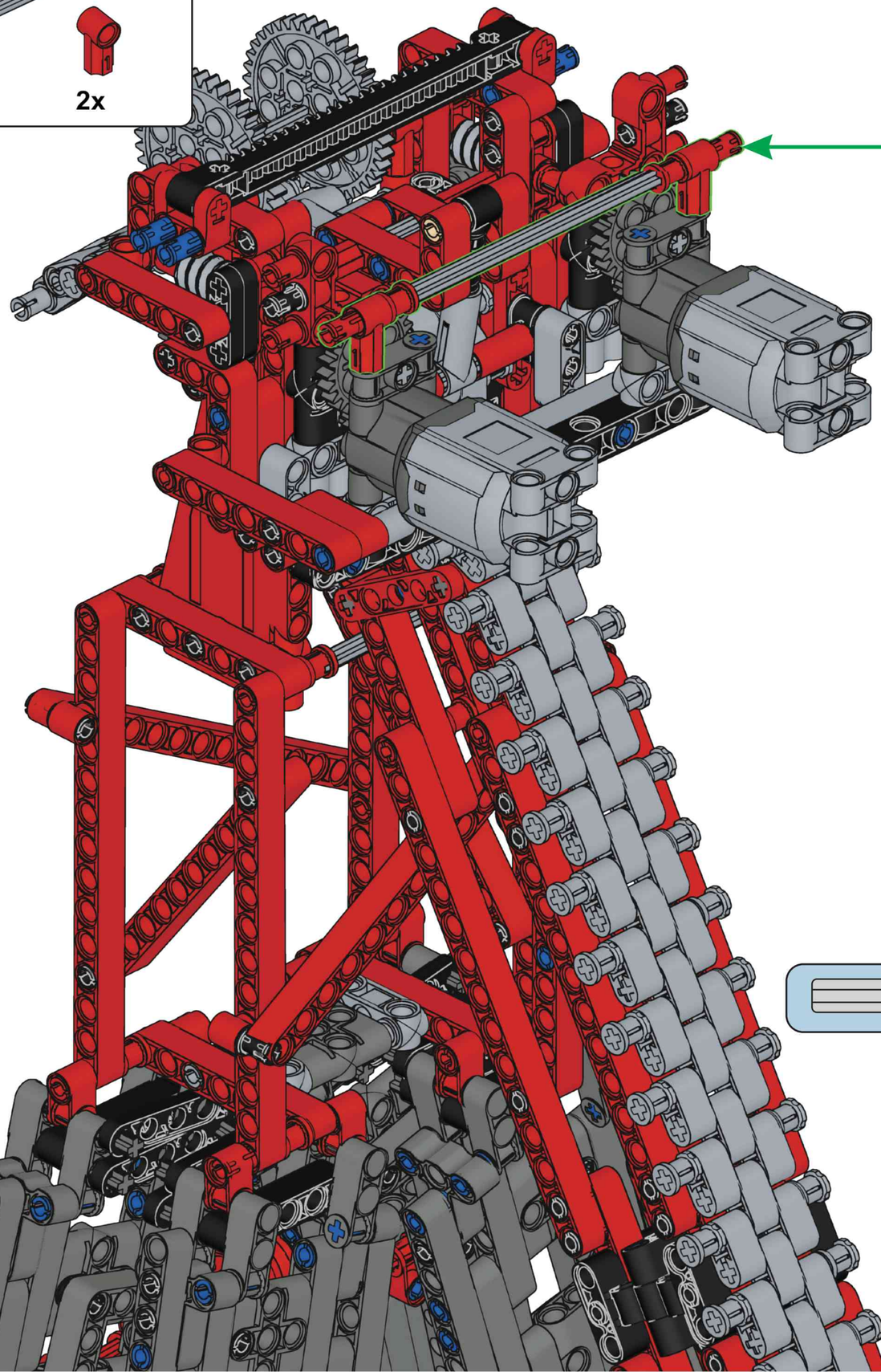

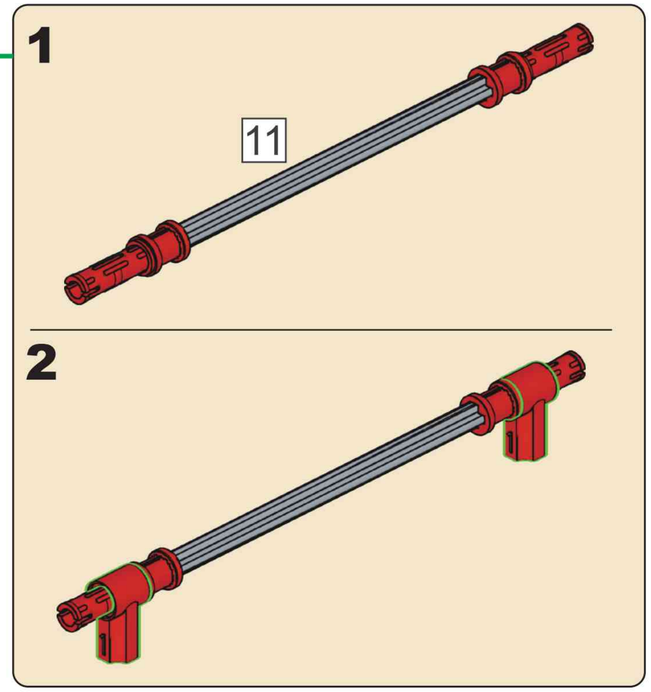

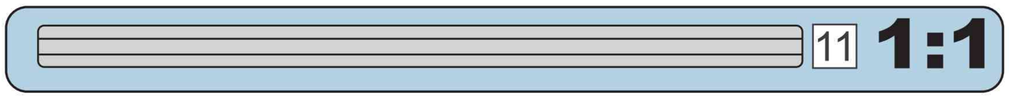

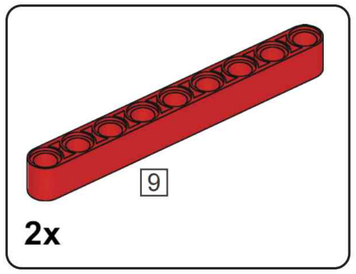

2x

M37

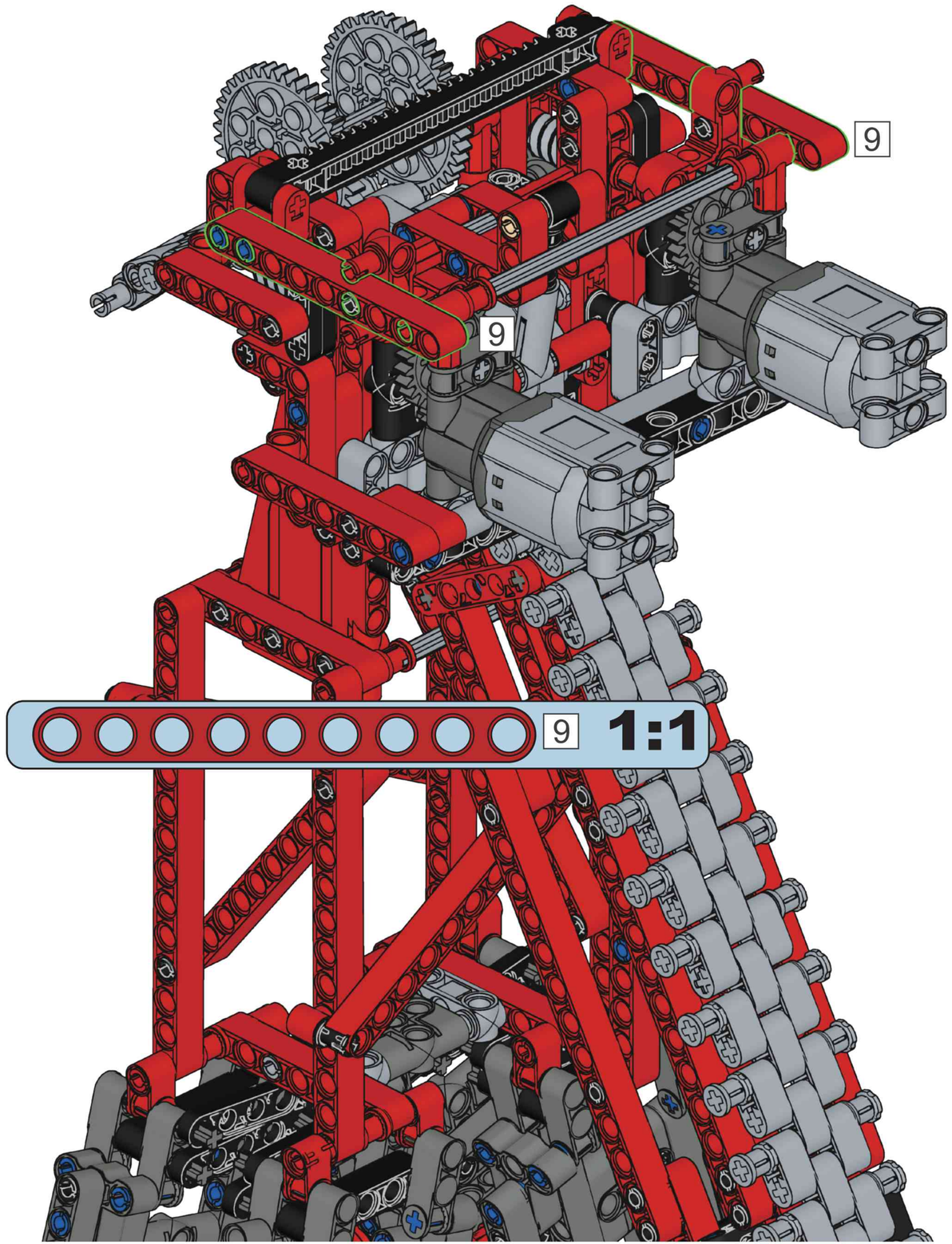

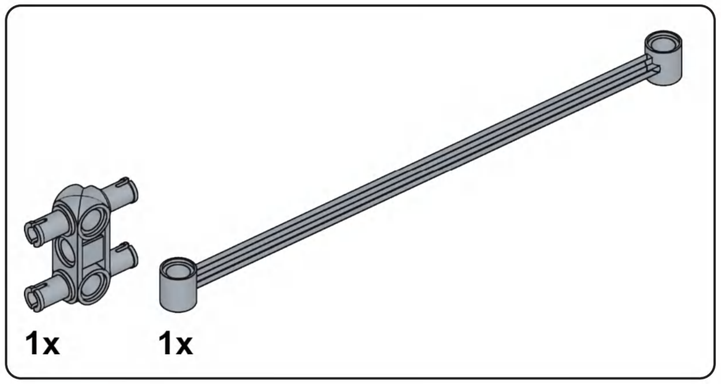

M38

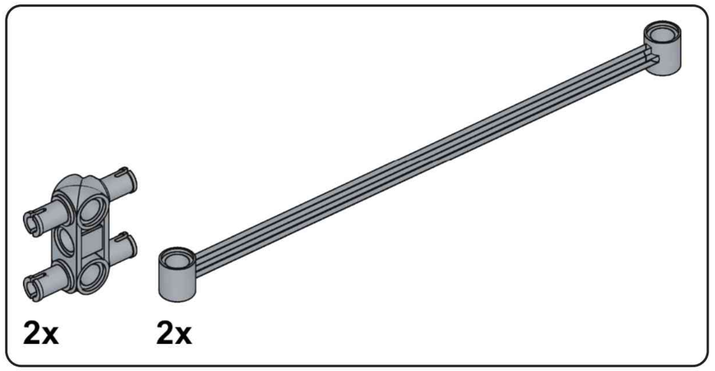

M39

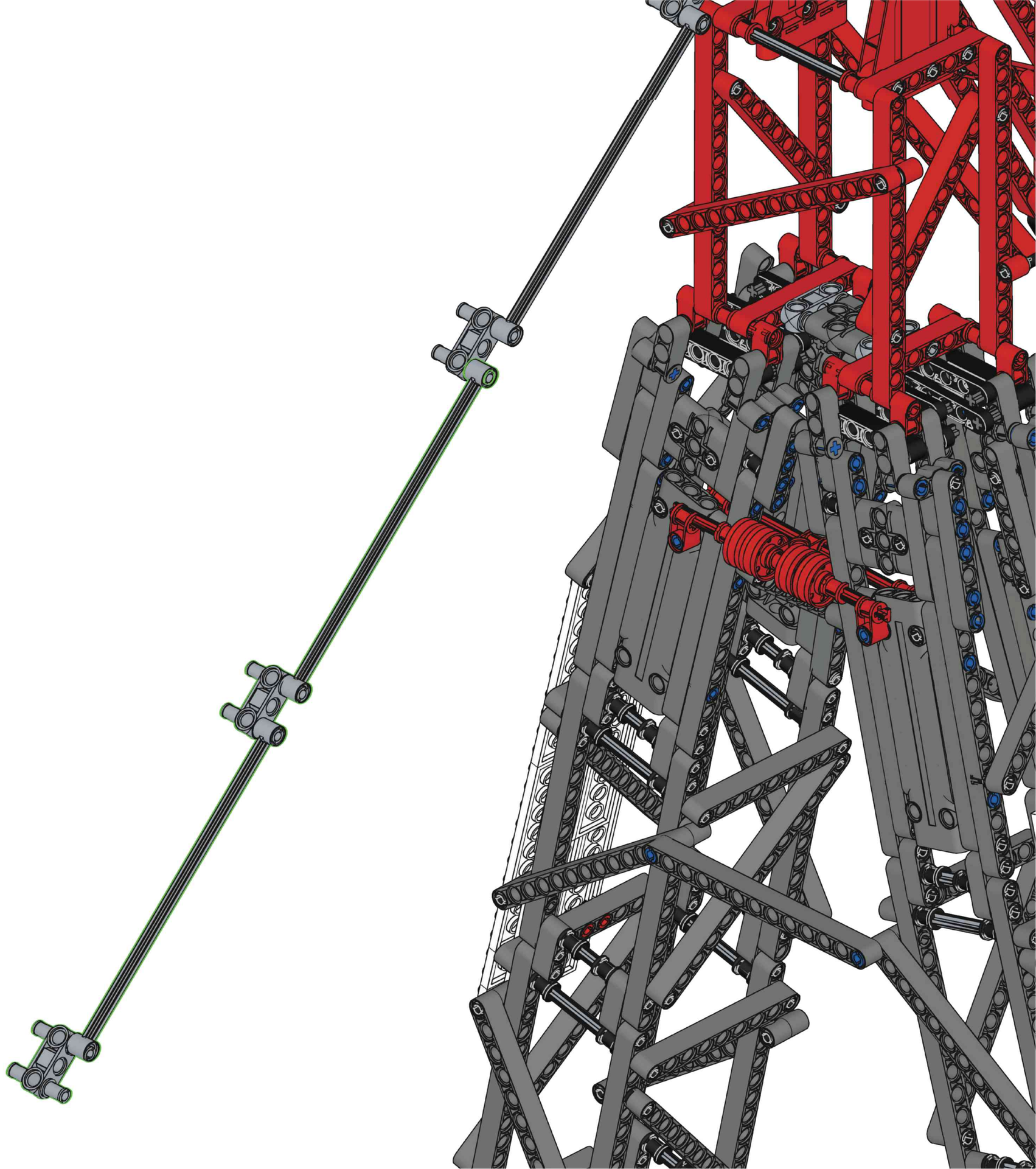

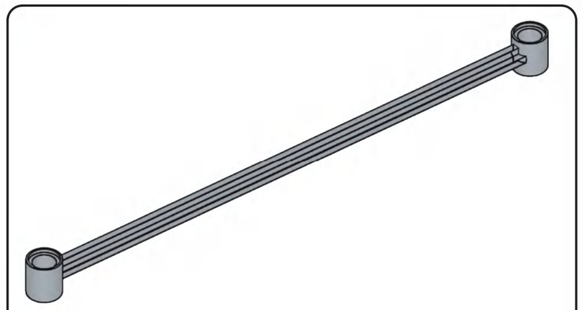

M40

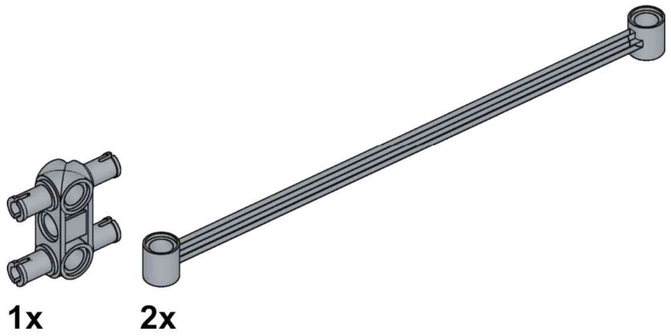

M41



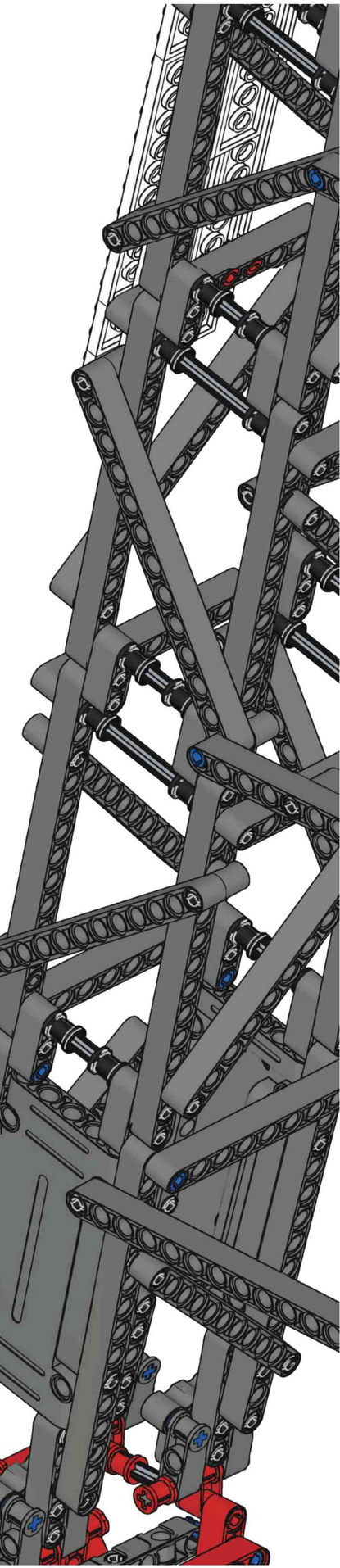

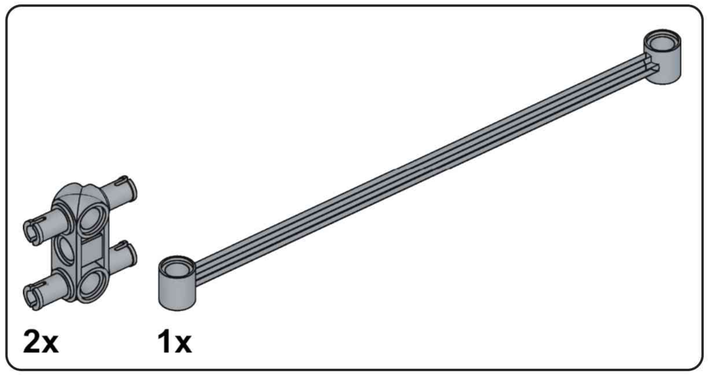

M42



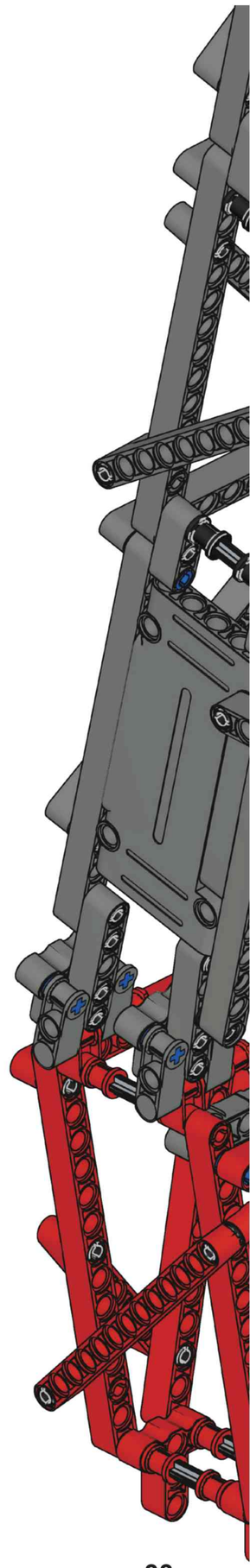

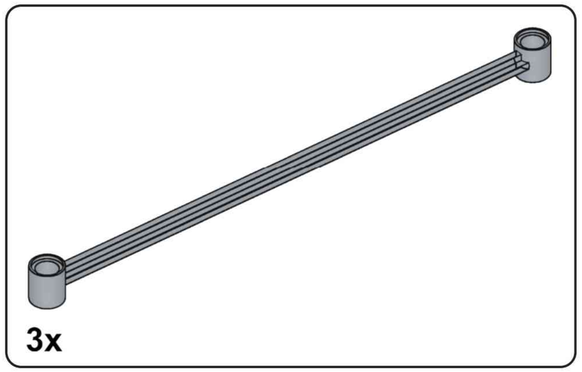

M43



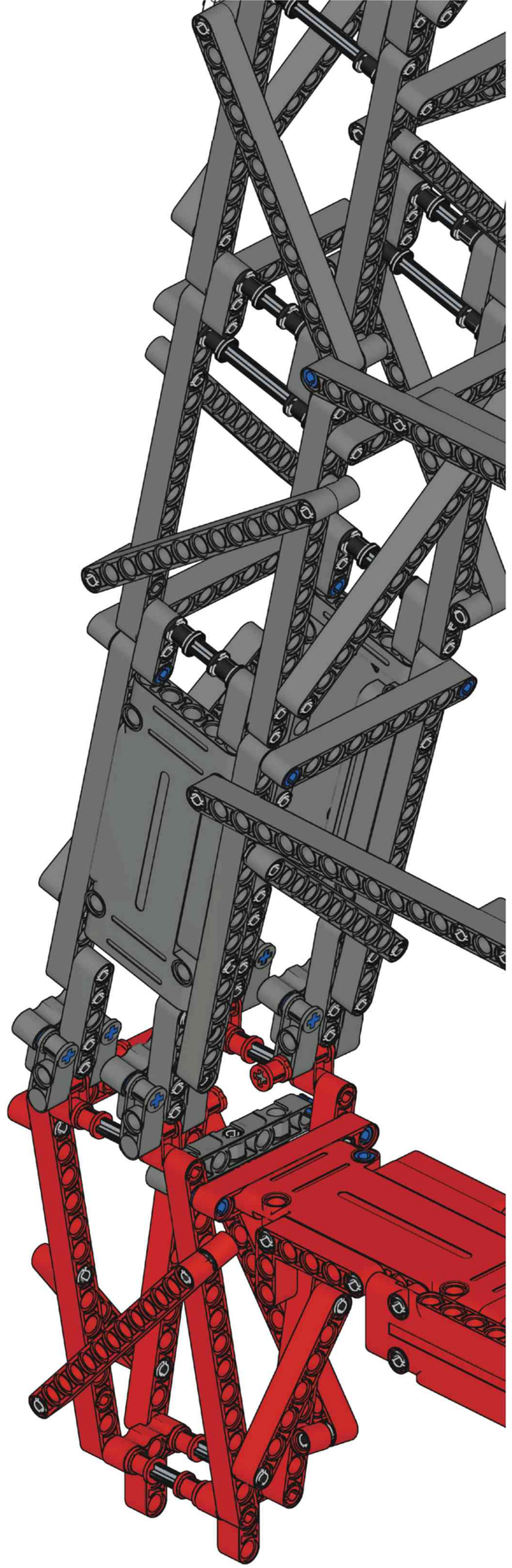

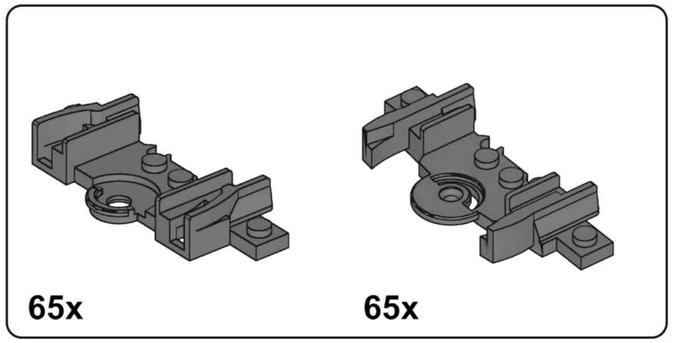

M44

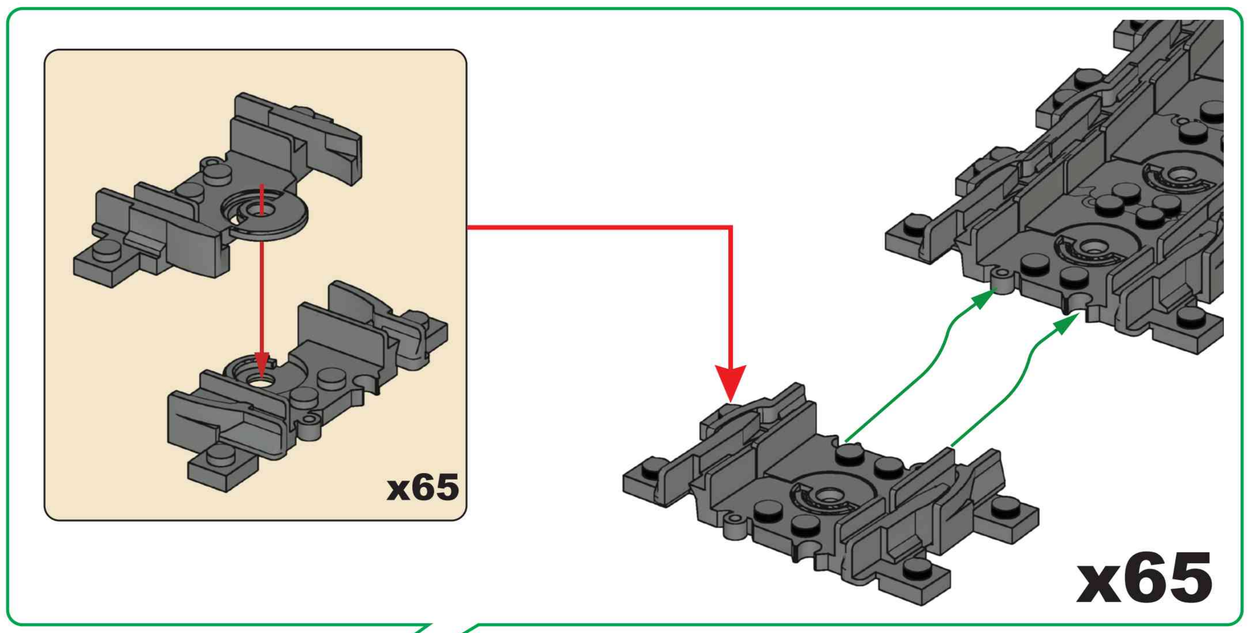

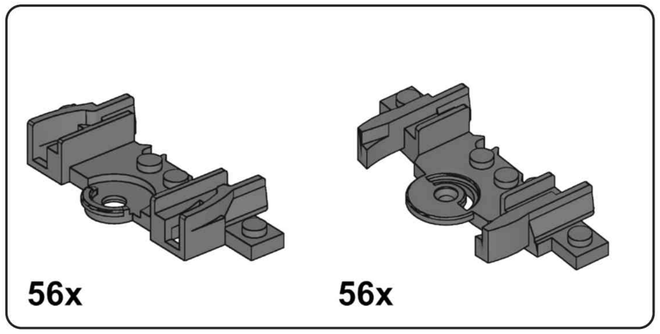

M45

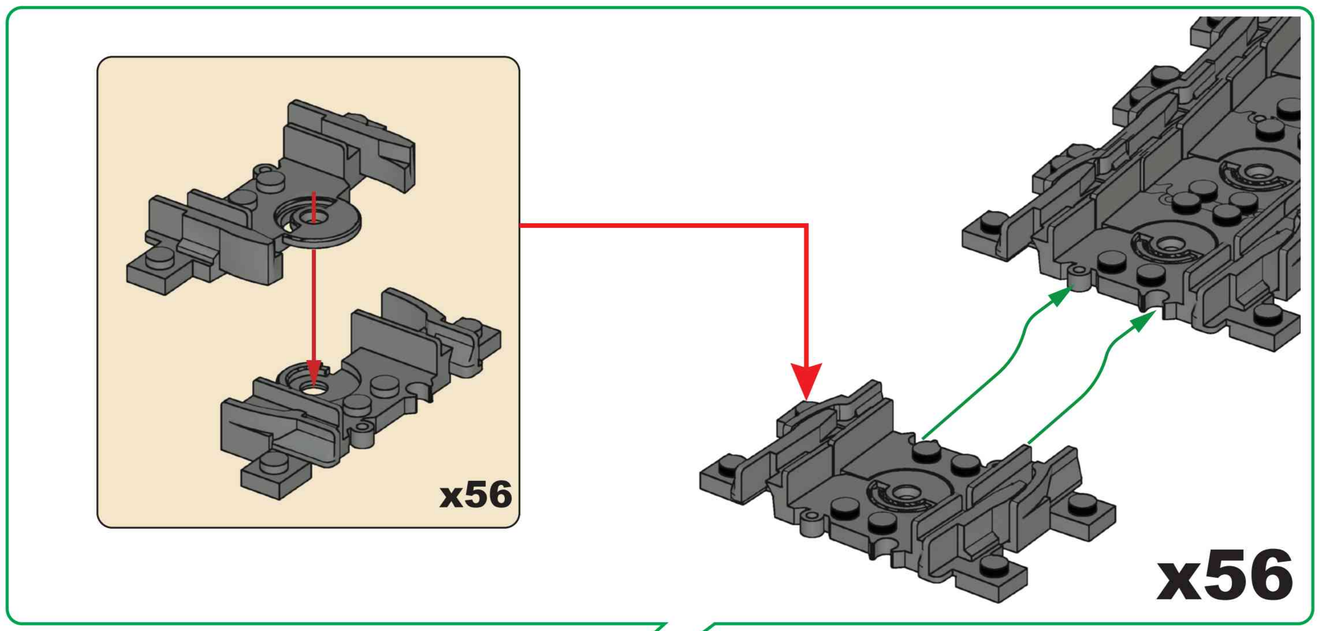

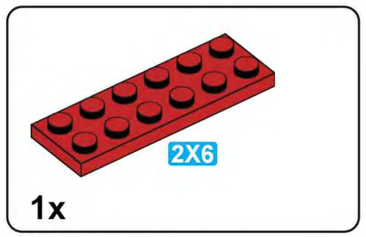

M46



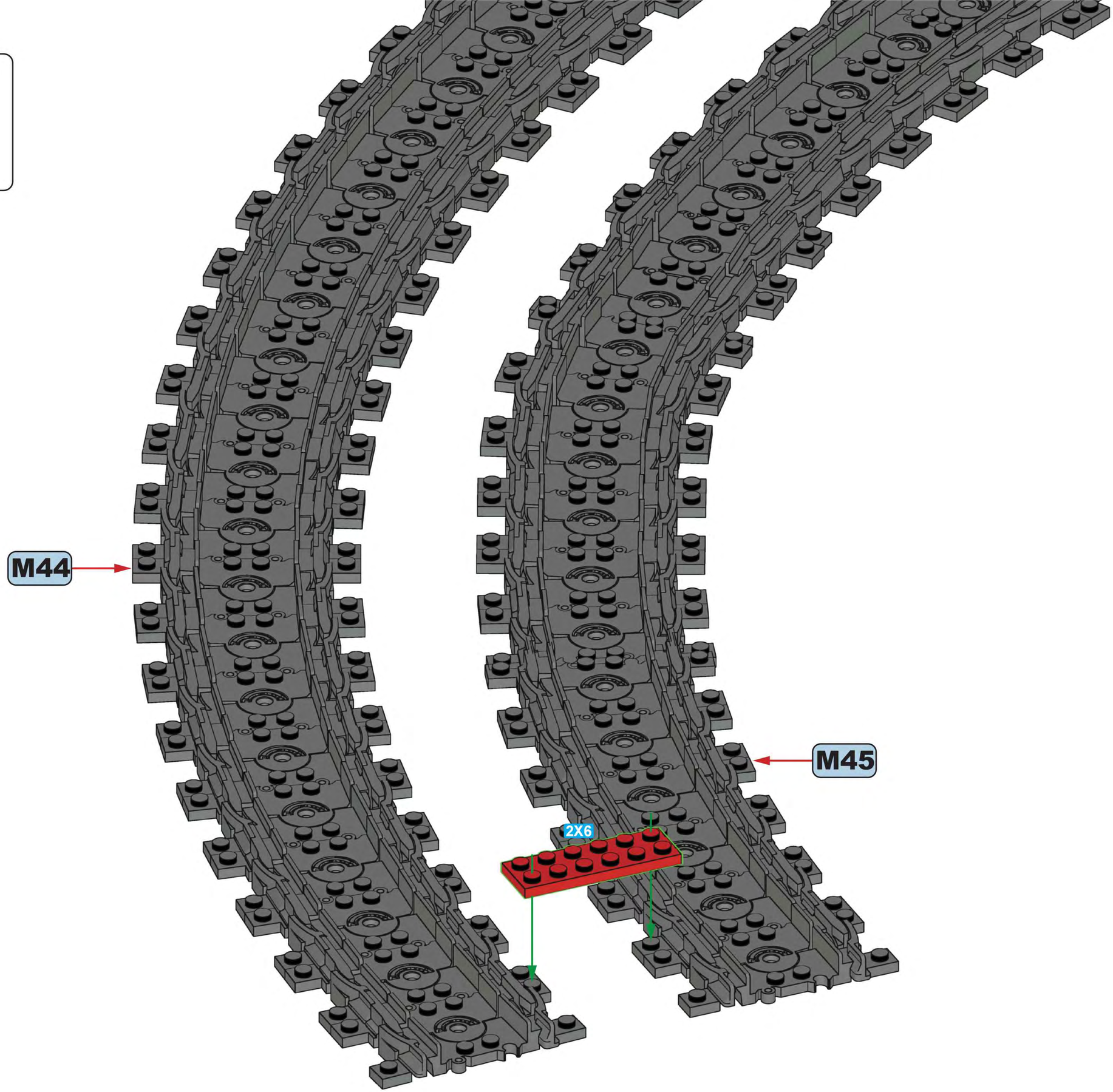

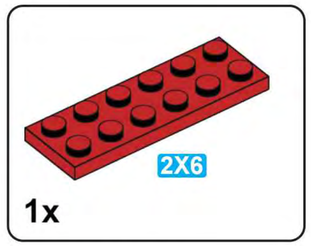

1x

M47

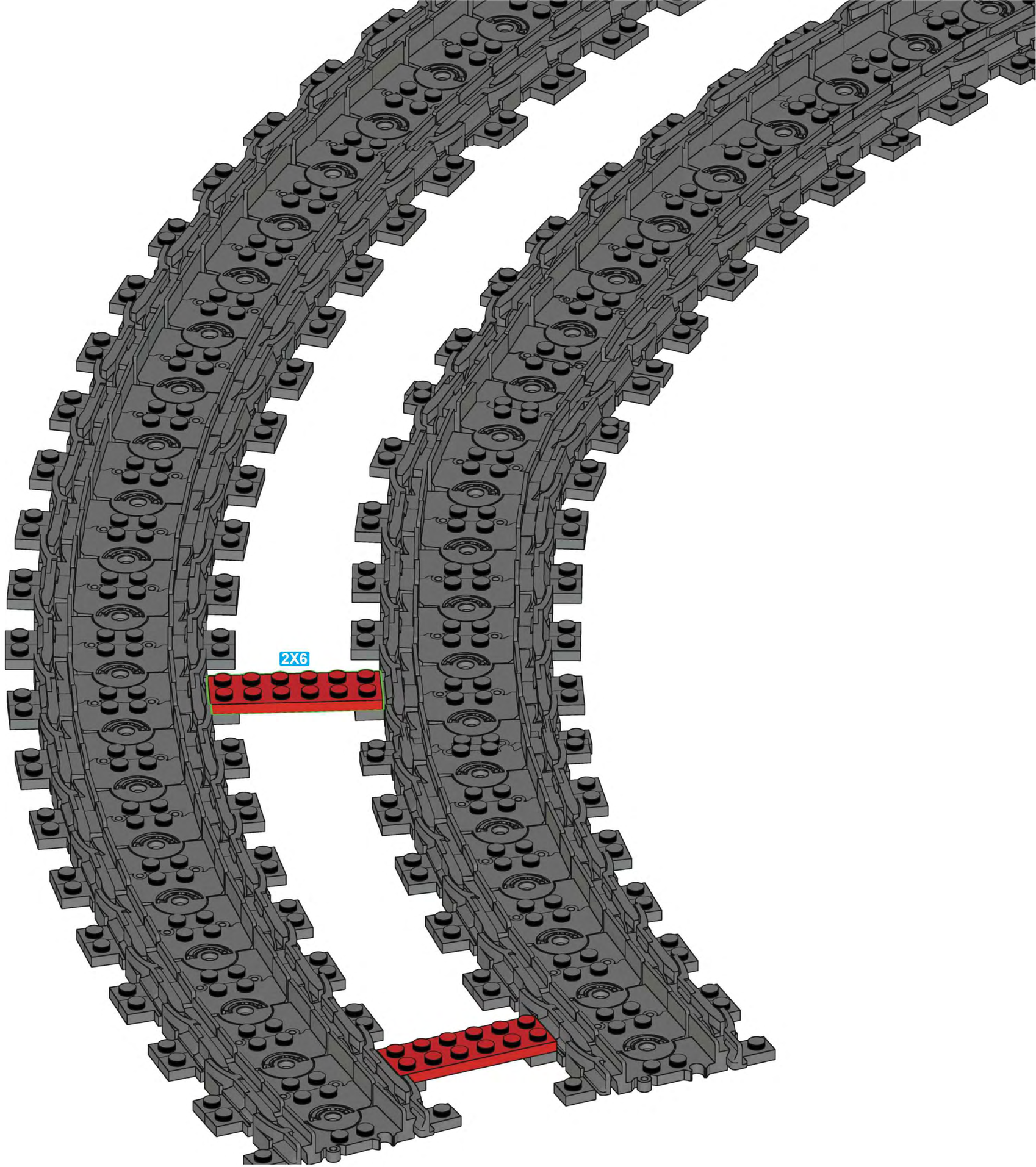

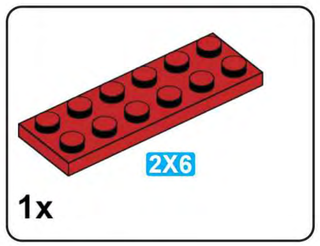

1x

M48

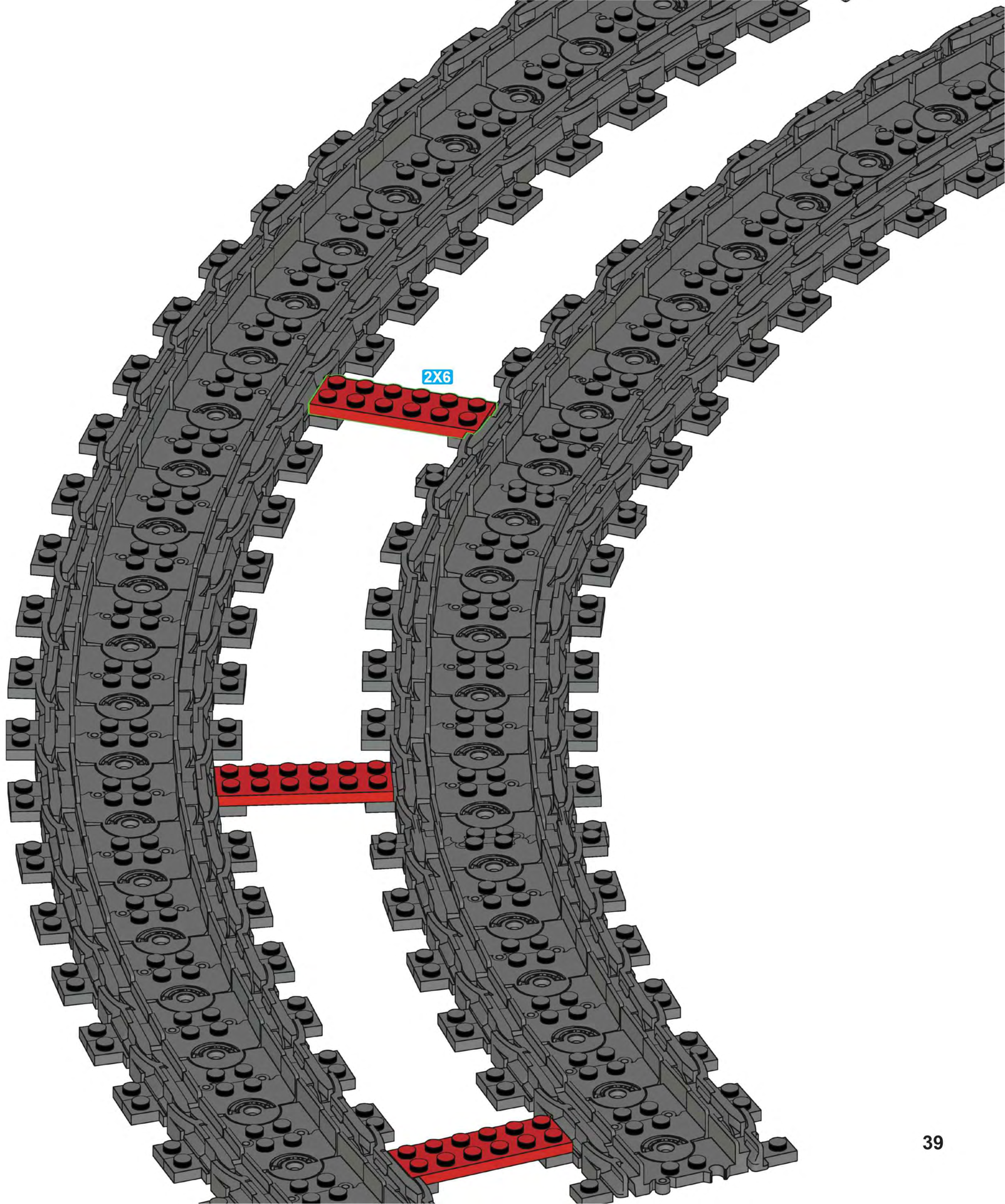

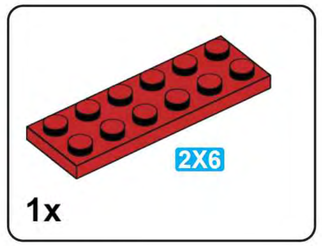

1x

M49

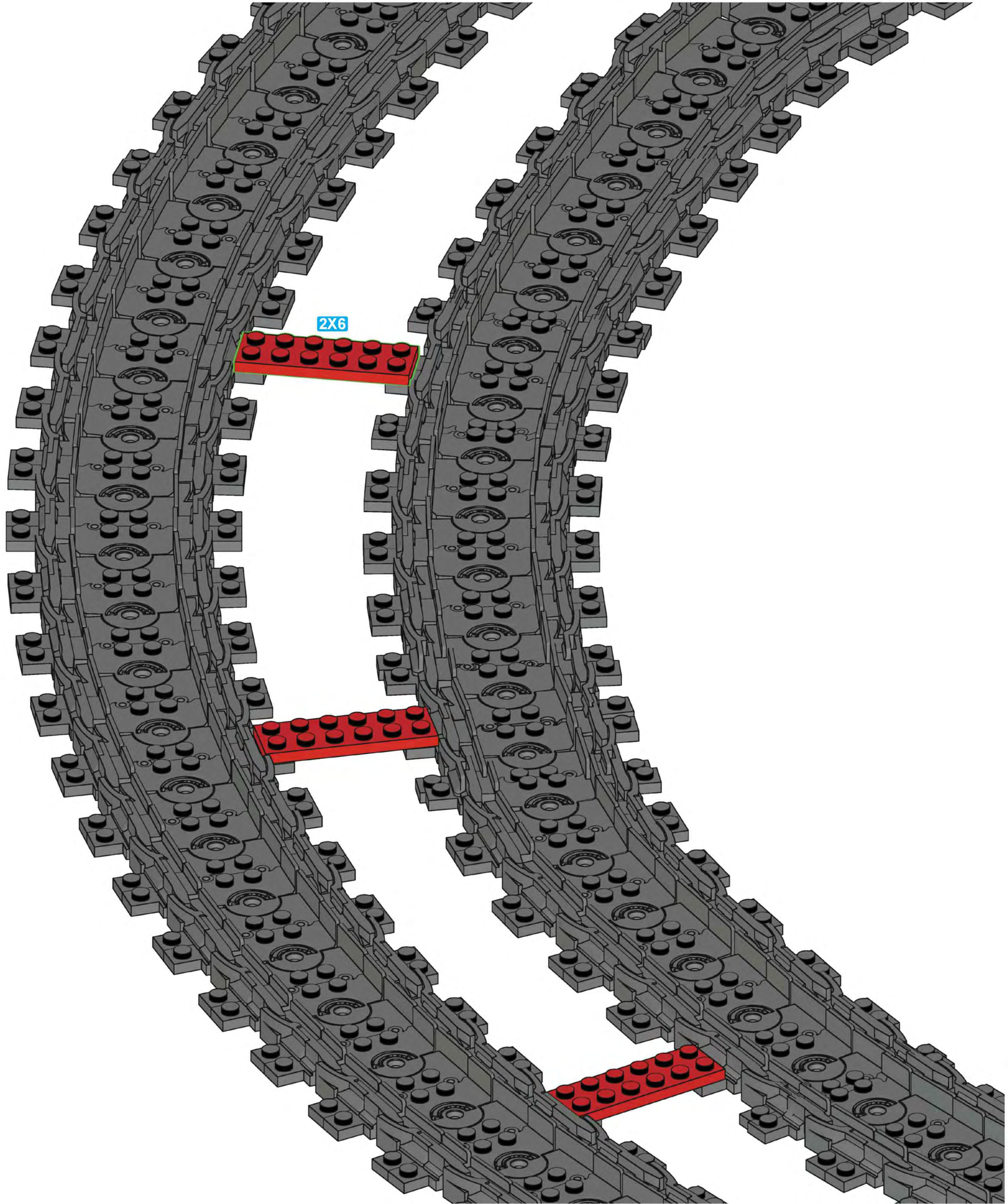

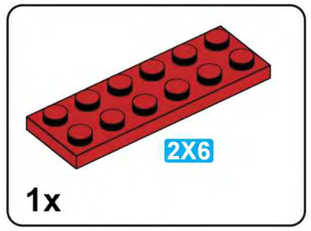

1x

M50

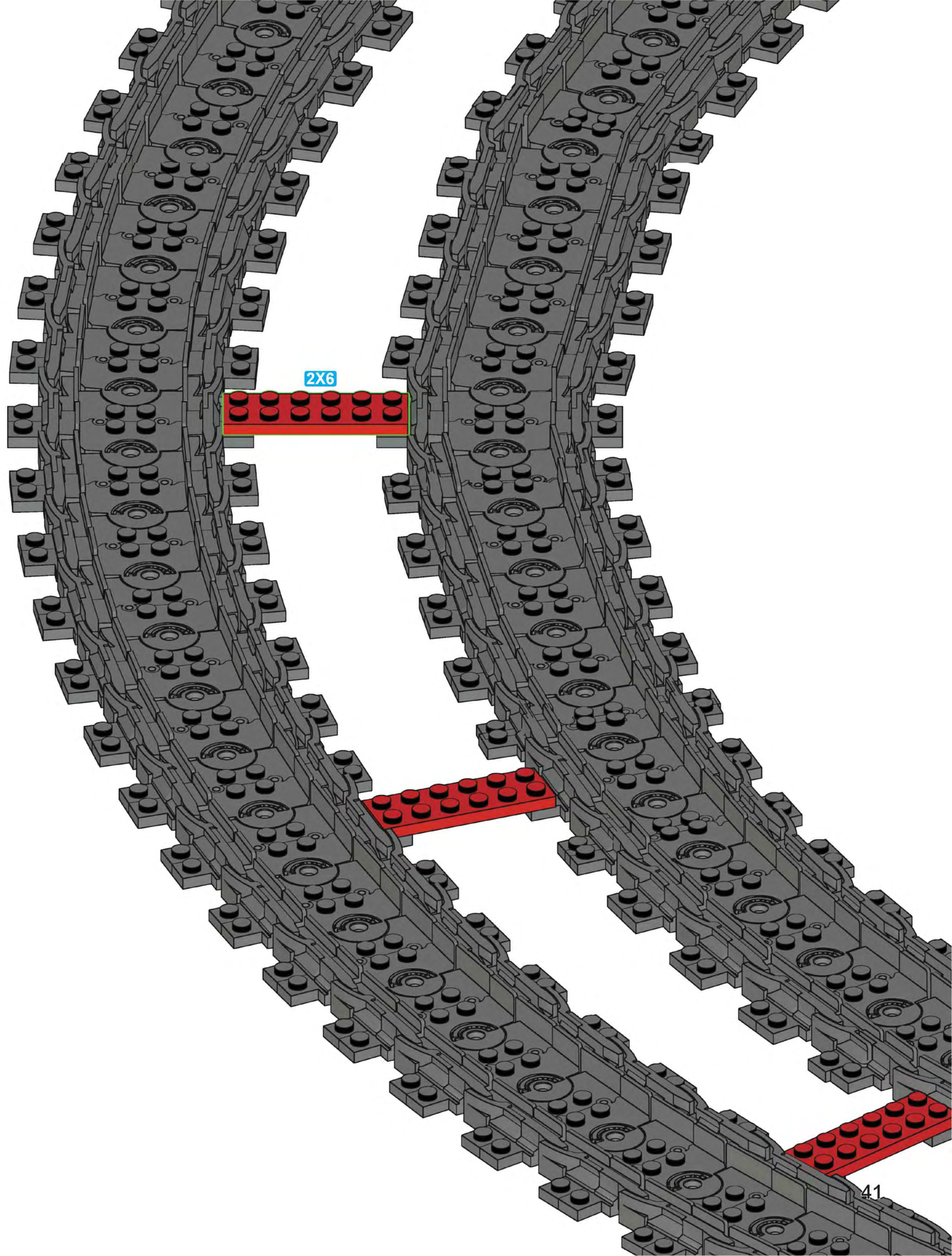

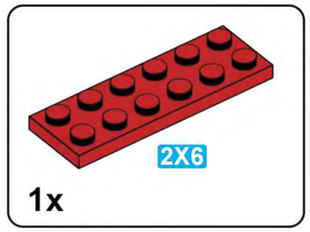

1x

M51

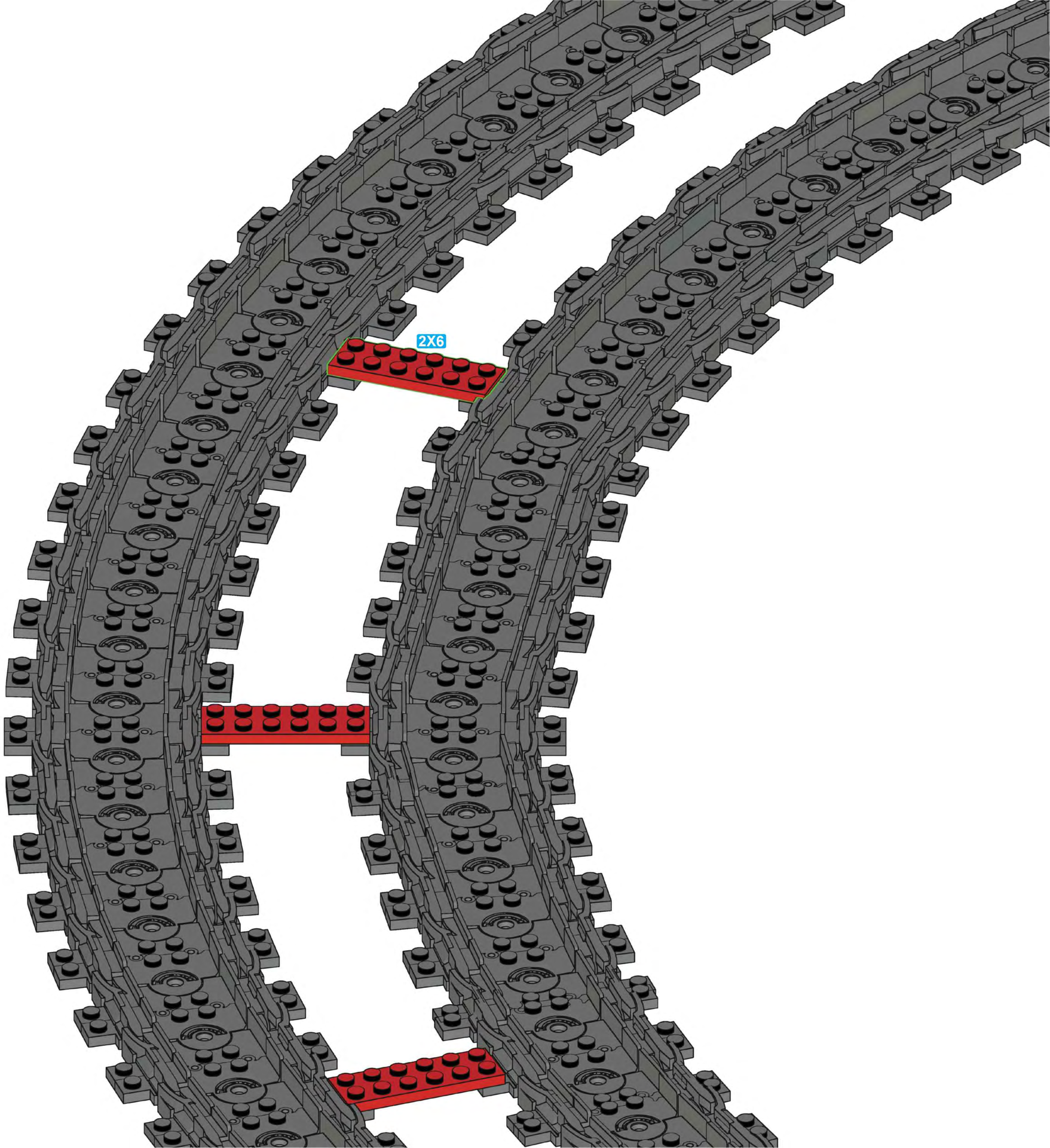

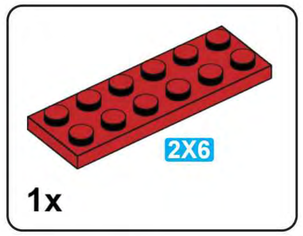

1x

M52

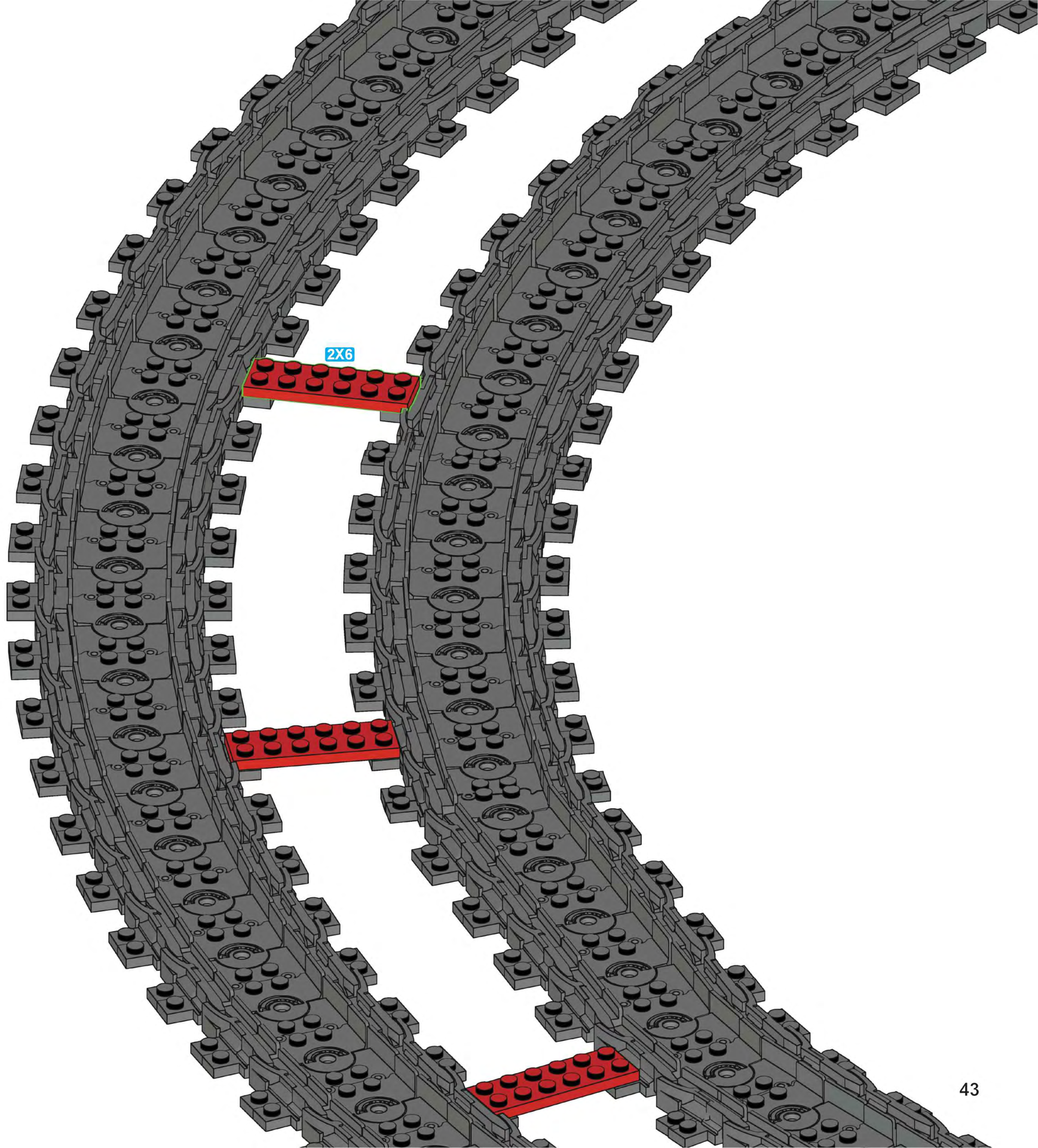

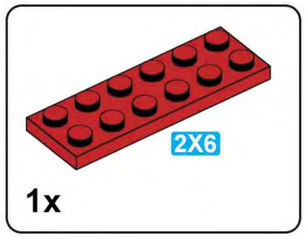

1x

M53

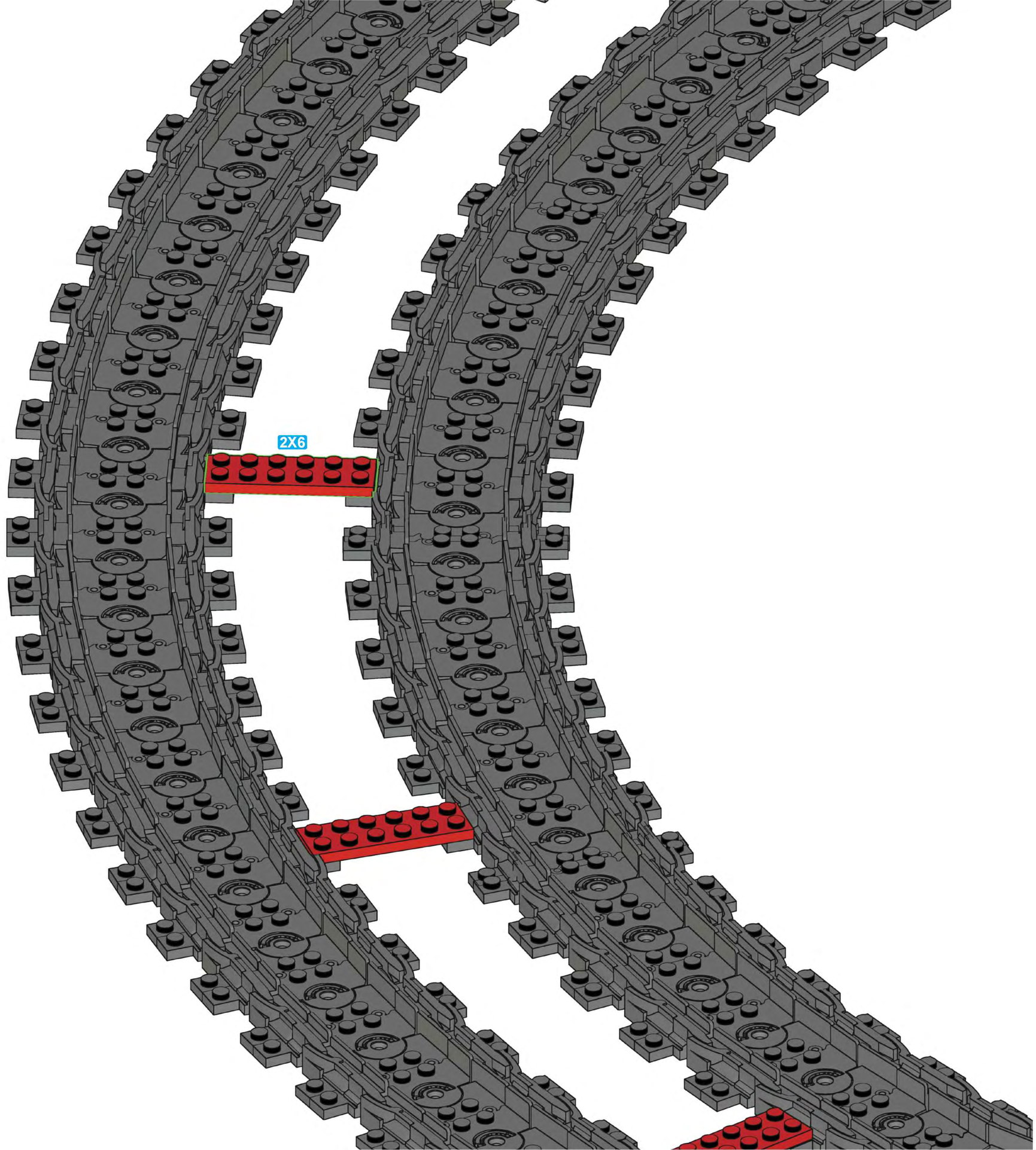

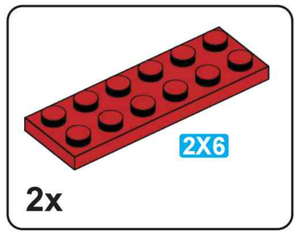

2x

M54

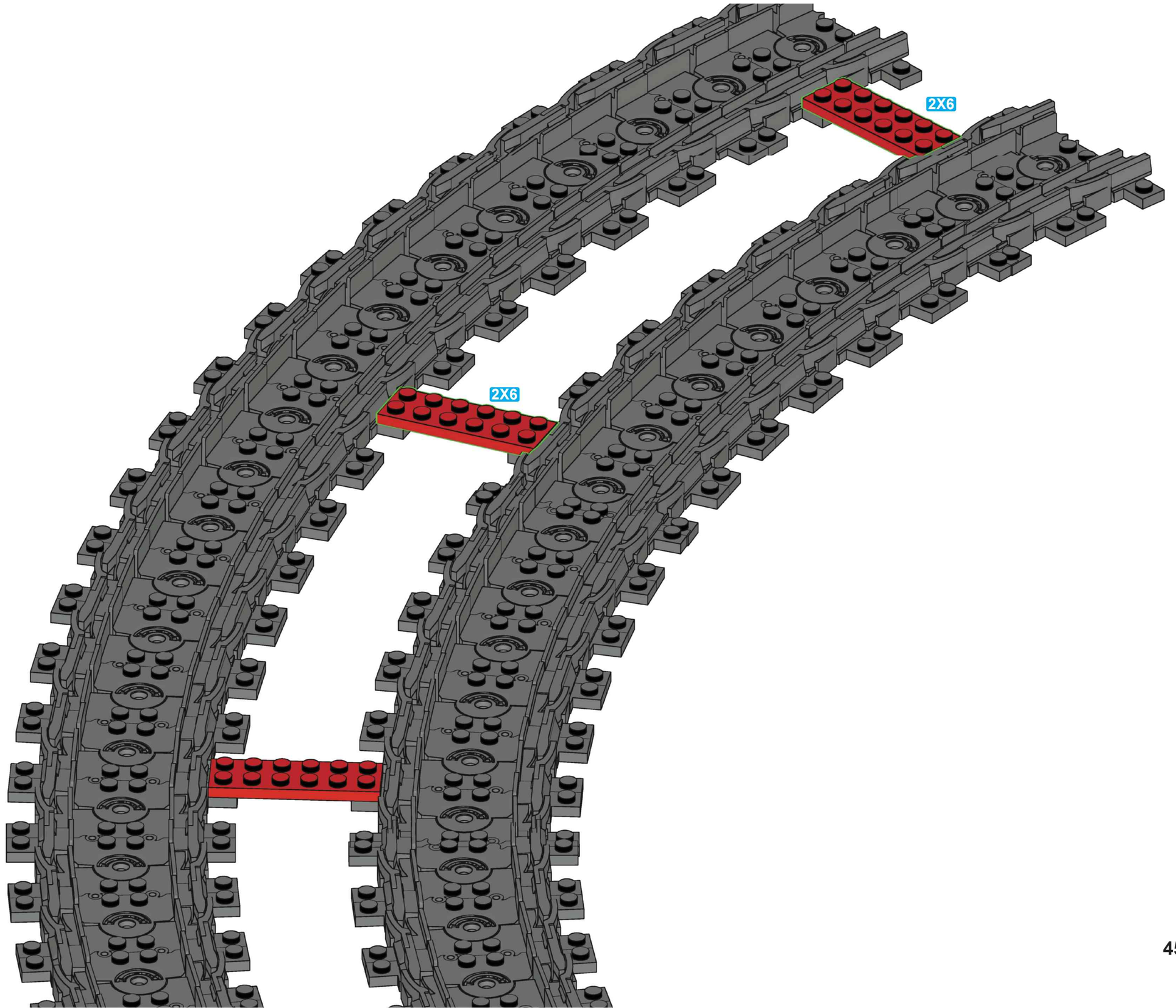

M55

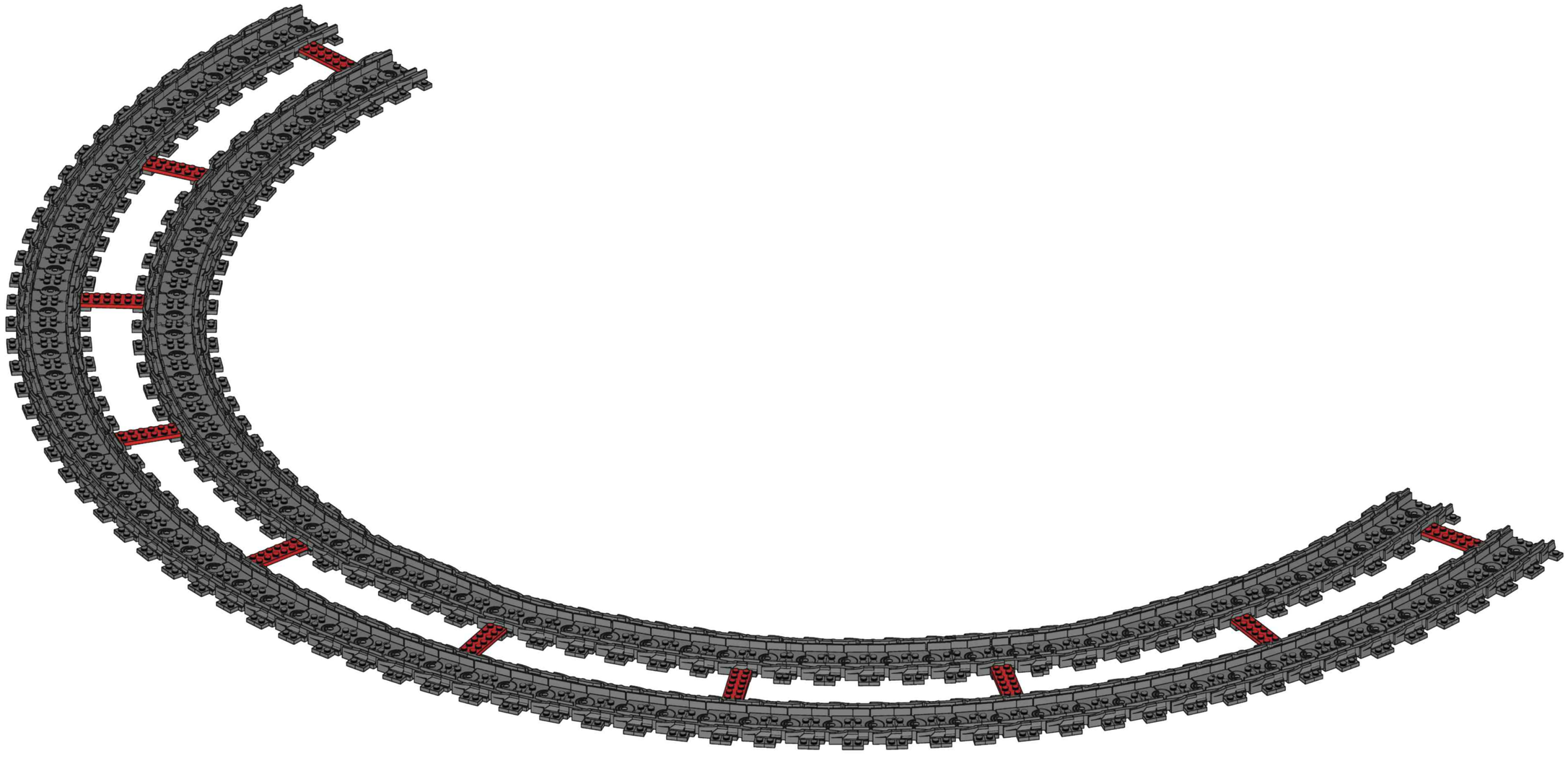

M56

1

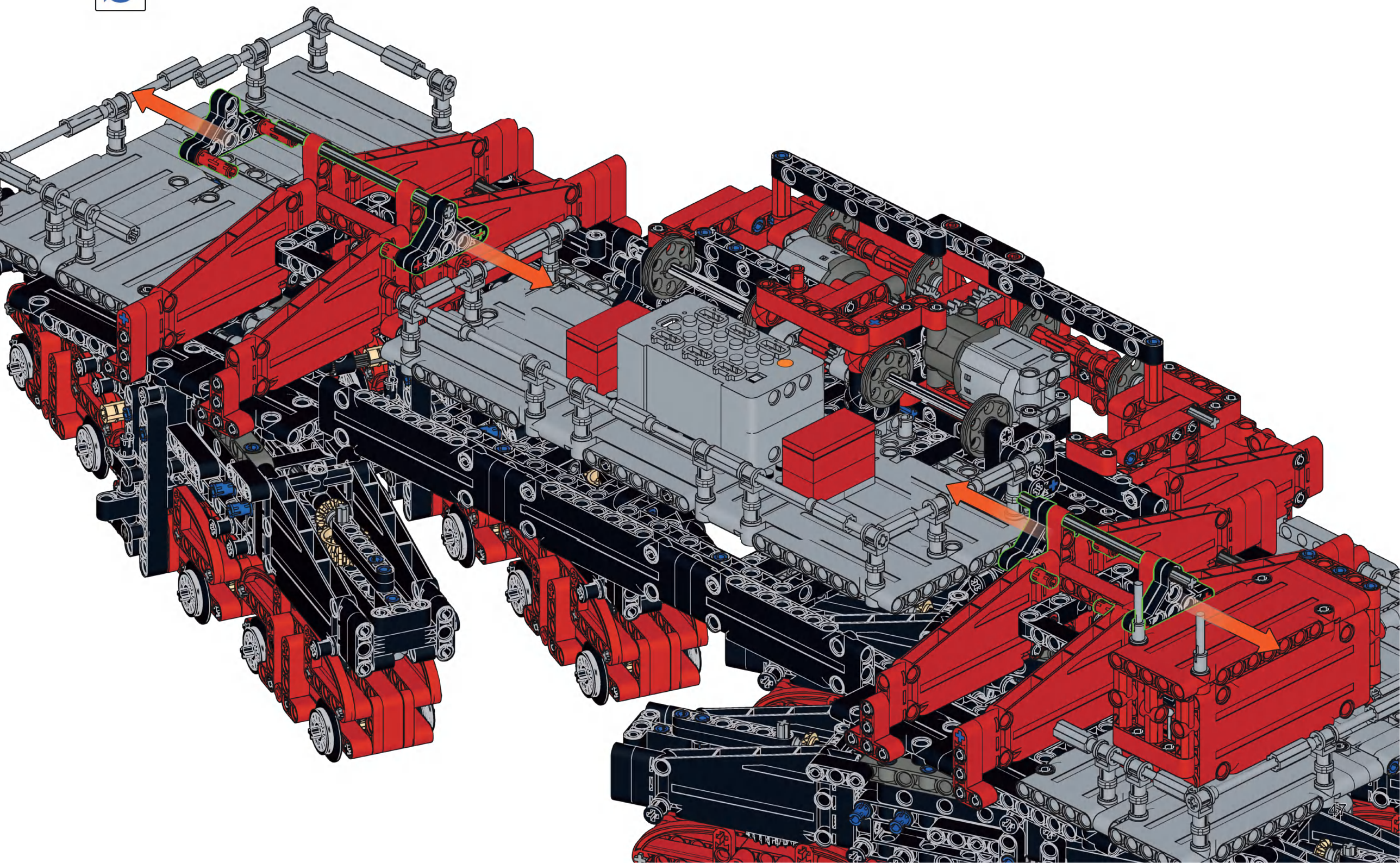

2



11

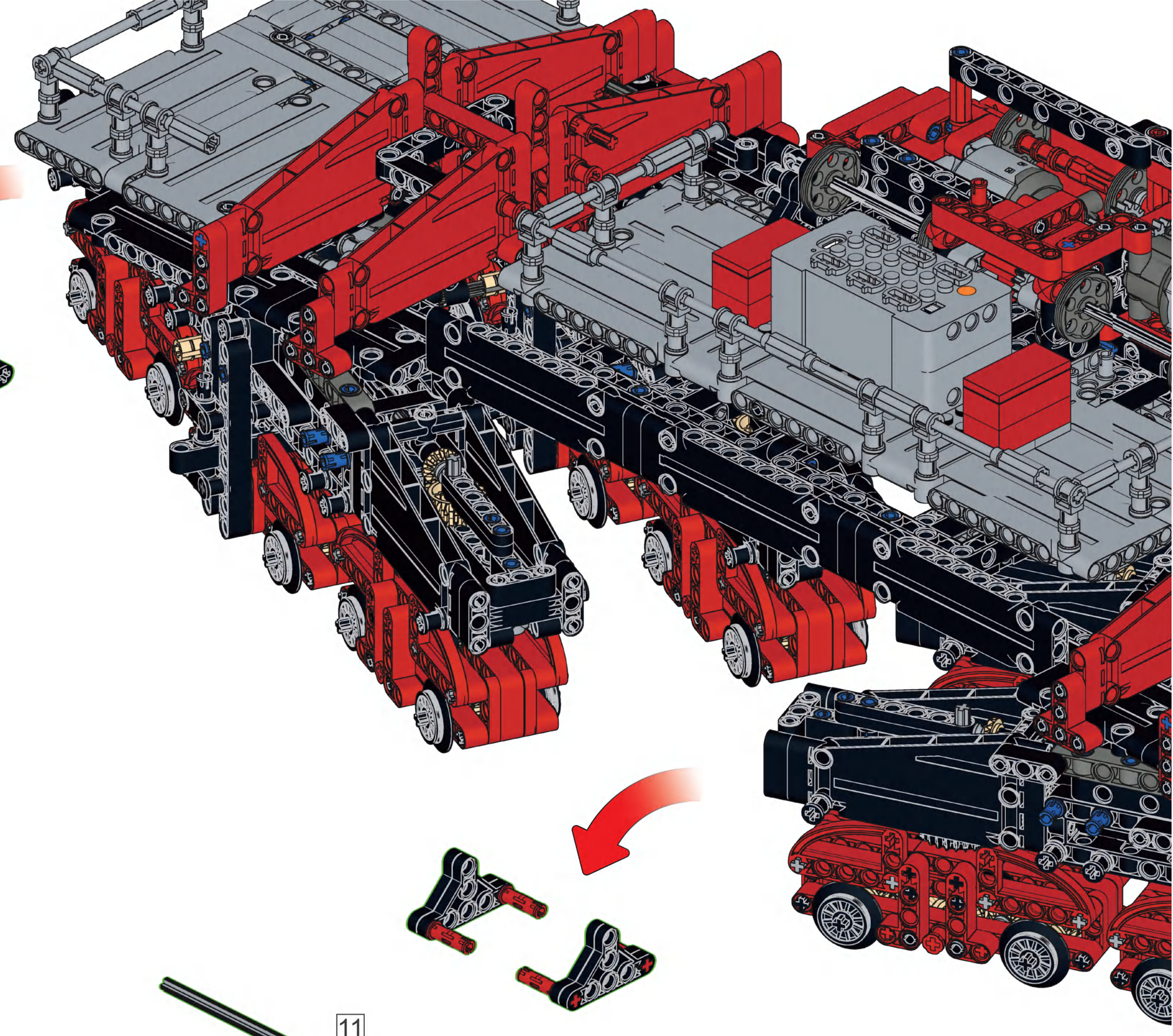



11

M57

1

M43

11

11

M56

2



M58

1

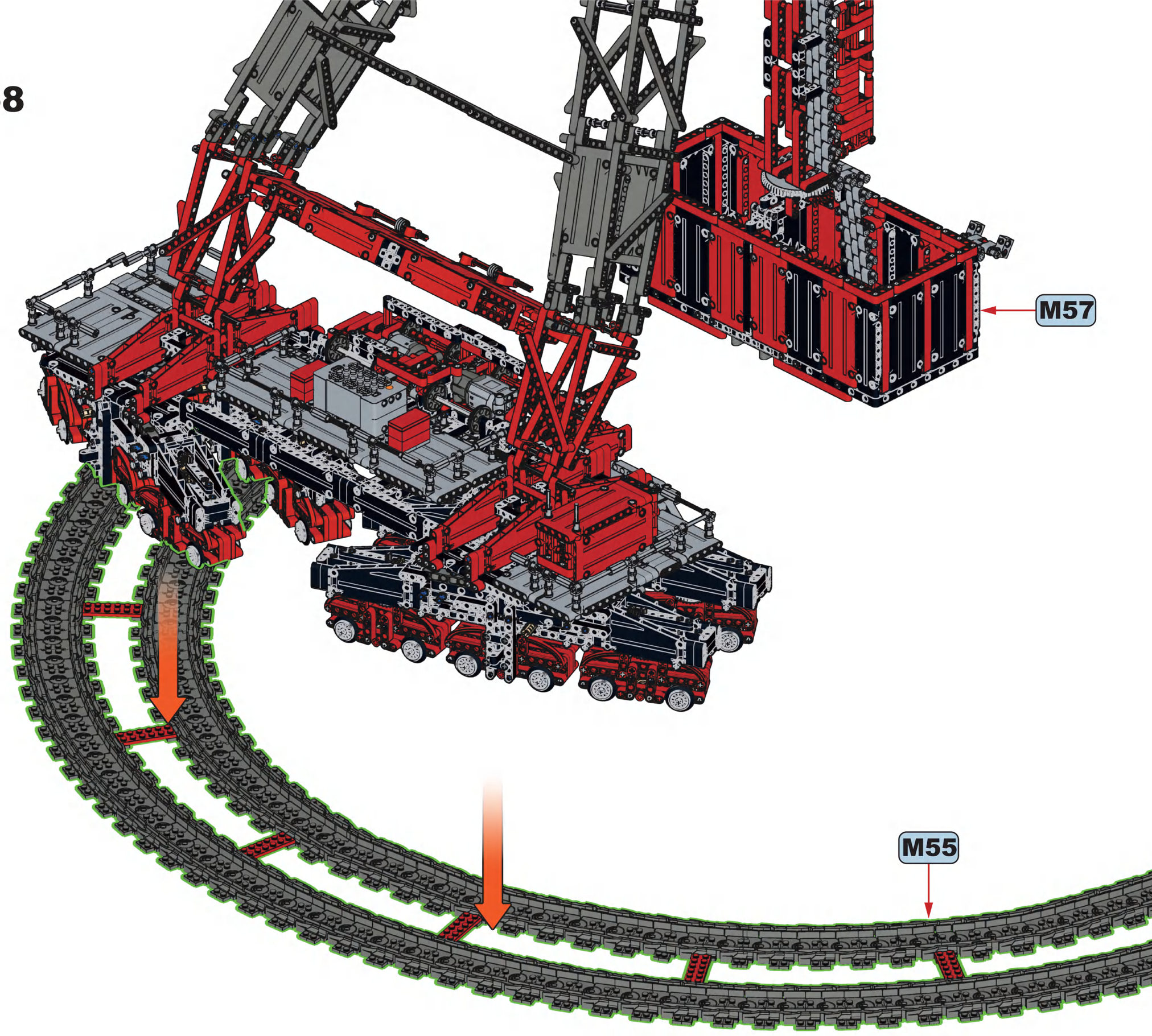

2

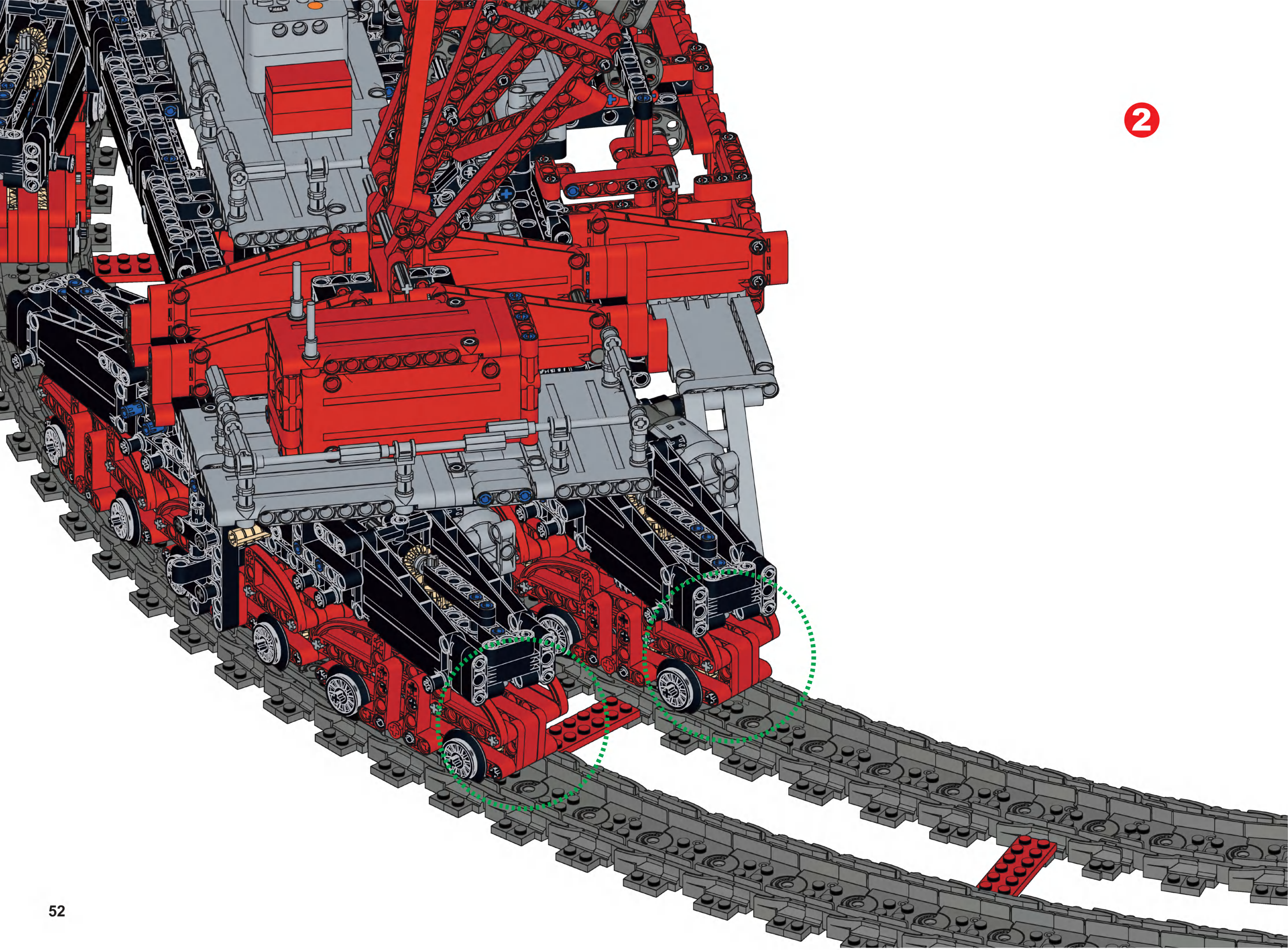

3

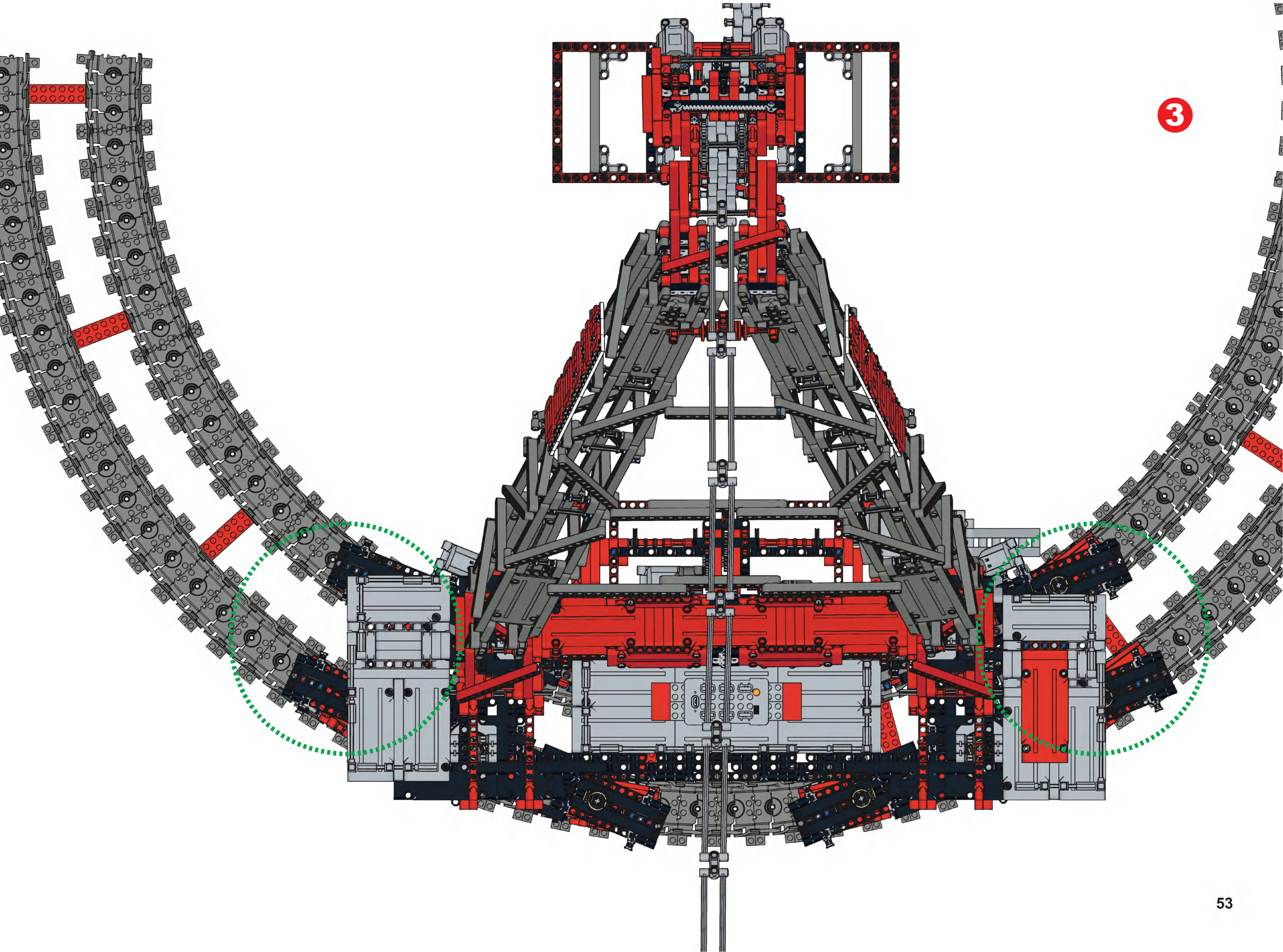

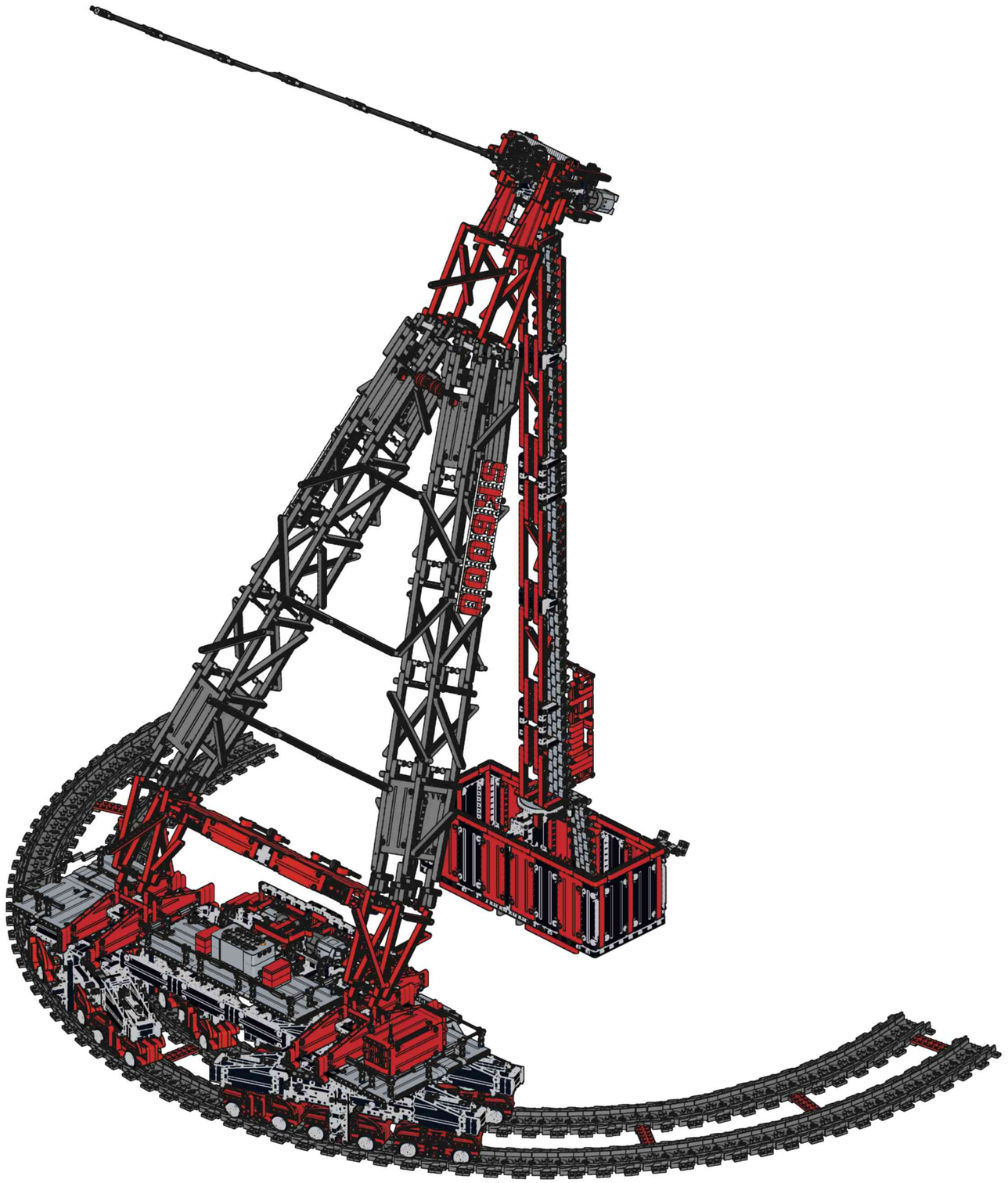

14

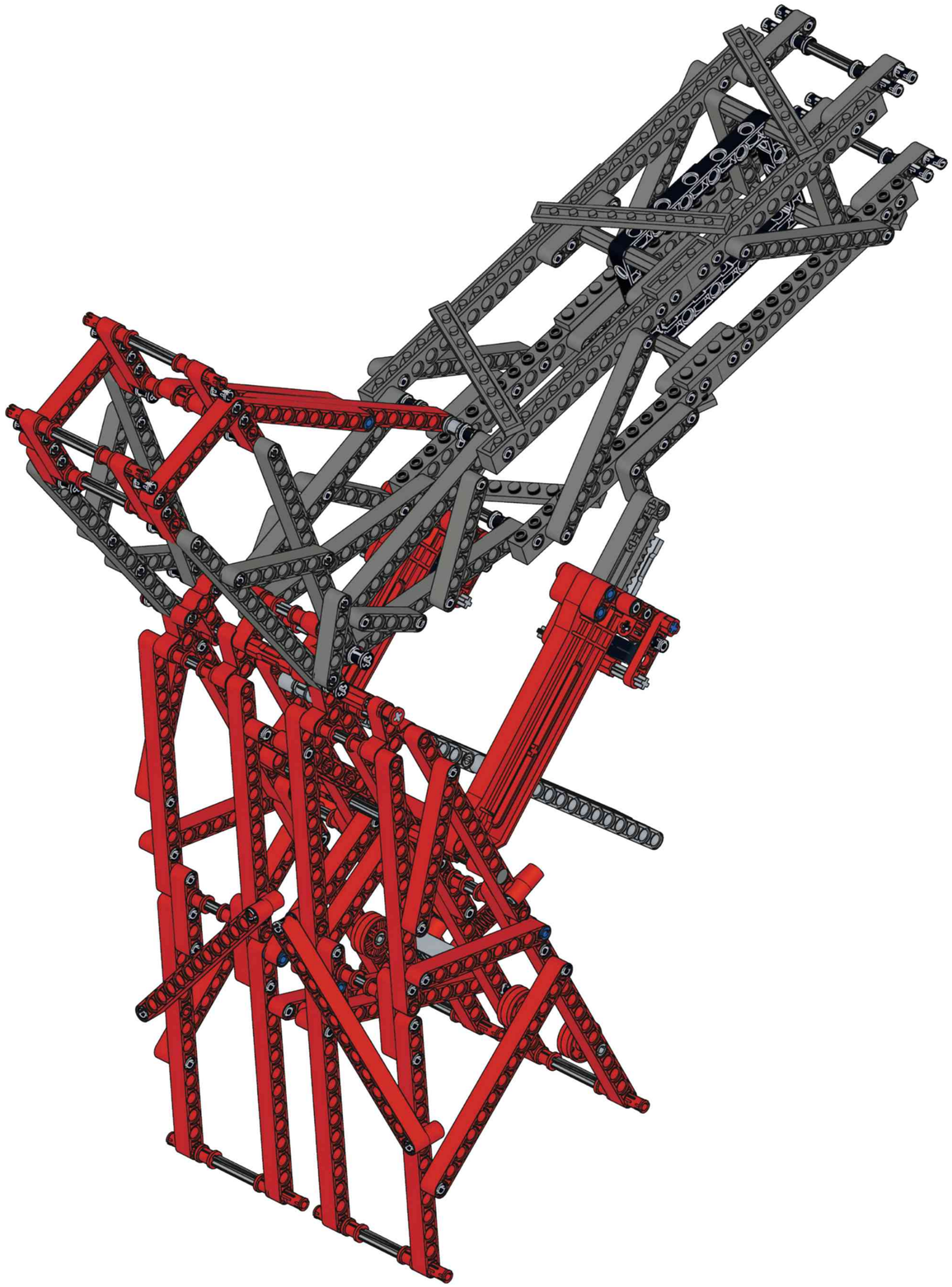

N

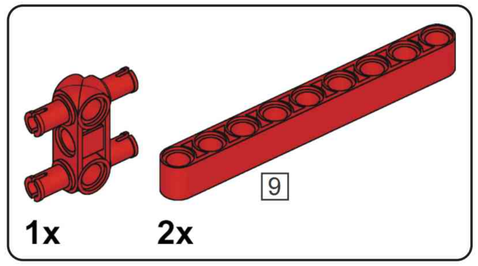

N1

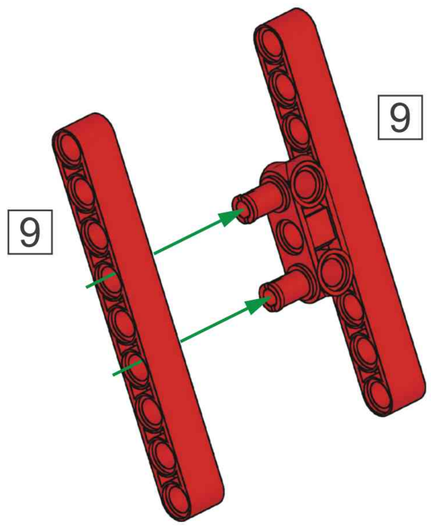

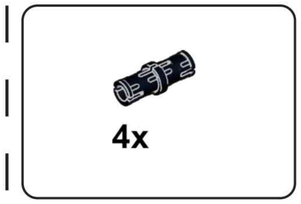

N2



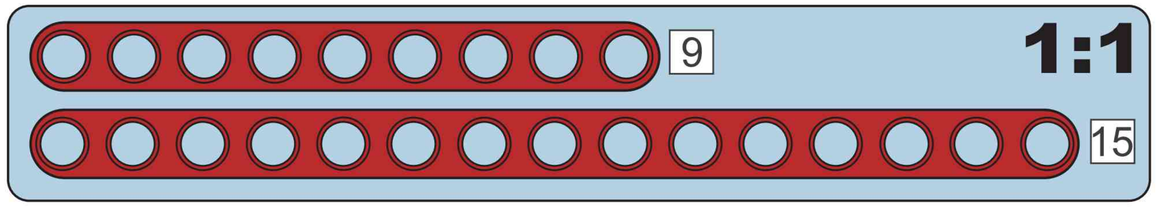

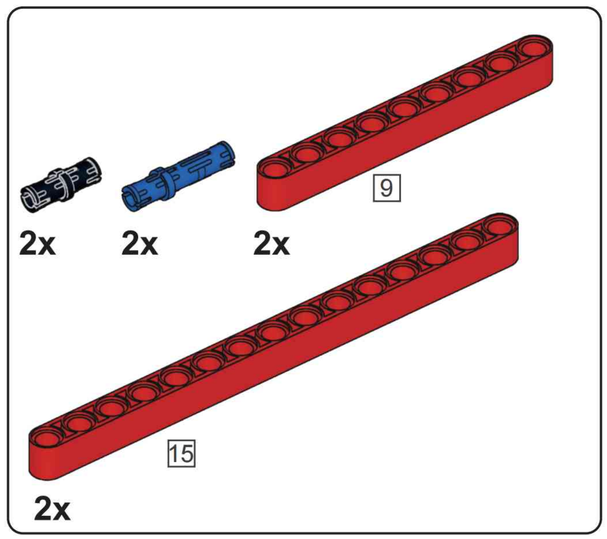

N3

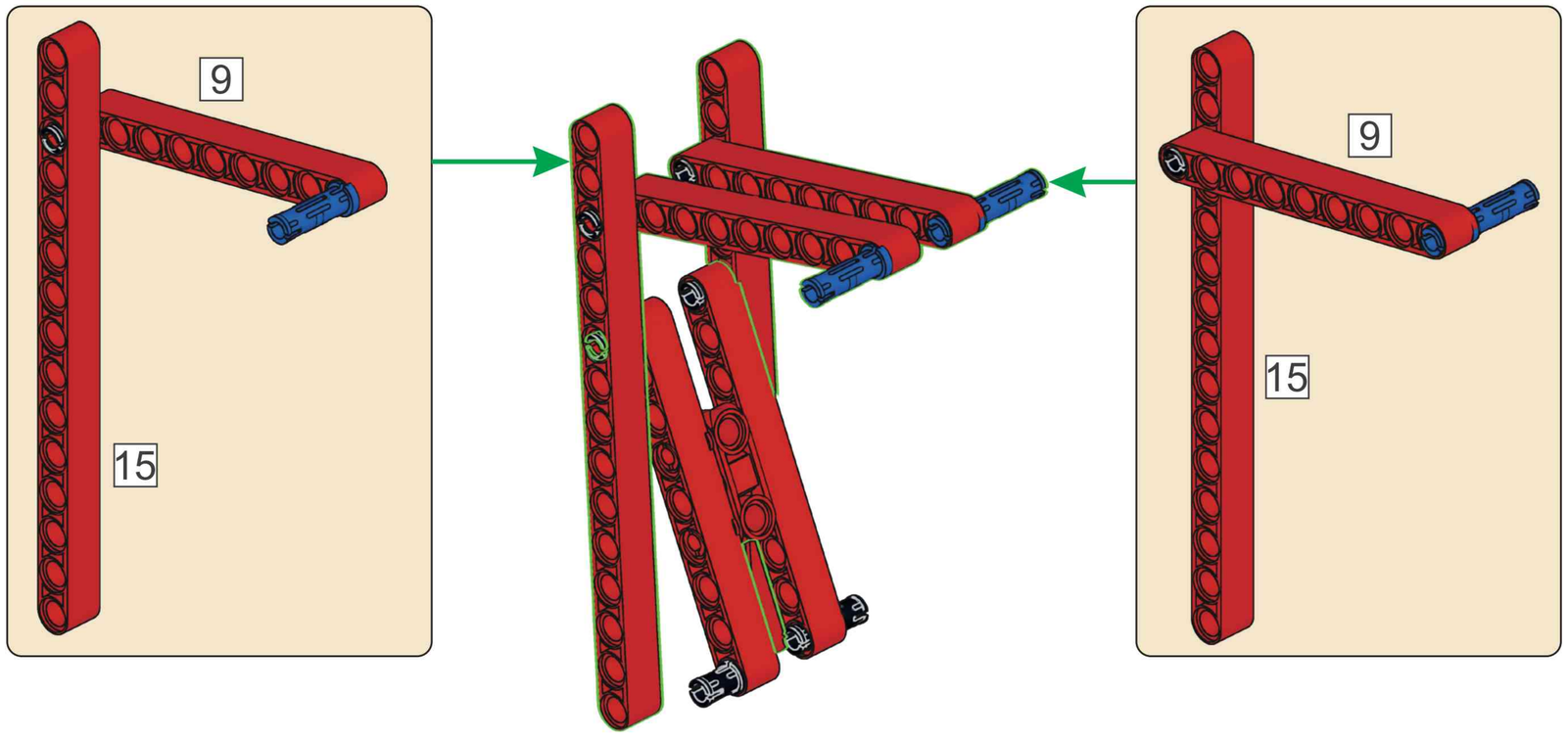

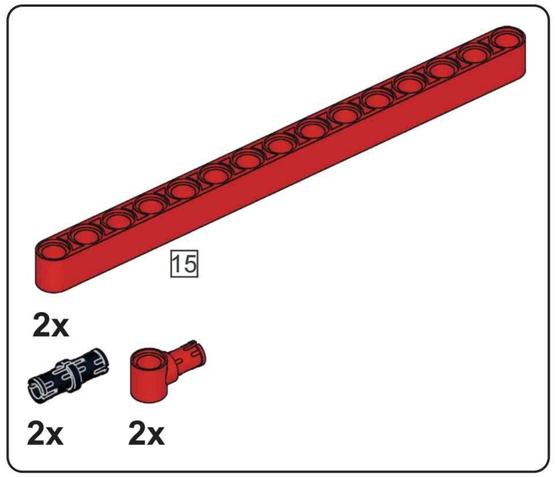

N4

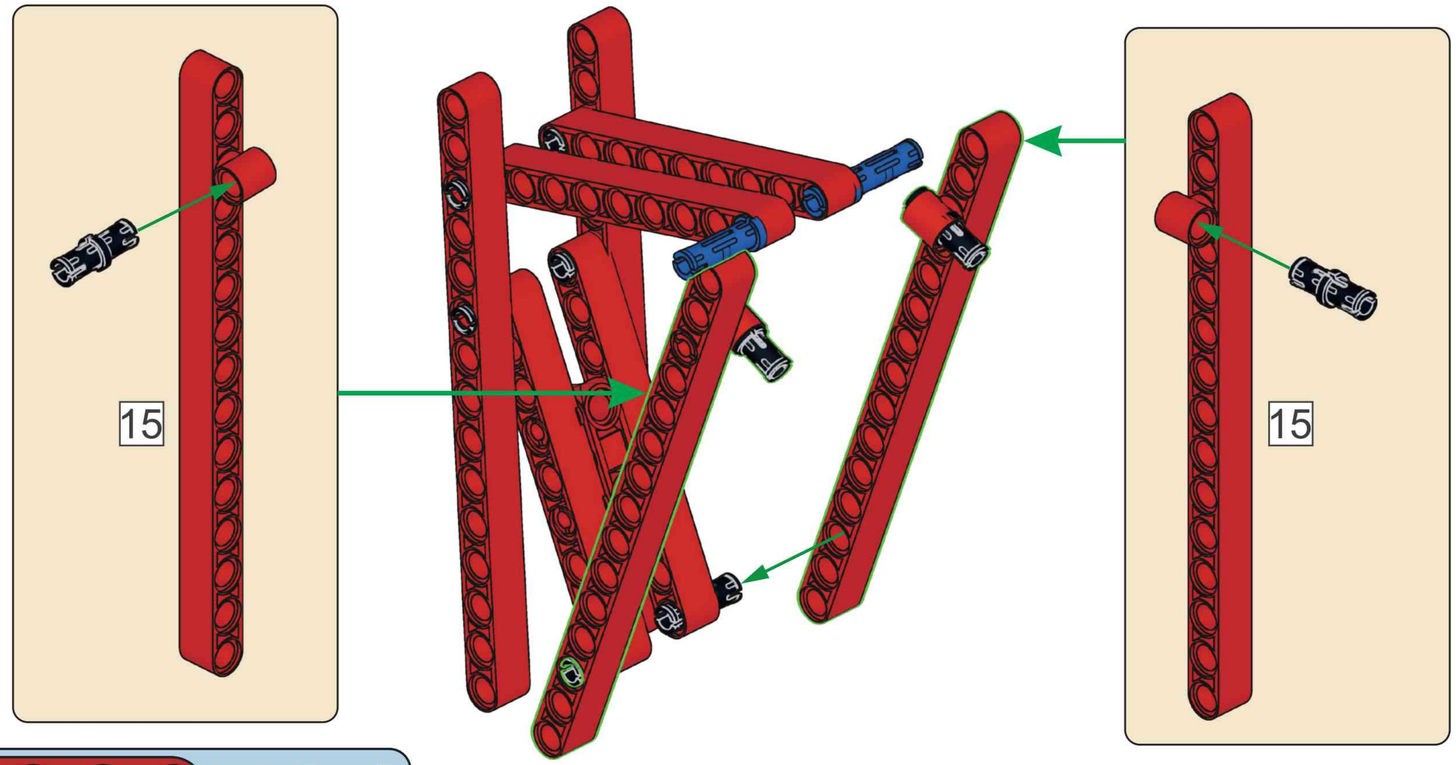

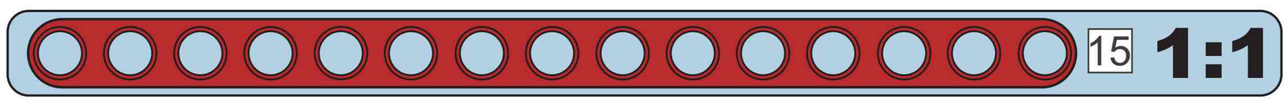

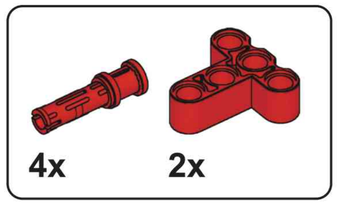

N5

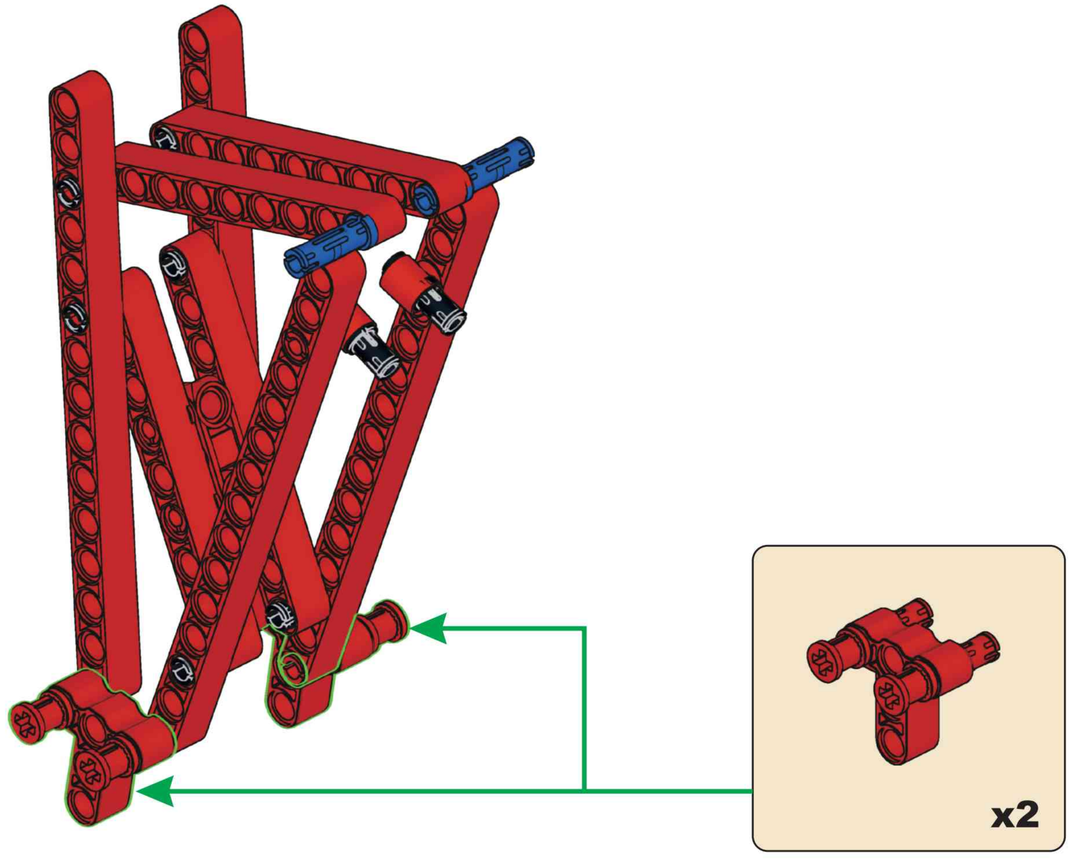

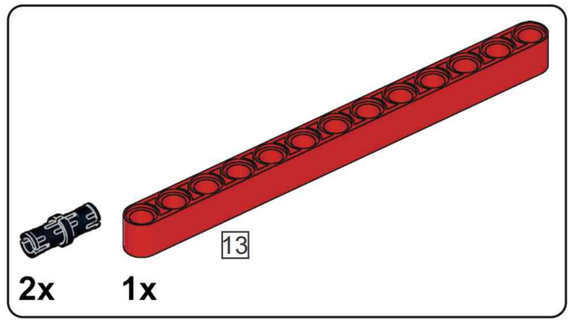

N6

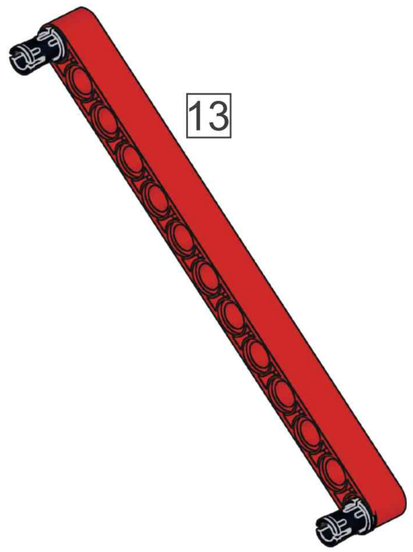

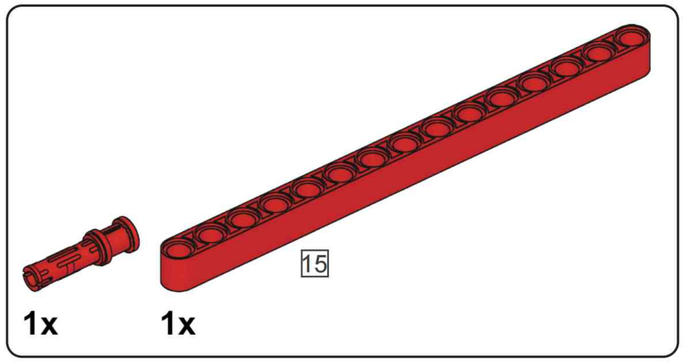

N7

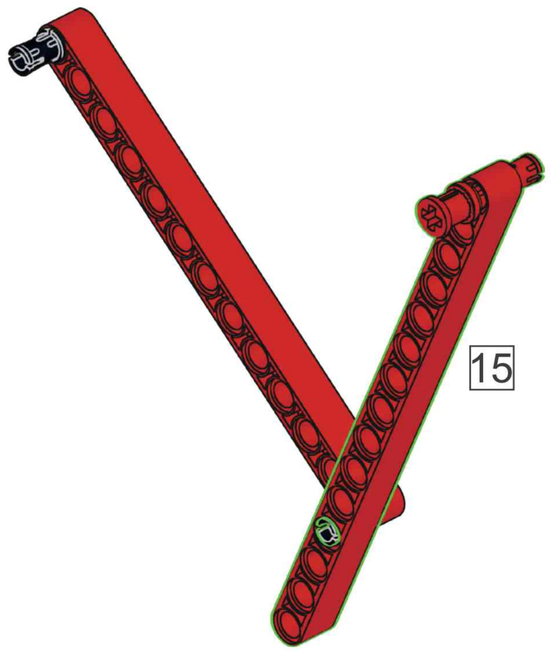

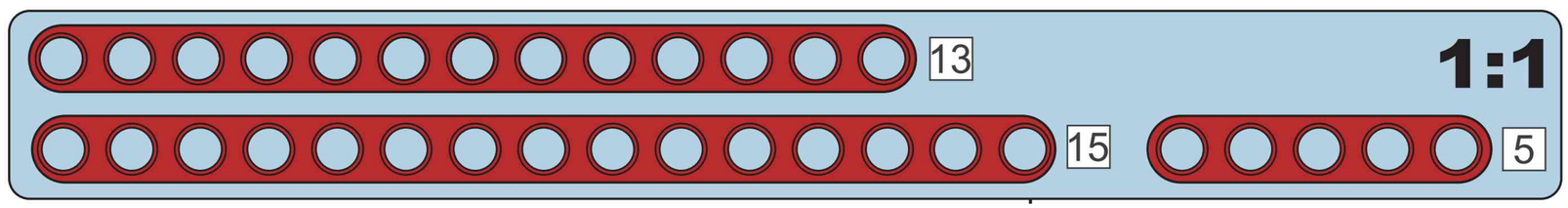

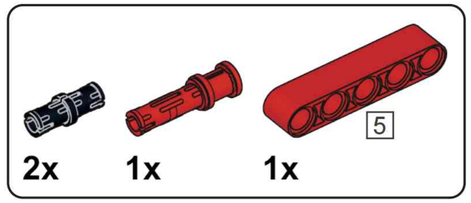

N8

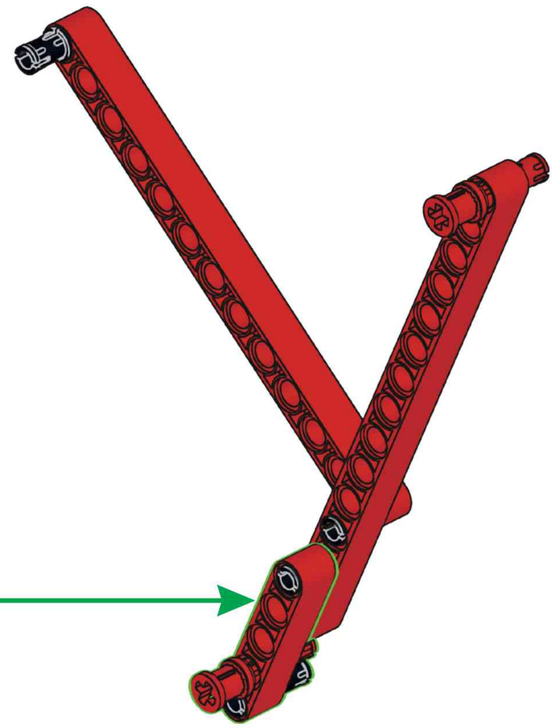

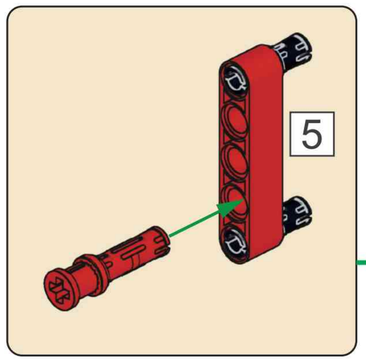

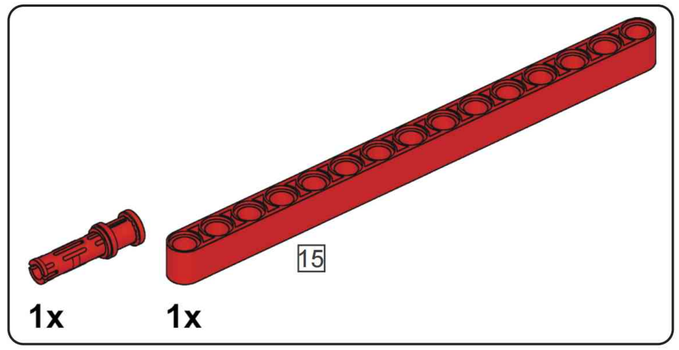

N9

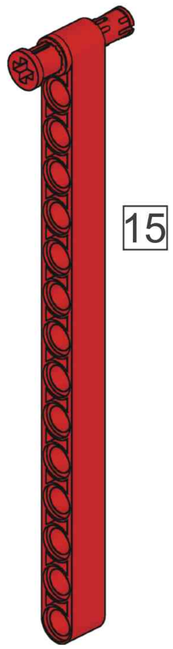

1x 1x 1x 1x

N10

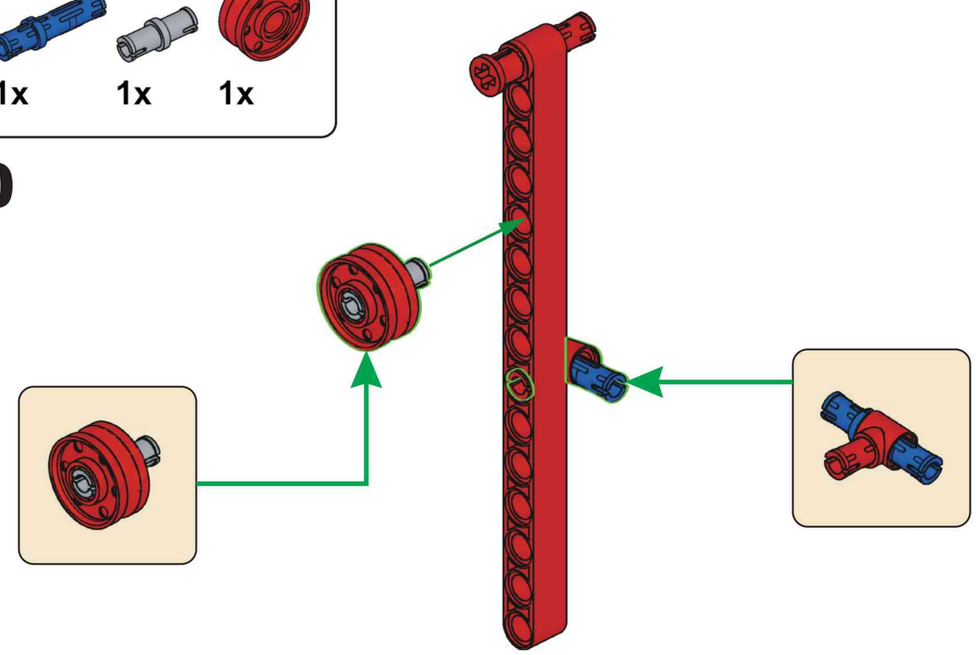

2x 1x 1x 5

N11

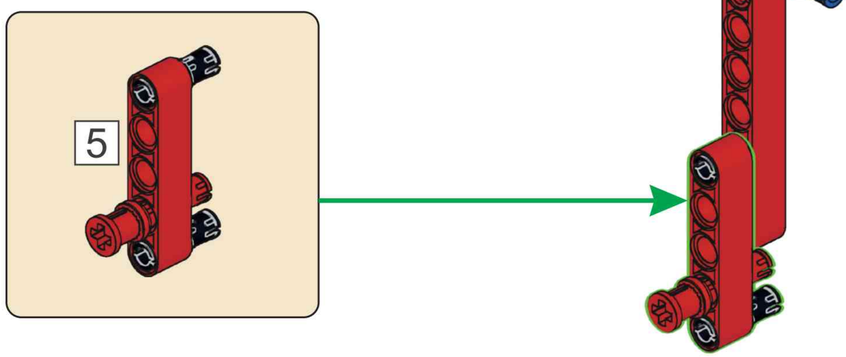

13 5 1:1

N12

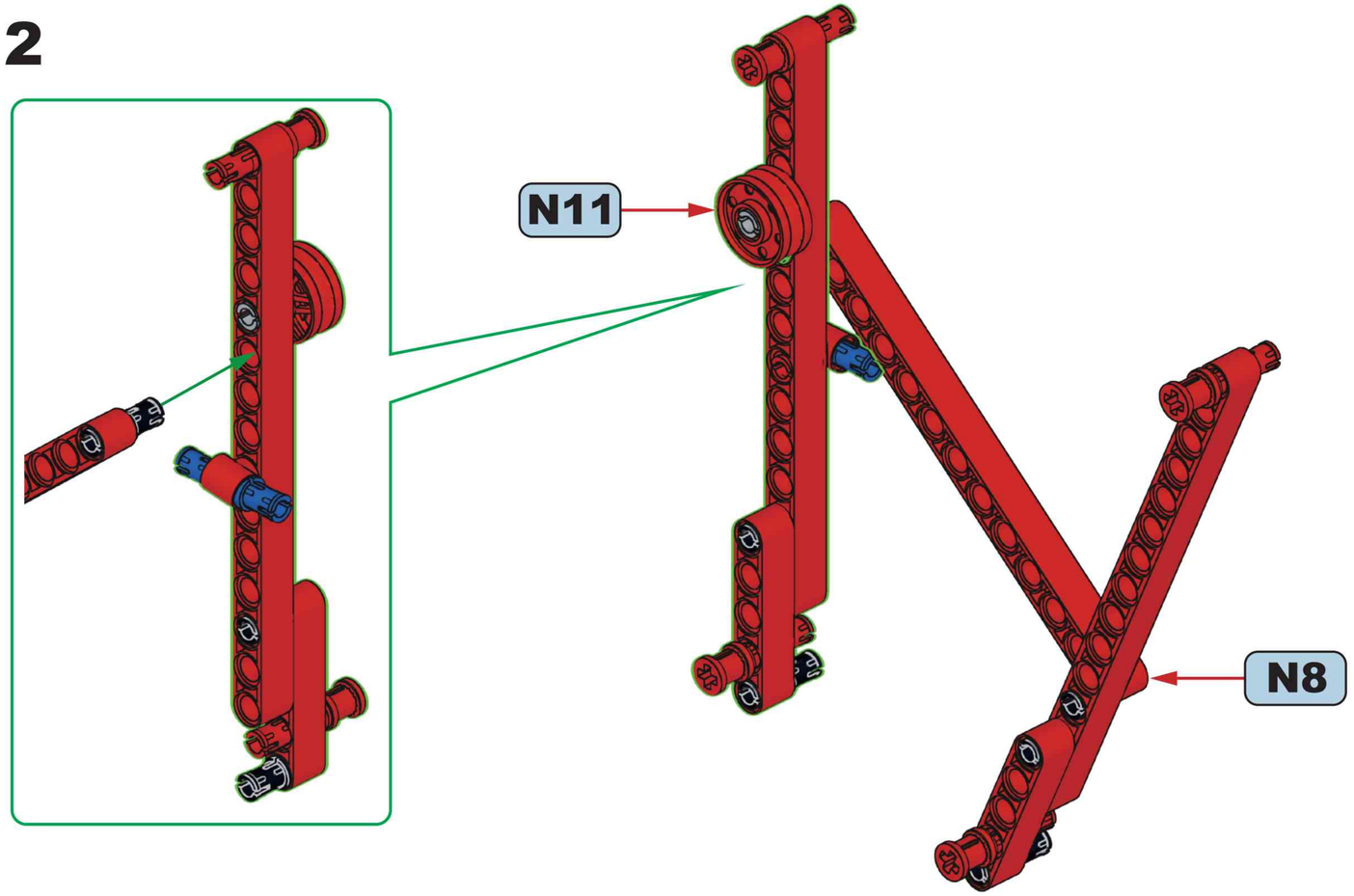

2x 1x 13

N13

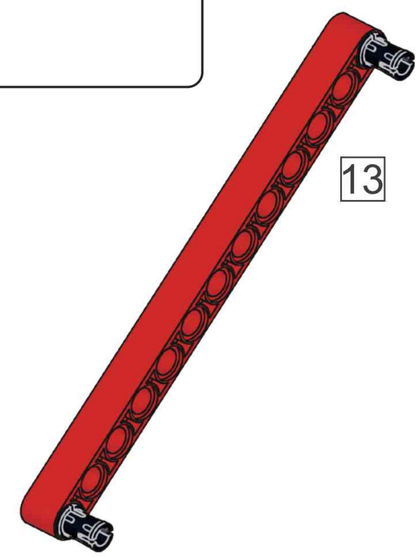

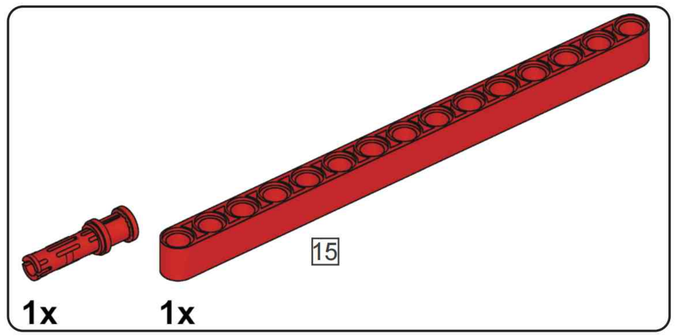

N14

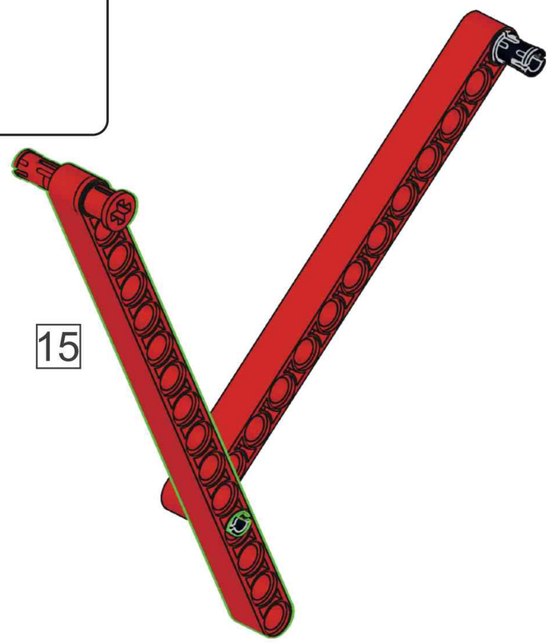

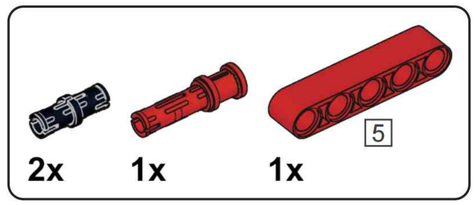

N15

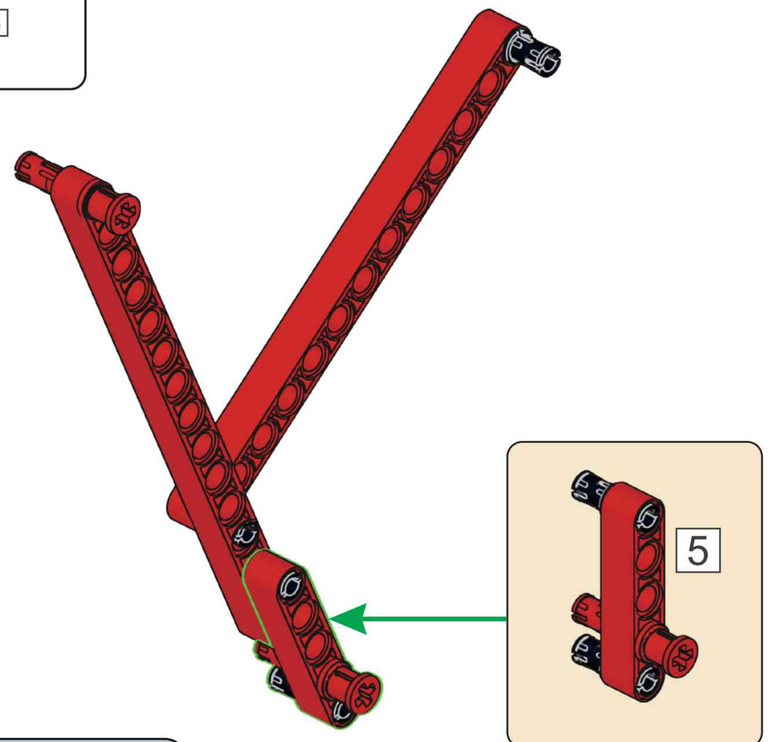

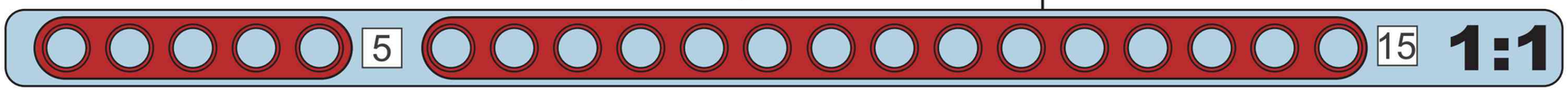

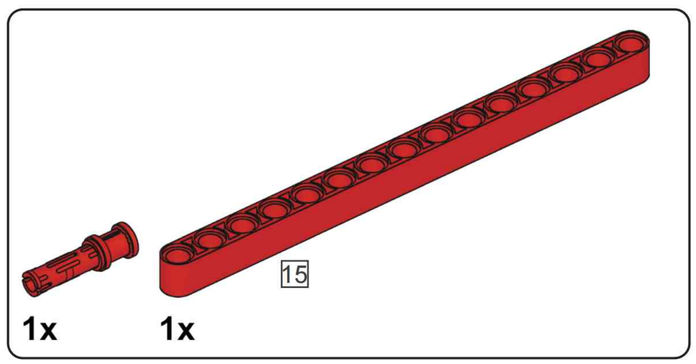

N16

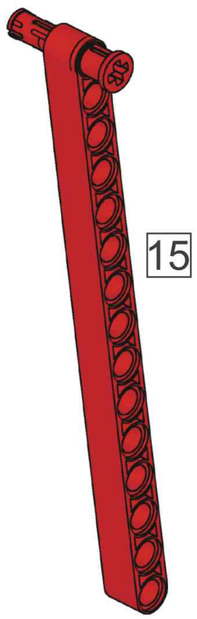

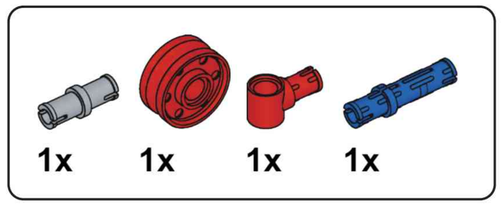

N17

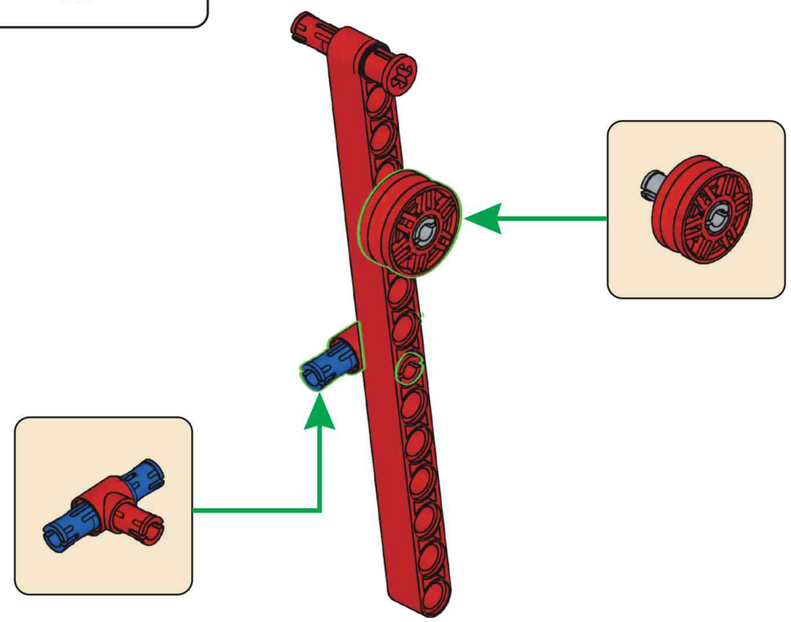

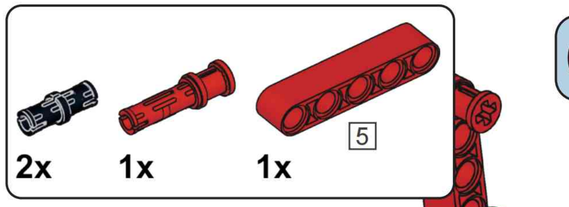

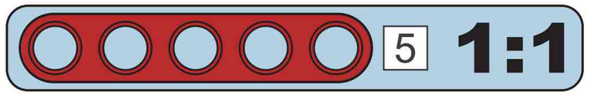

N18

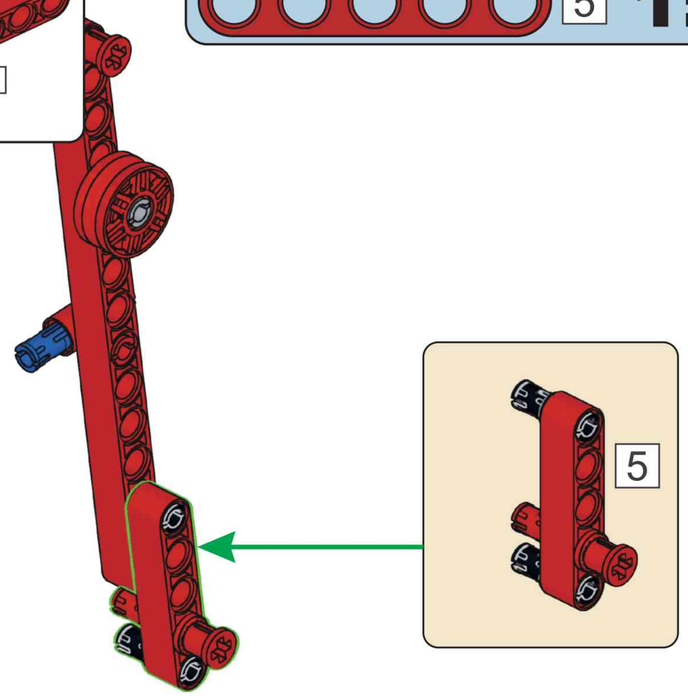

N19

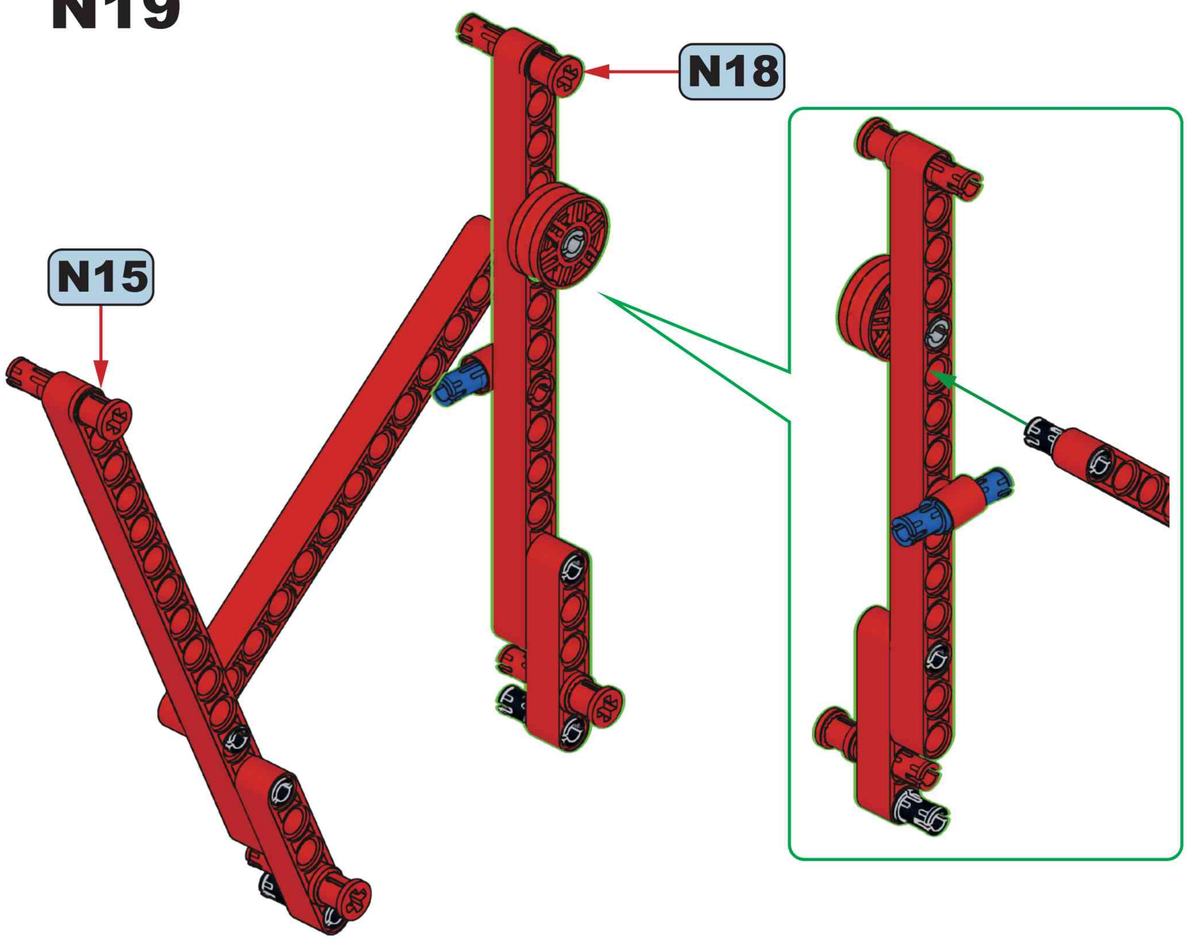

N20

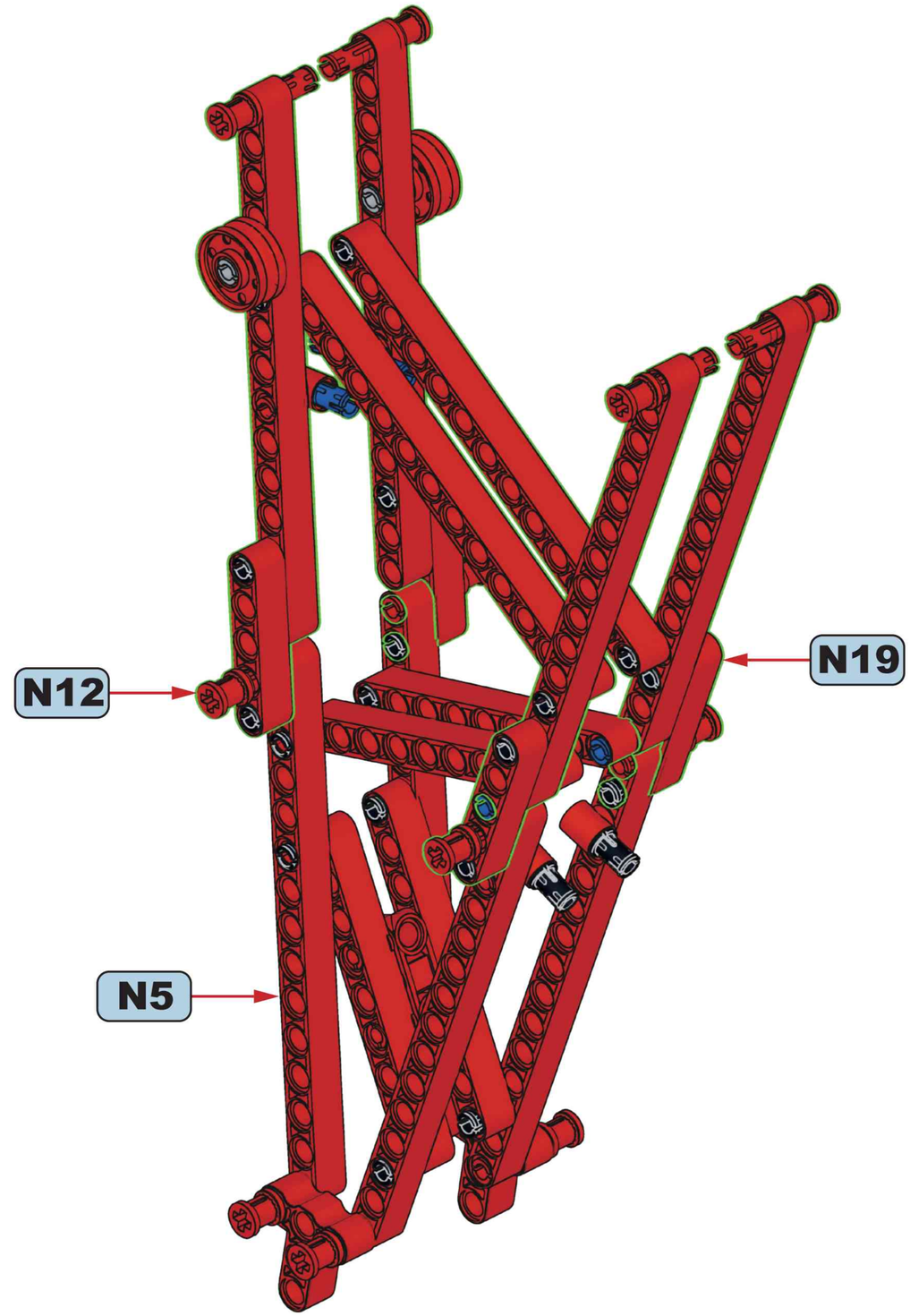

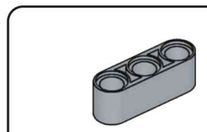

1x

N21

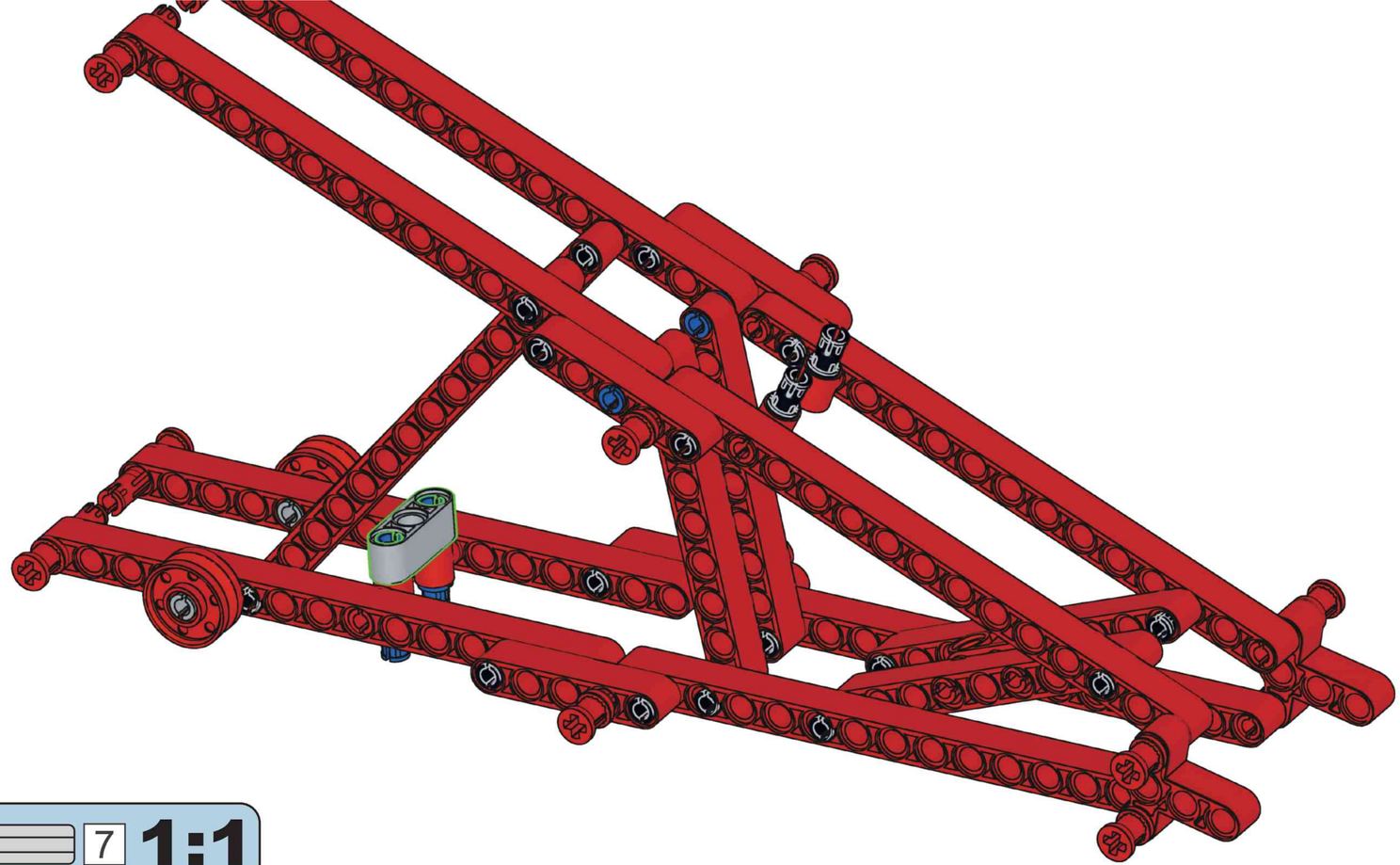

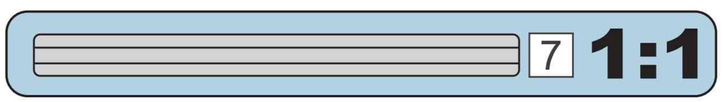

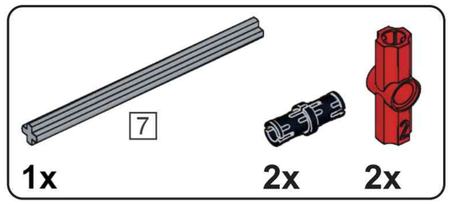

N22

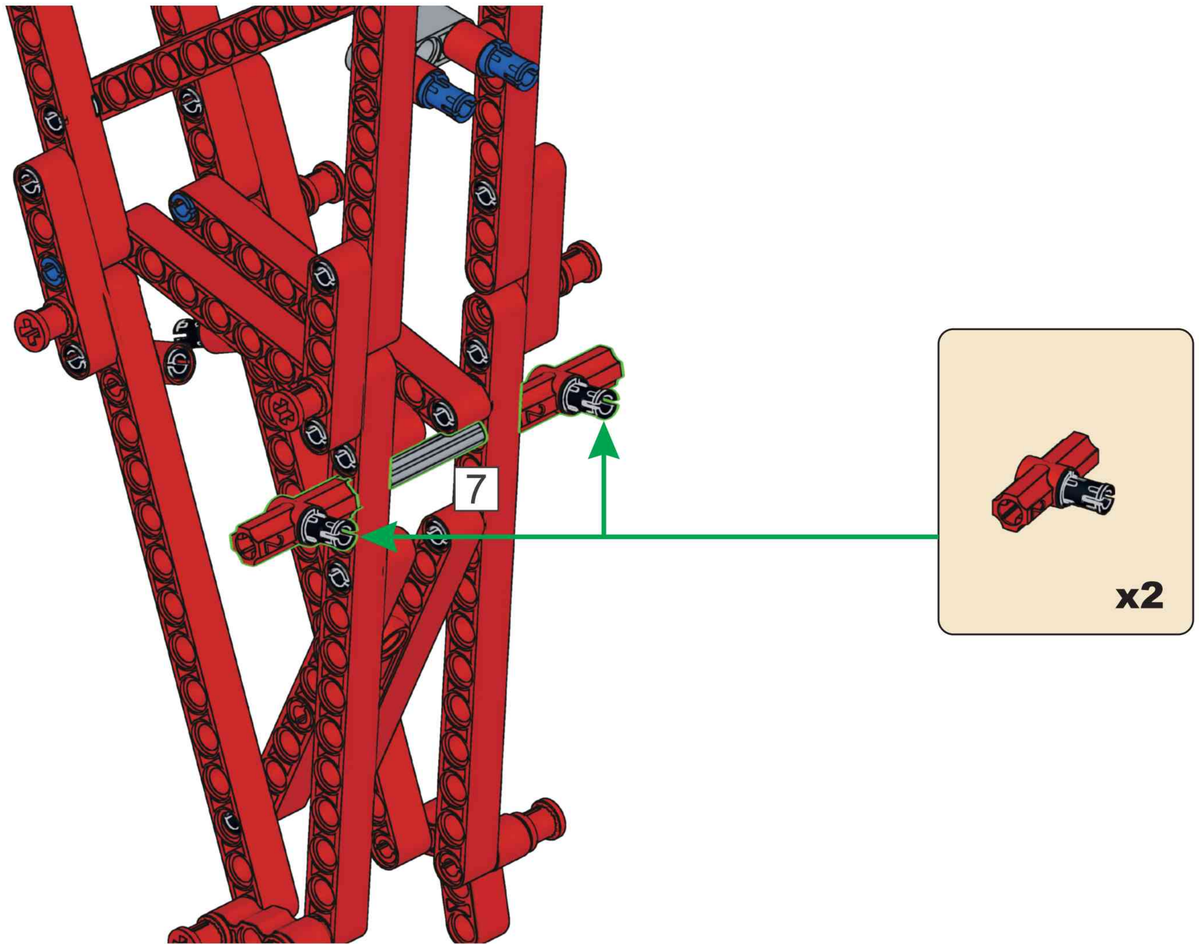

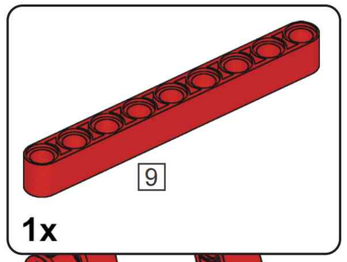

N23

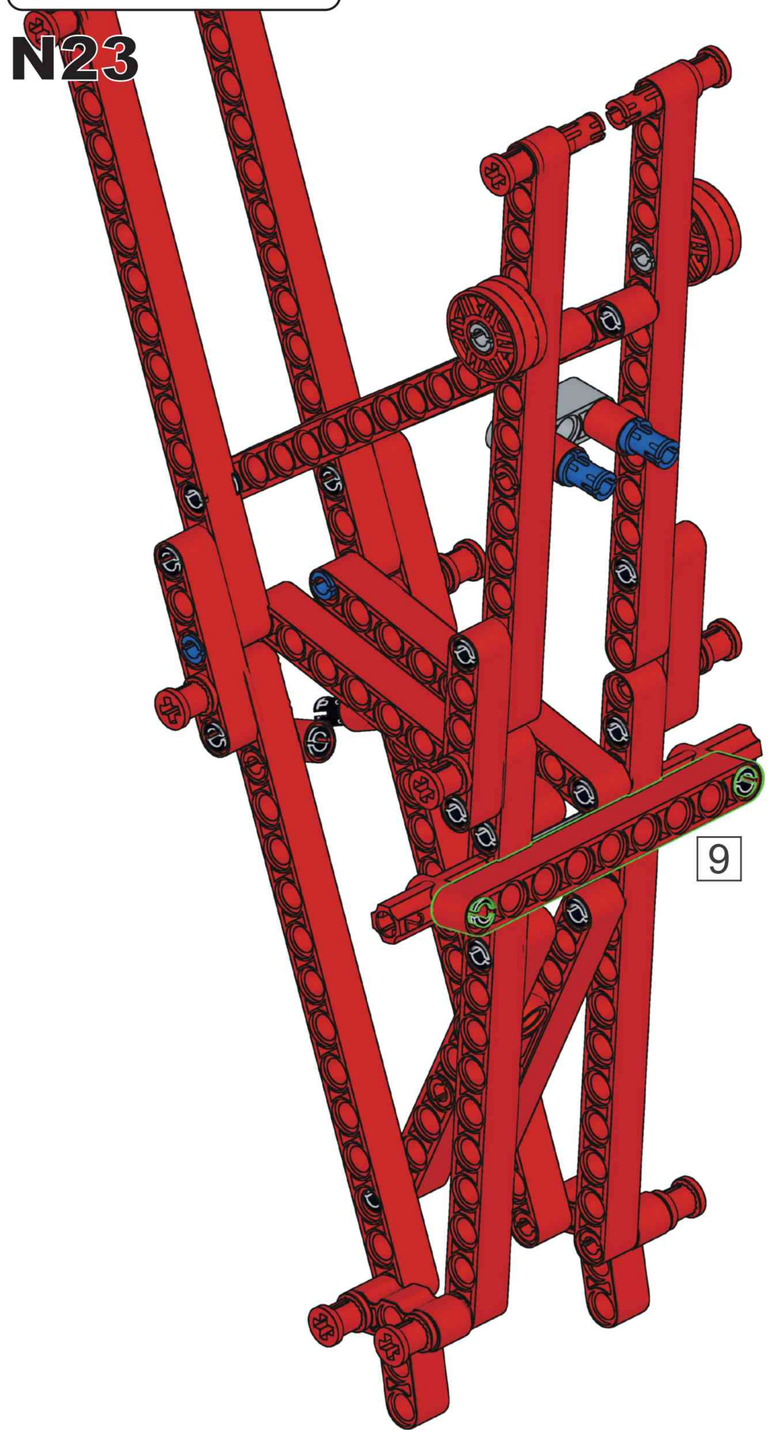

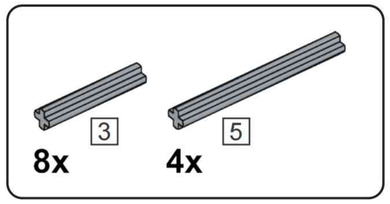

N24

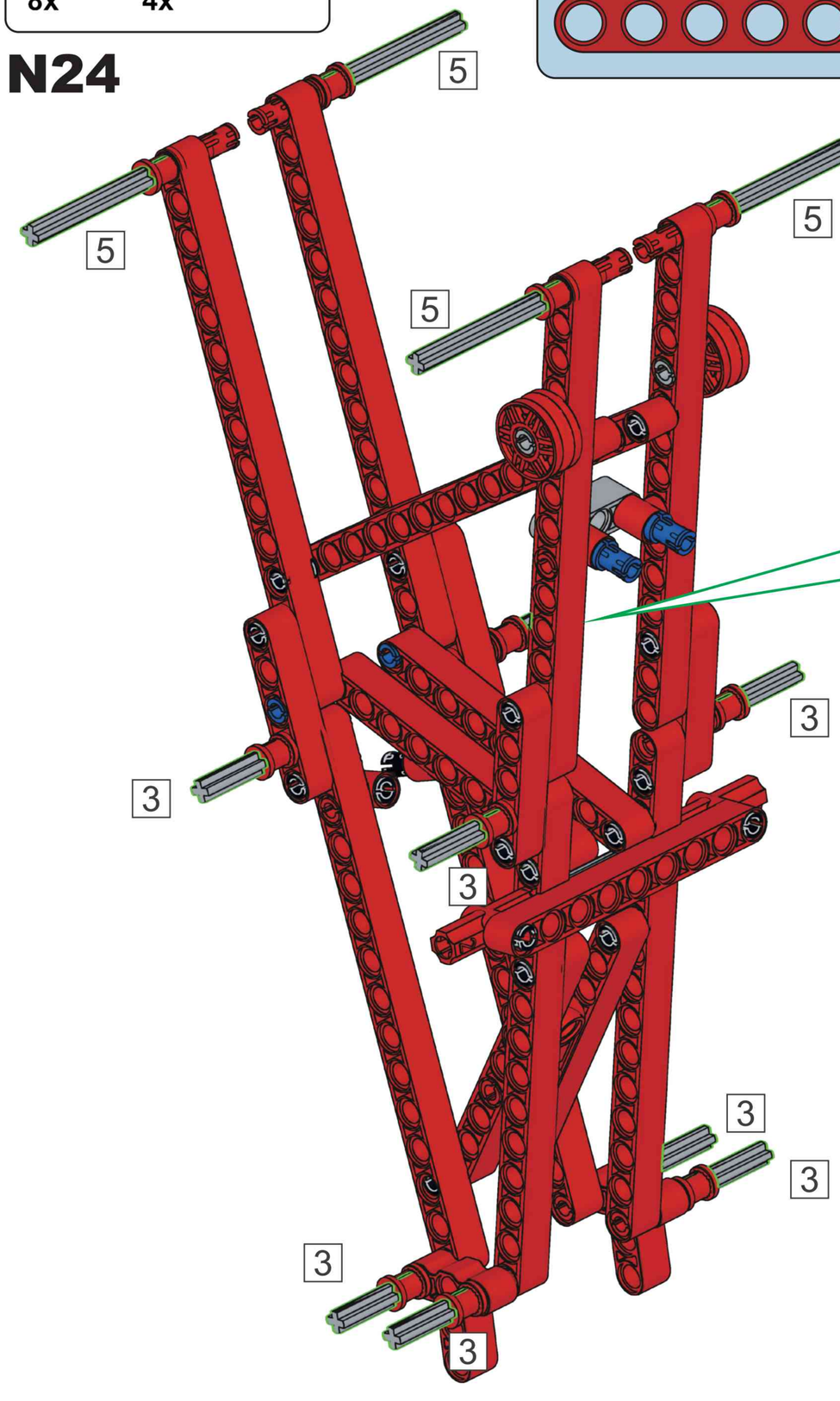

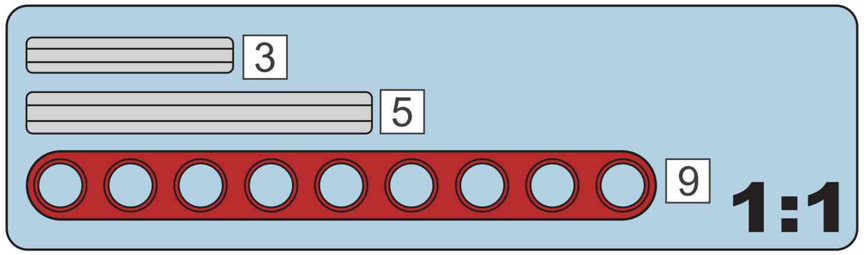

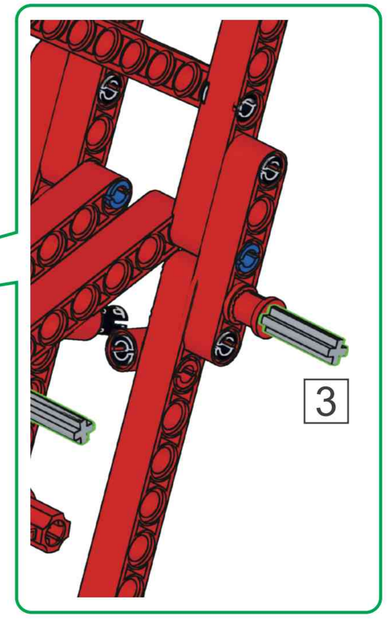

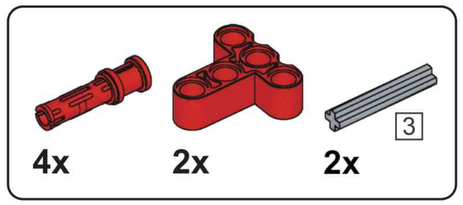

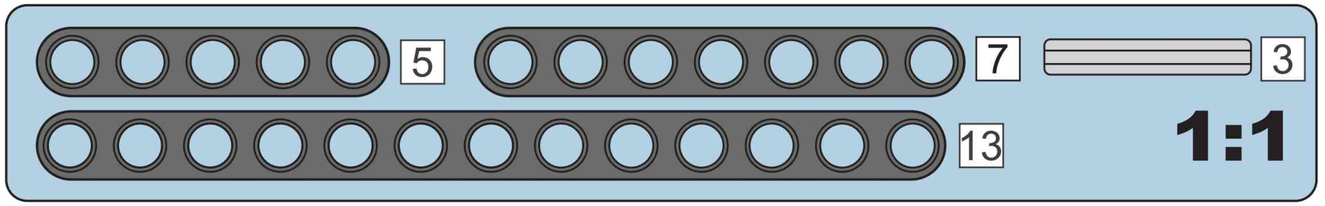

N25

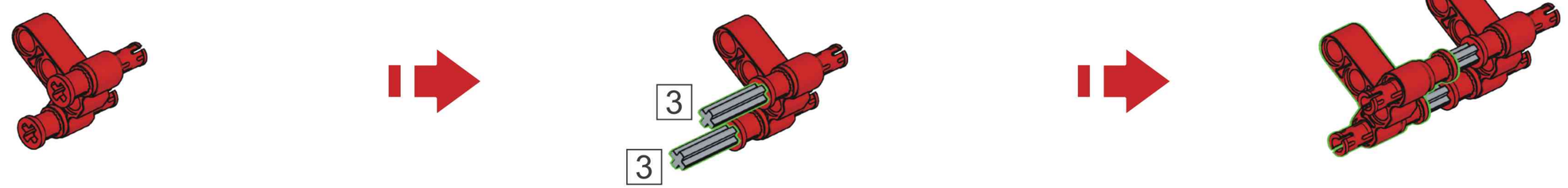

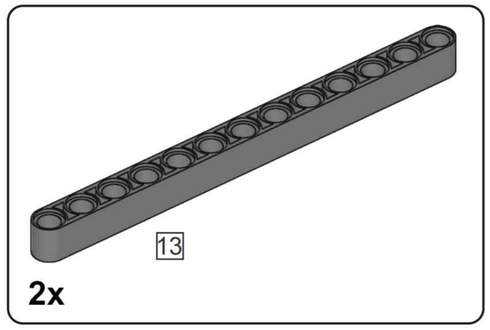

N26

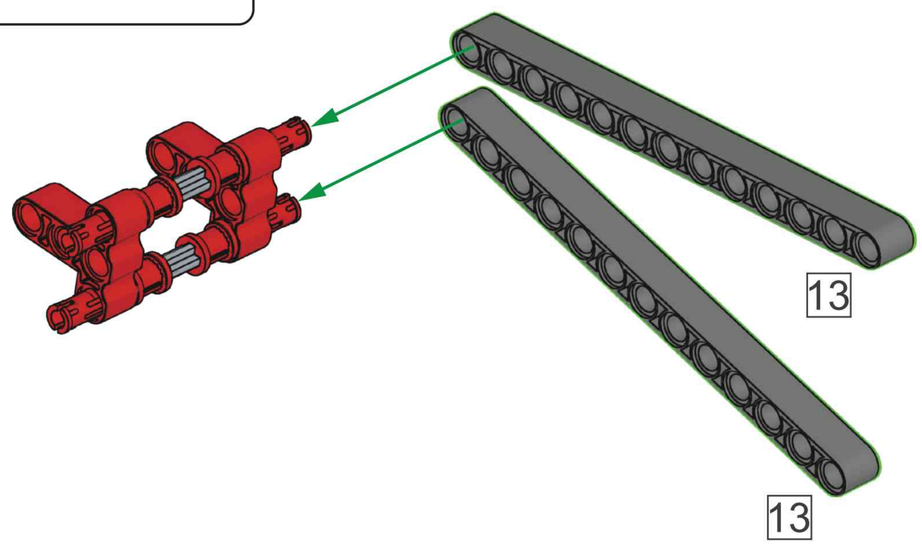

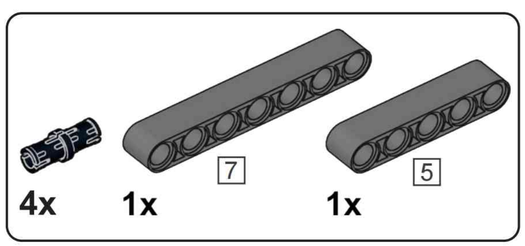

N27

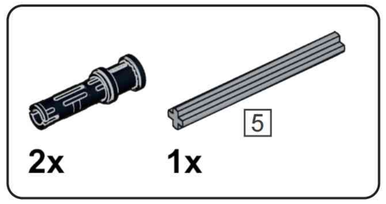

N28



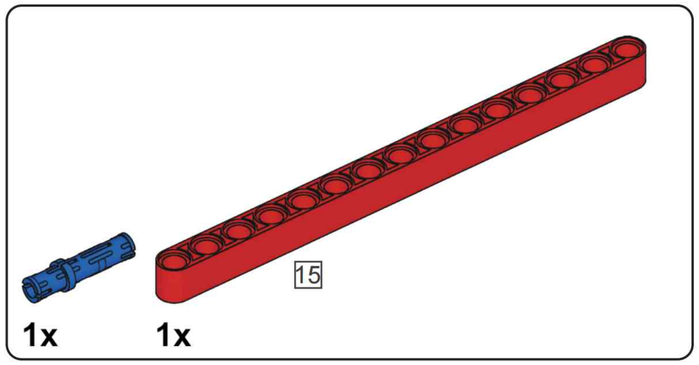

N29

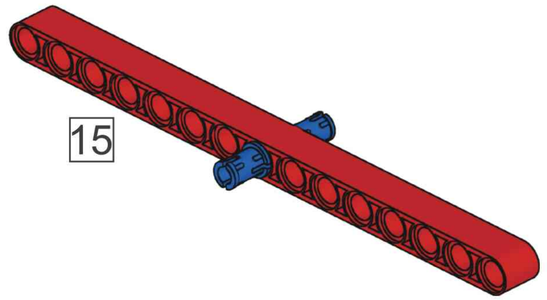

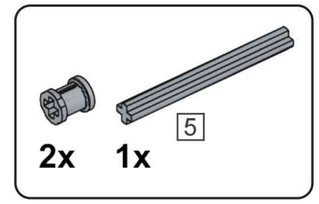

N30

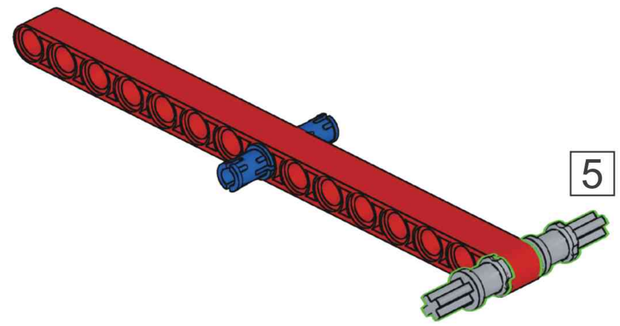

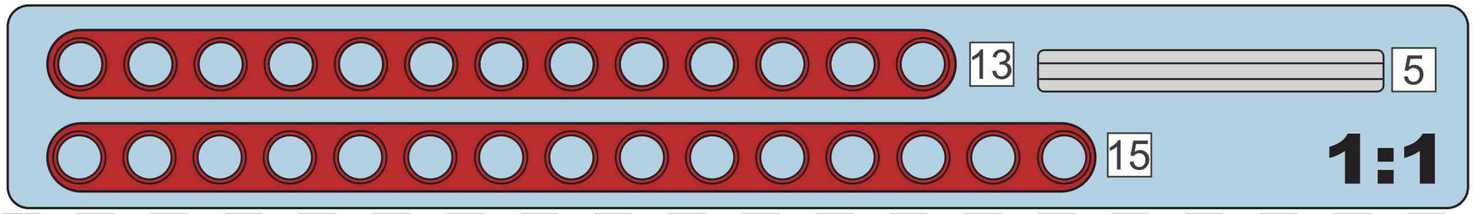

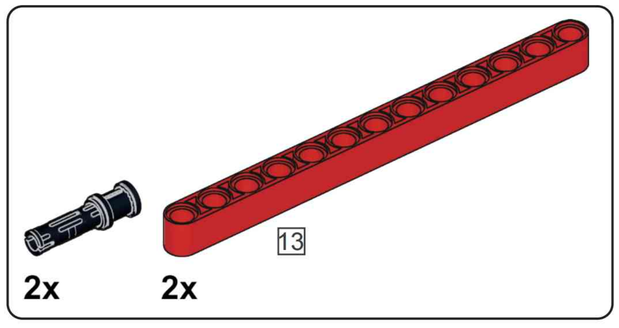

N31

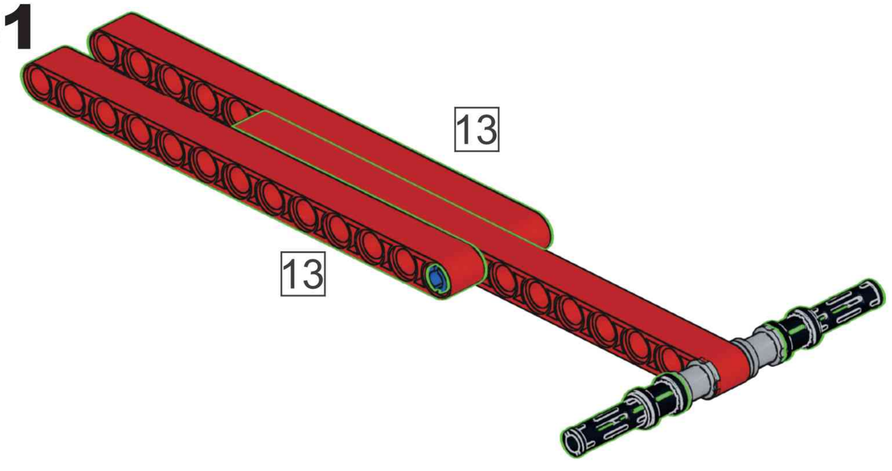

N32

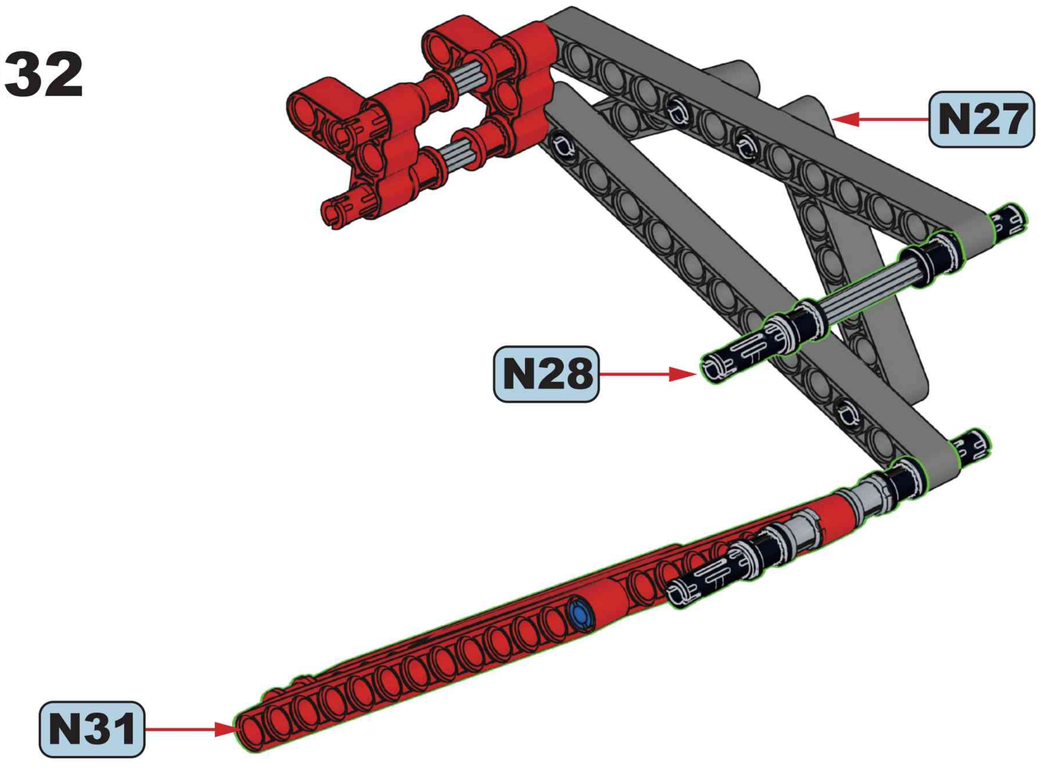

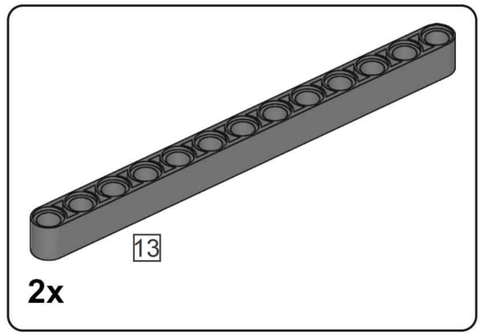

N33

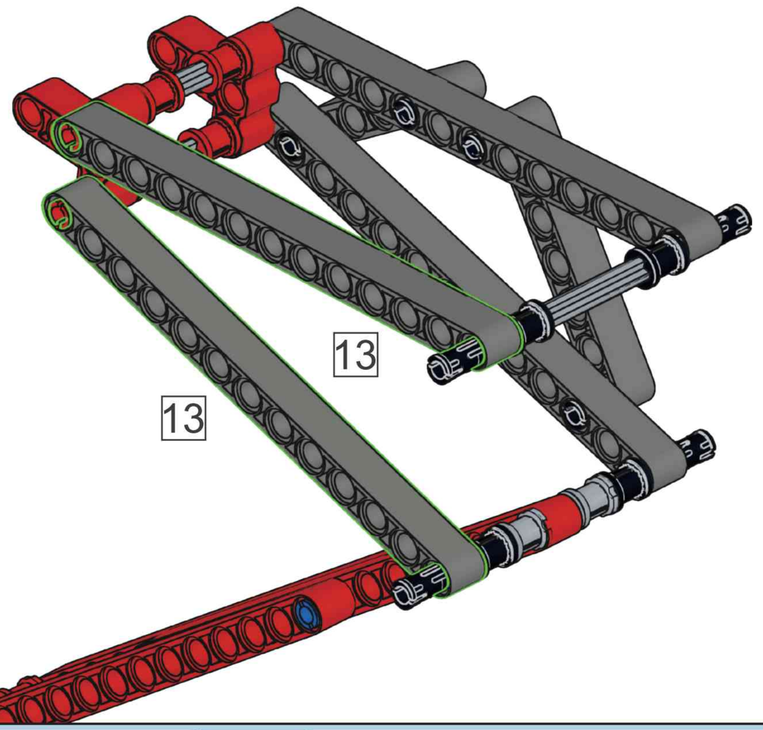

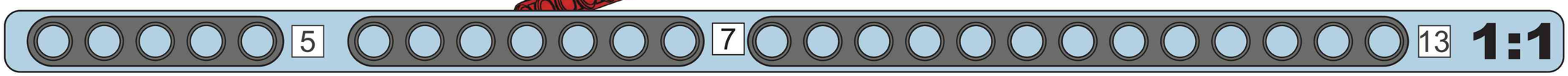

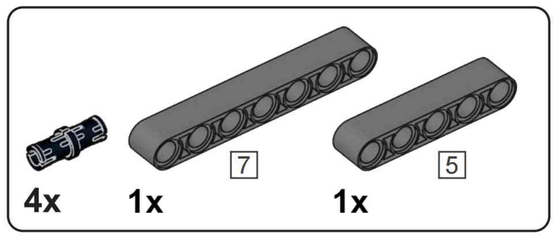

N34

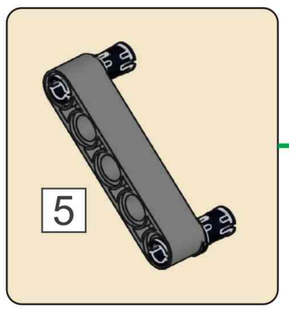

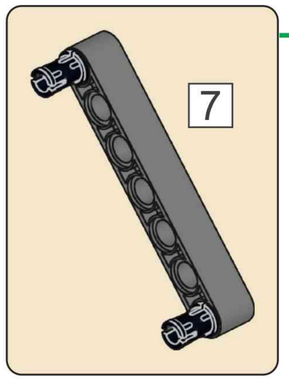

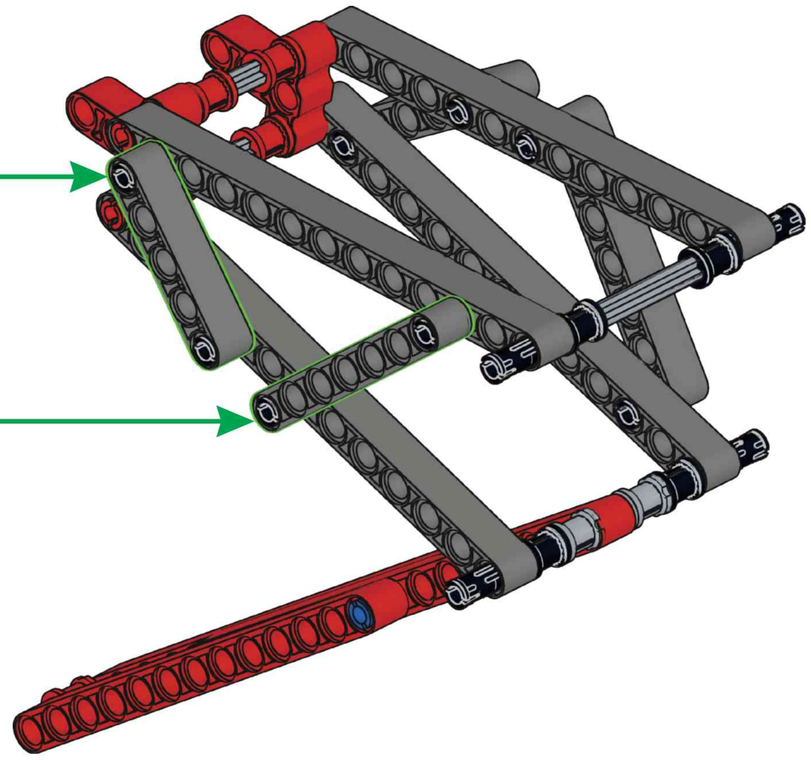

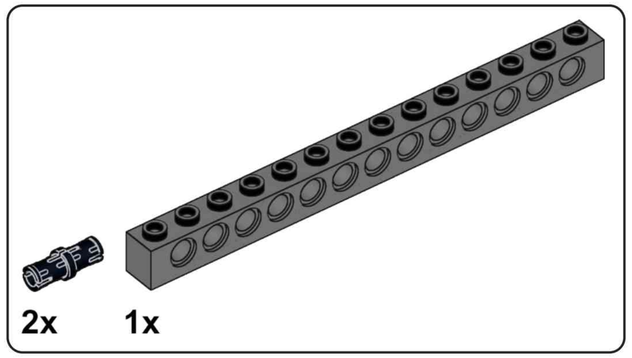

N35

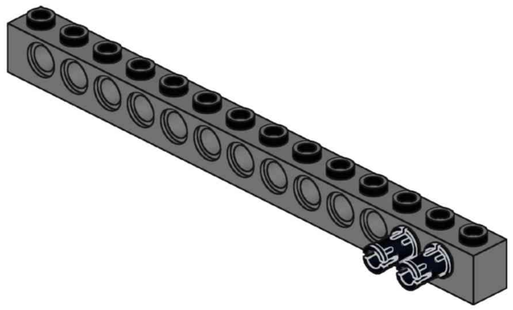

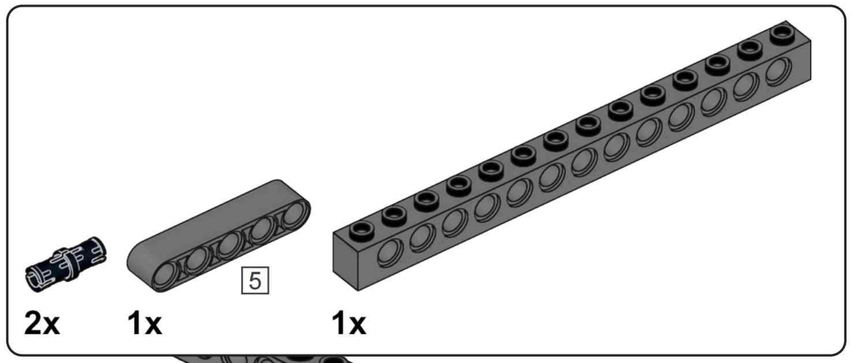

N36

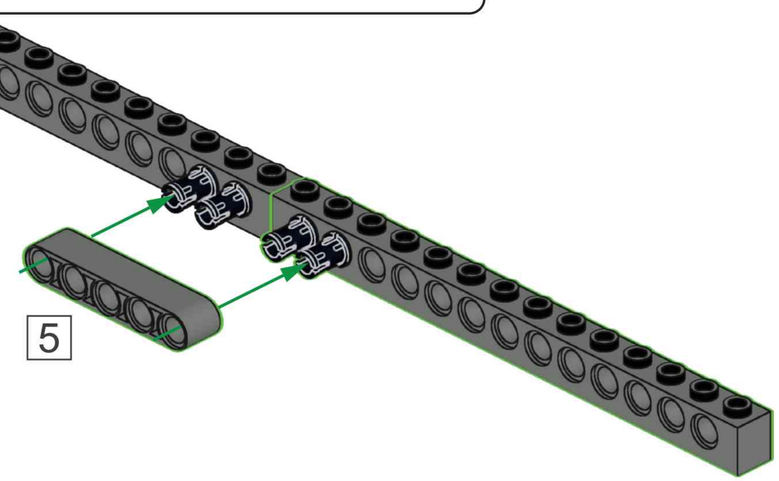

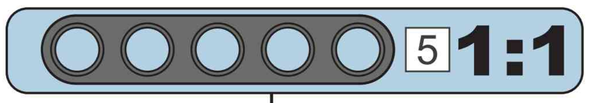

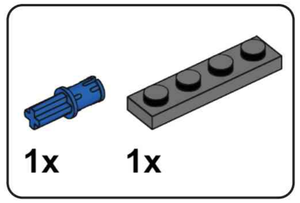

N37

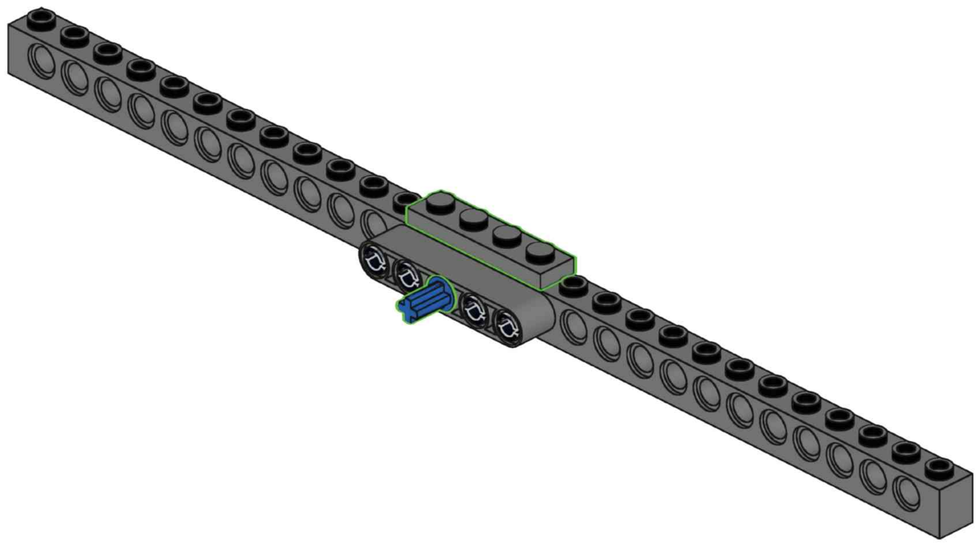

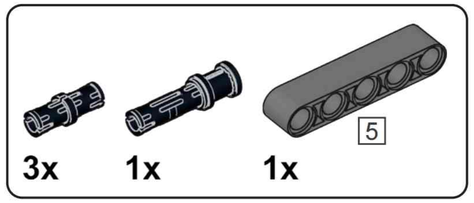

N38

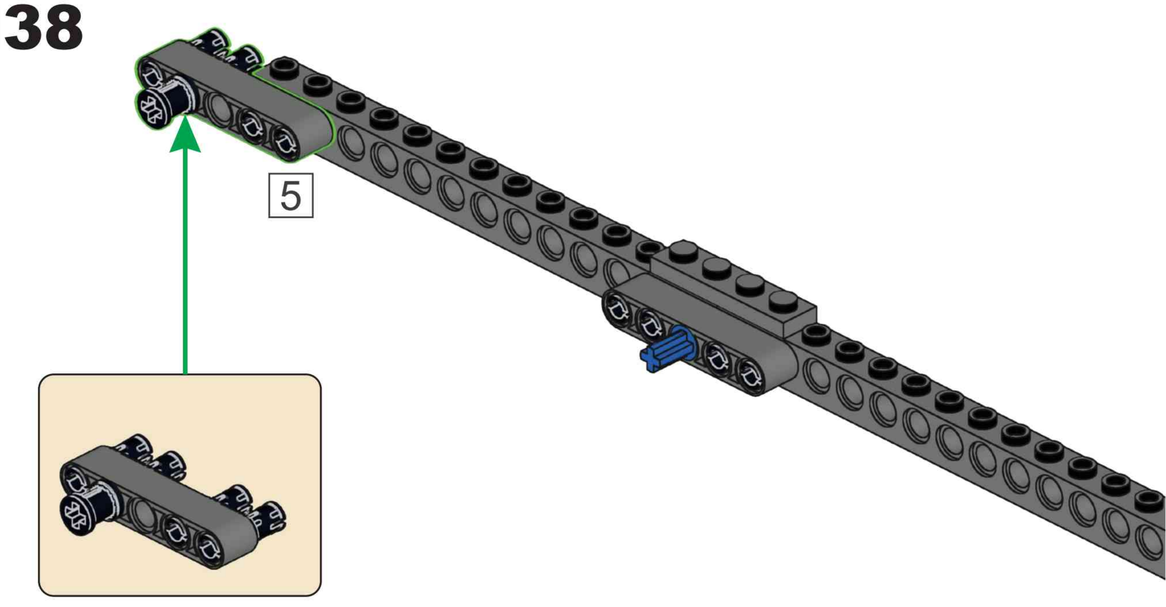

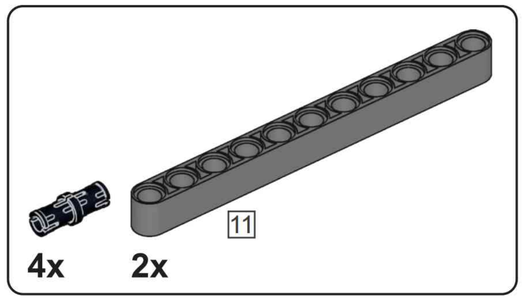

N39

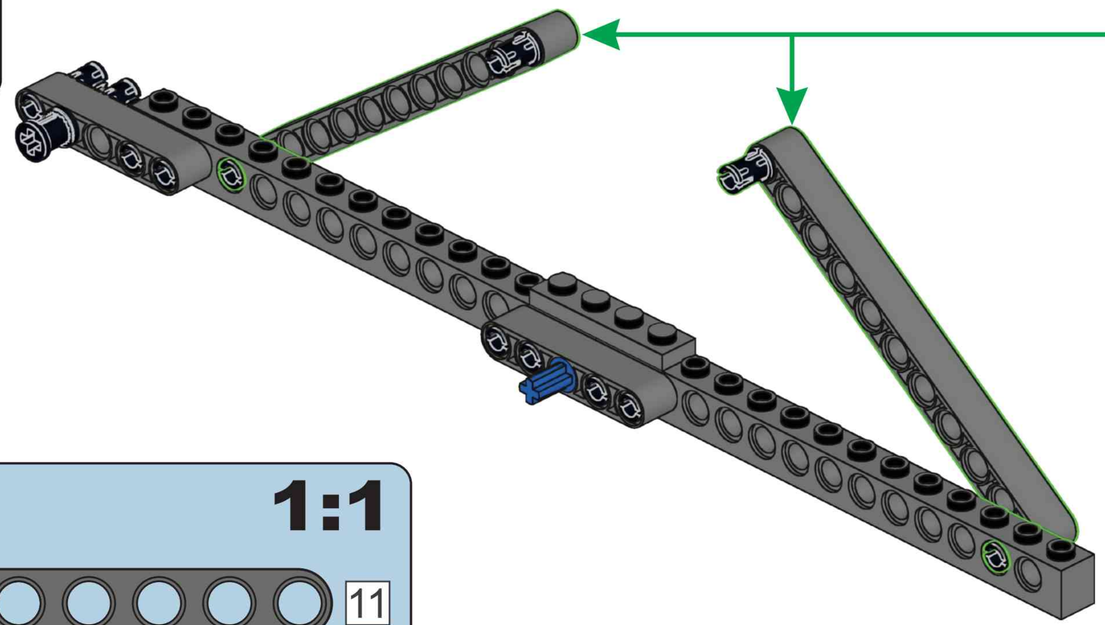

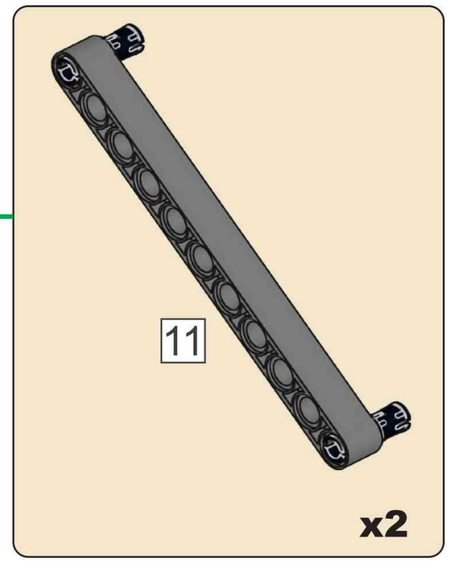

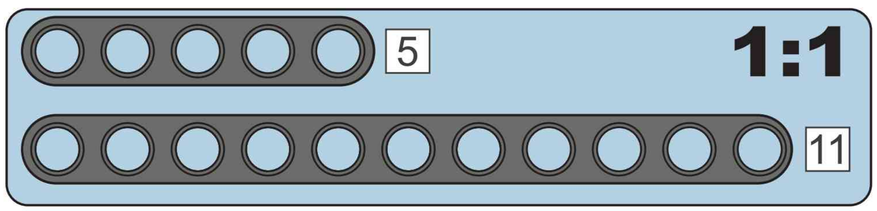

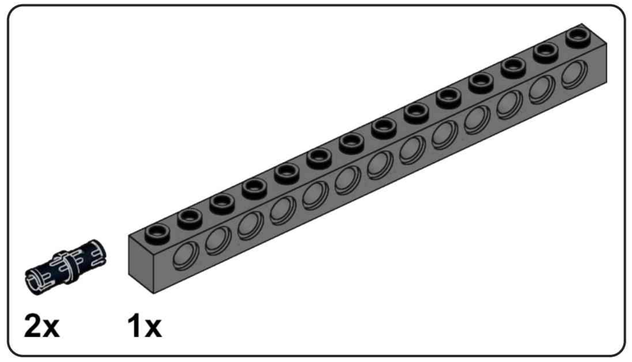

N40

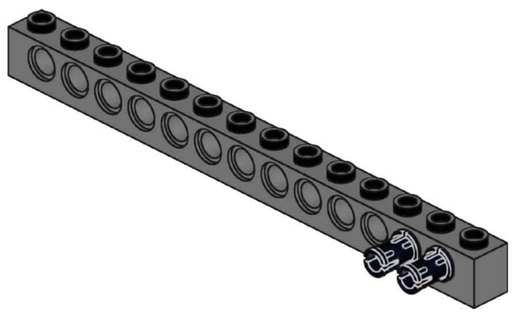

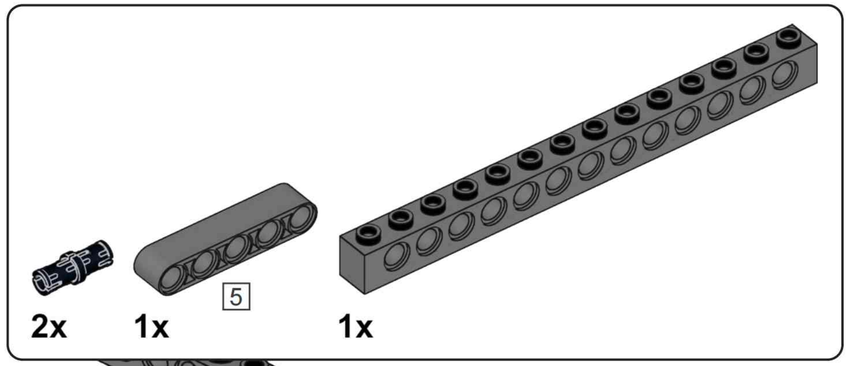

N41

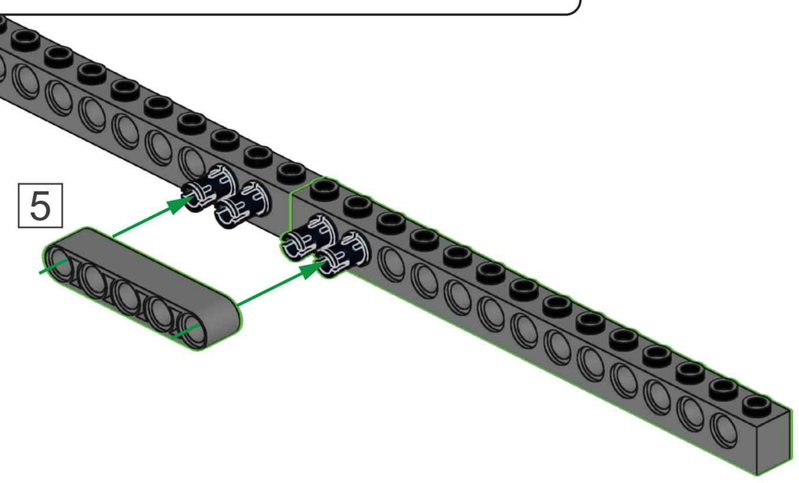

N42

1x 2x

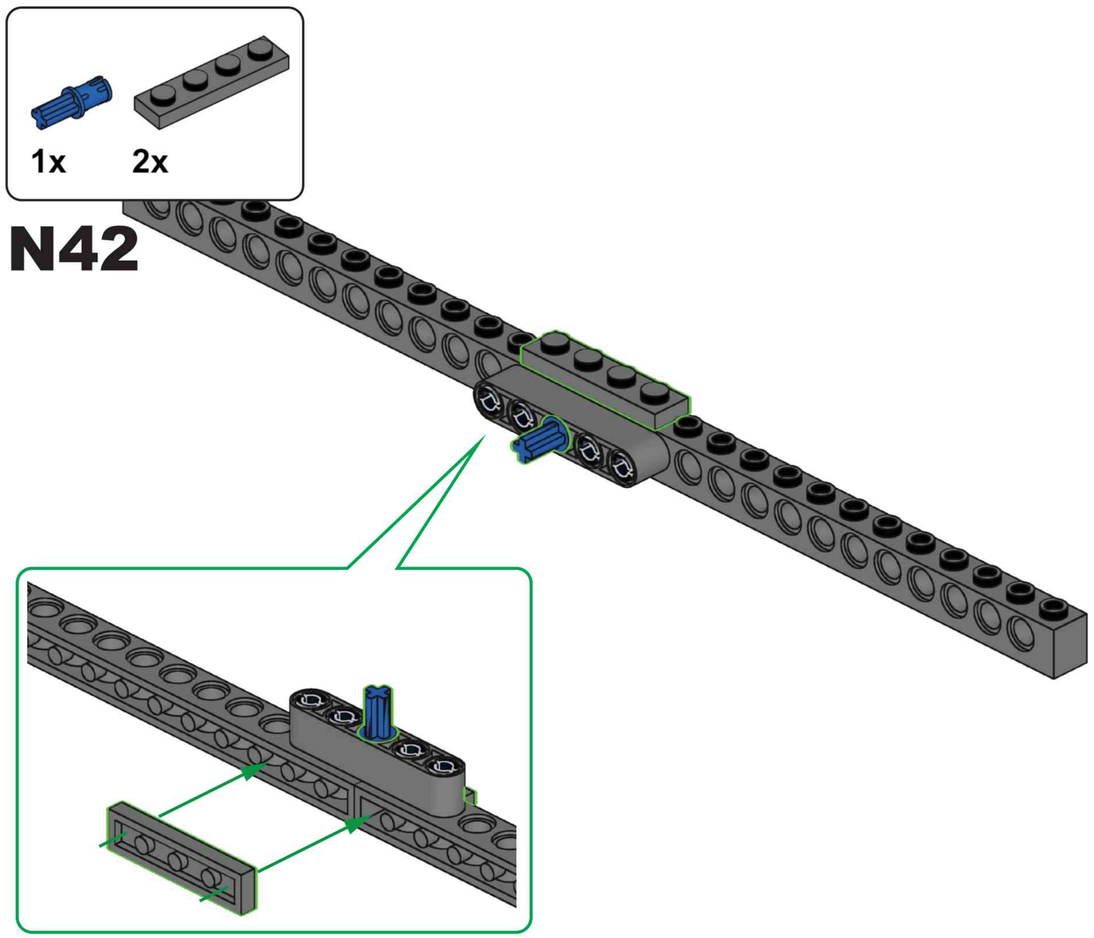

N43

1x 1x 5x 1x 1x

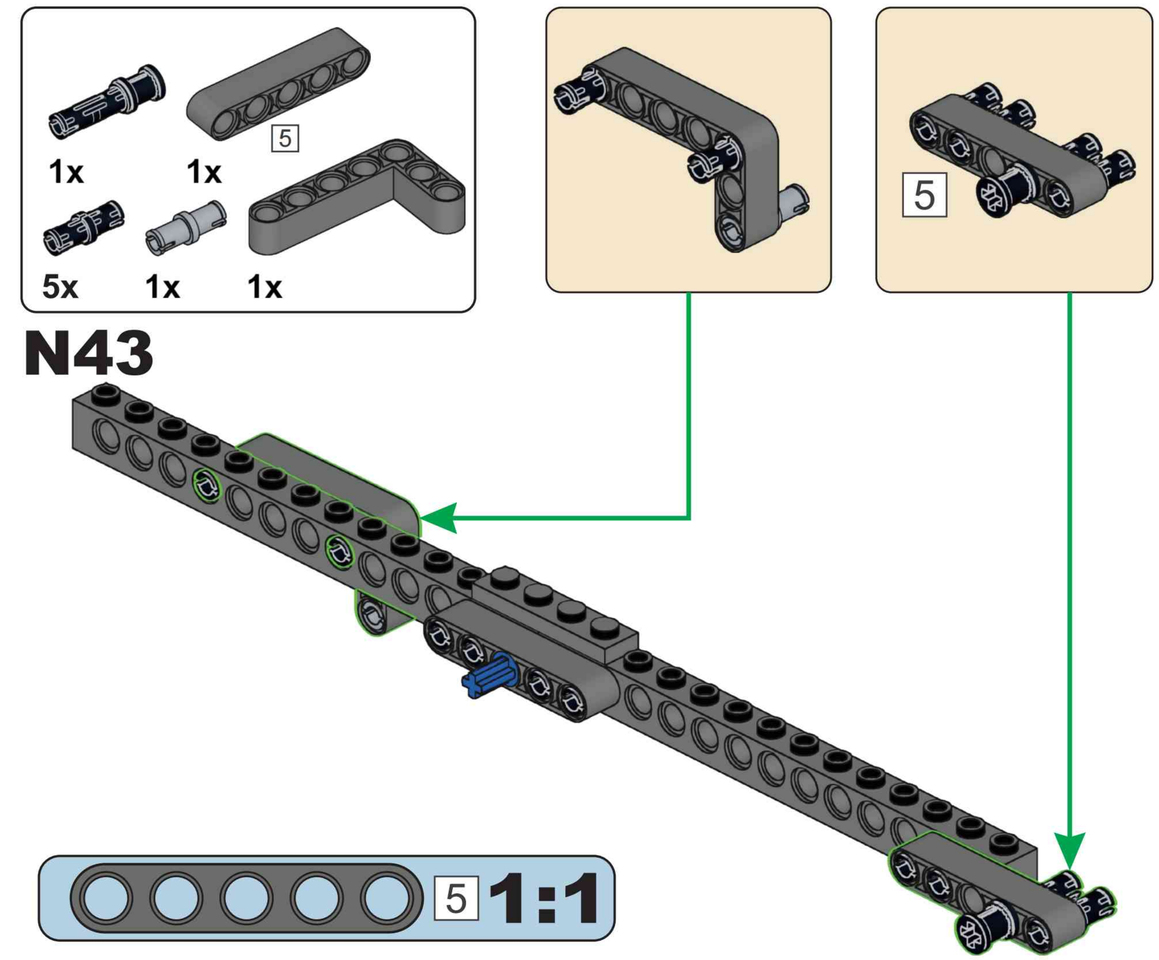

N44

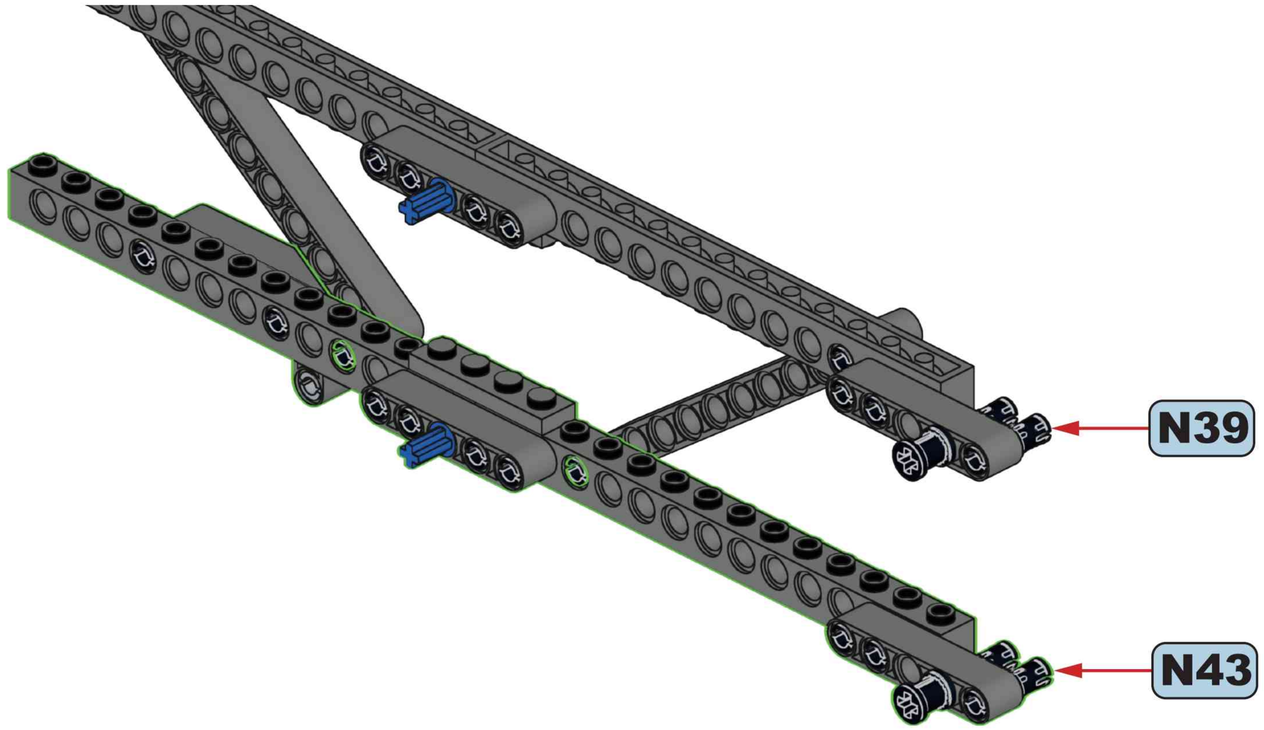

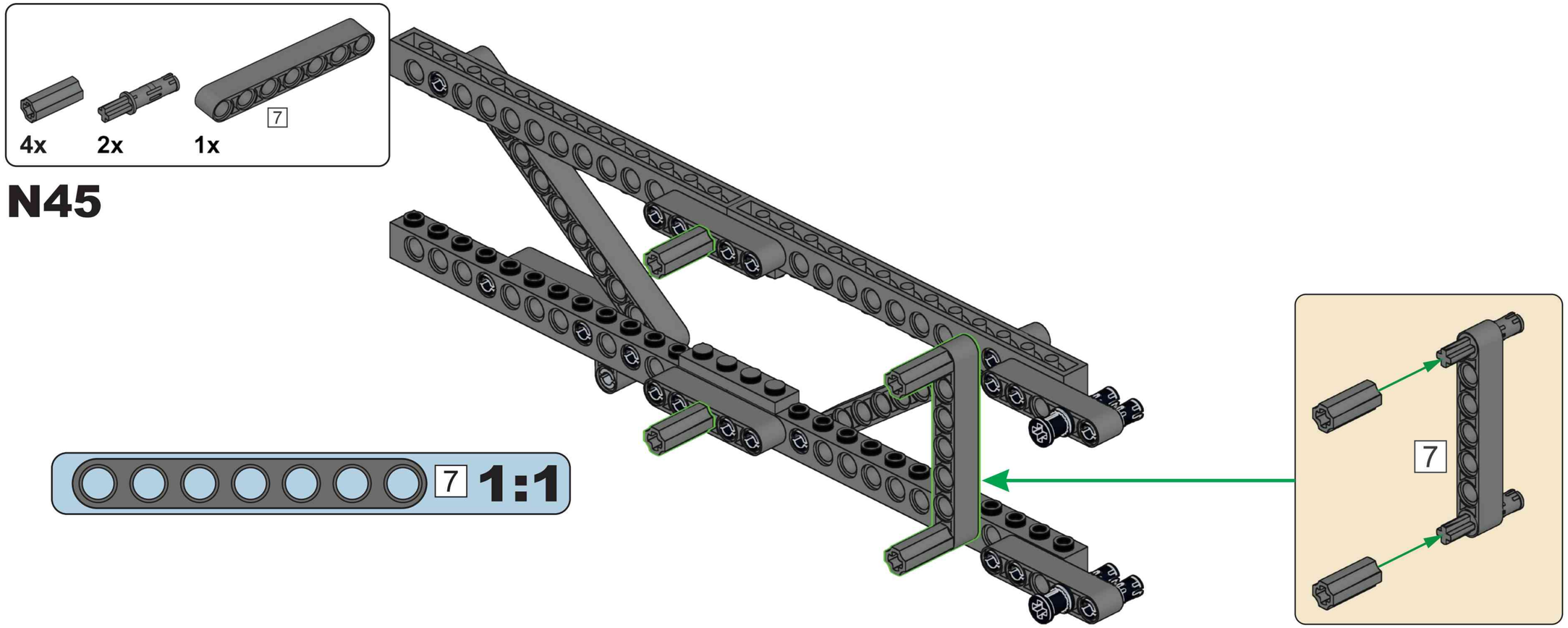

N45

N46





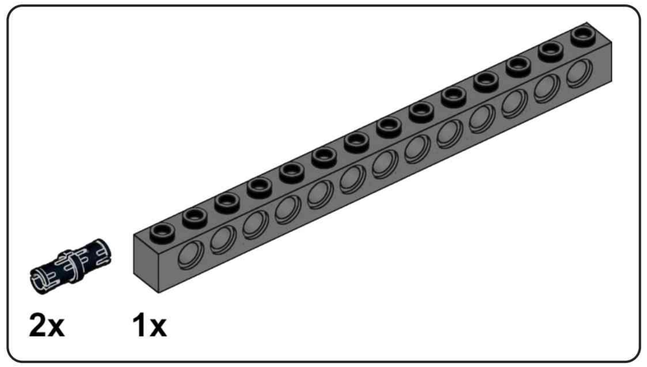

N47

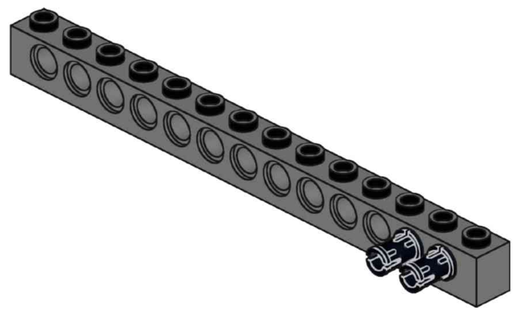

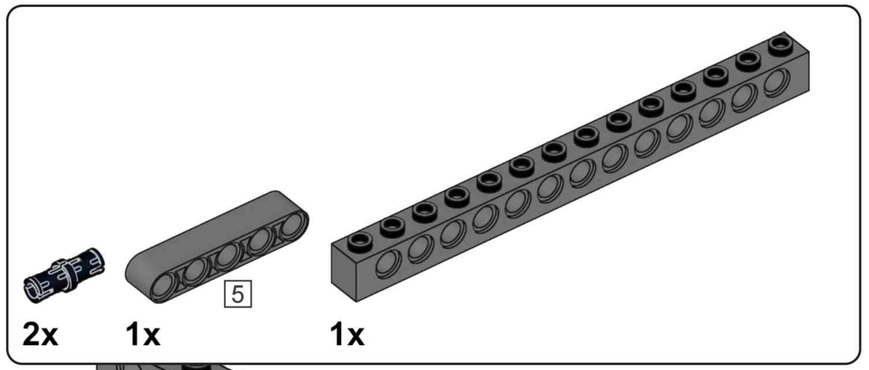

N48

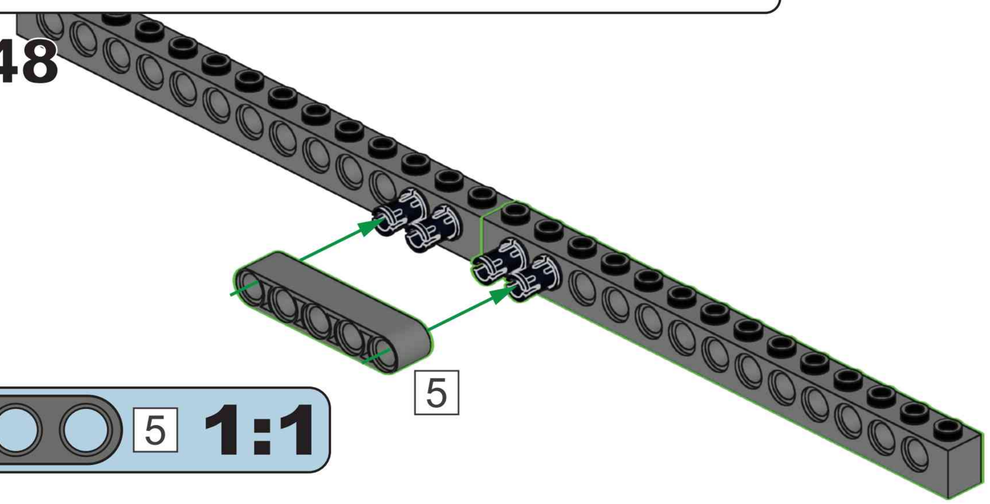

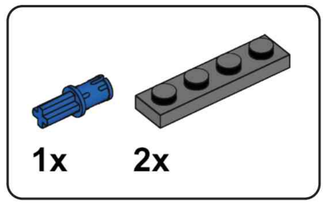

N49

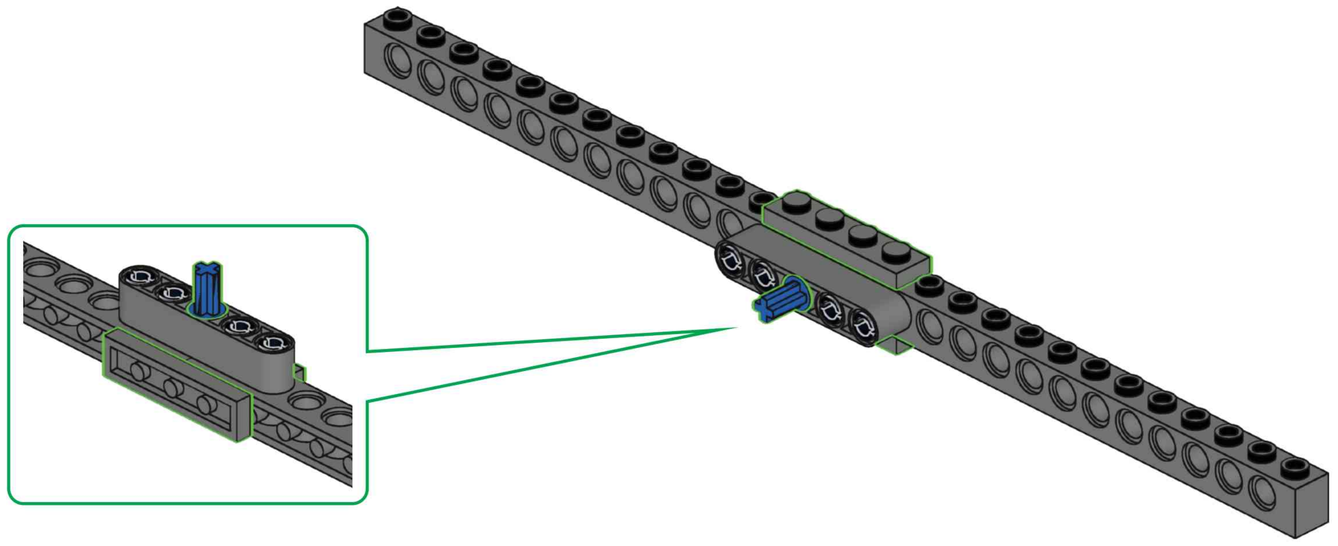

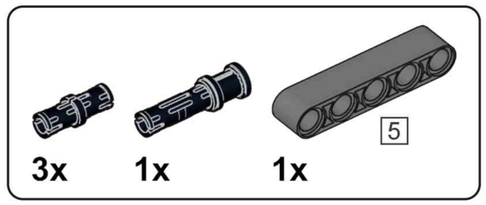

N50

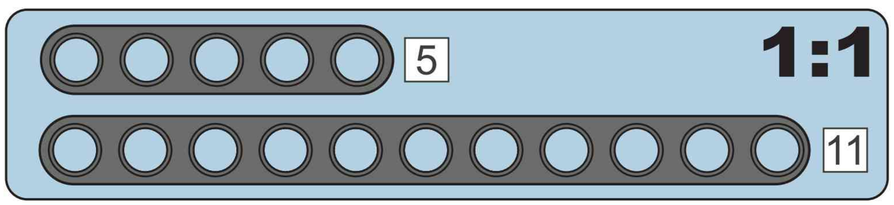

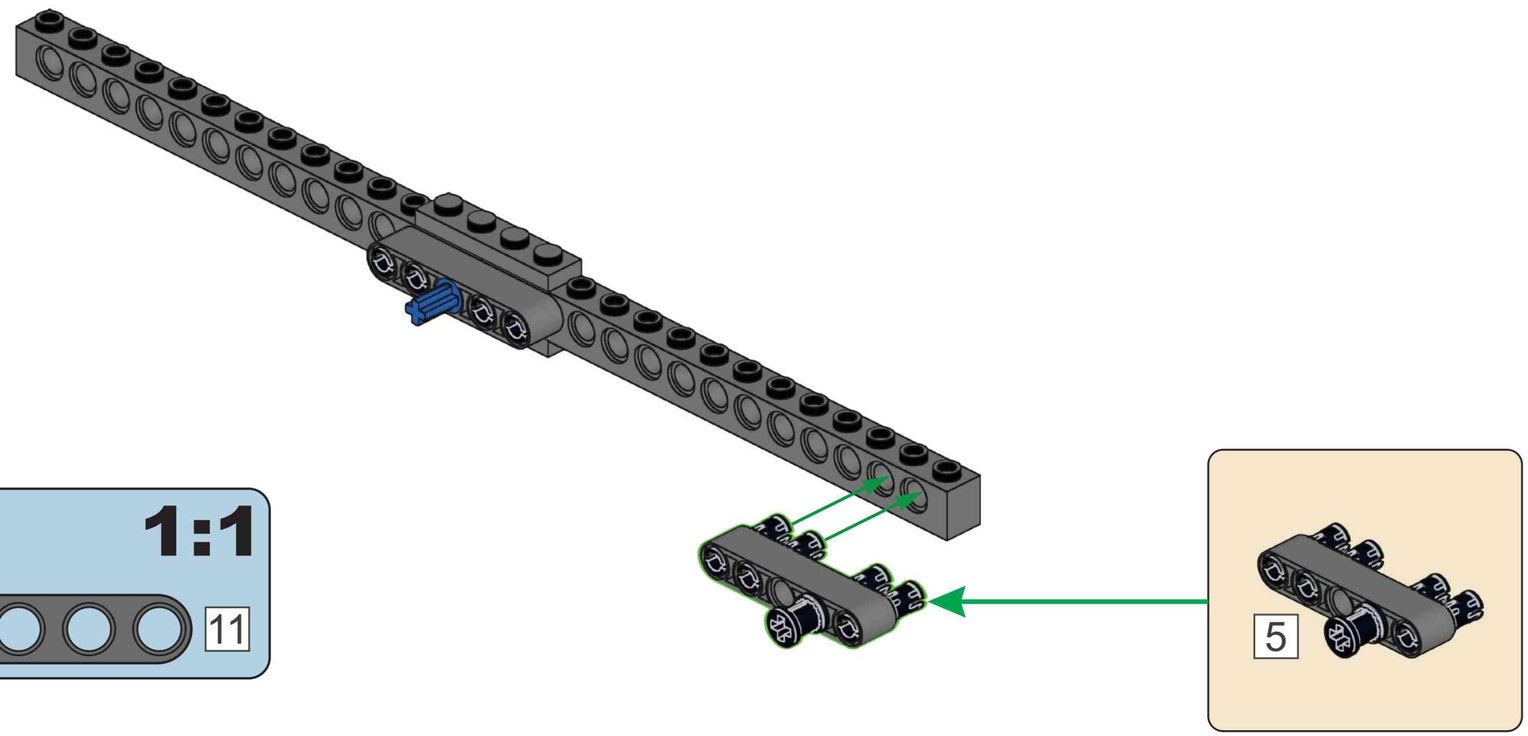

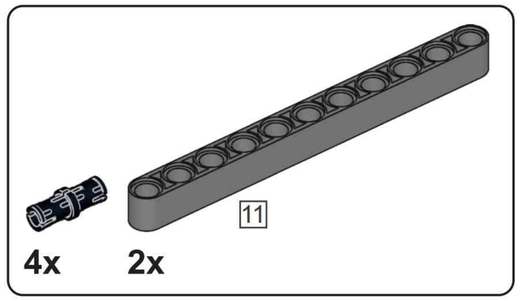

N51

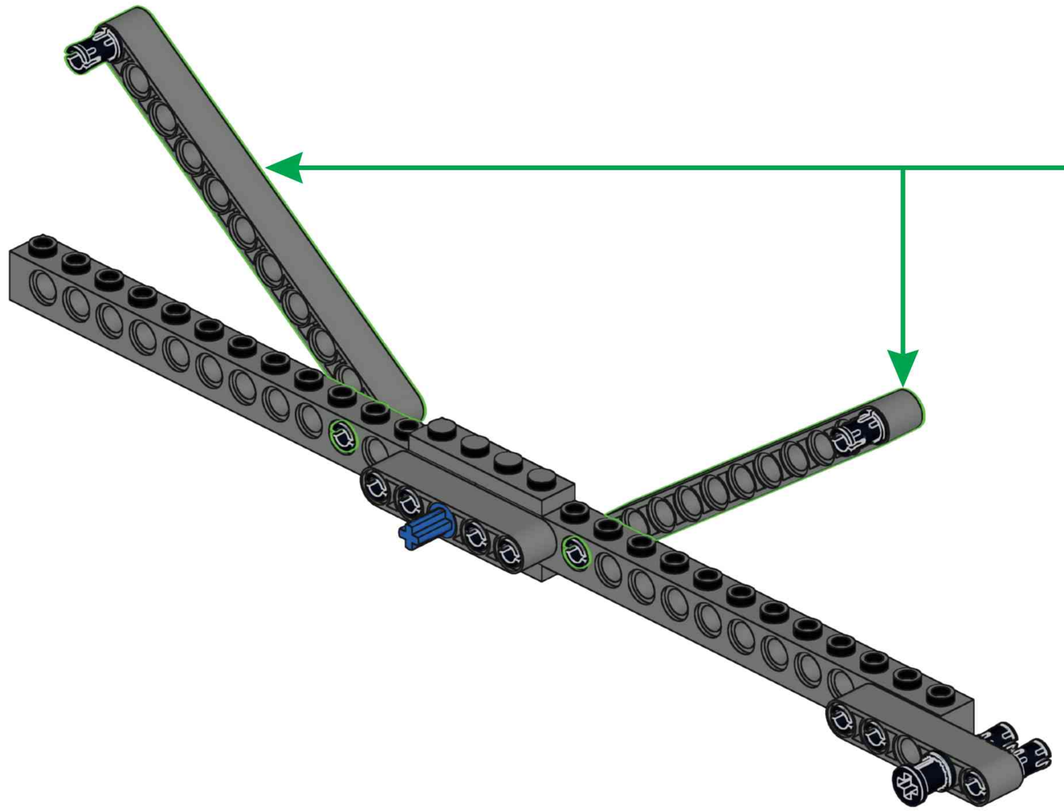

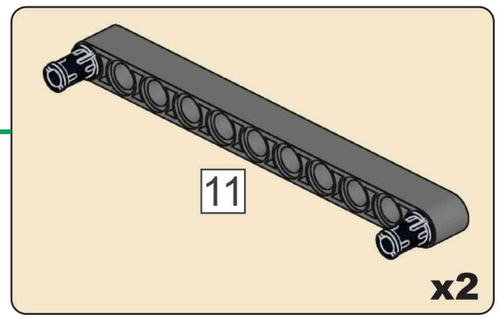

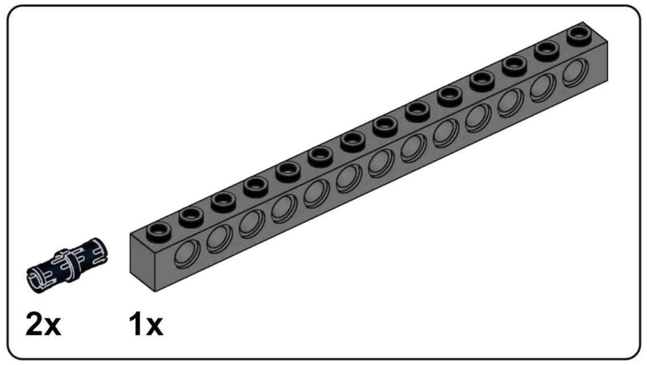

N52

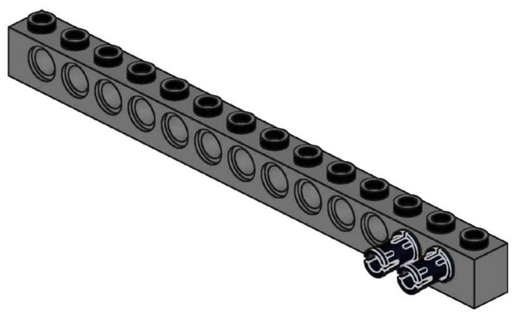

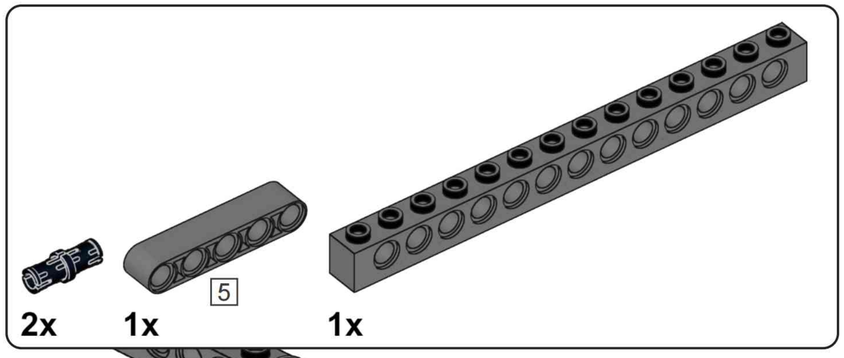

N53

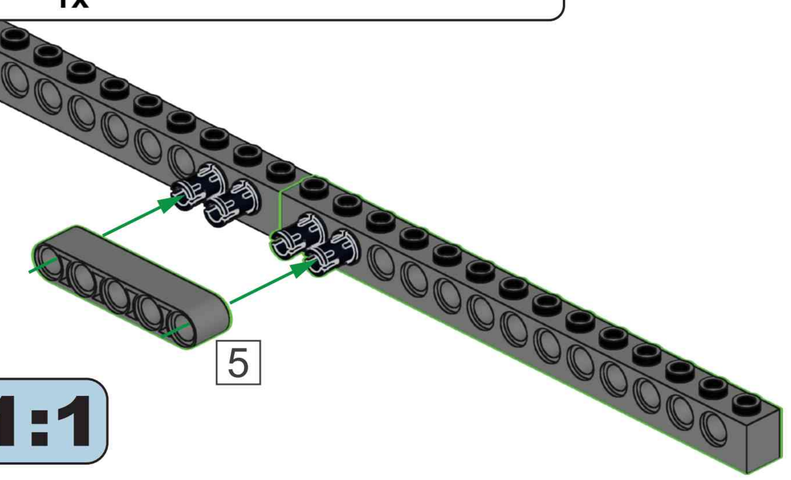

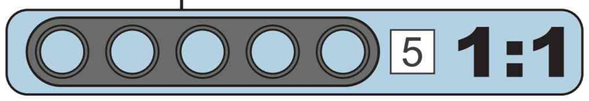

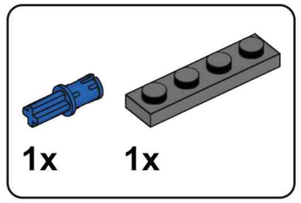

N54

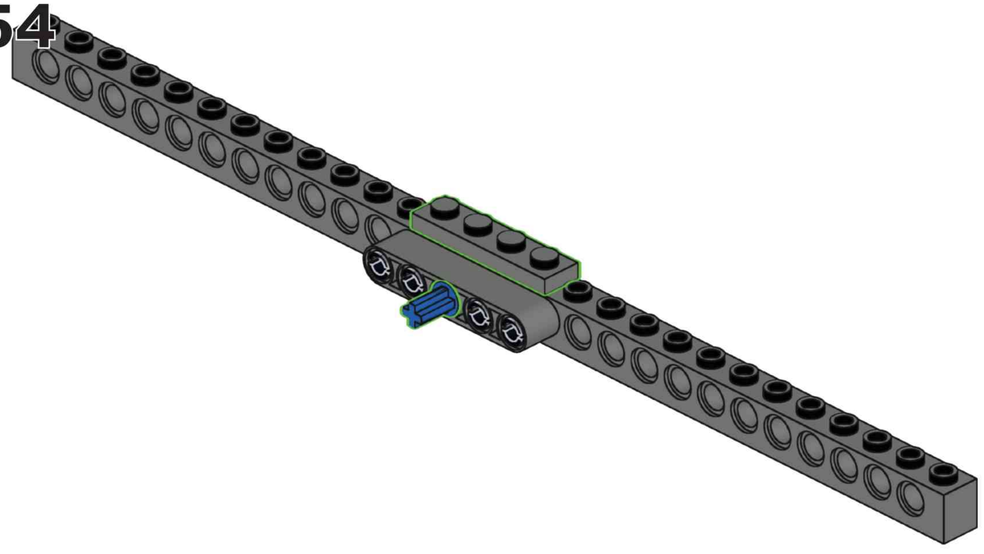

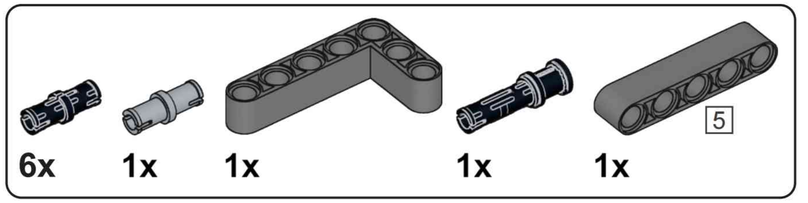

N55

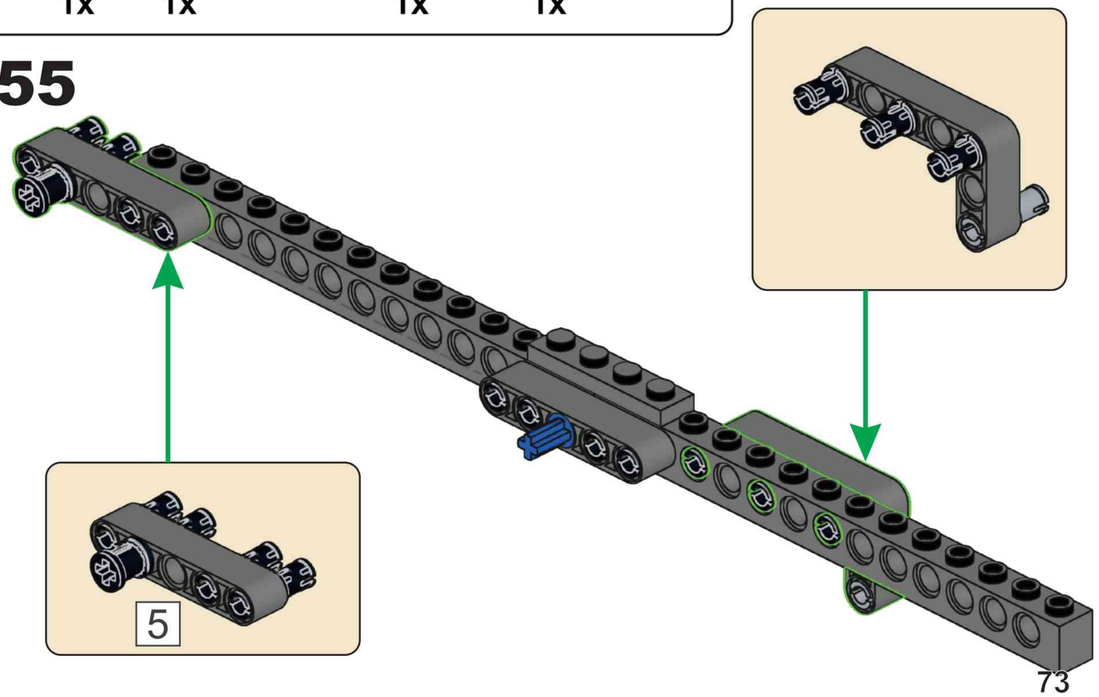

N56



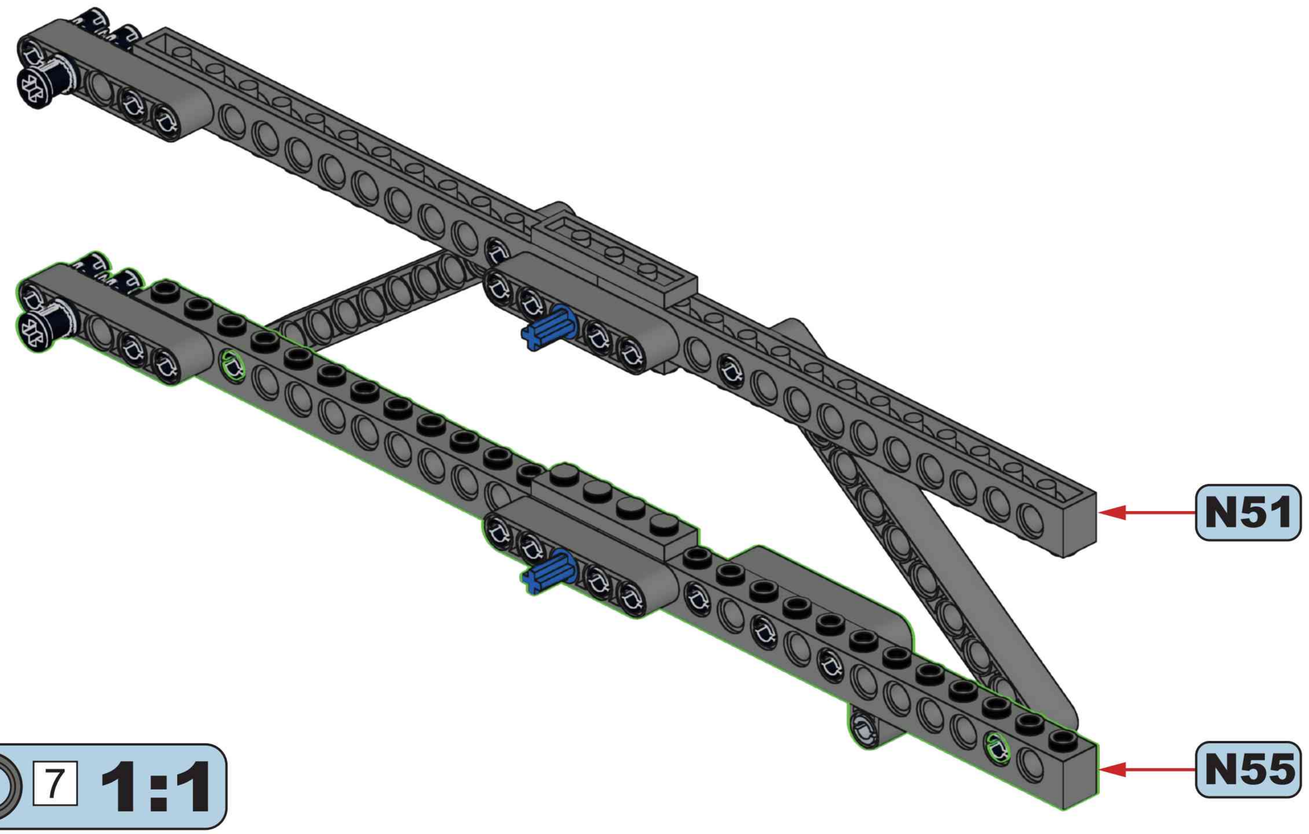

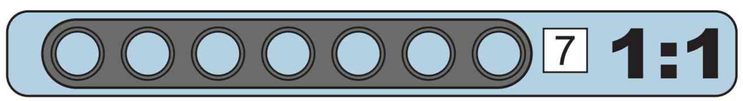

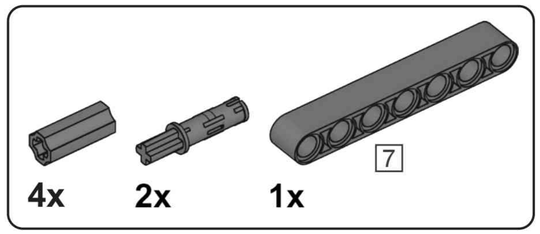

N57

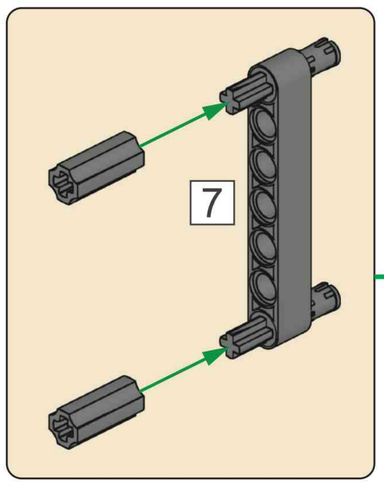

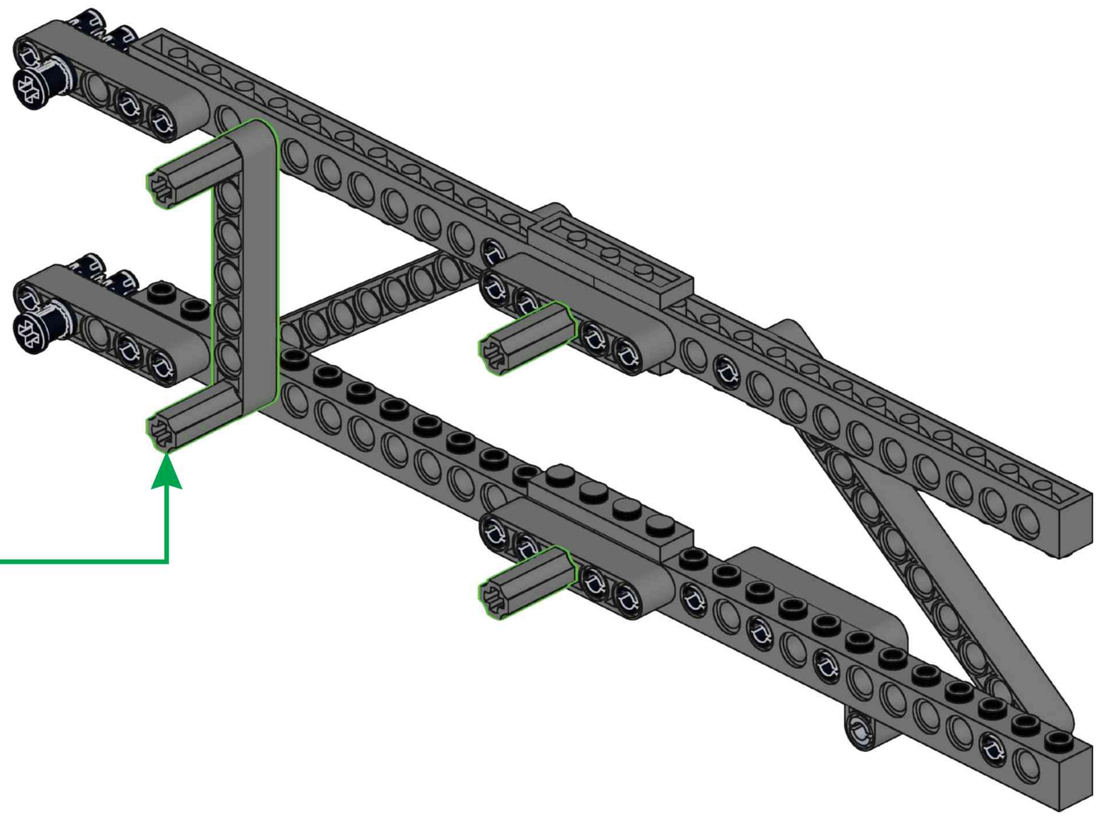

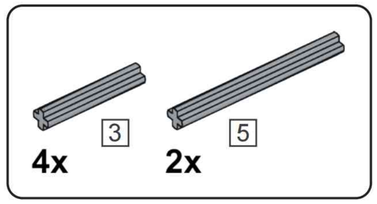

N58

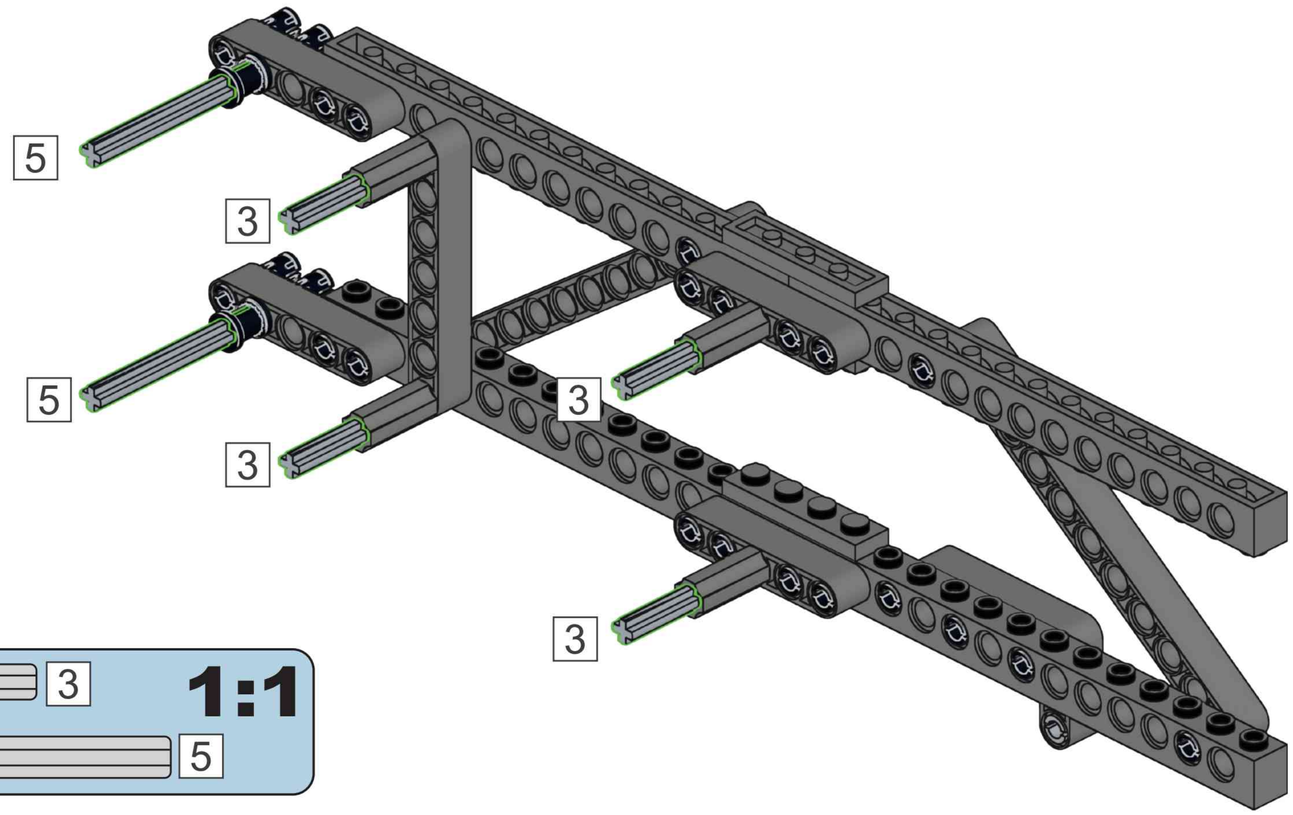

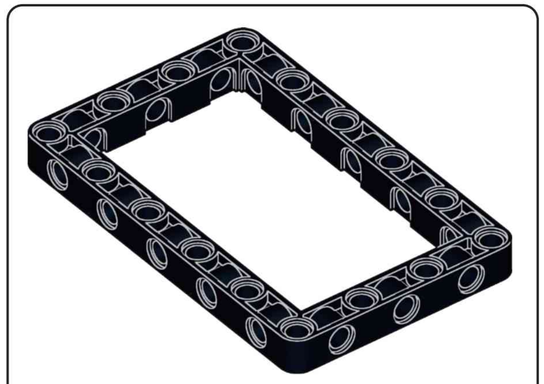

N59

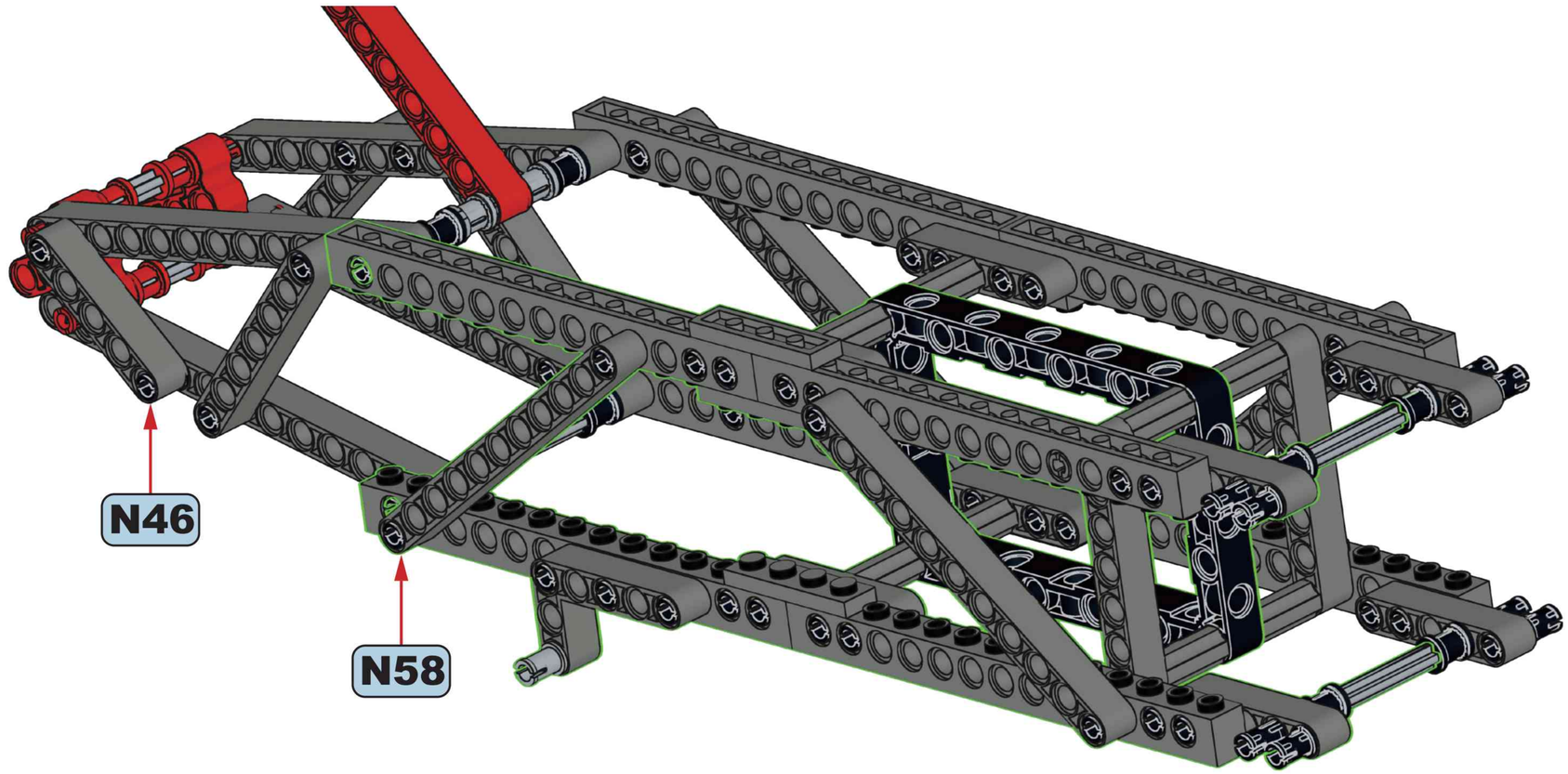

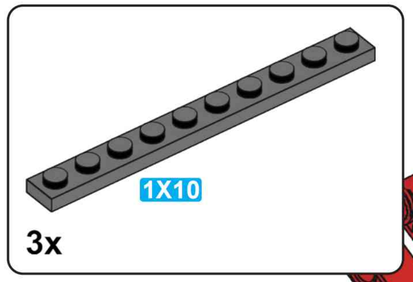

3x

N60

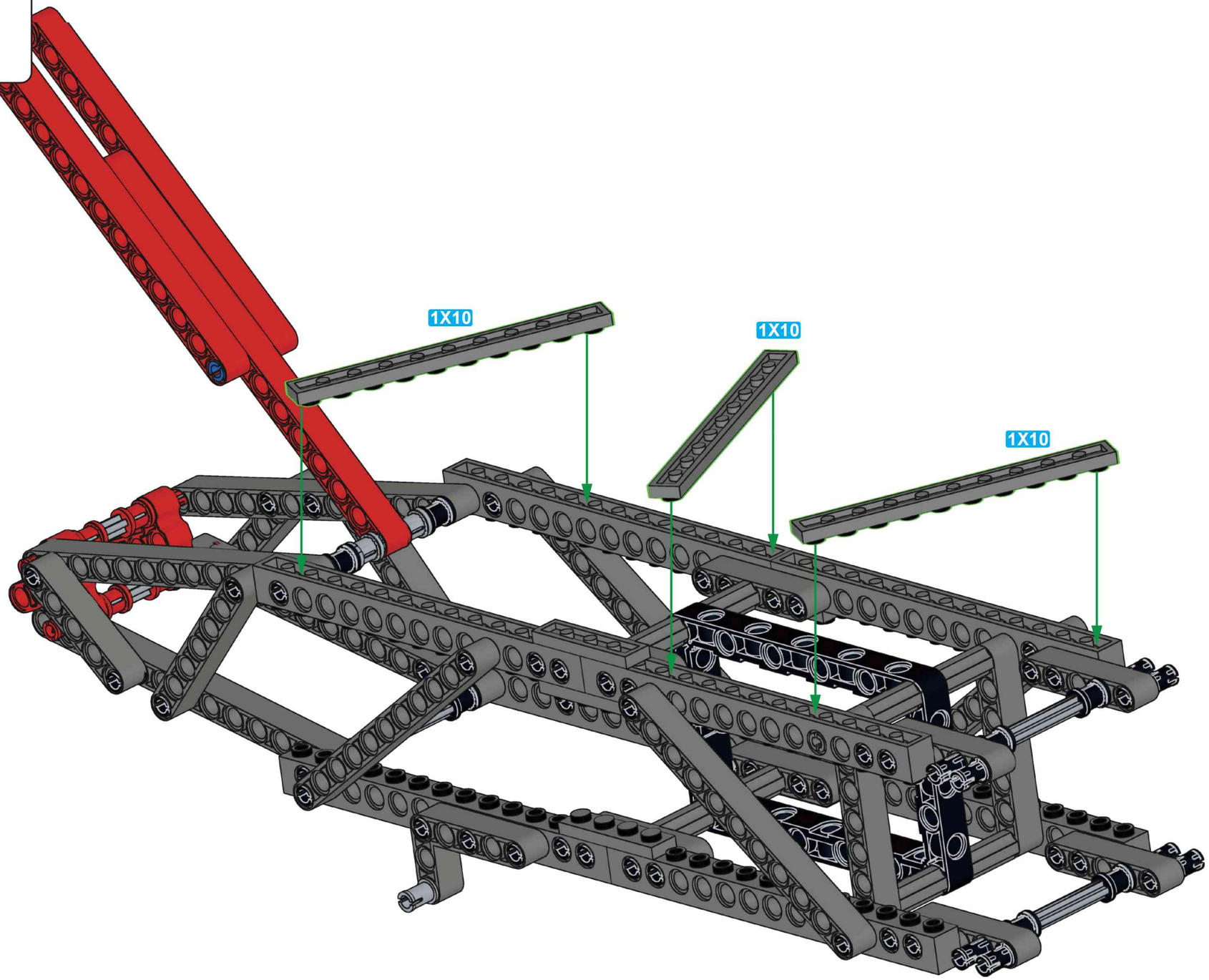

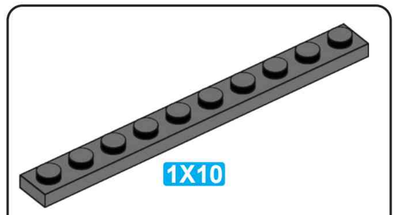

3x

N61

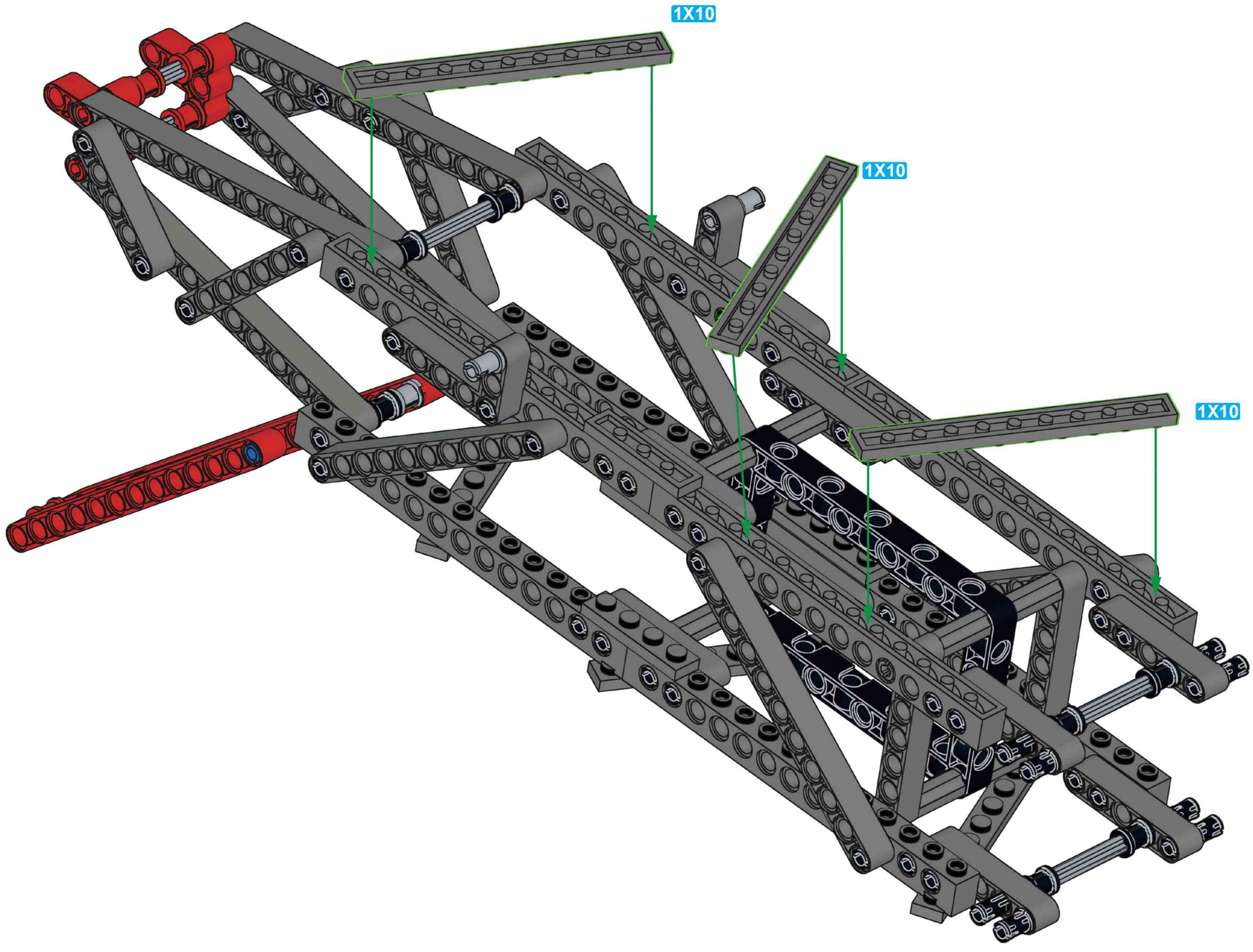

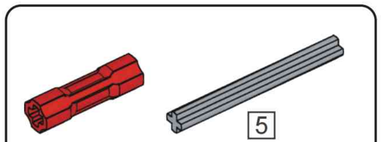

N62

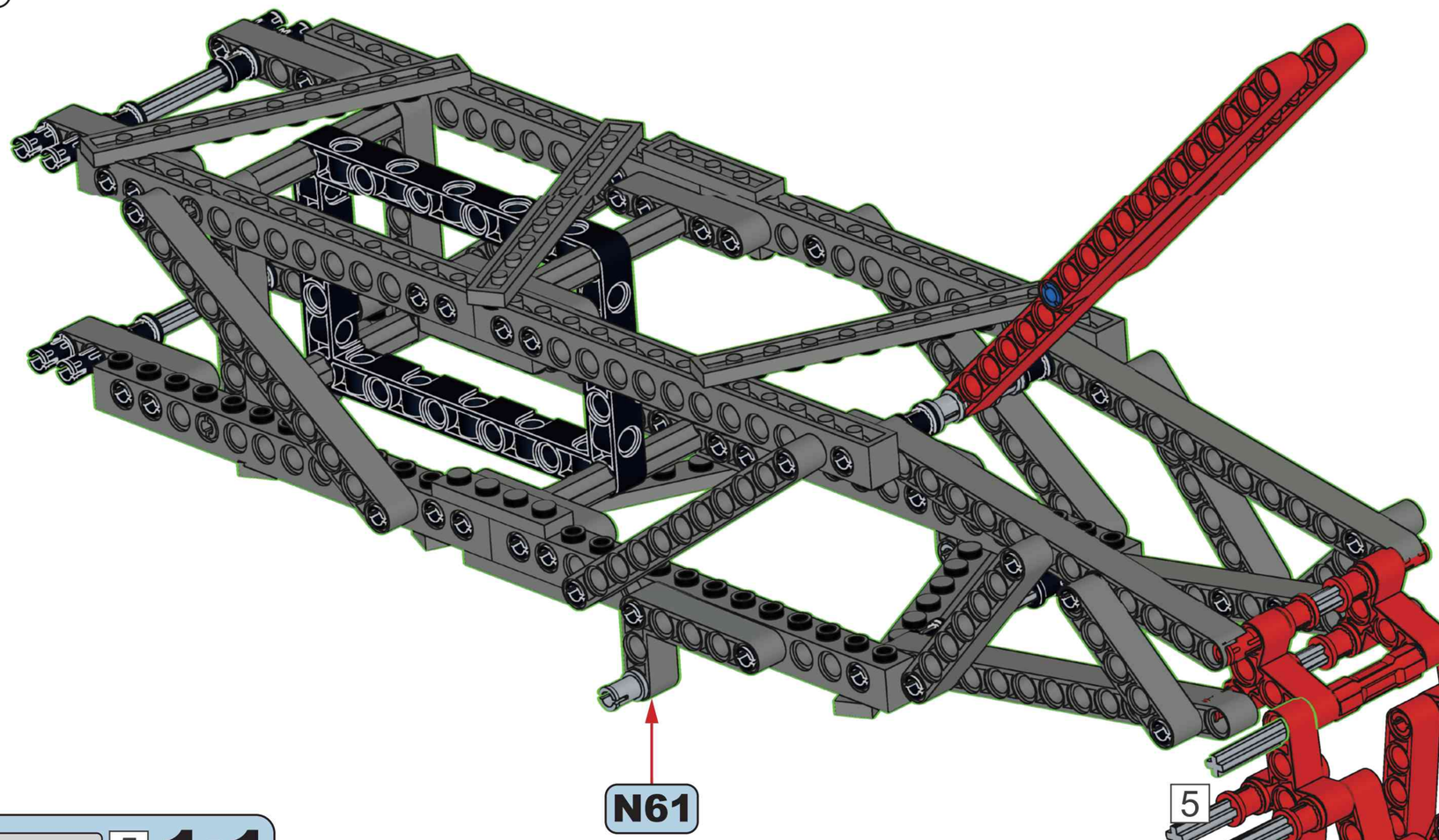

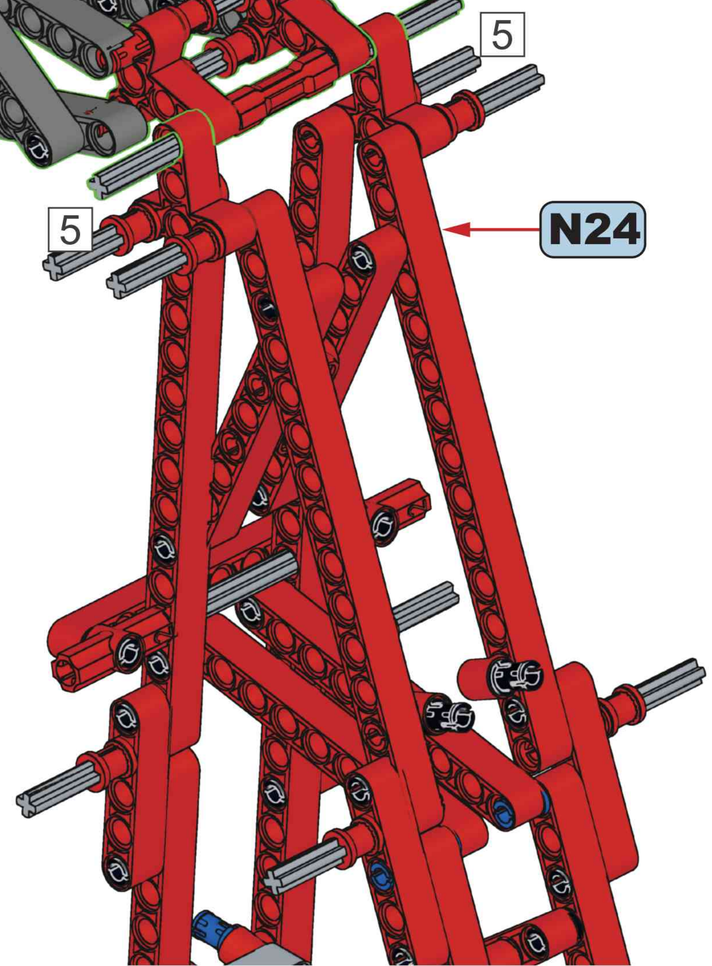

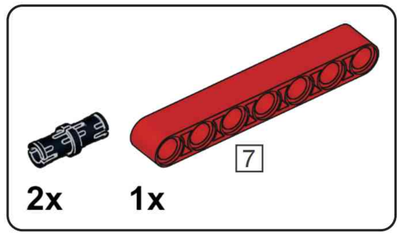

N63

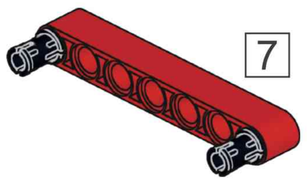

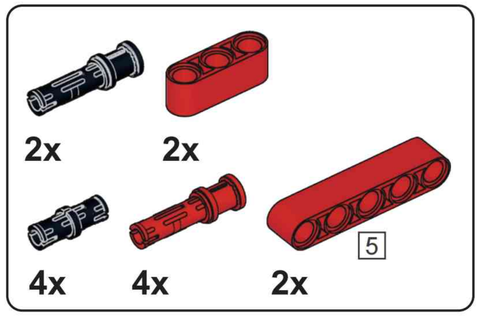

N64

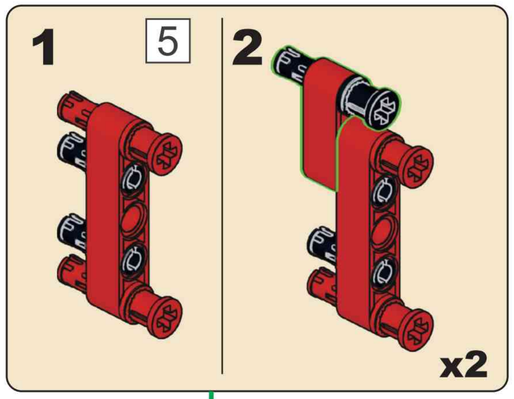

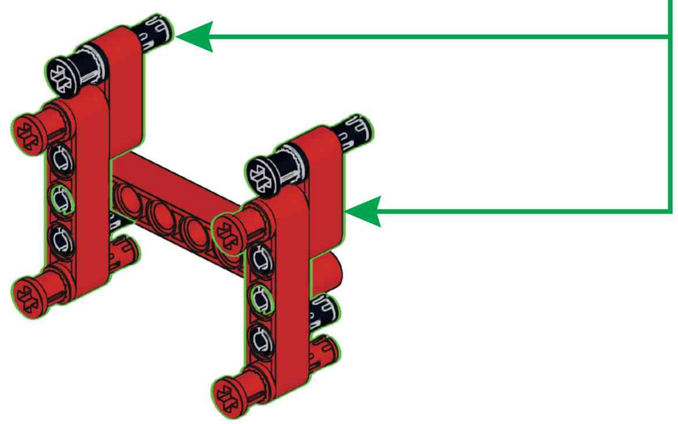

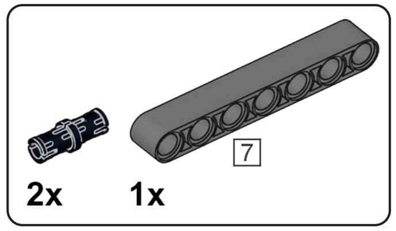

N65

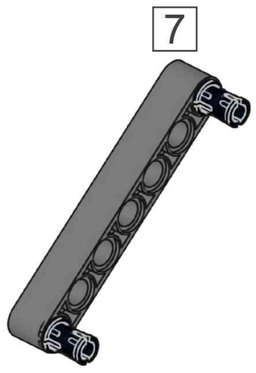

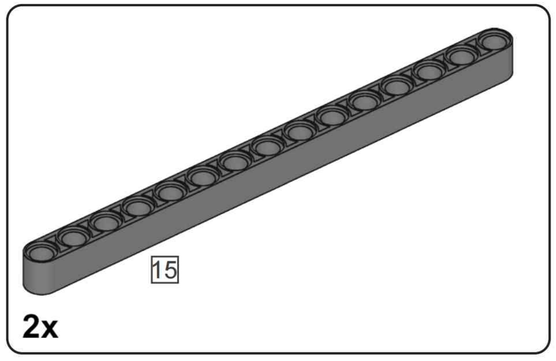

N66

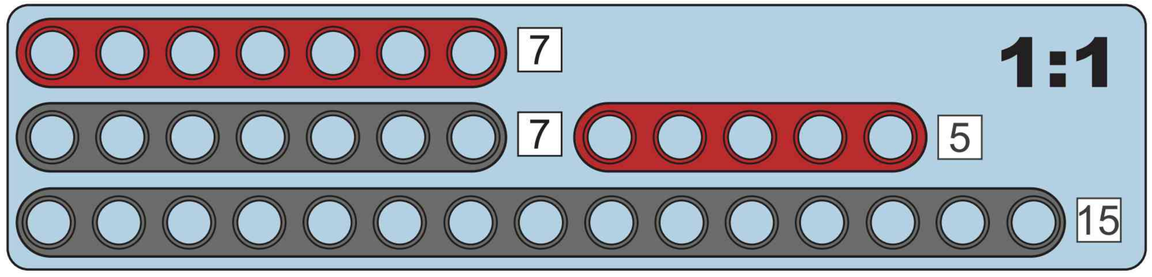

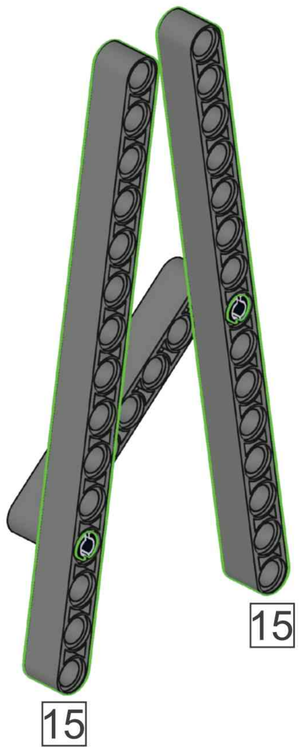

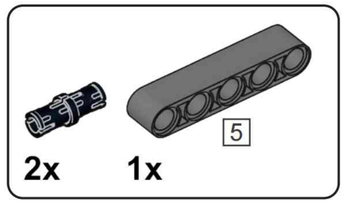

N67

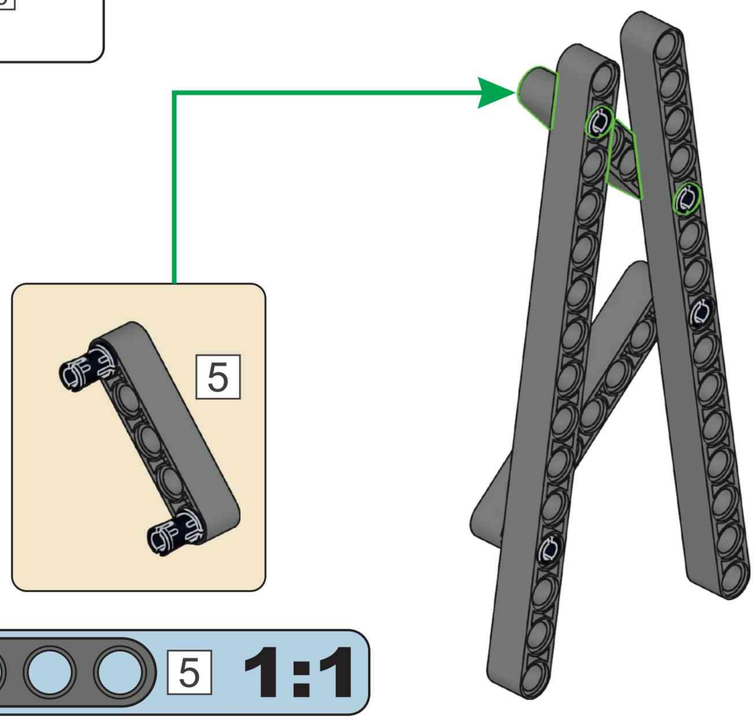

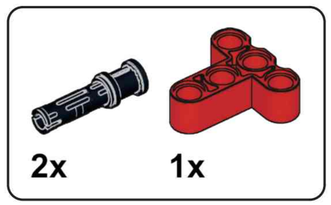

N68

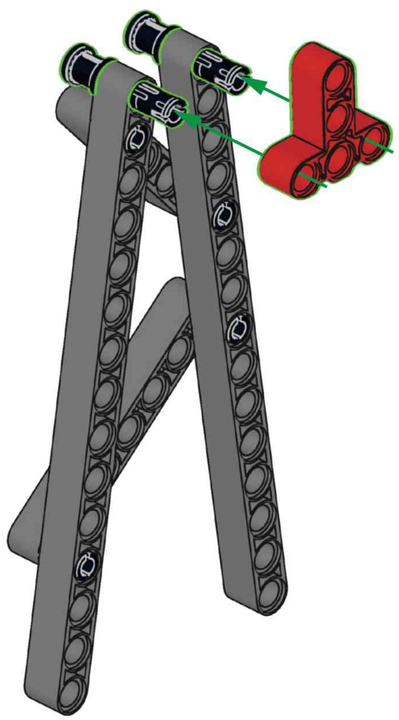

N69

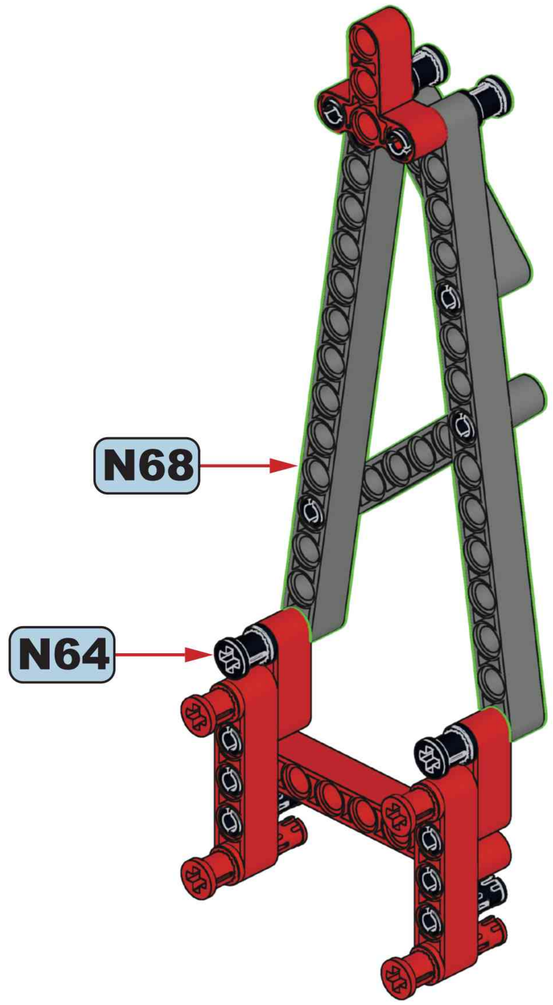

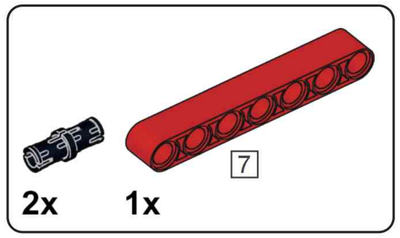

N70

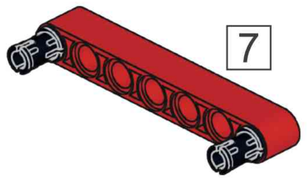

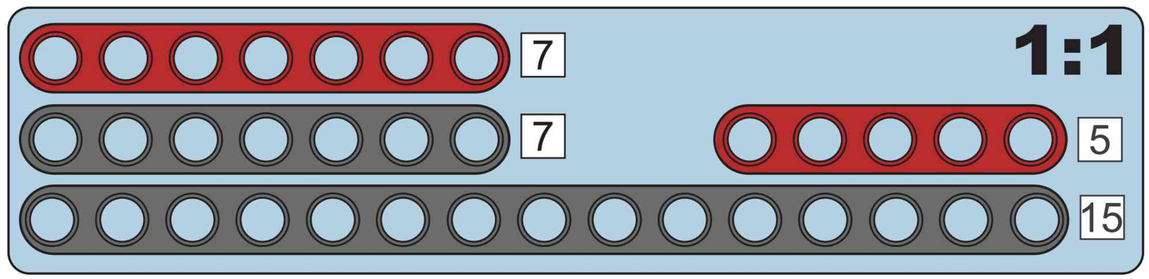

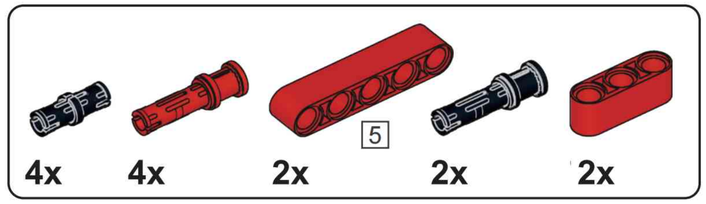

N71

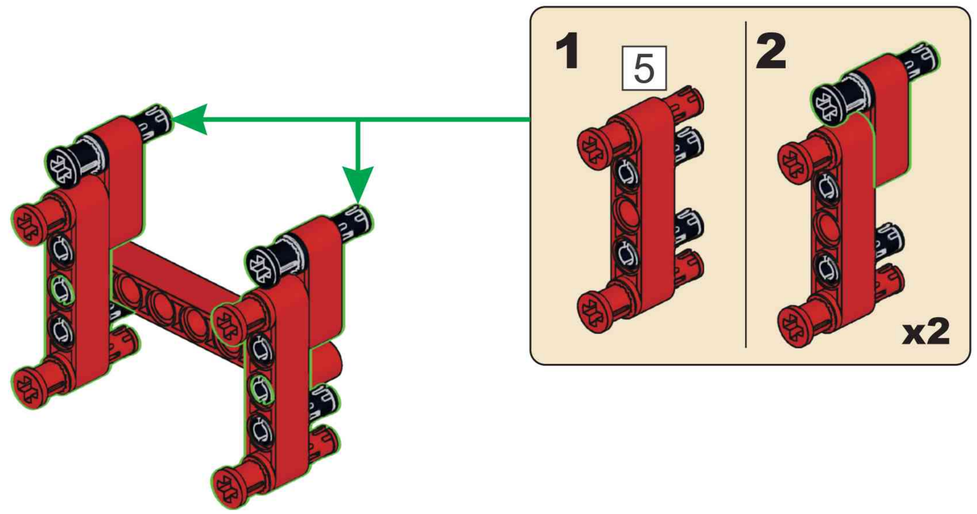

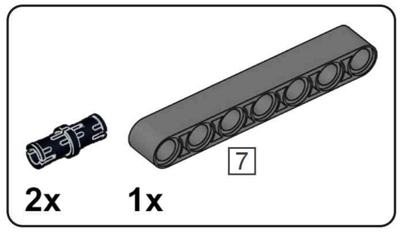

N72

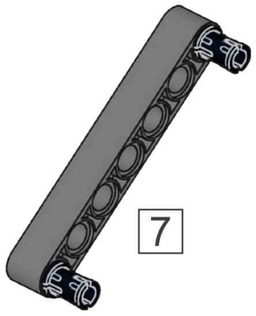

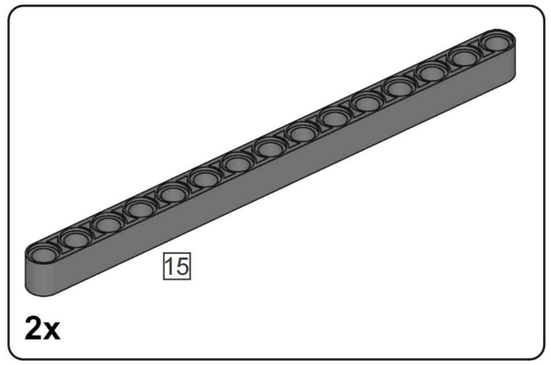

N73

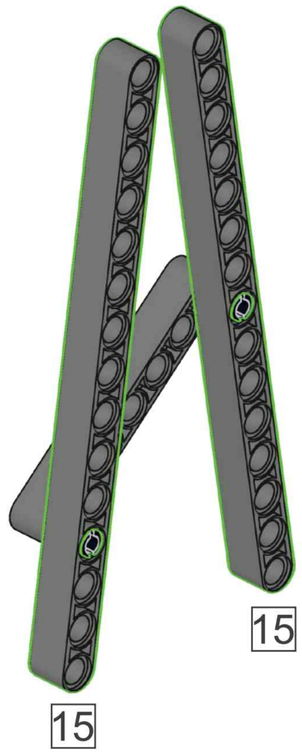

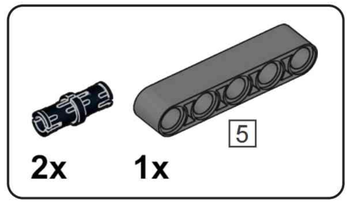

N74

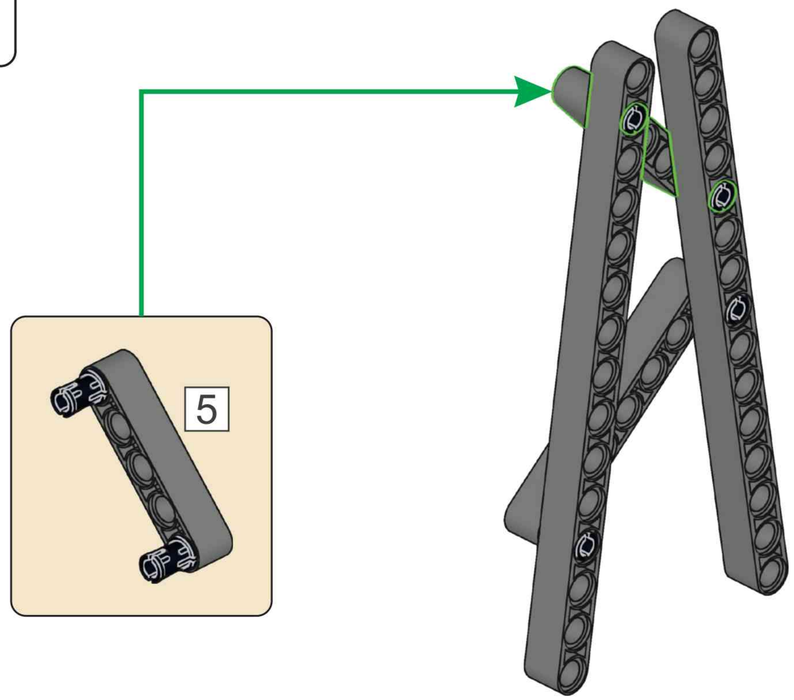

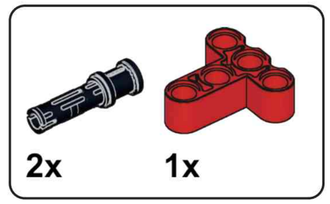

N75

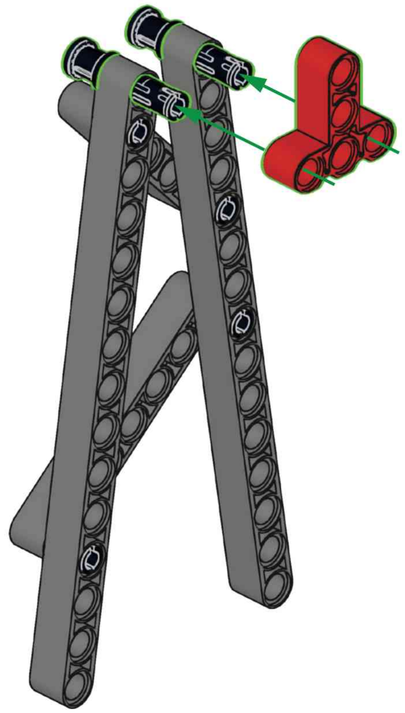

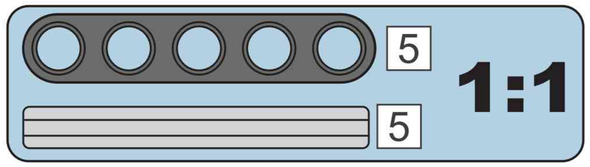

N76

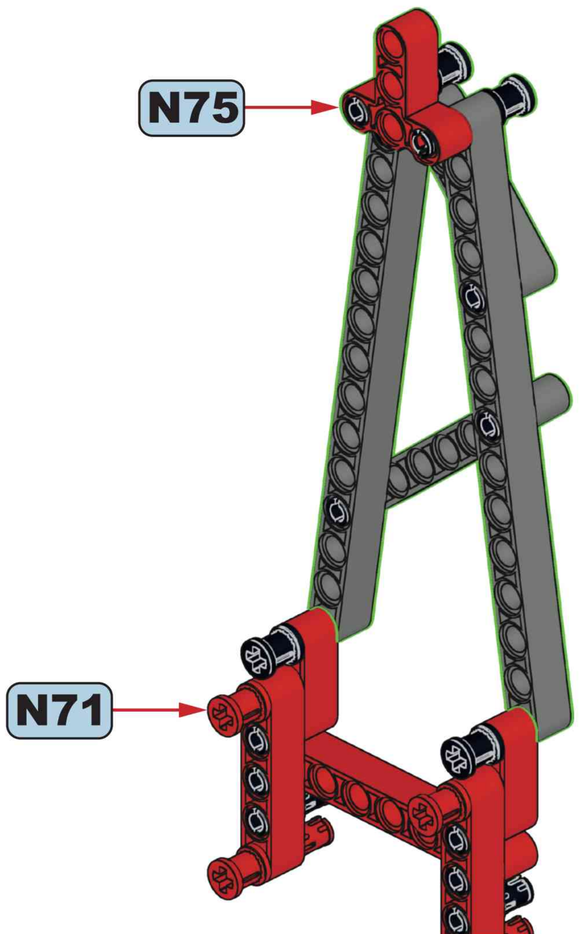

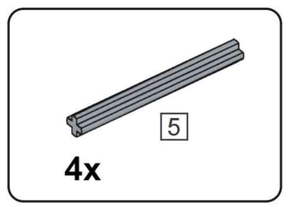

N77

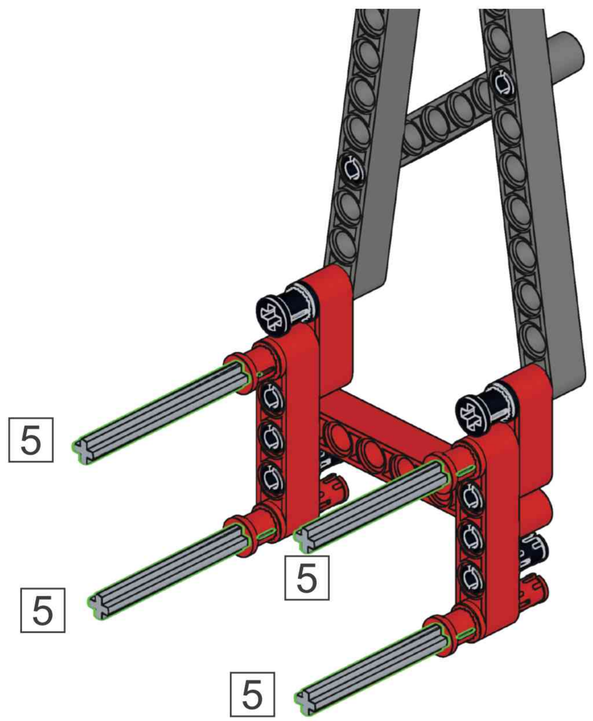

1x

N78

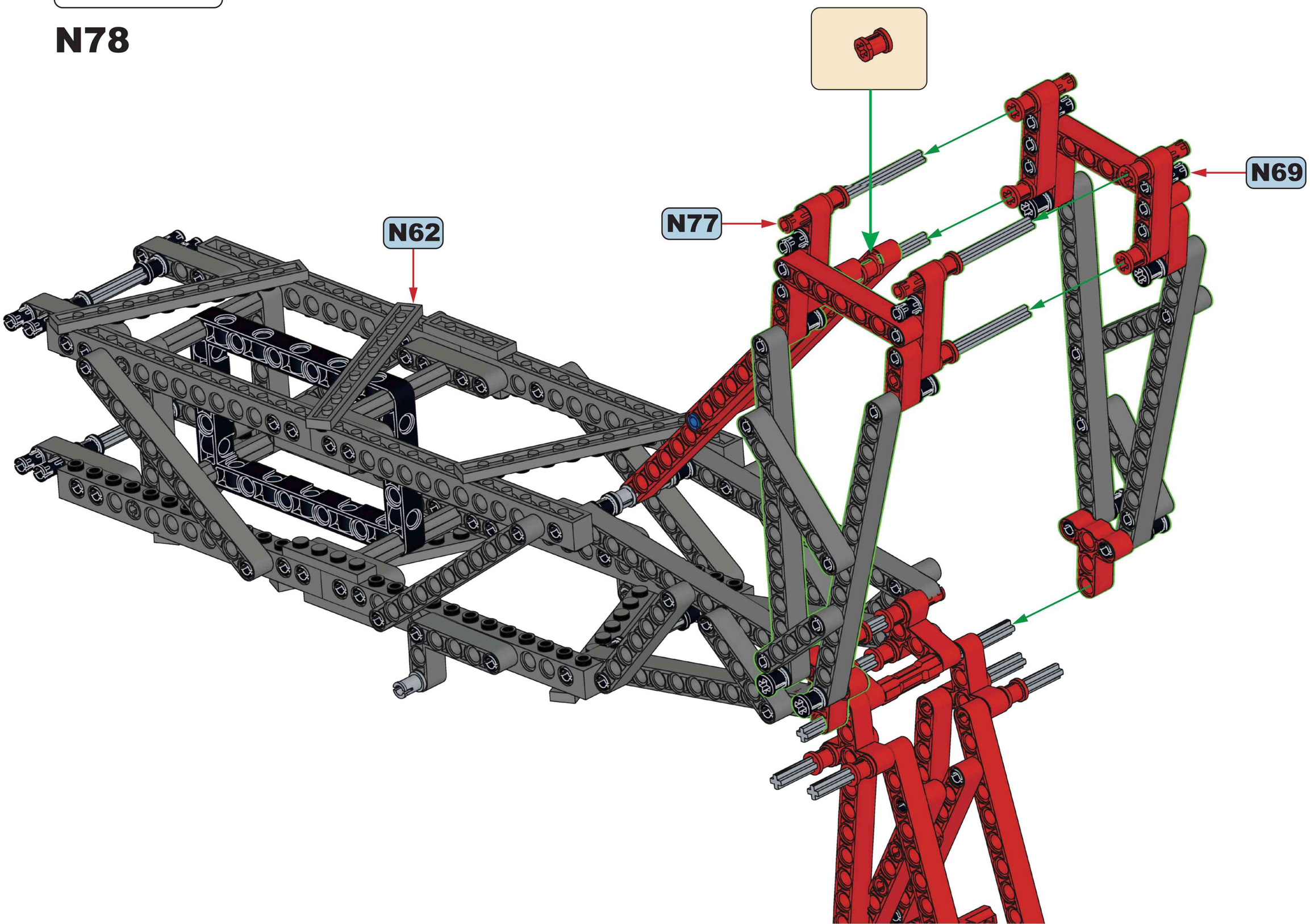

2x 2x 3

3 1:1

N79

3

3

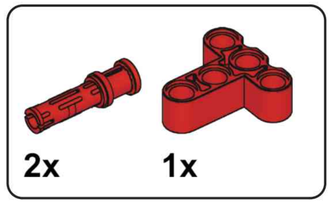

N80

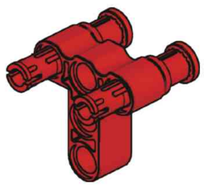

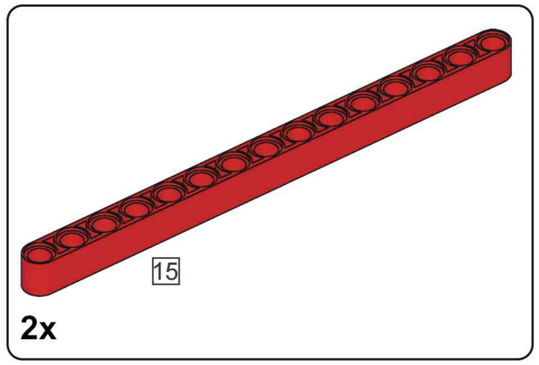

N81

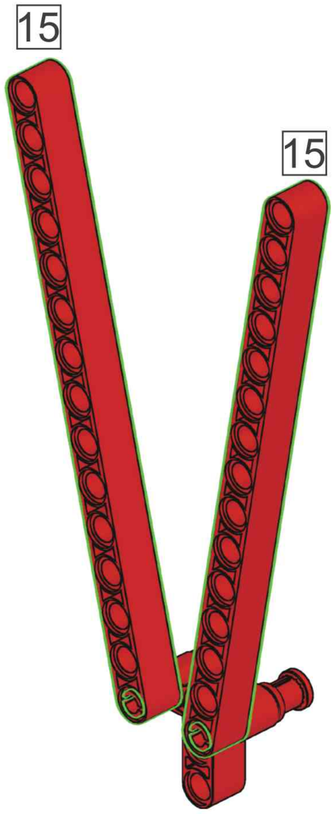

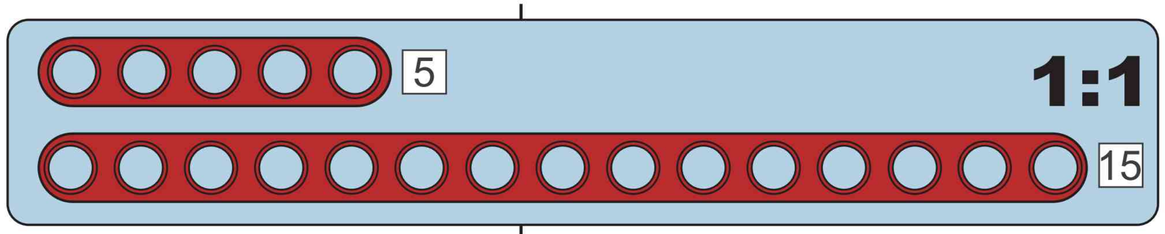

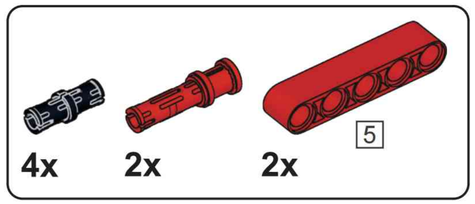

N82

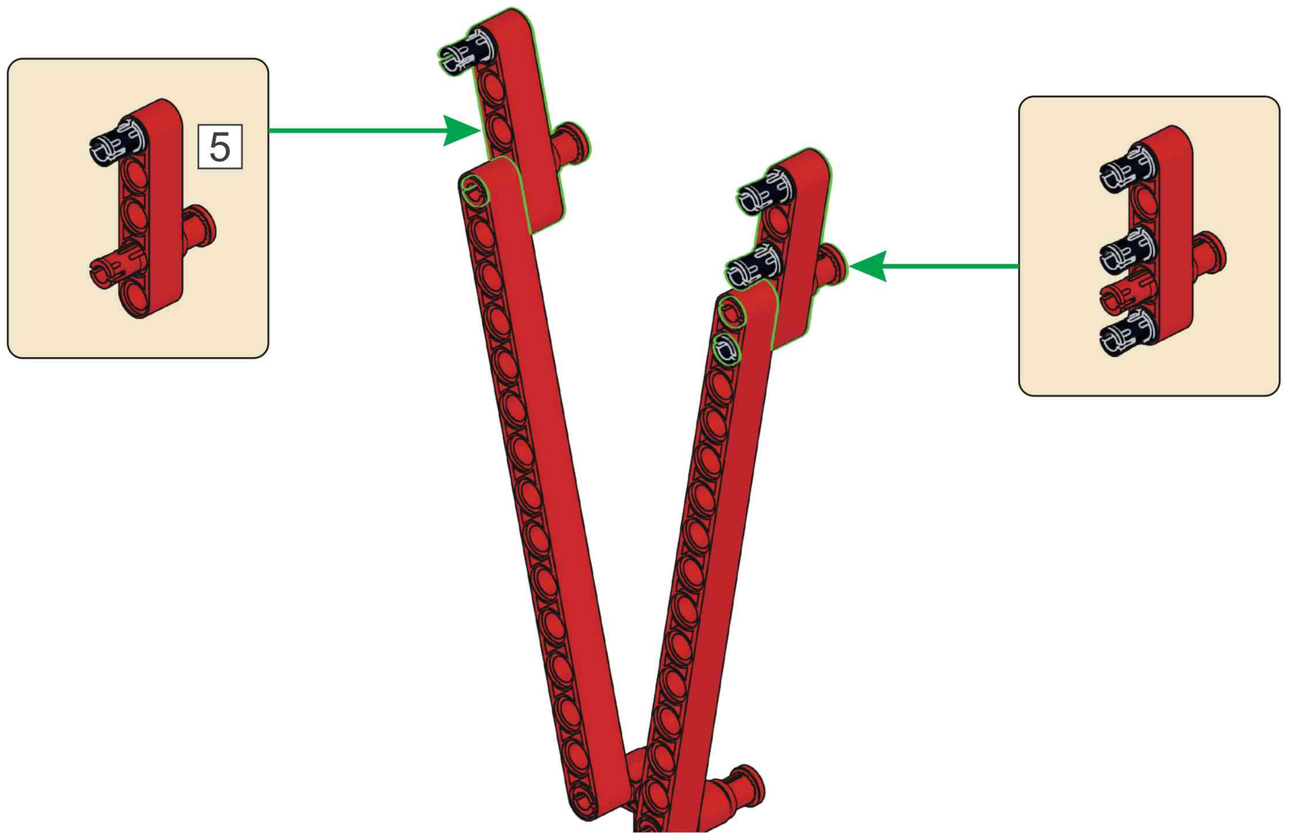

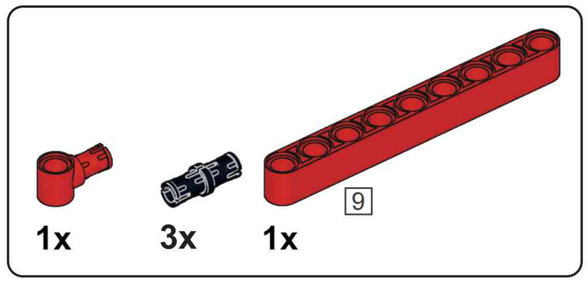

N83

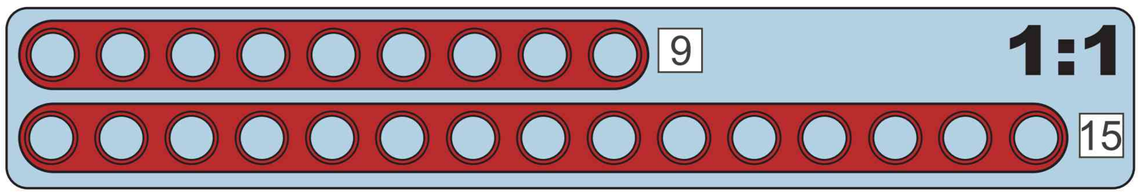

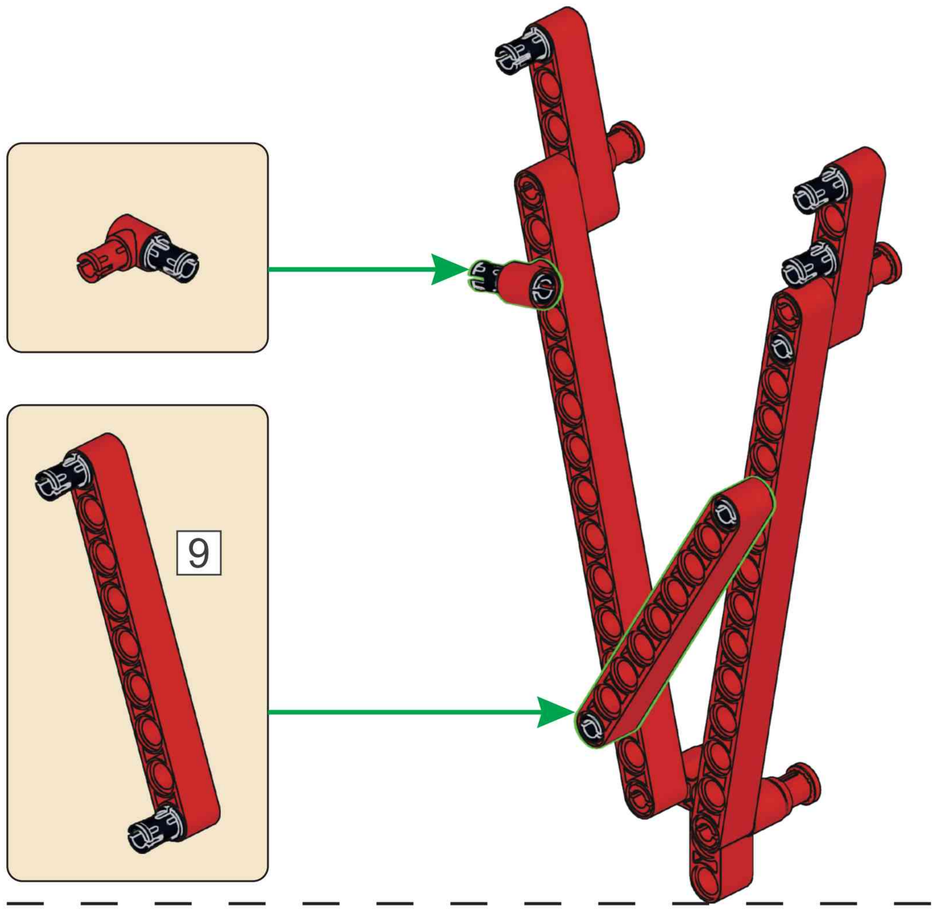

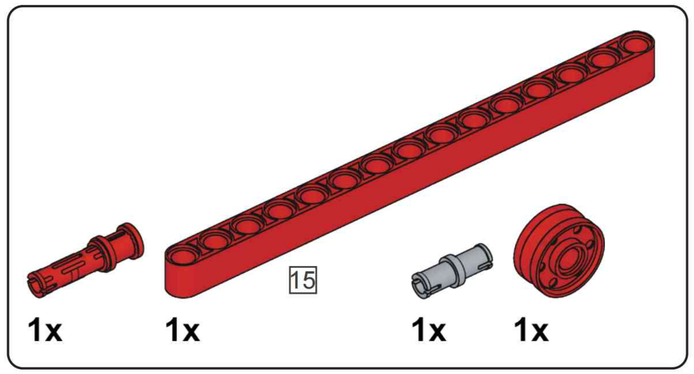

N84

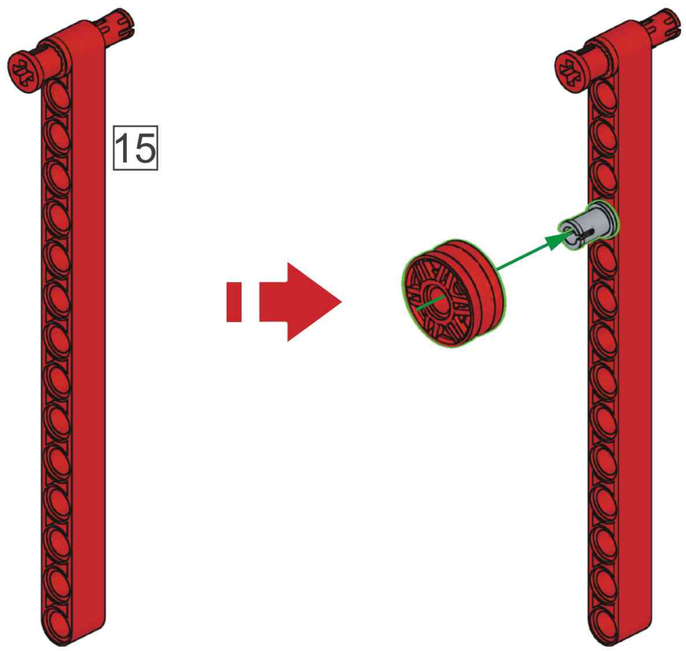

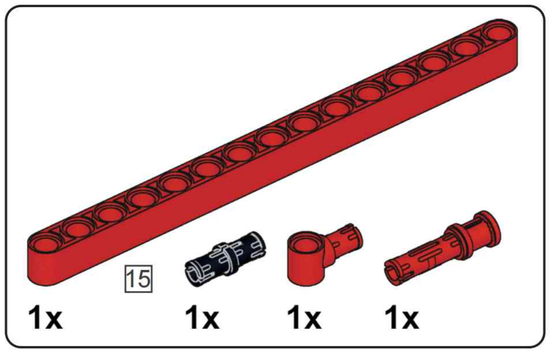

N85

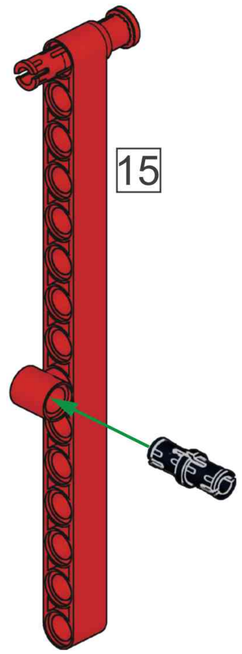

N86

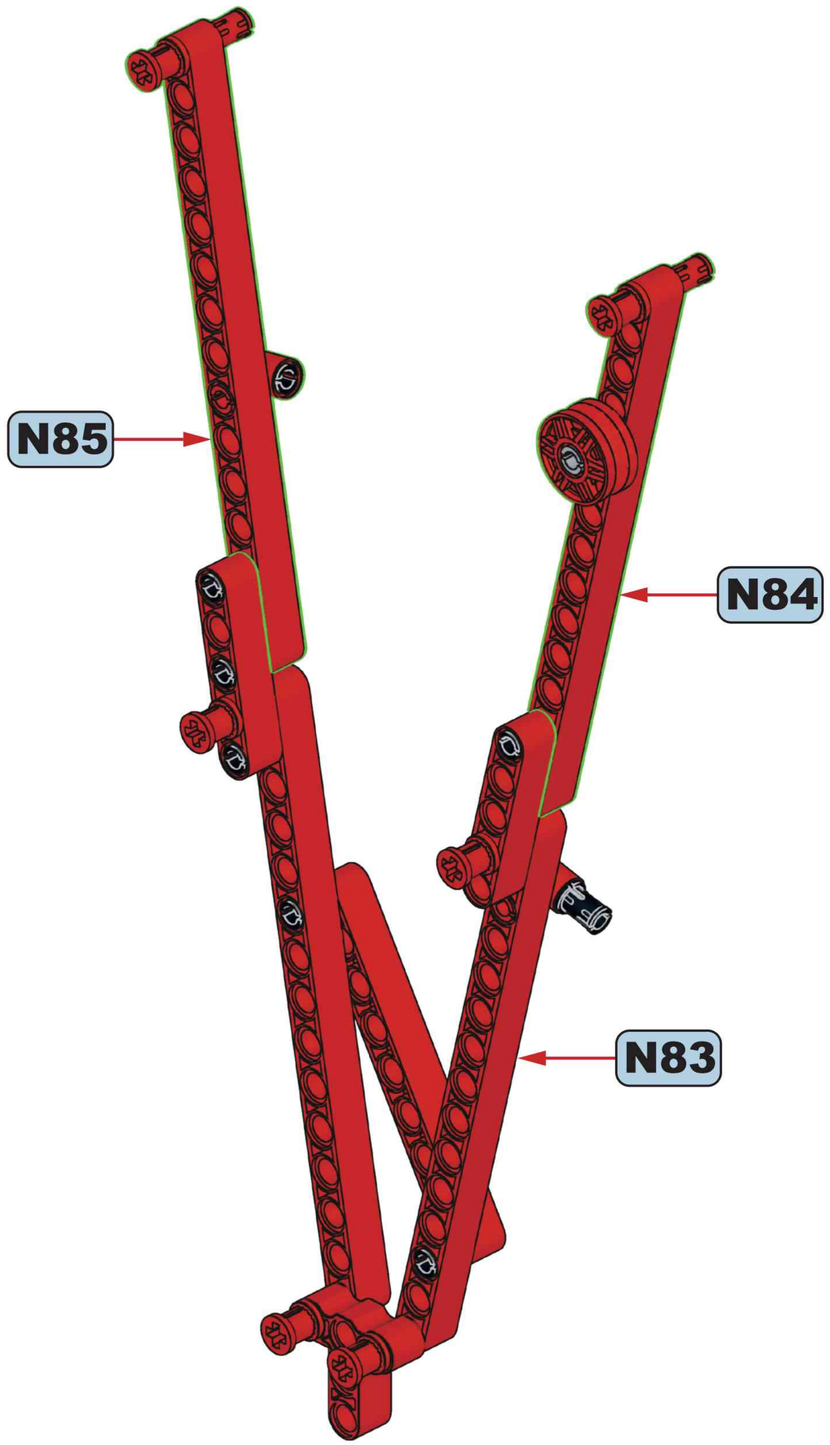

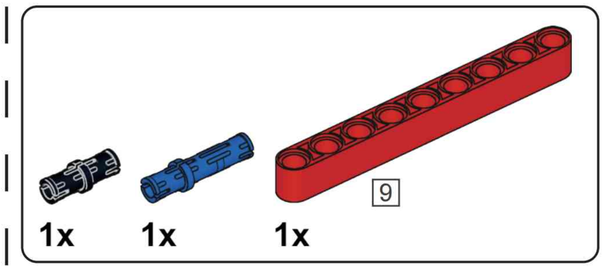

N87

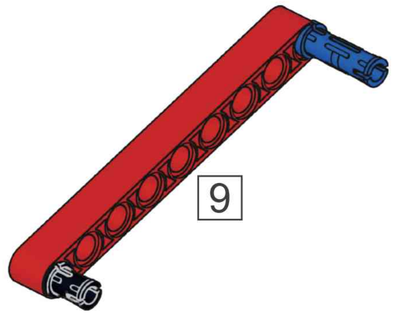

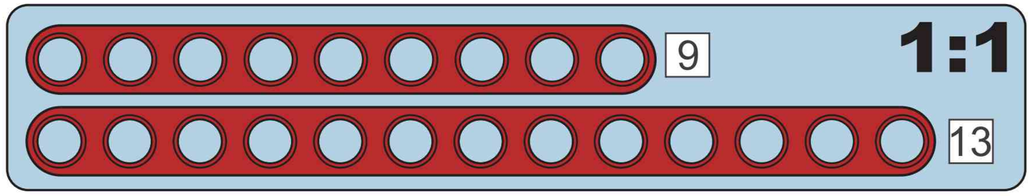

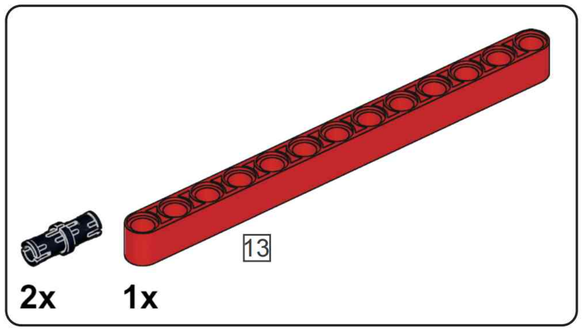

N88

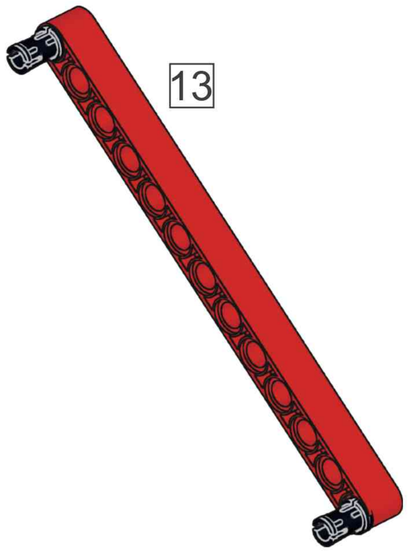

N89

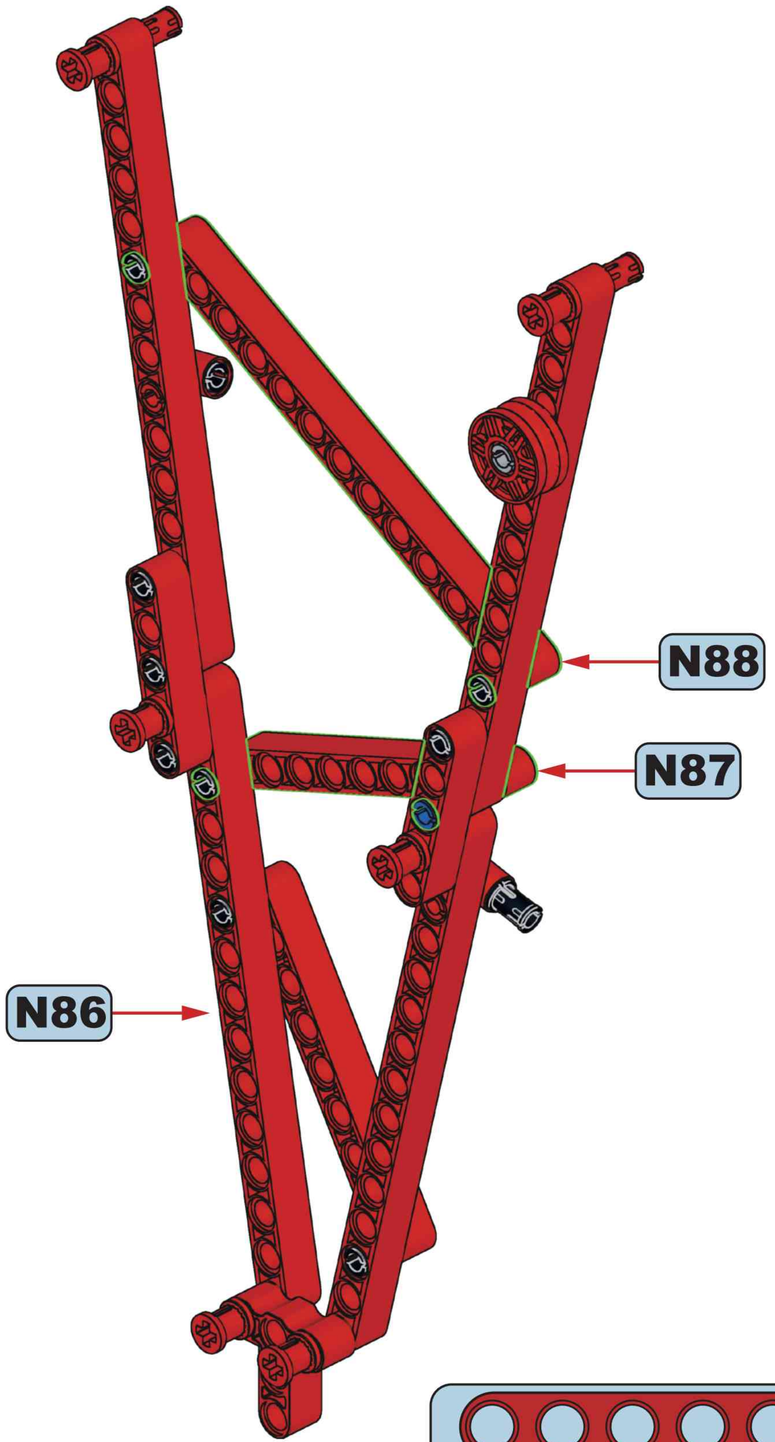

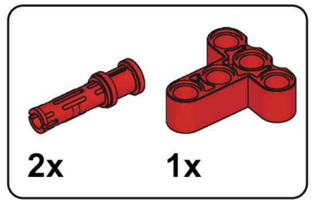

N90

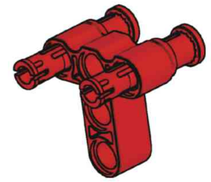

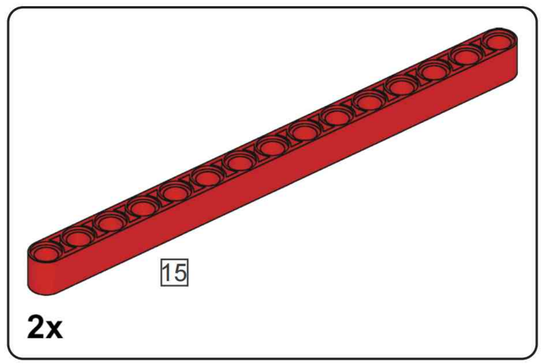

N91

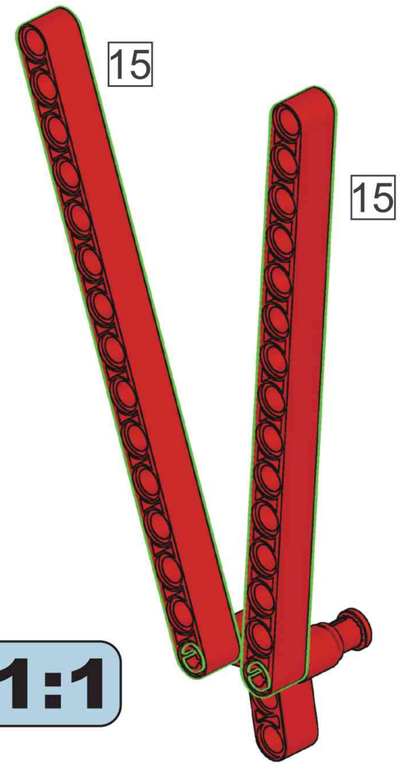

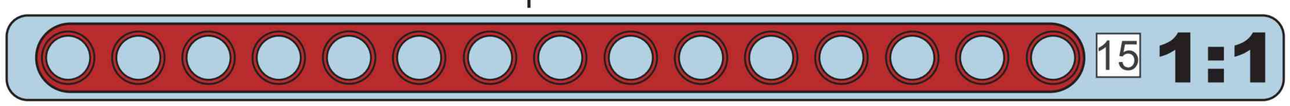

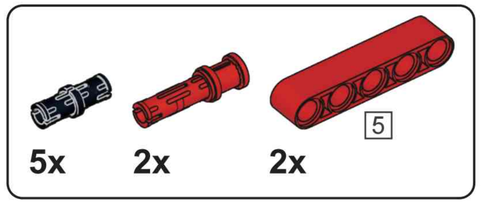

N92

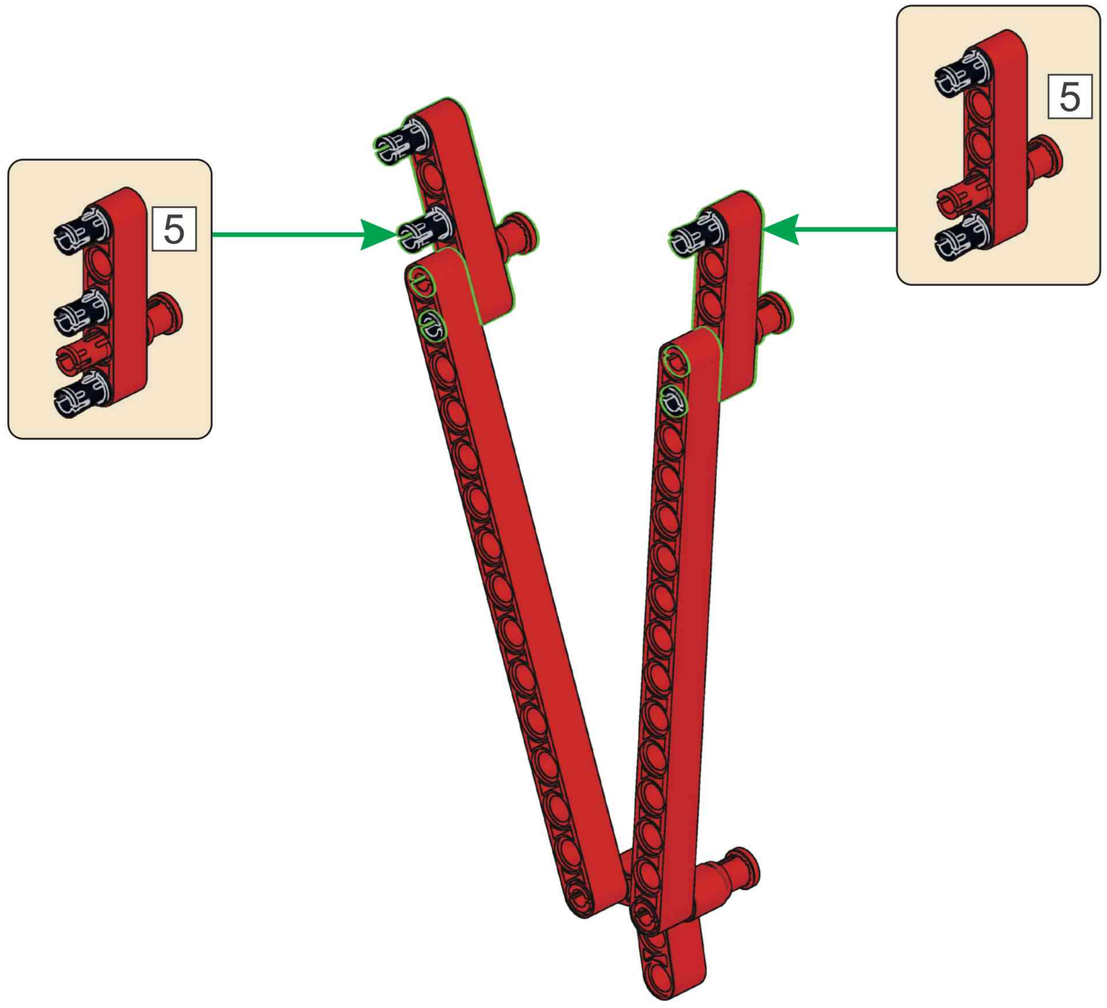

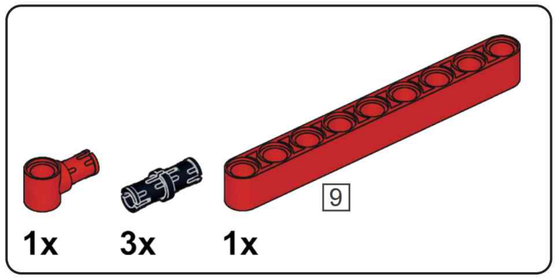

N93

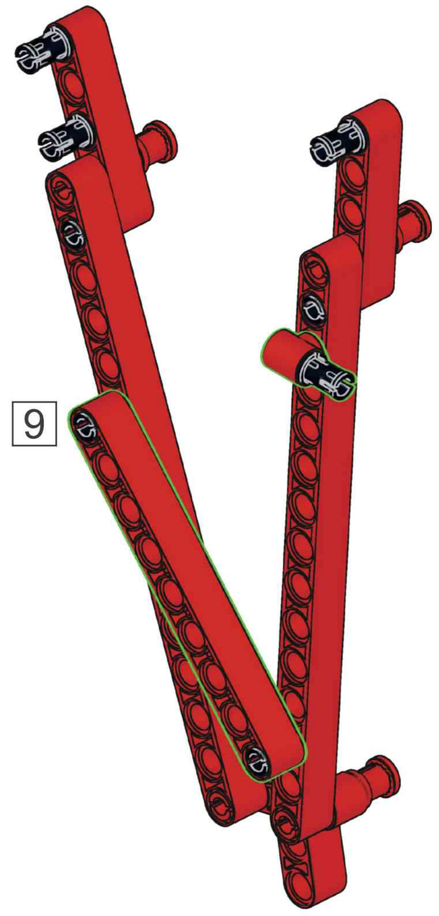

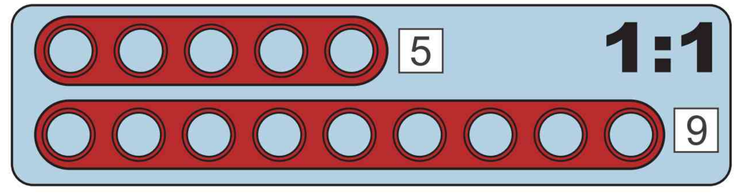

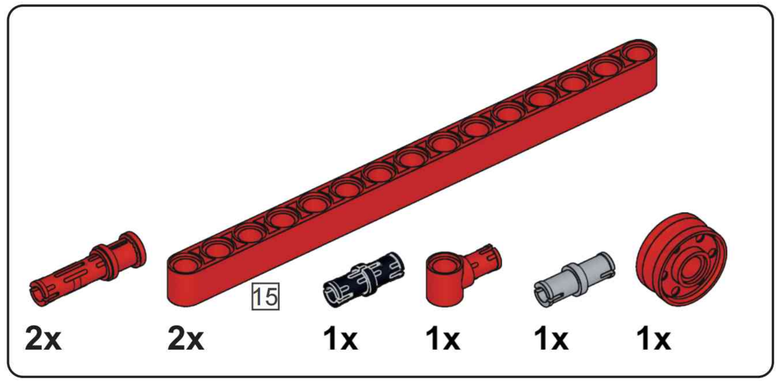

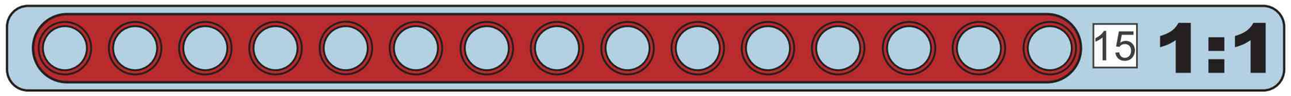

N94

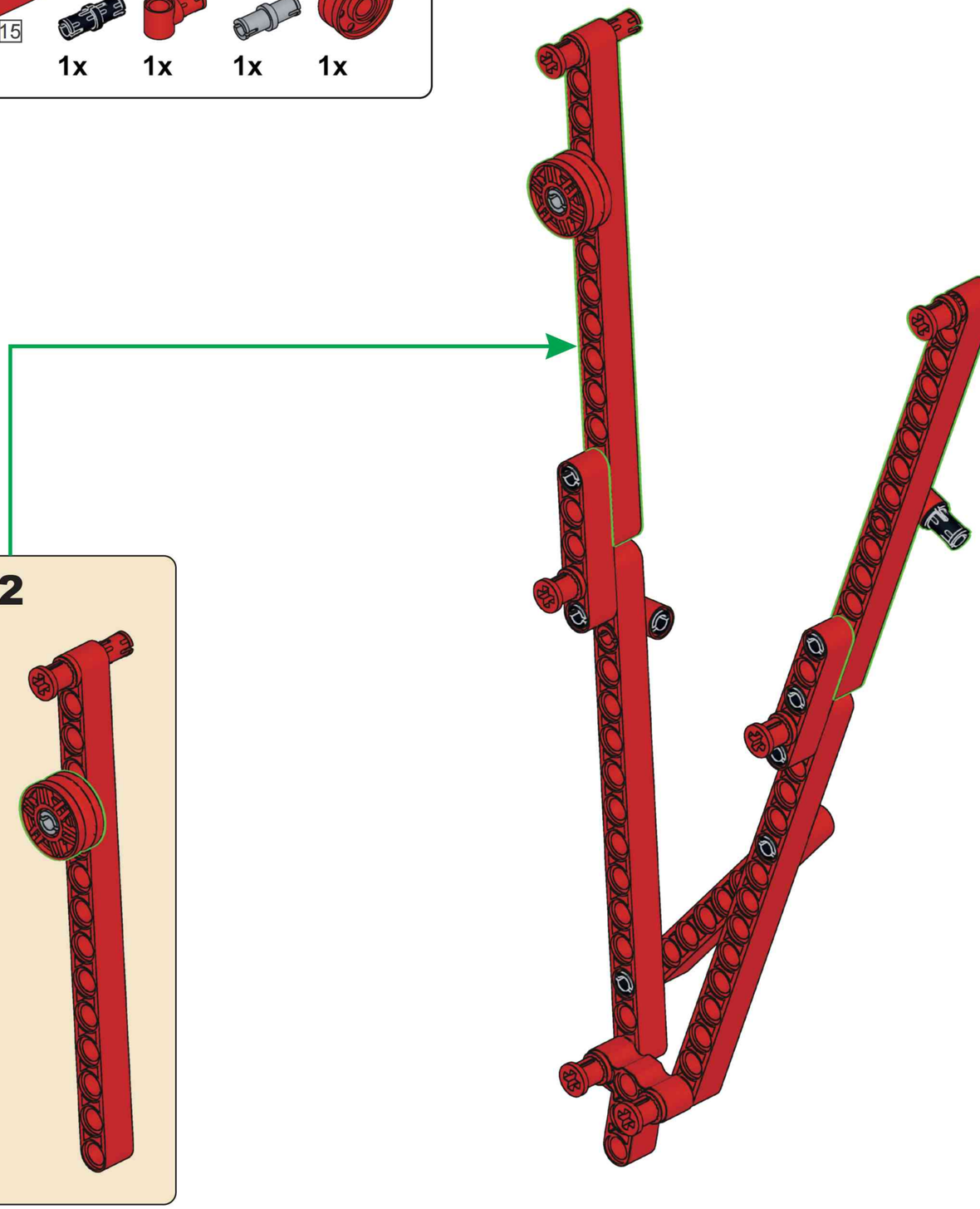

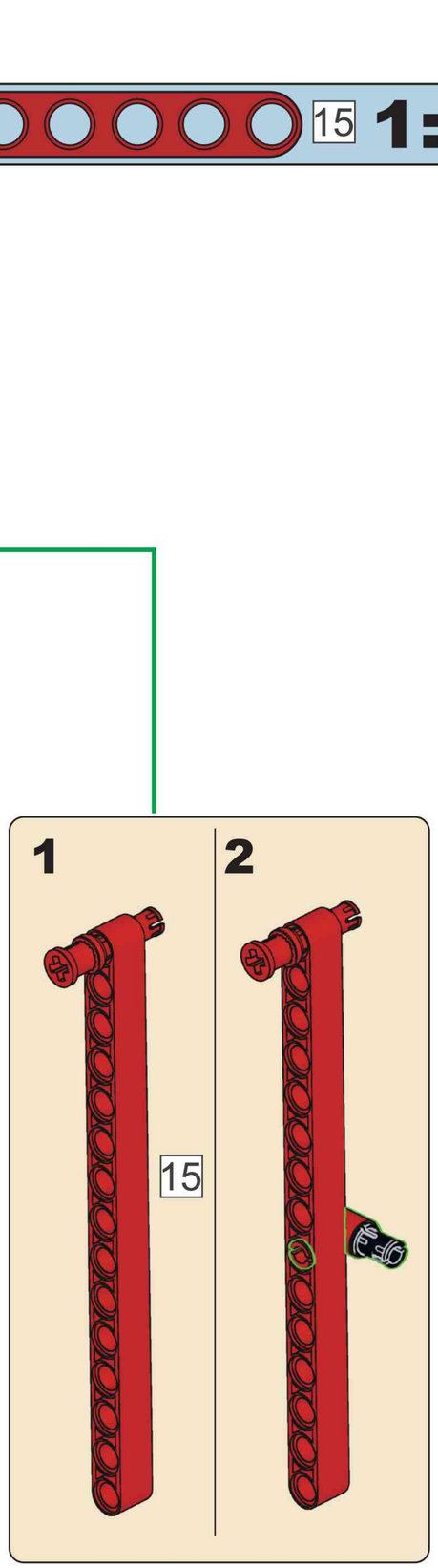

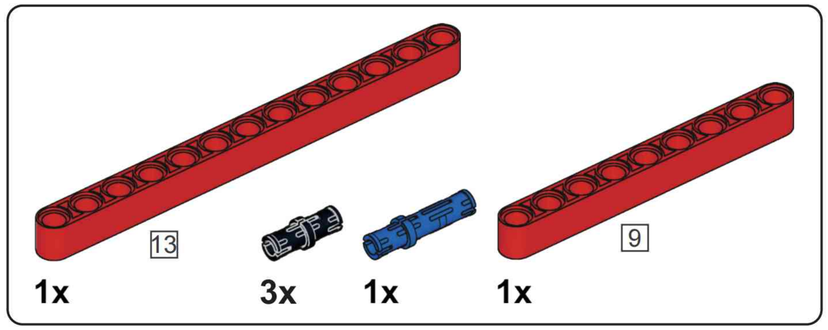

N95

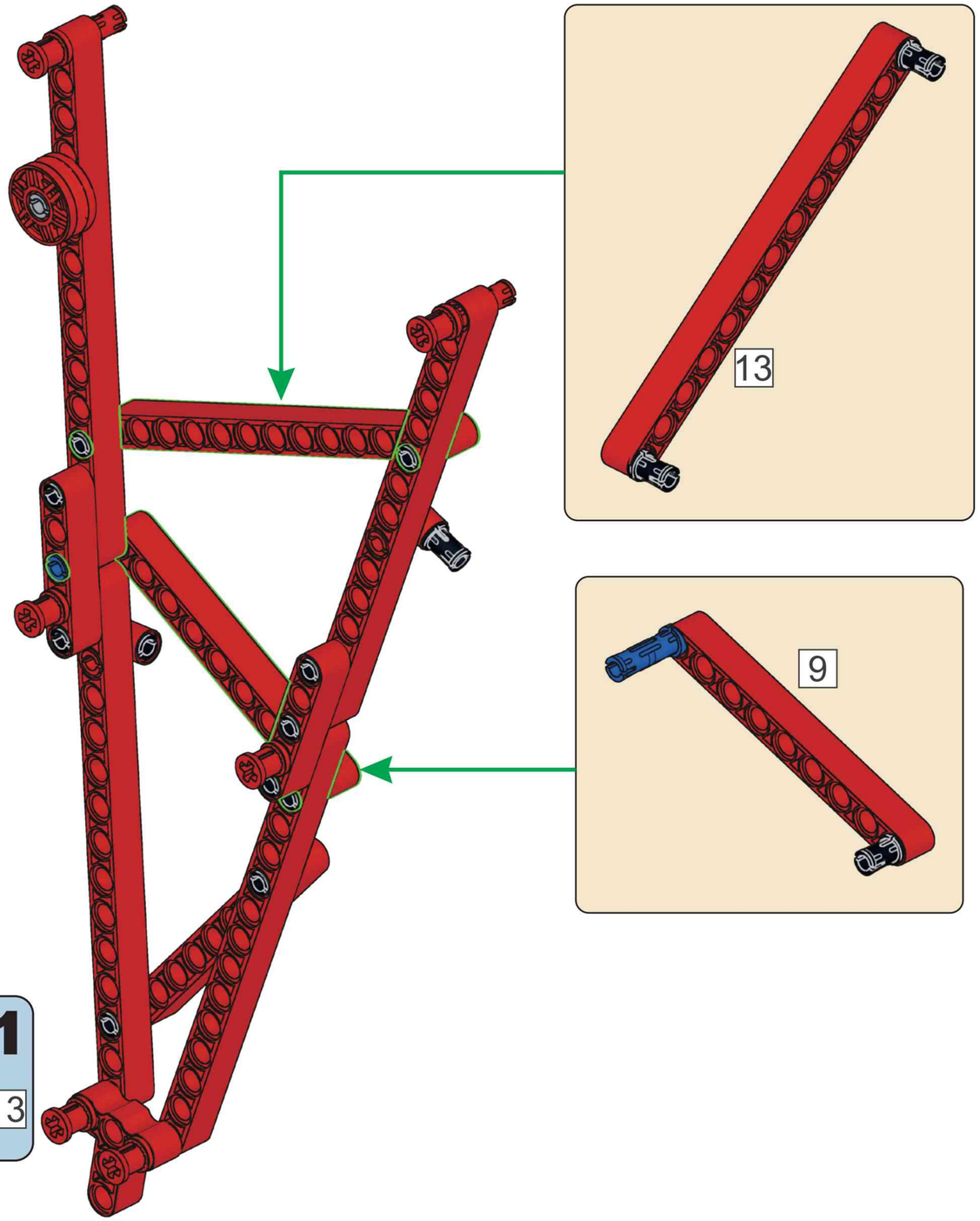

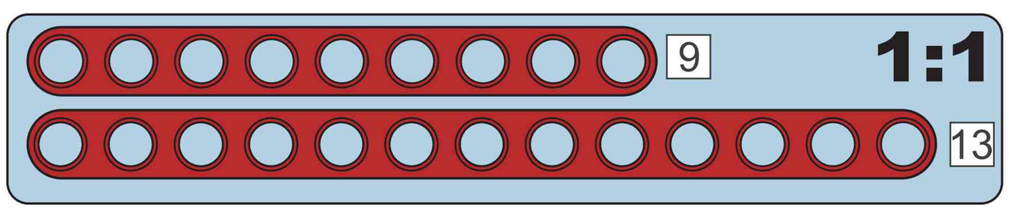

N96

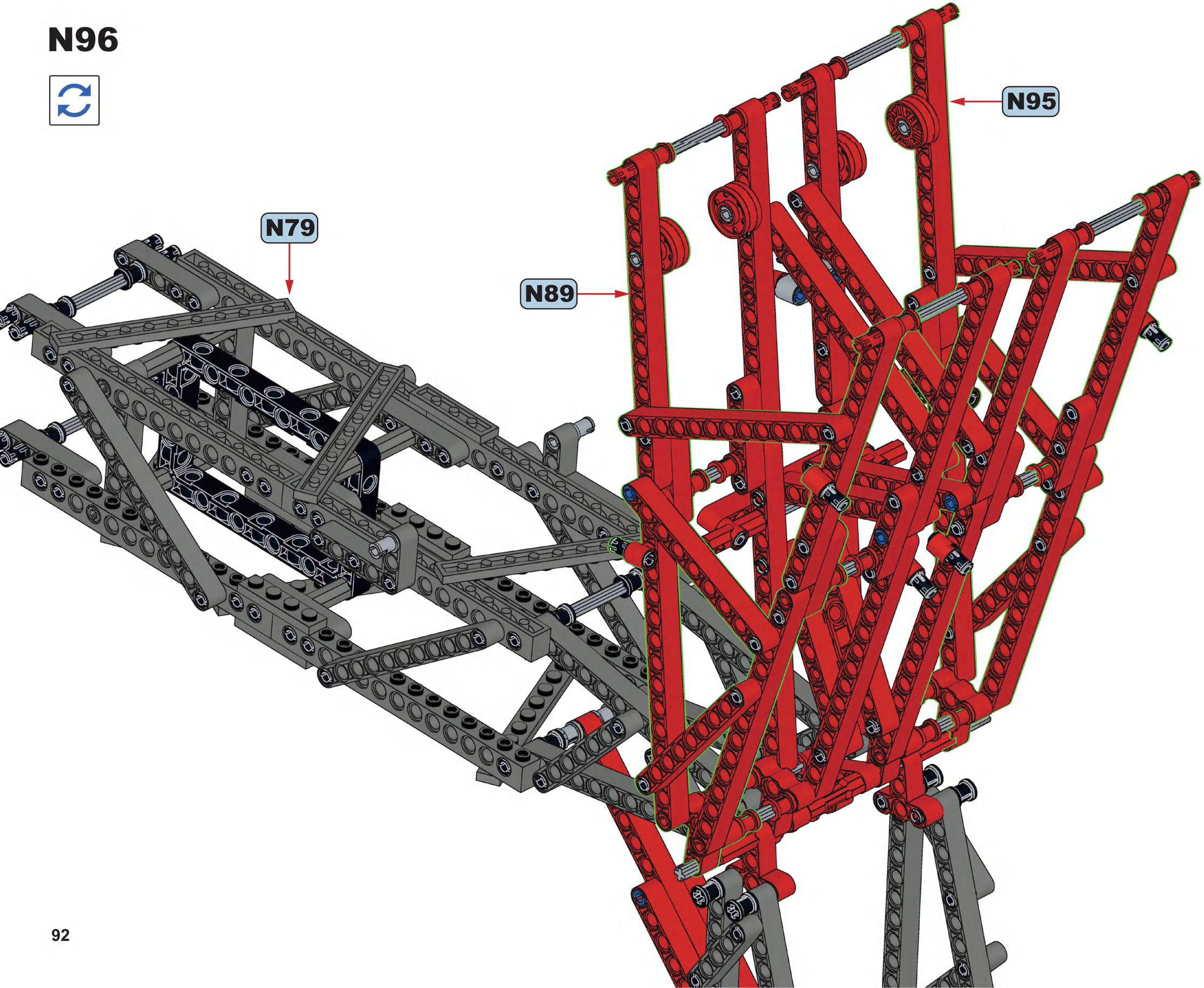

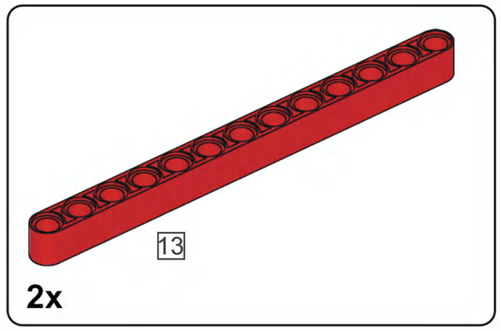

N97

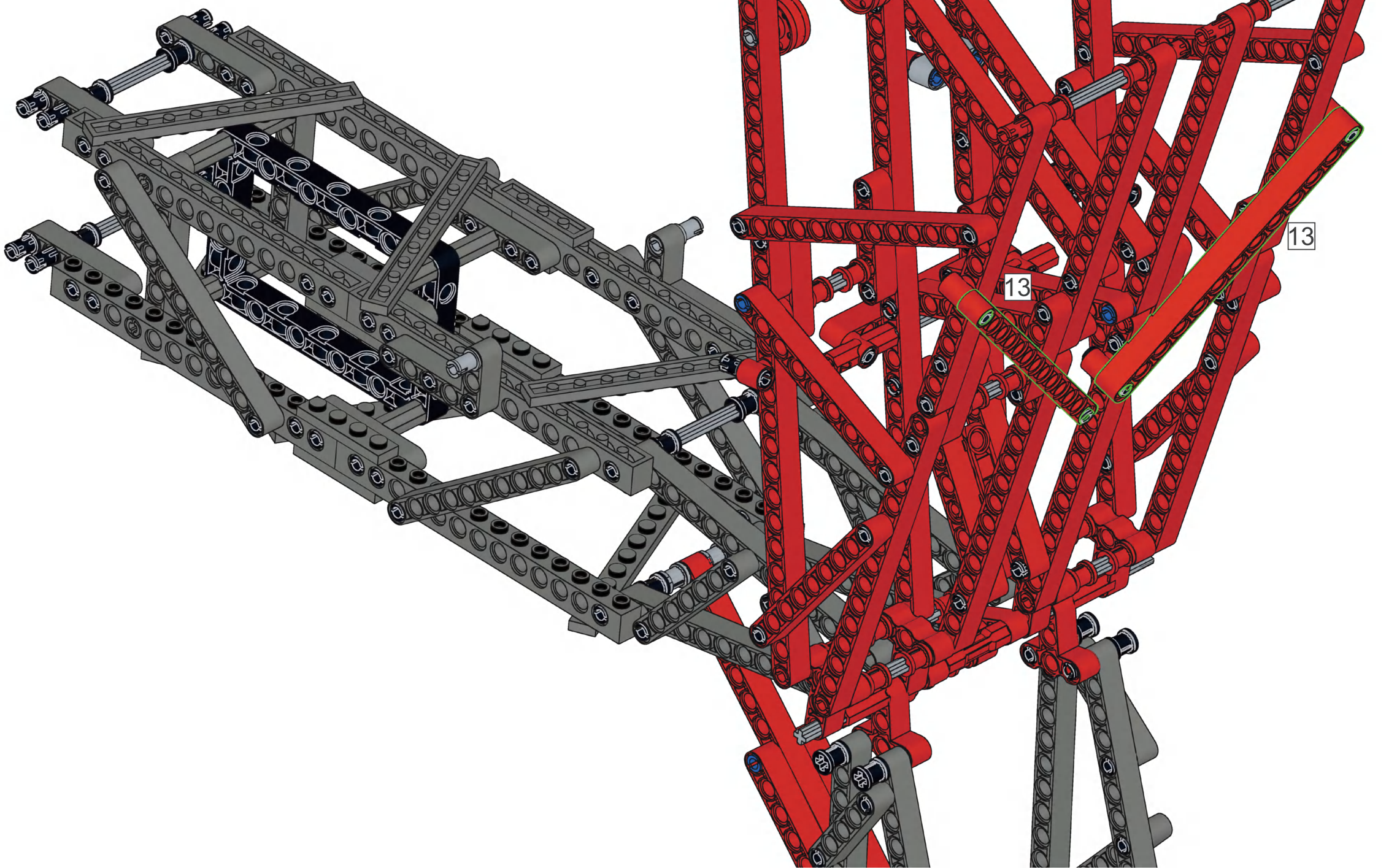

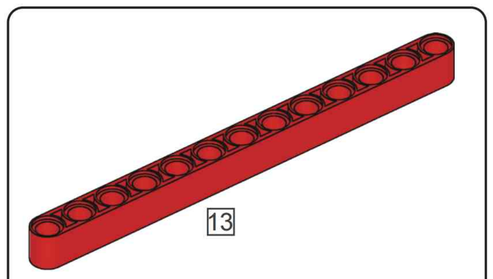

N98



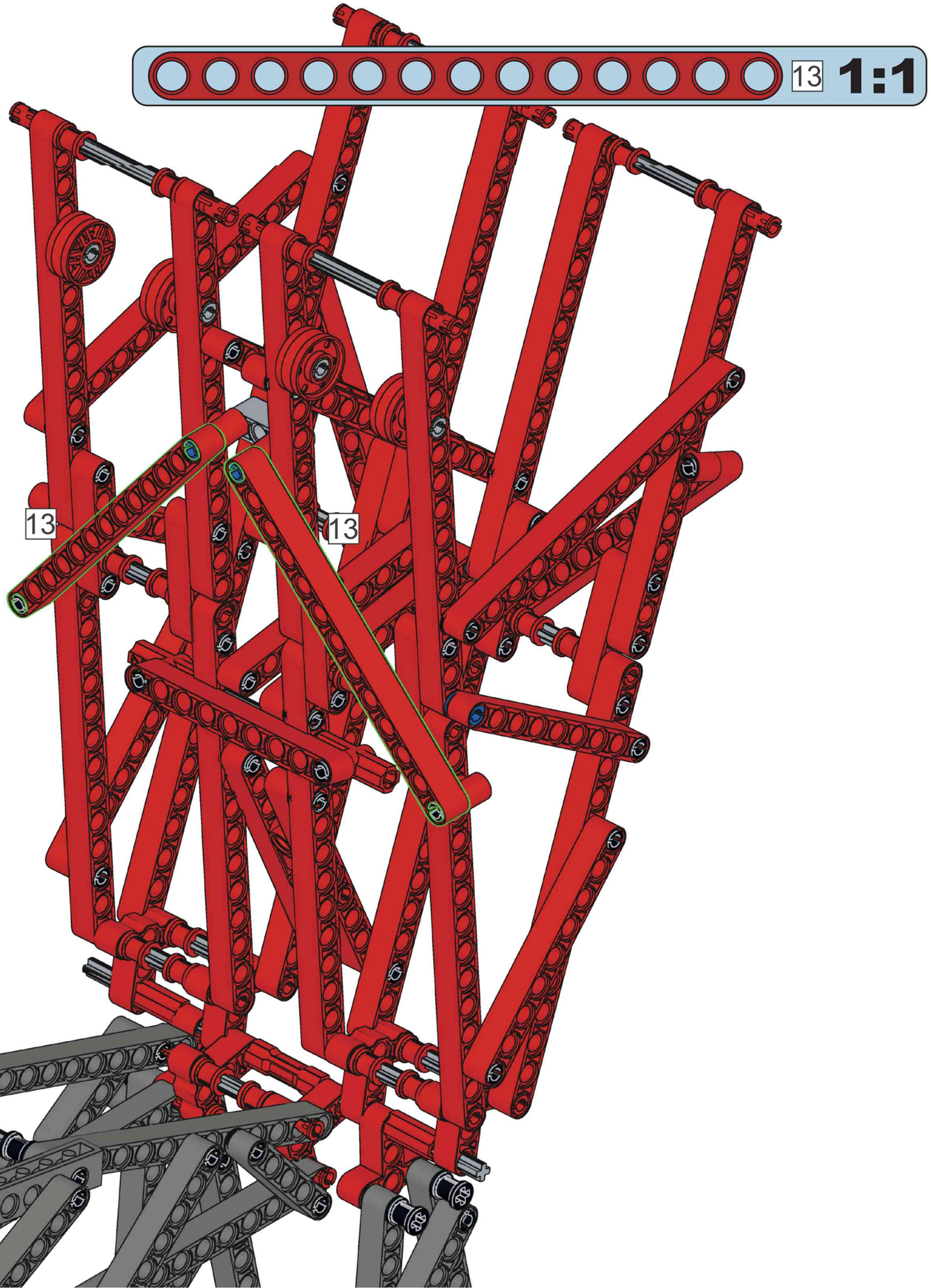

2x

N99

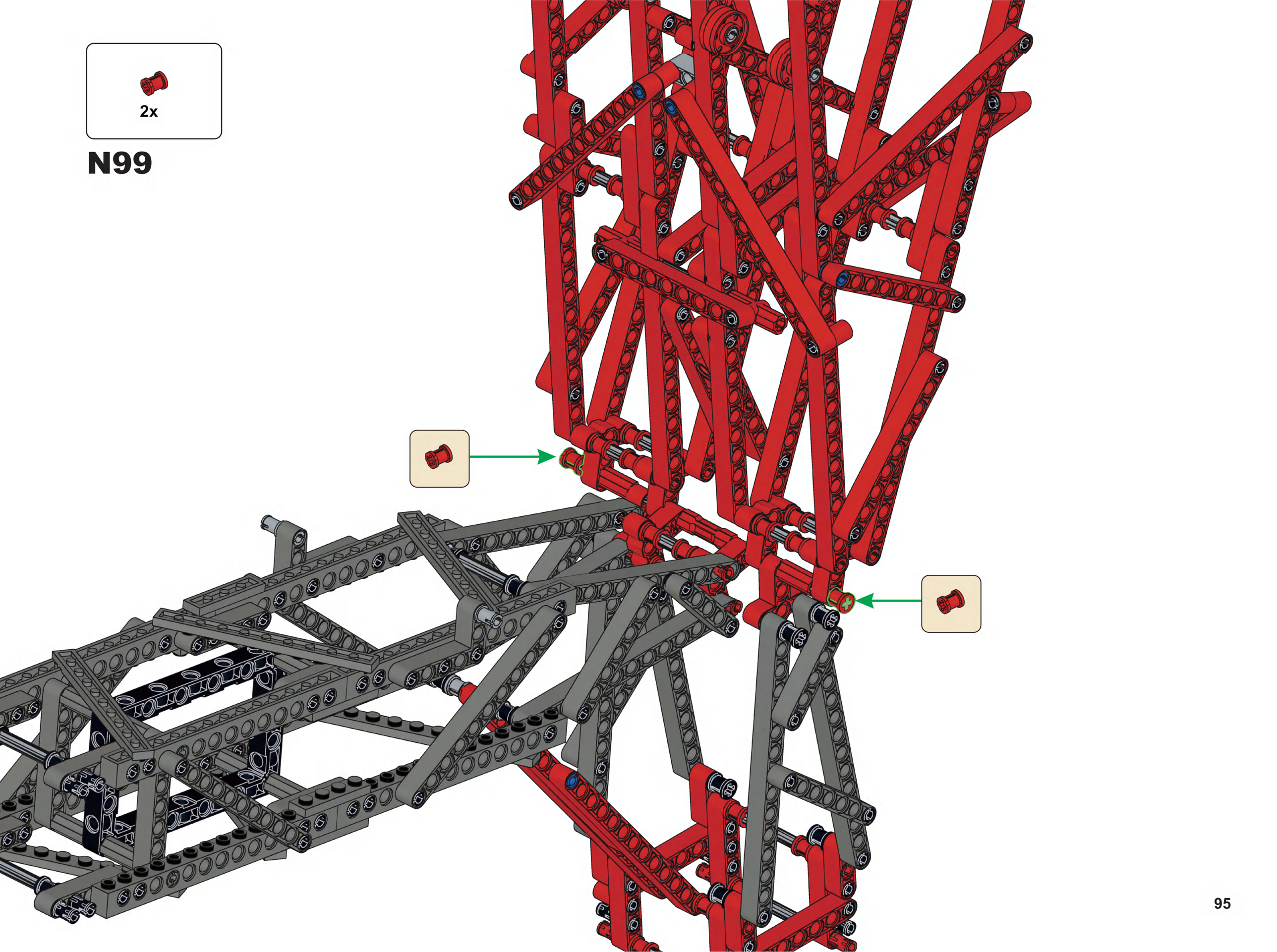

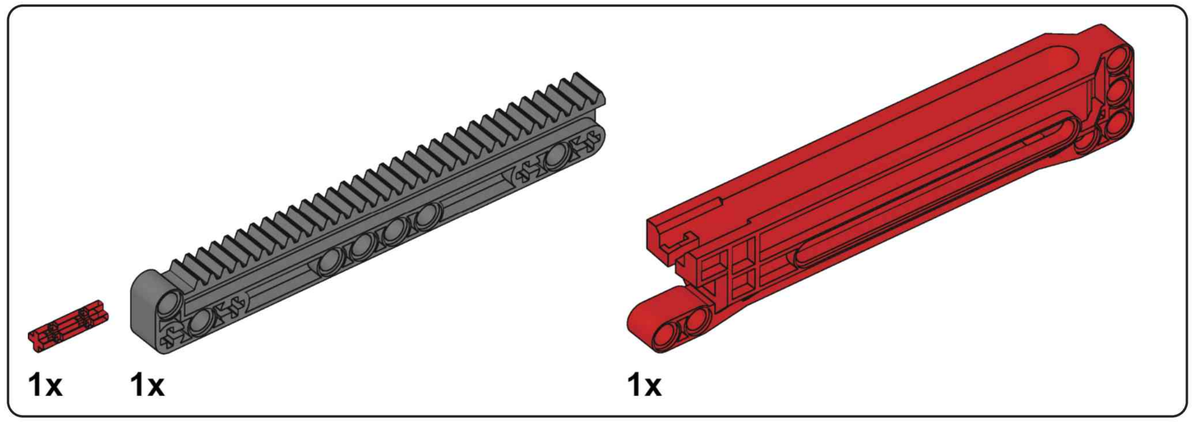

N100

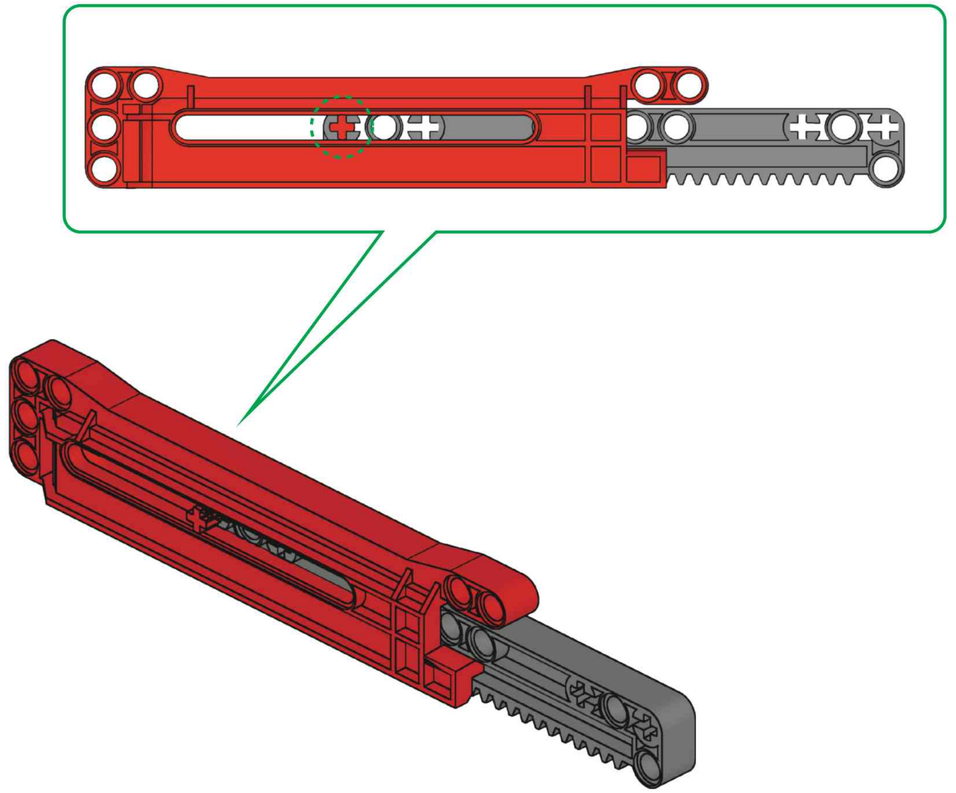

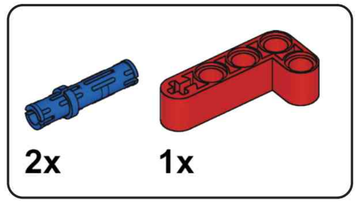

N101

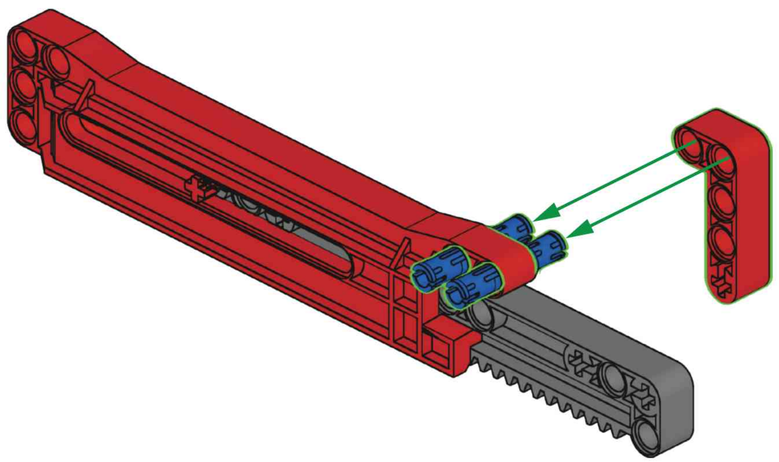

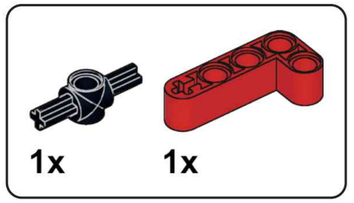

N102

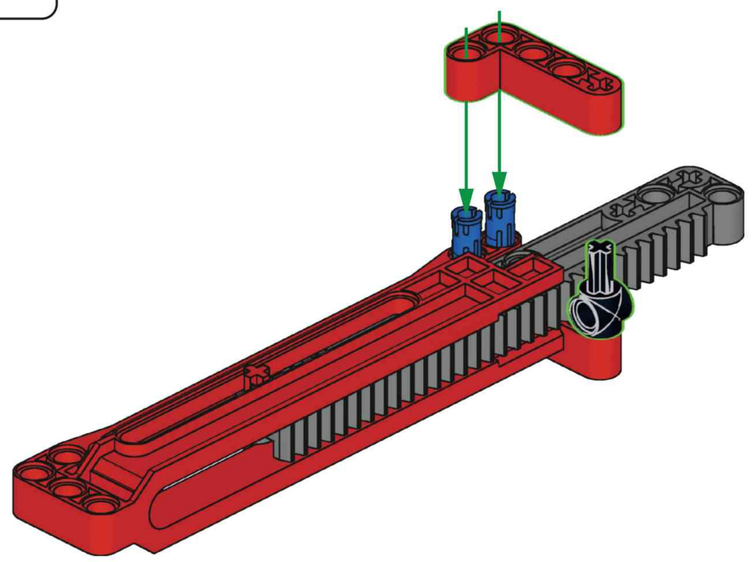

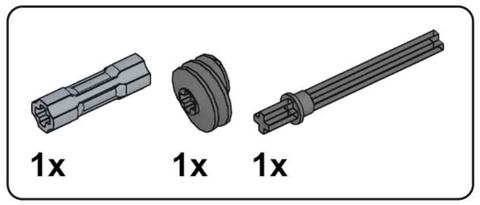

N103

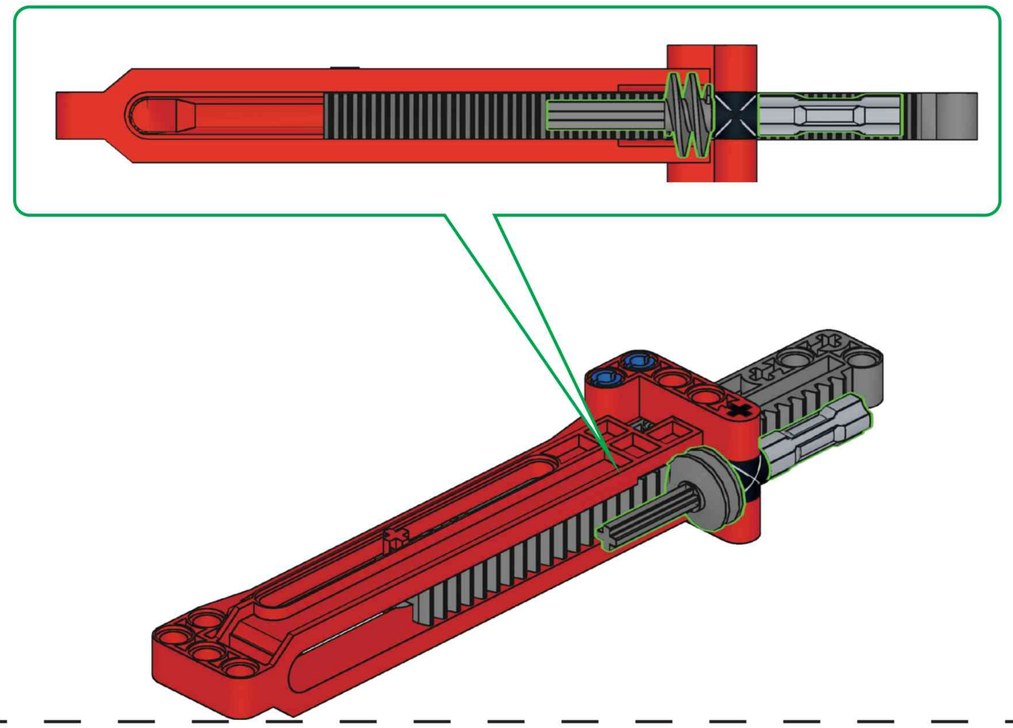

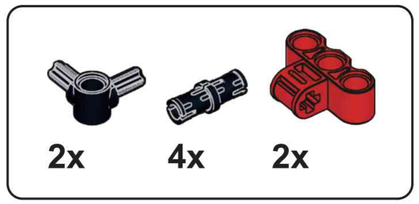

N104

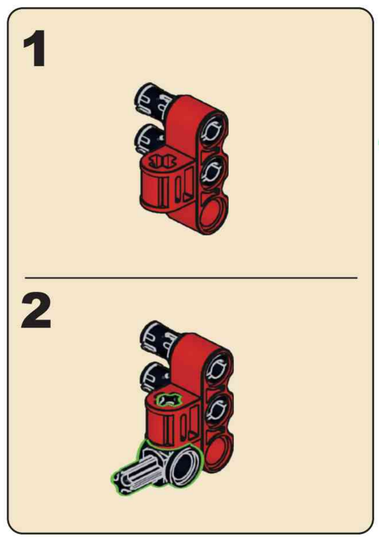

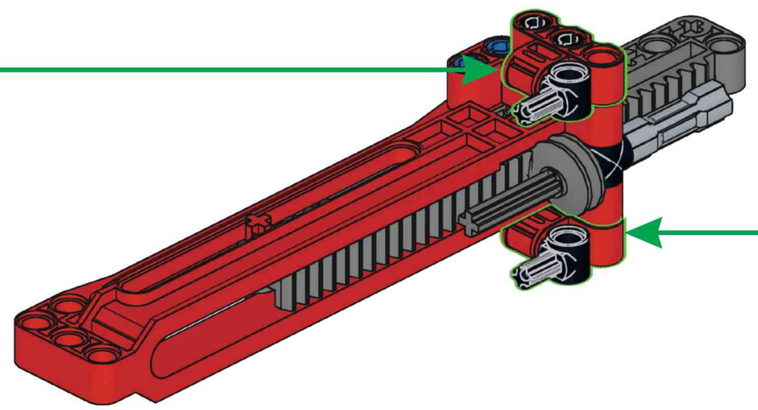

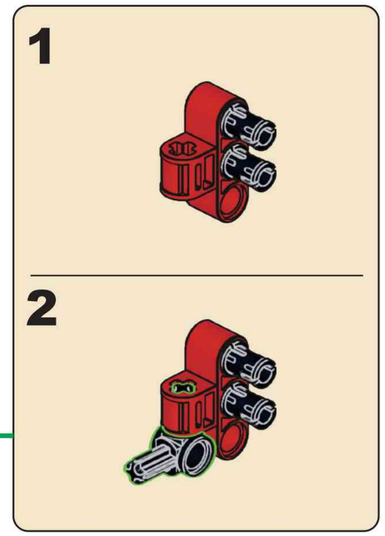

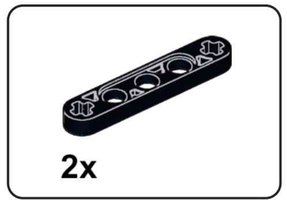

N105

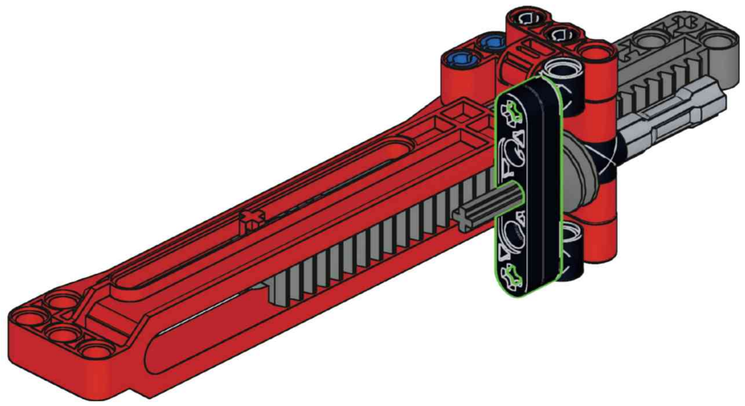

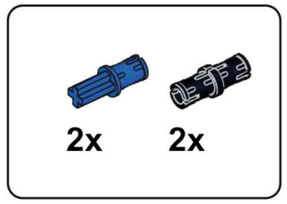

N106

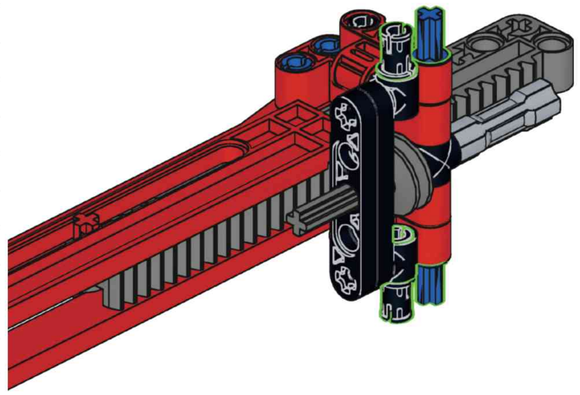

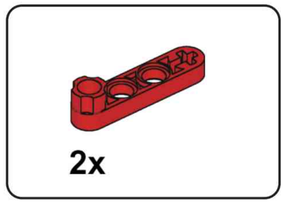

N107

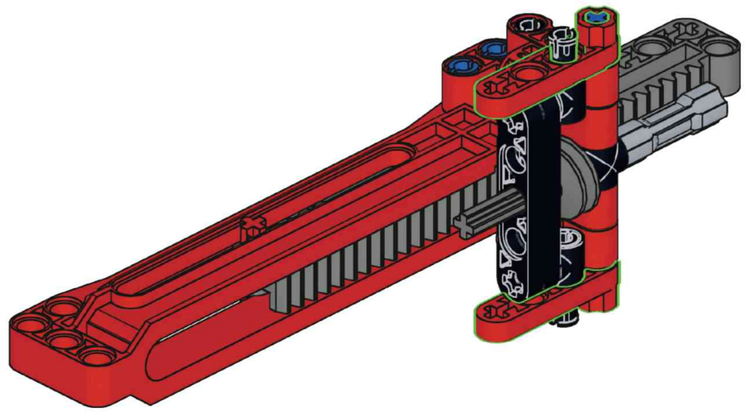

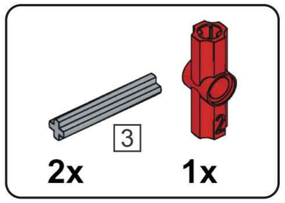

N108

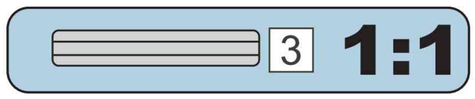

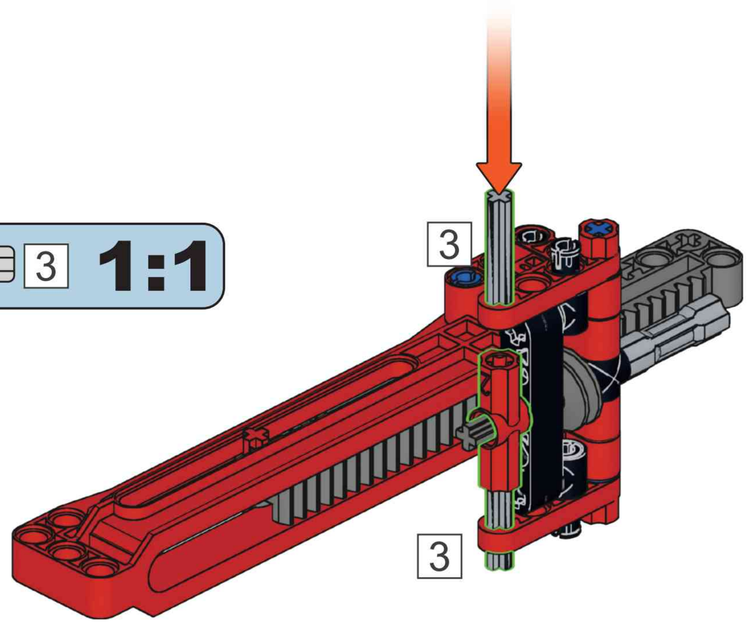

N109

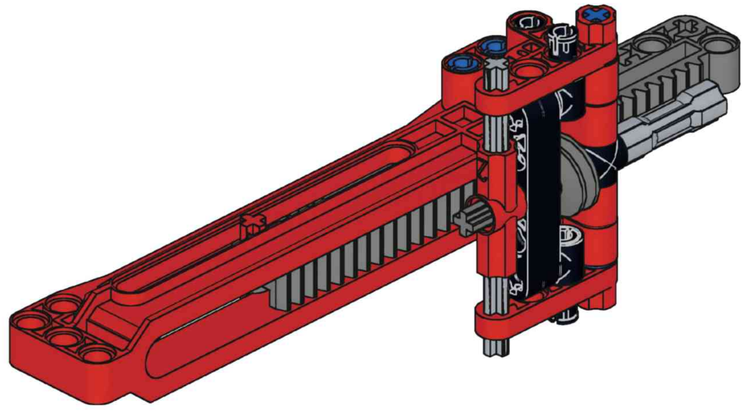

x2

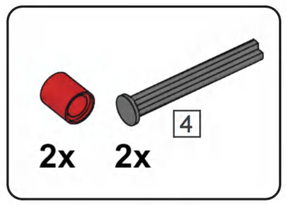

N110

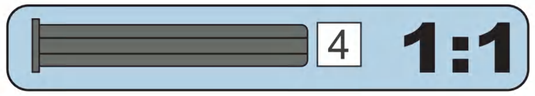

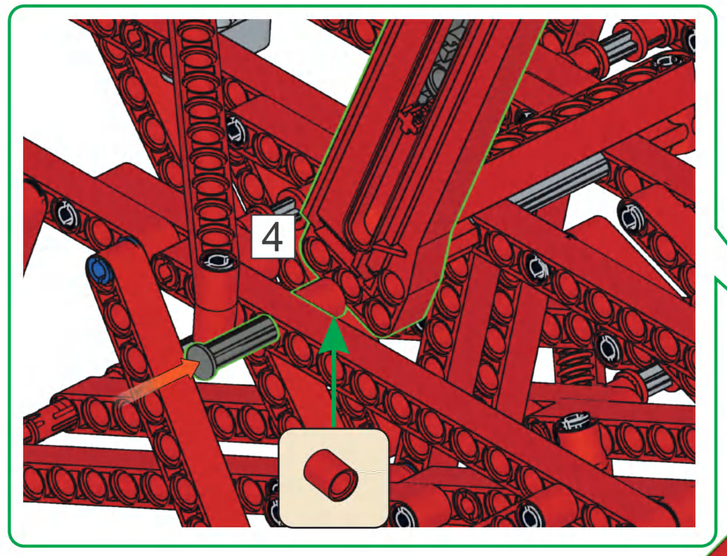

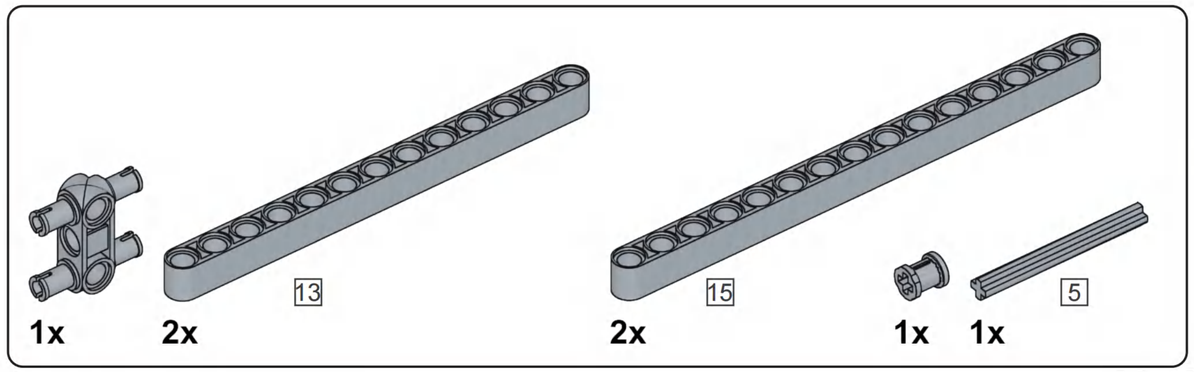

N111

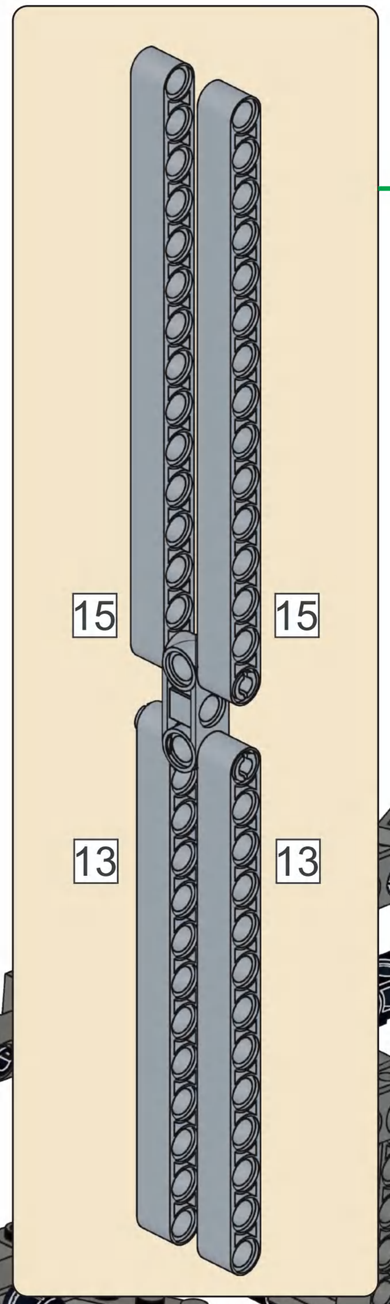

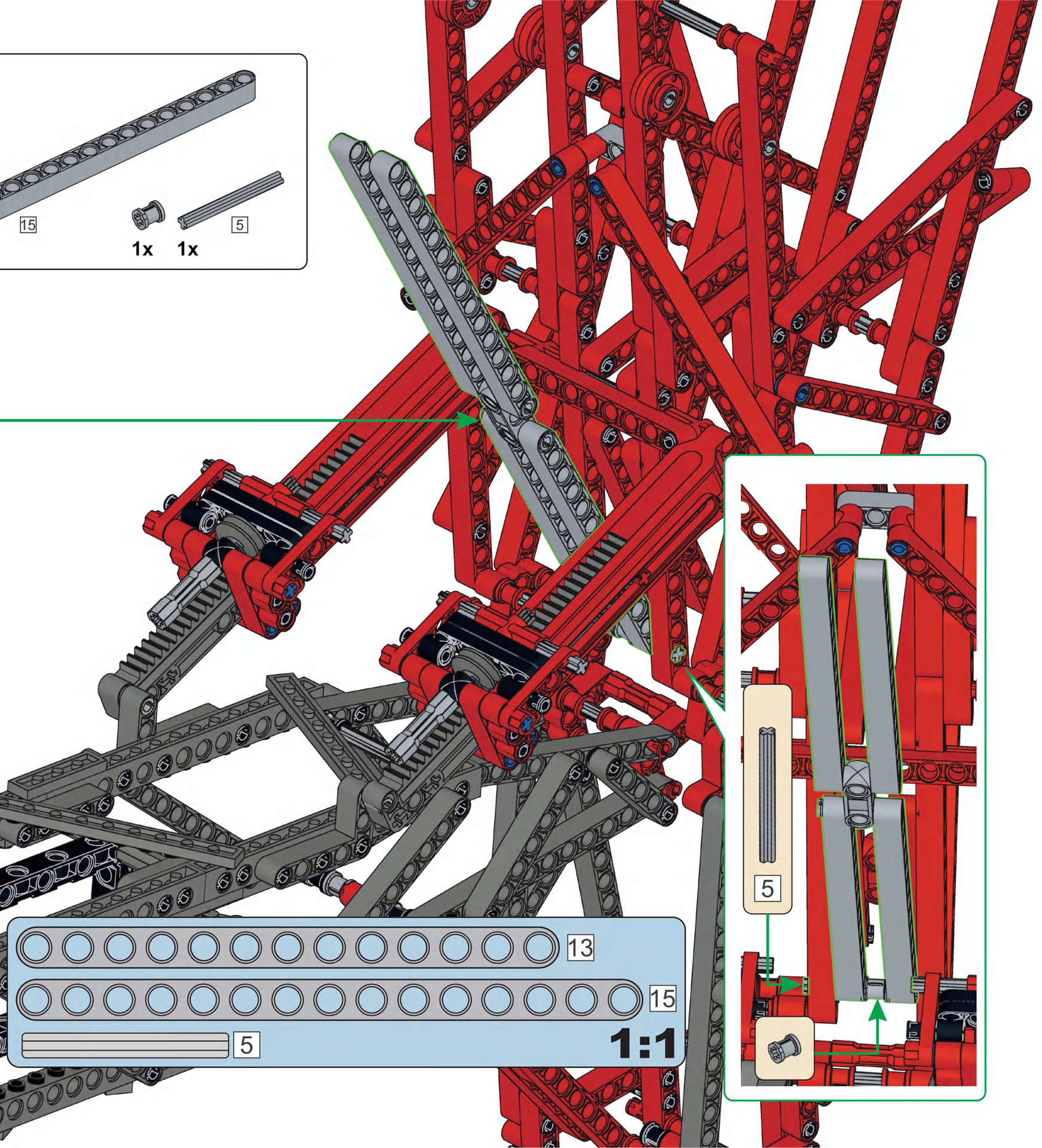

15



+

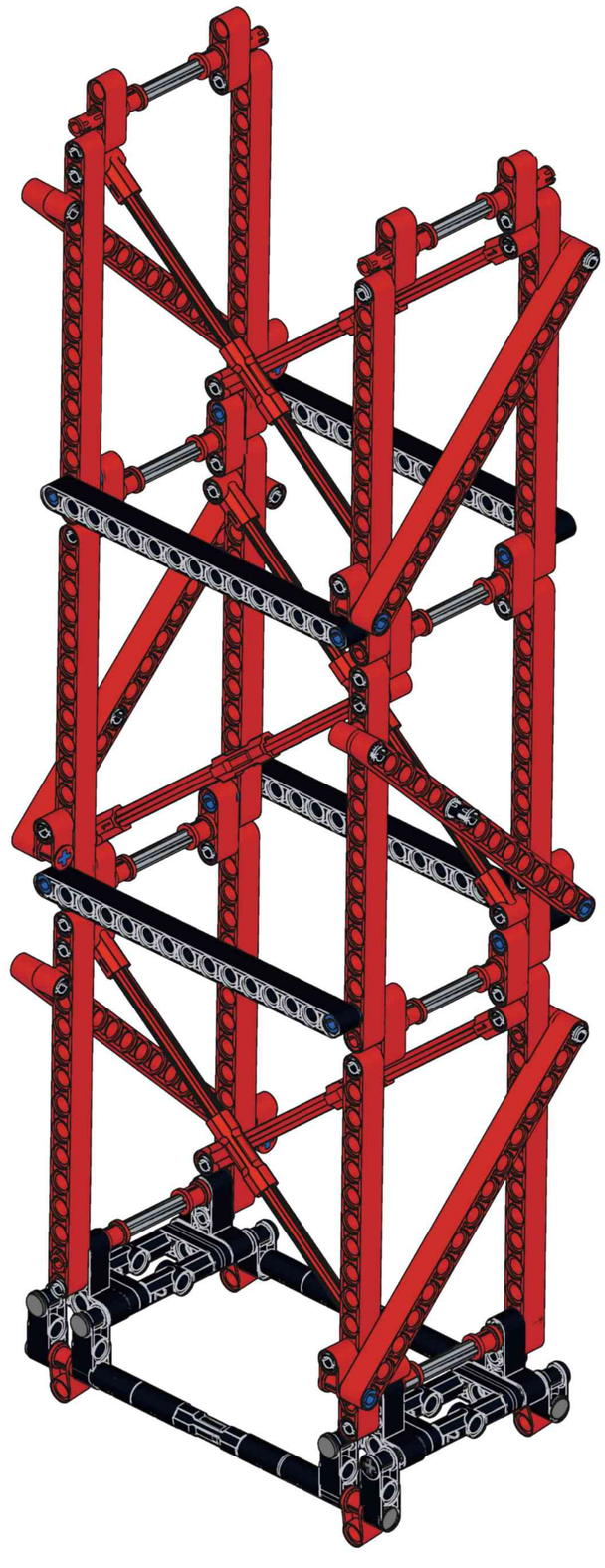

o

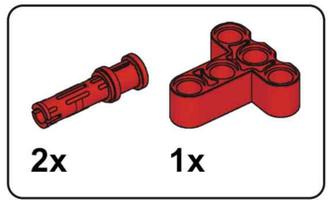

01

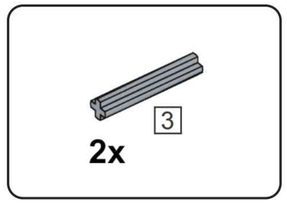

02

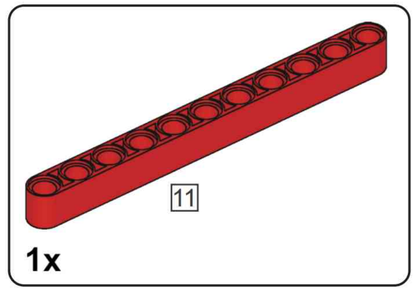

03

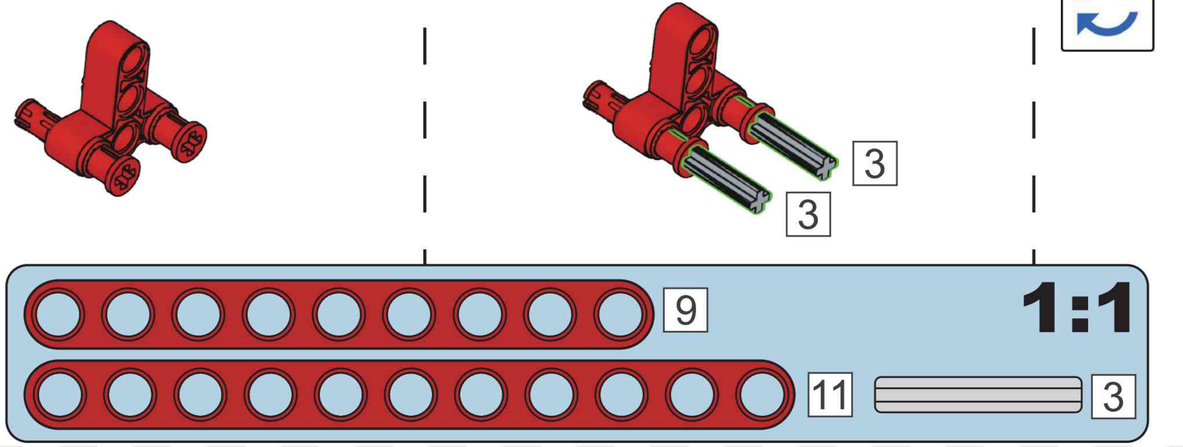

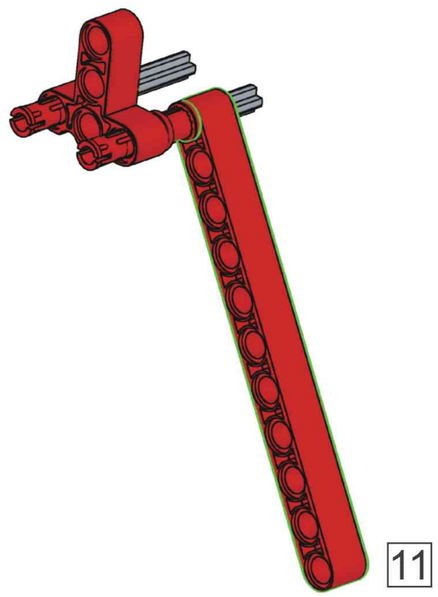

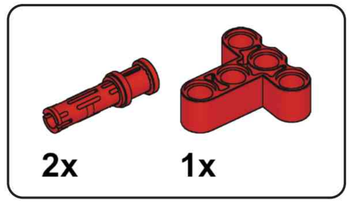

04

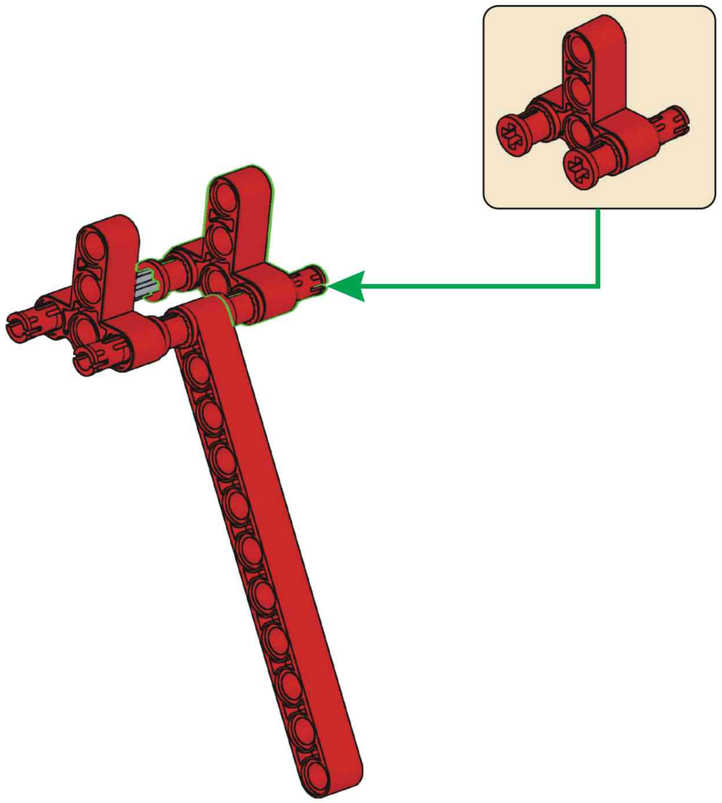

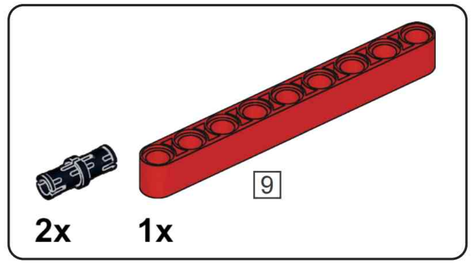

05

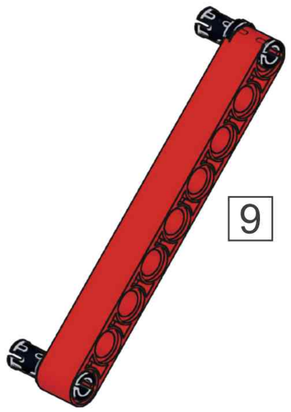

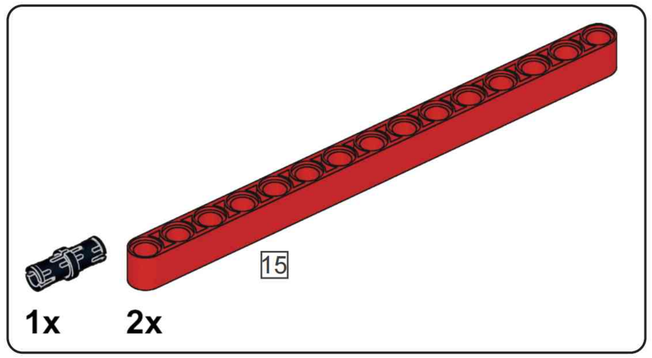

06

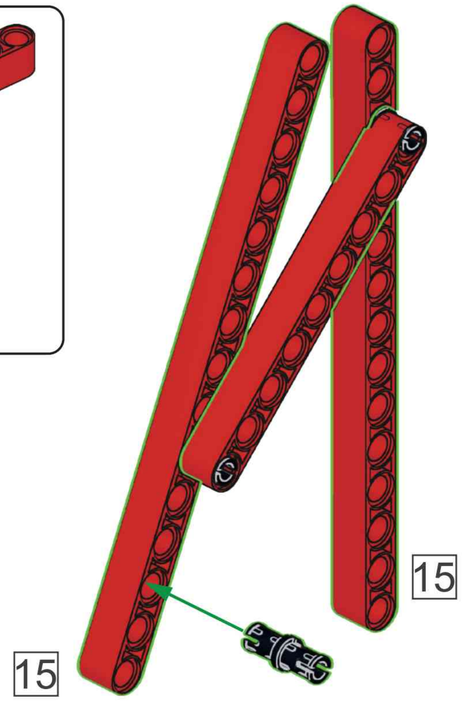

07

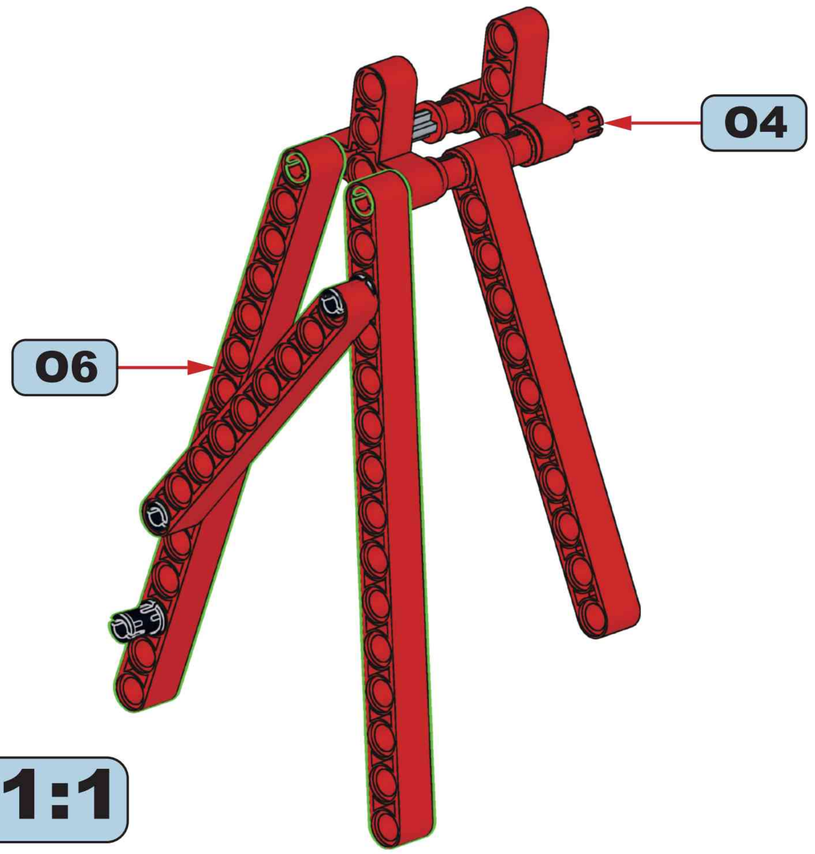

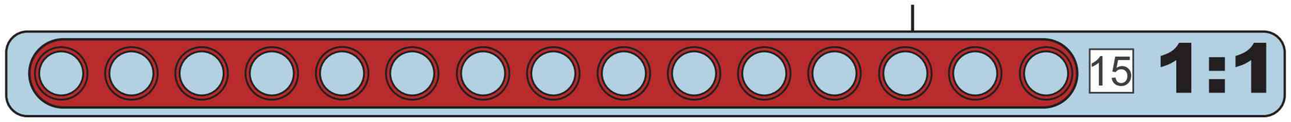

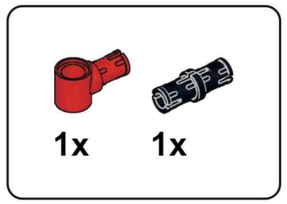

08

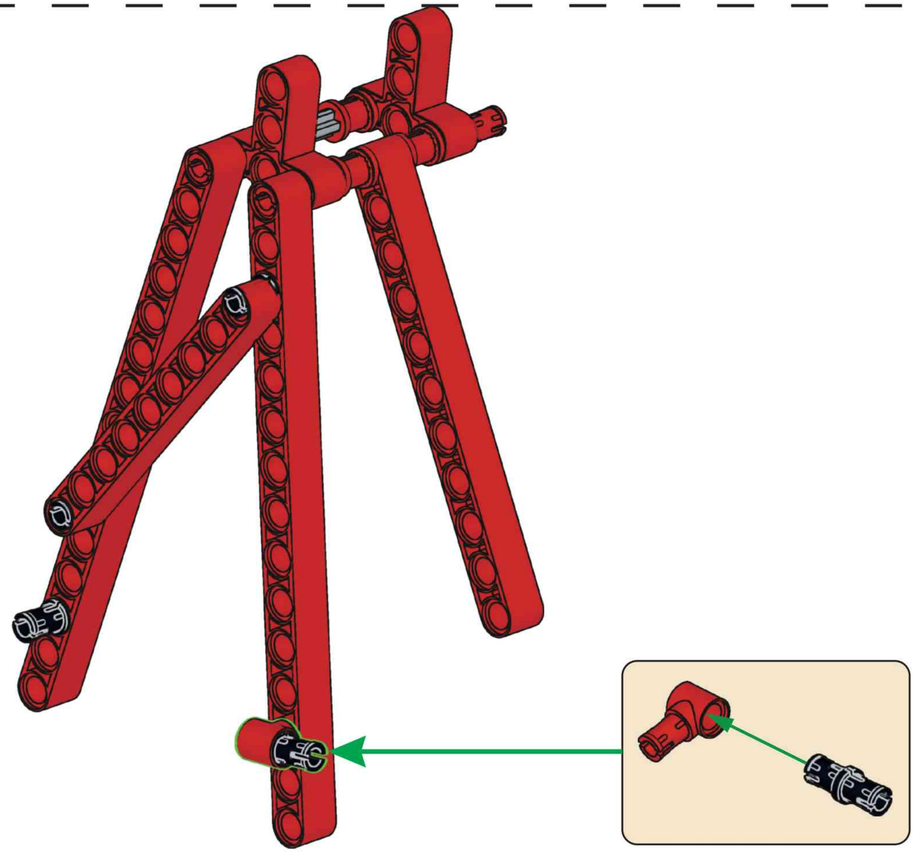

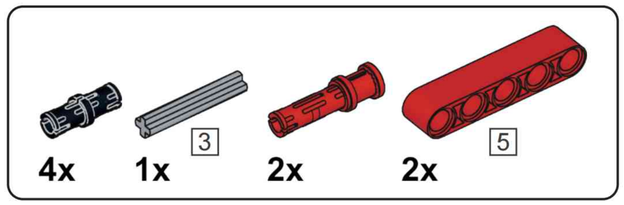

09

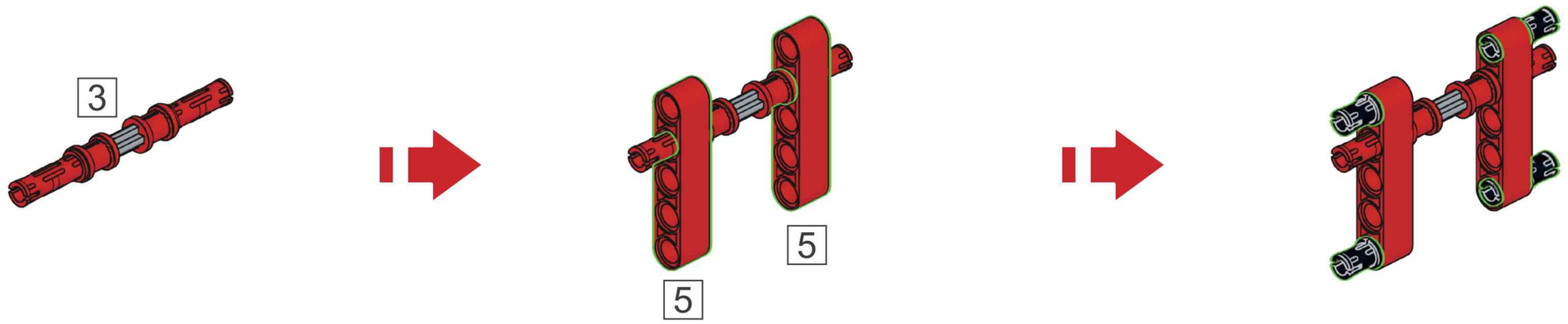

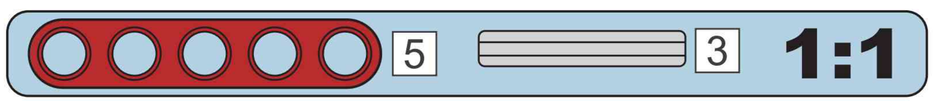

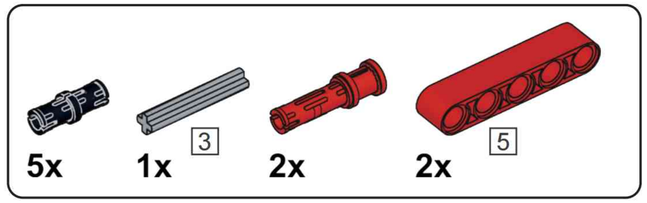

010

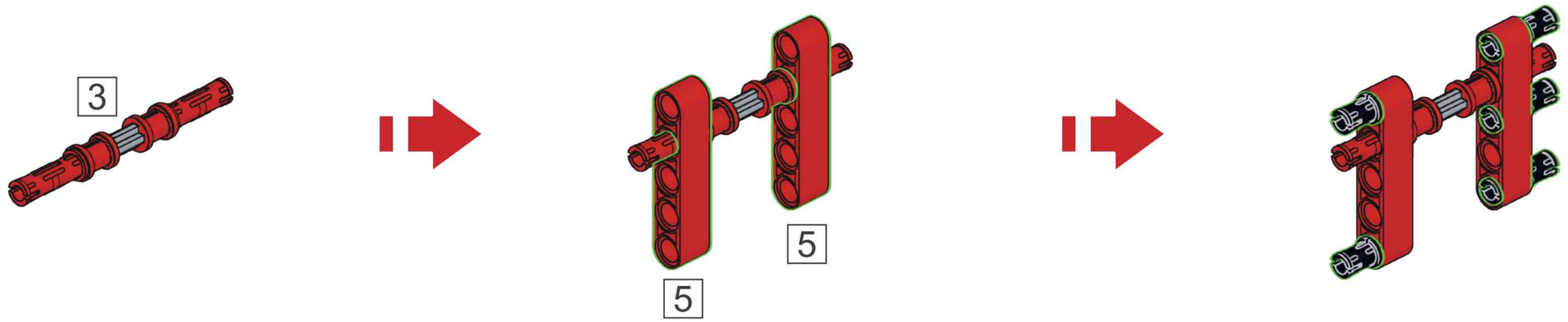

O11

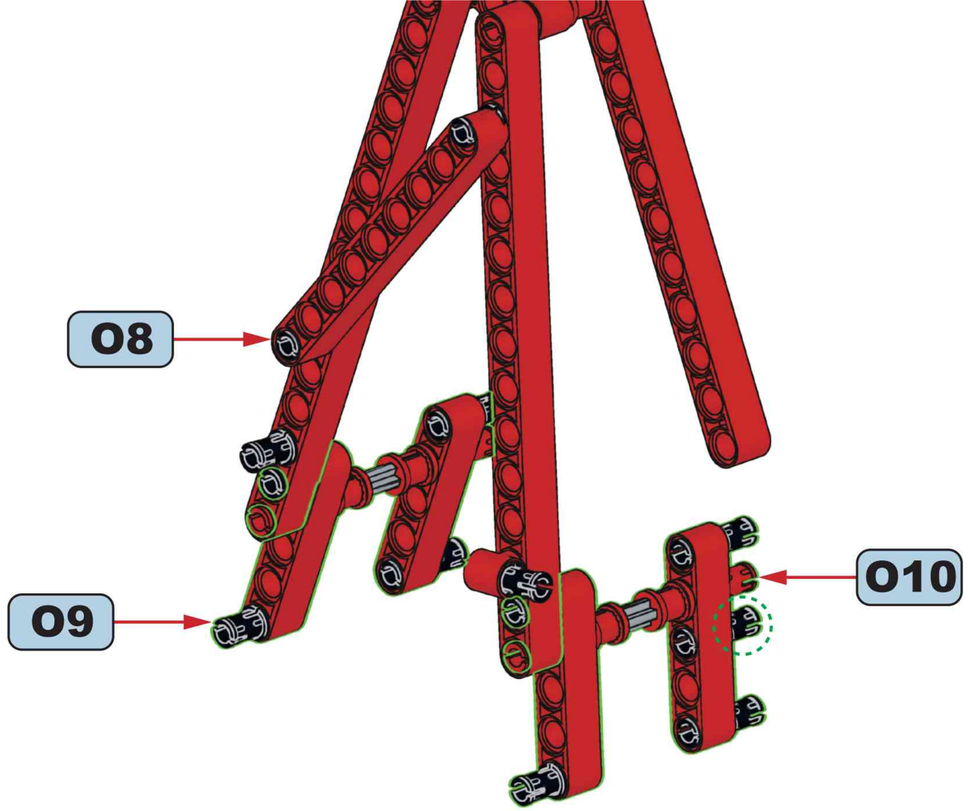

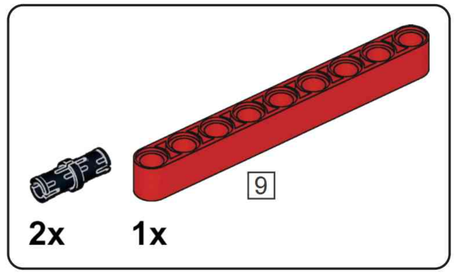

O12

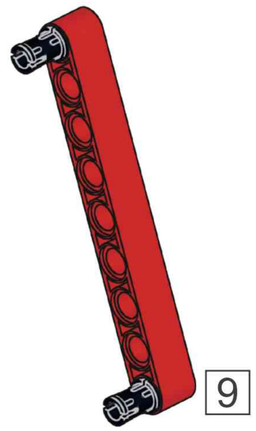

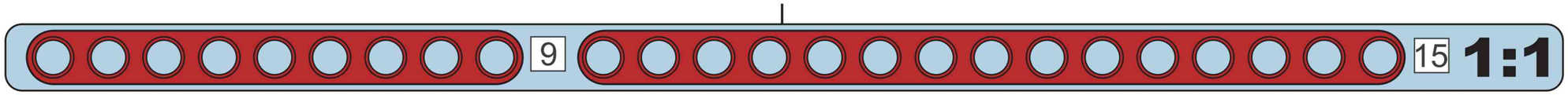

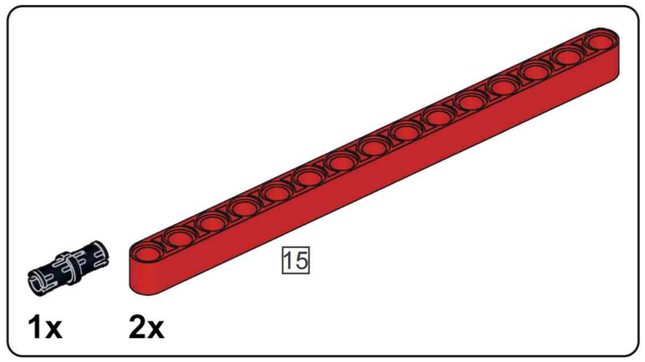

O13

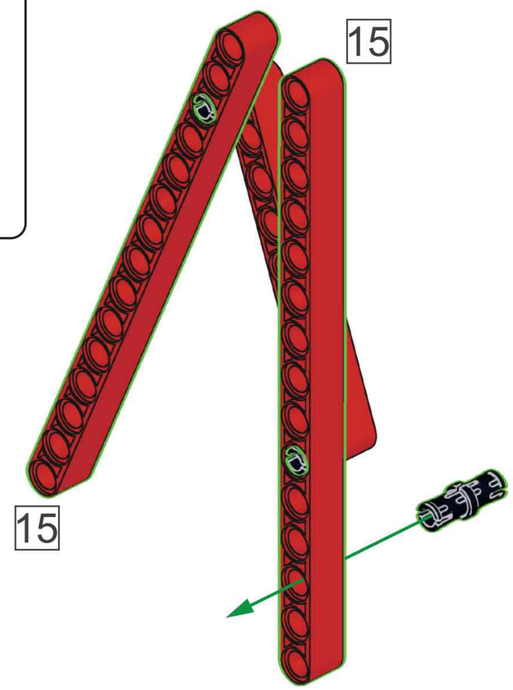

O14

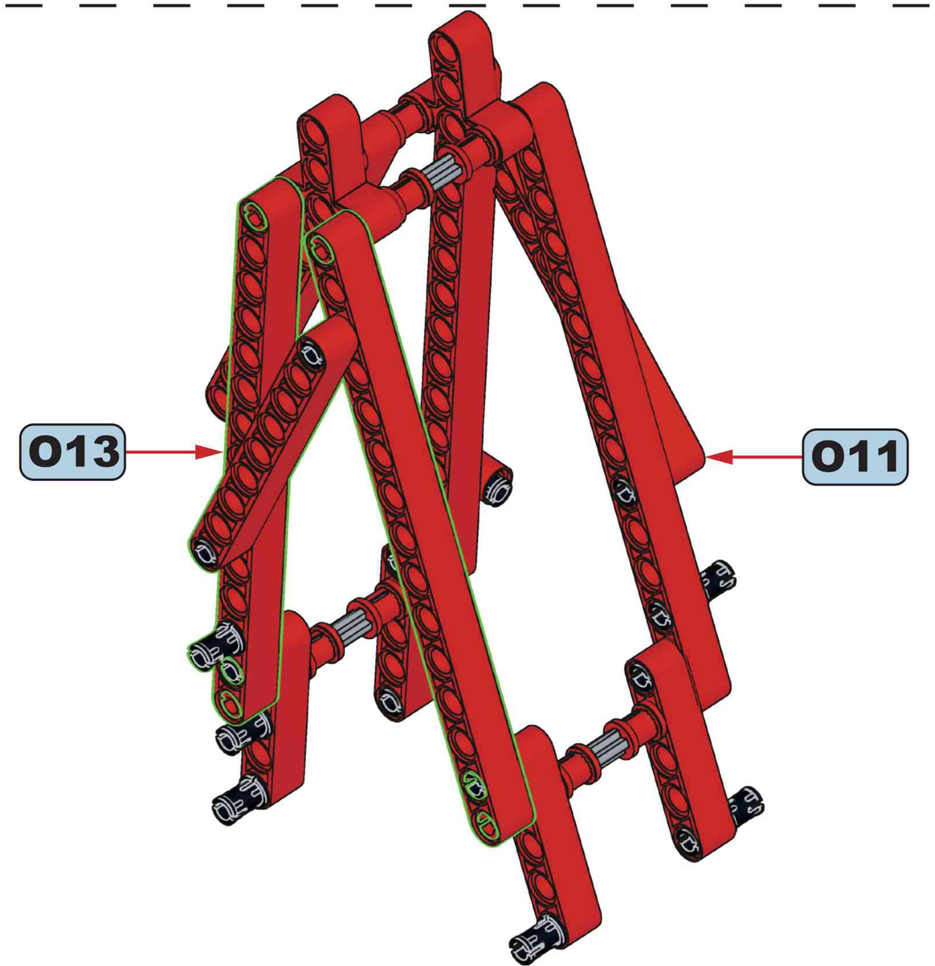

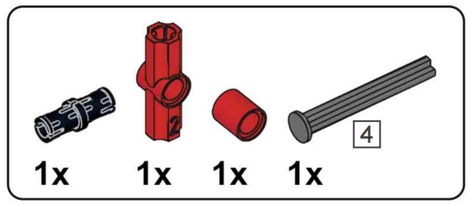

015

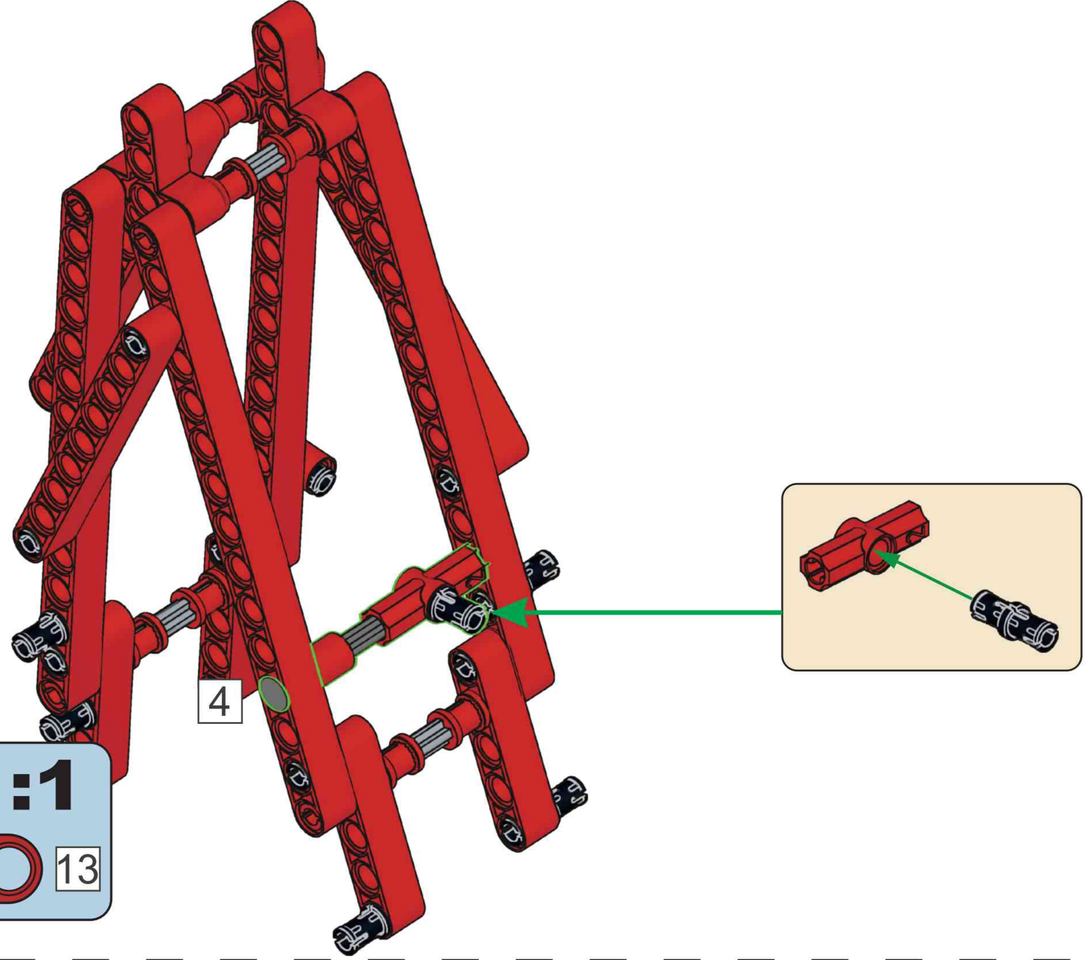

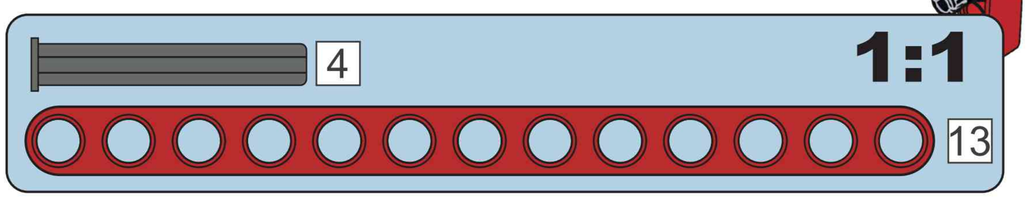

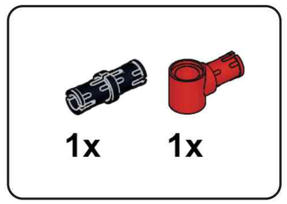

016

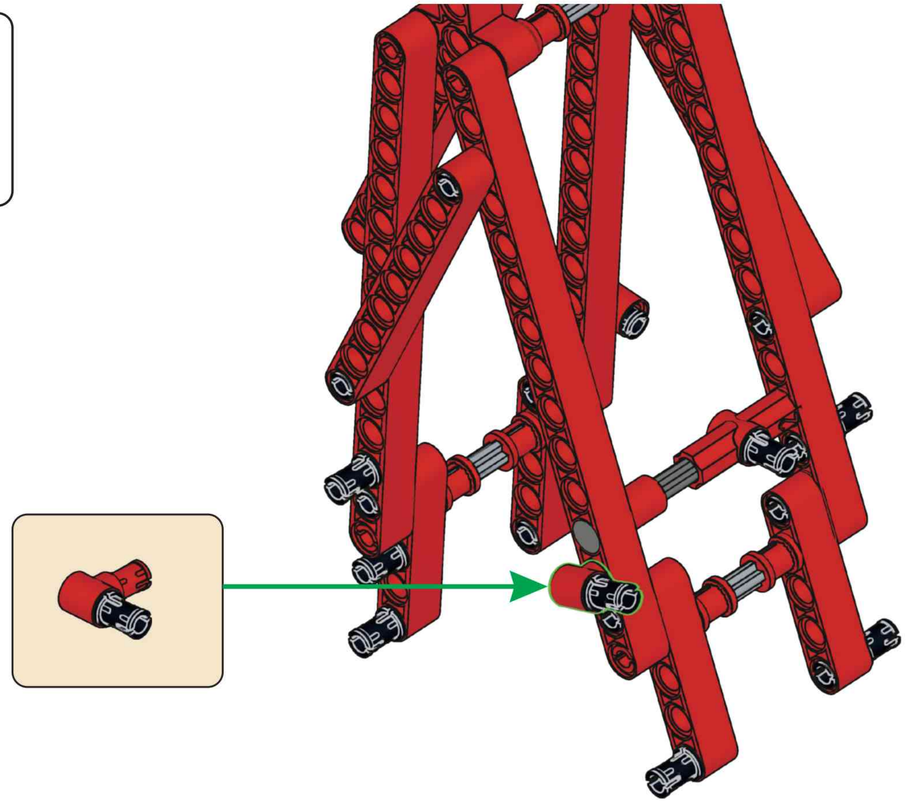

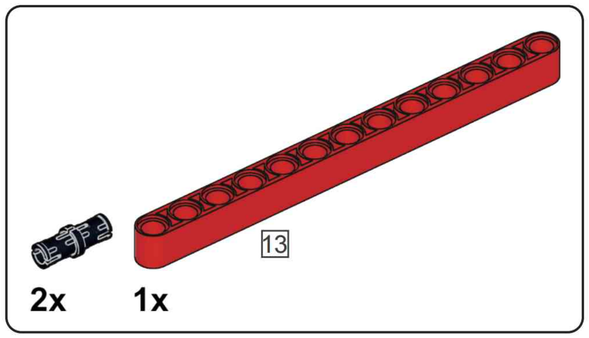

017

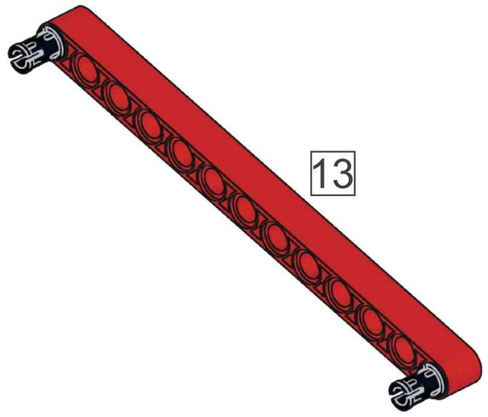

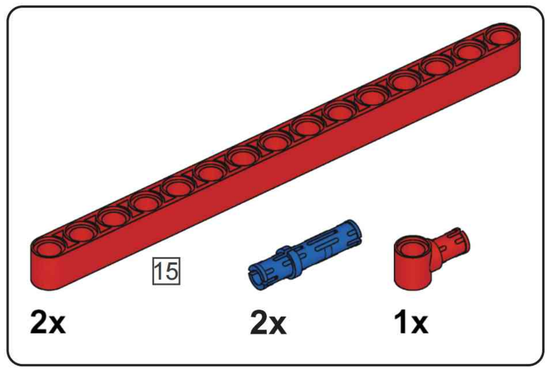

O18

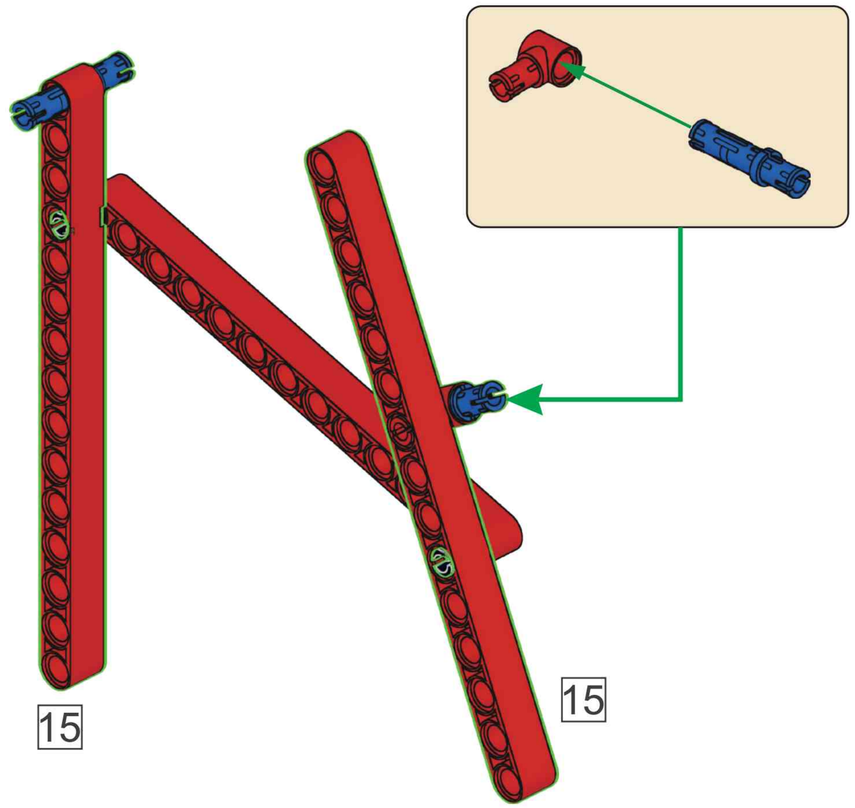

O19

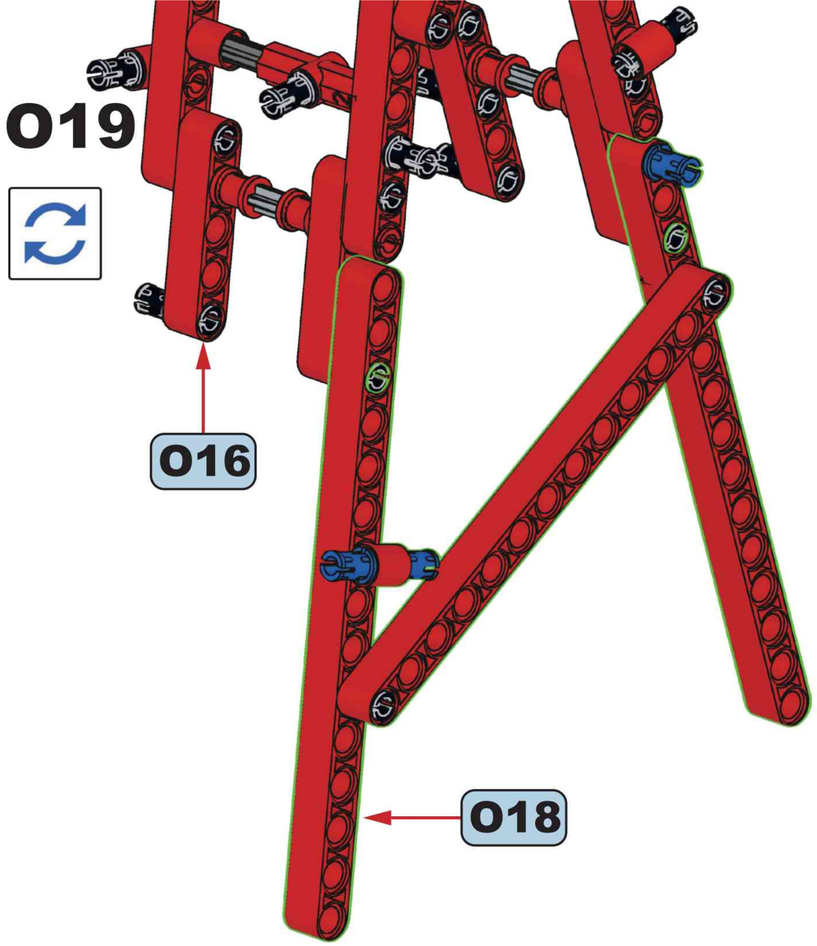

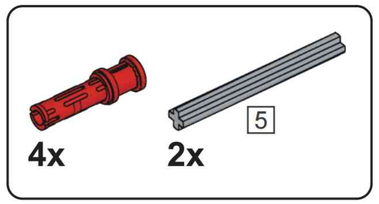

O20

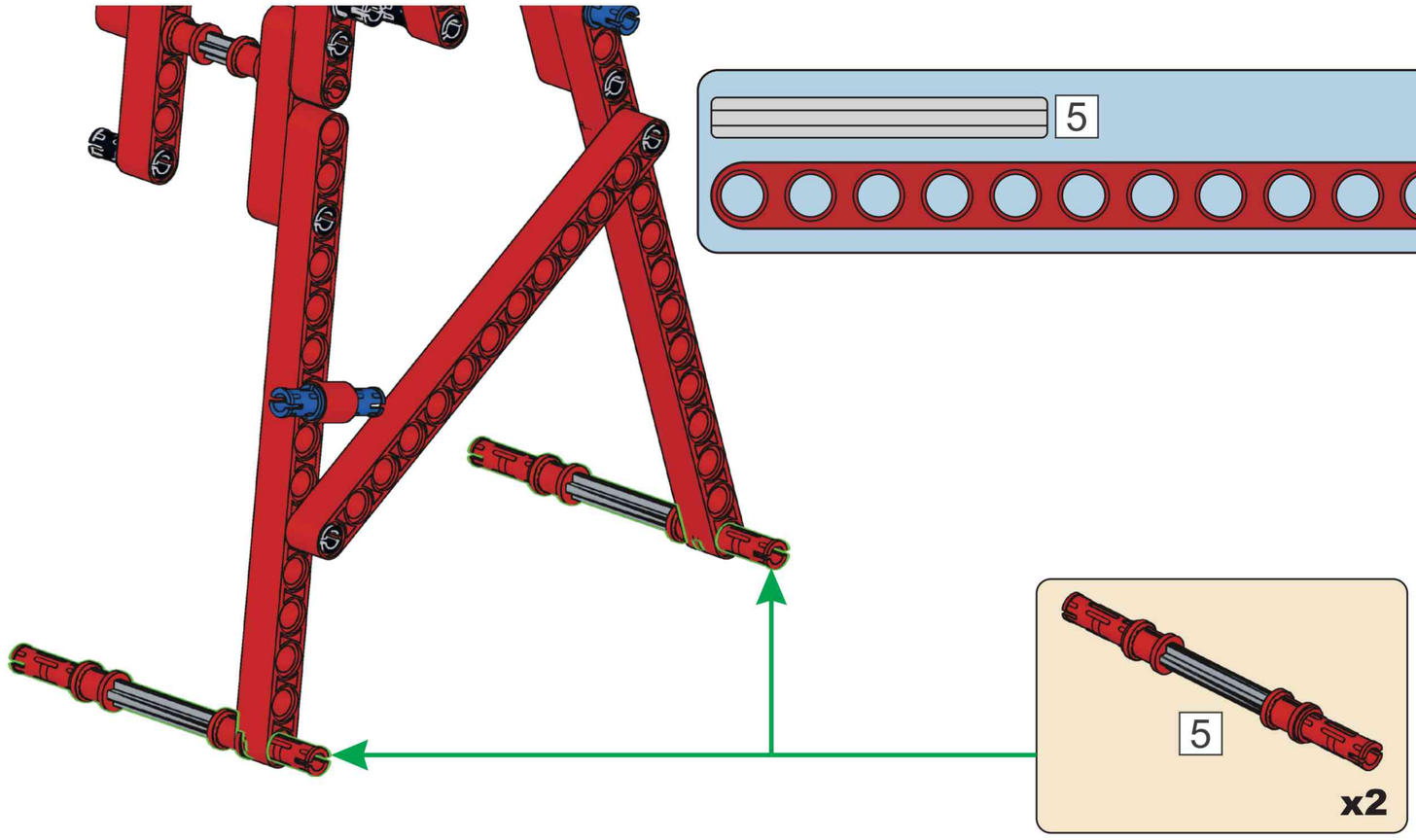

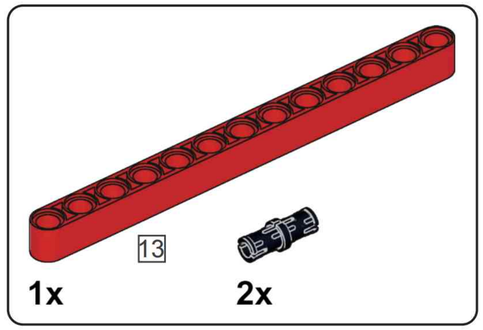

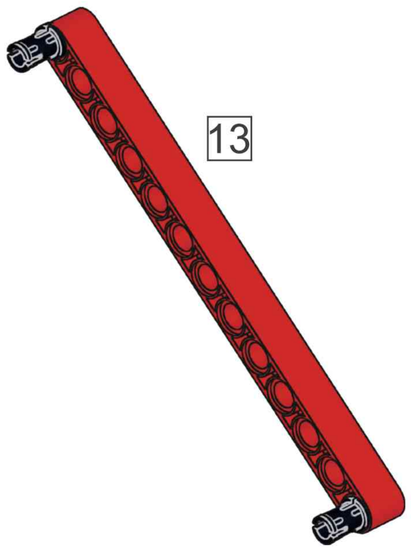

O21

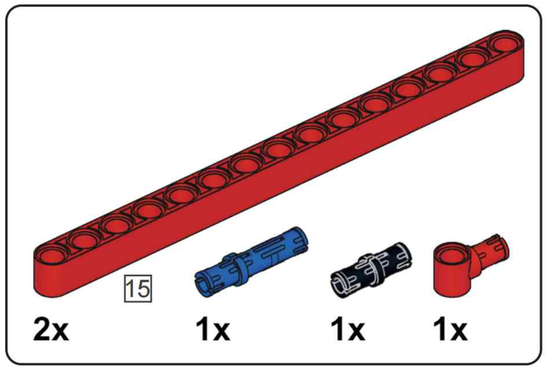

O22

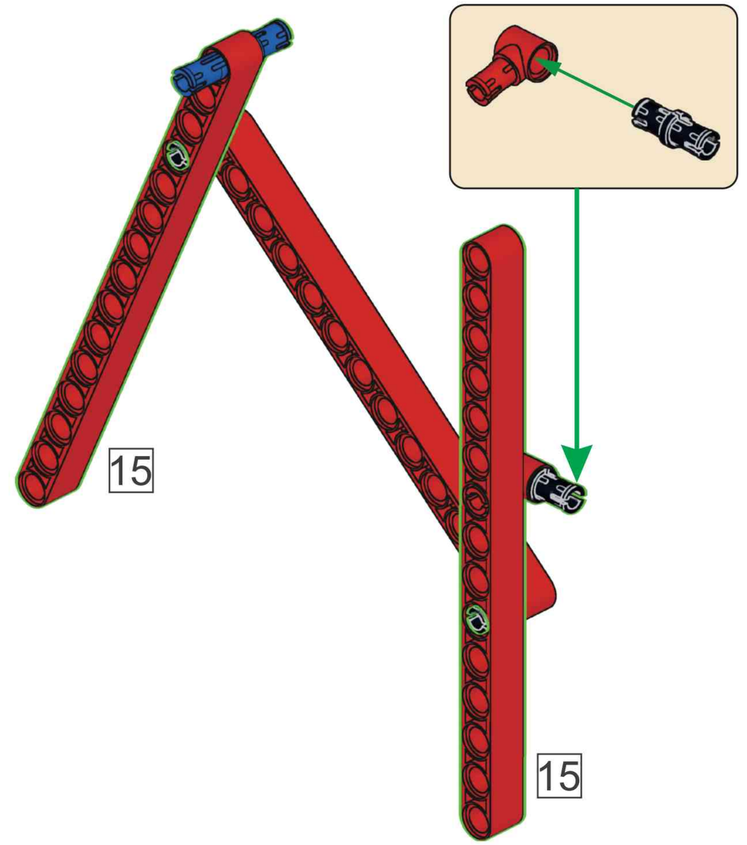

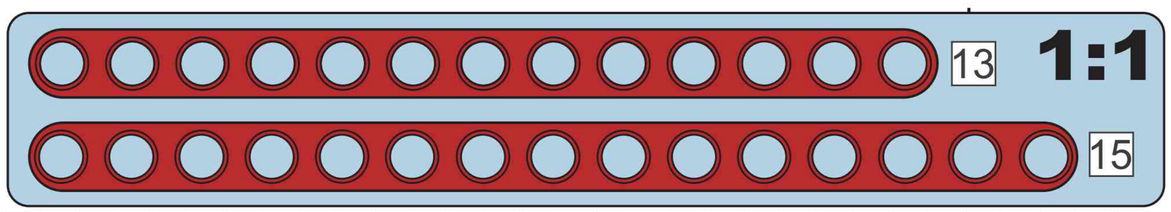

O23



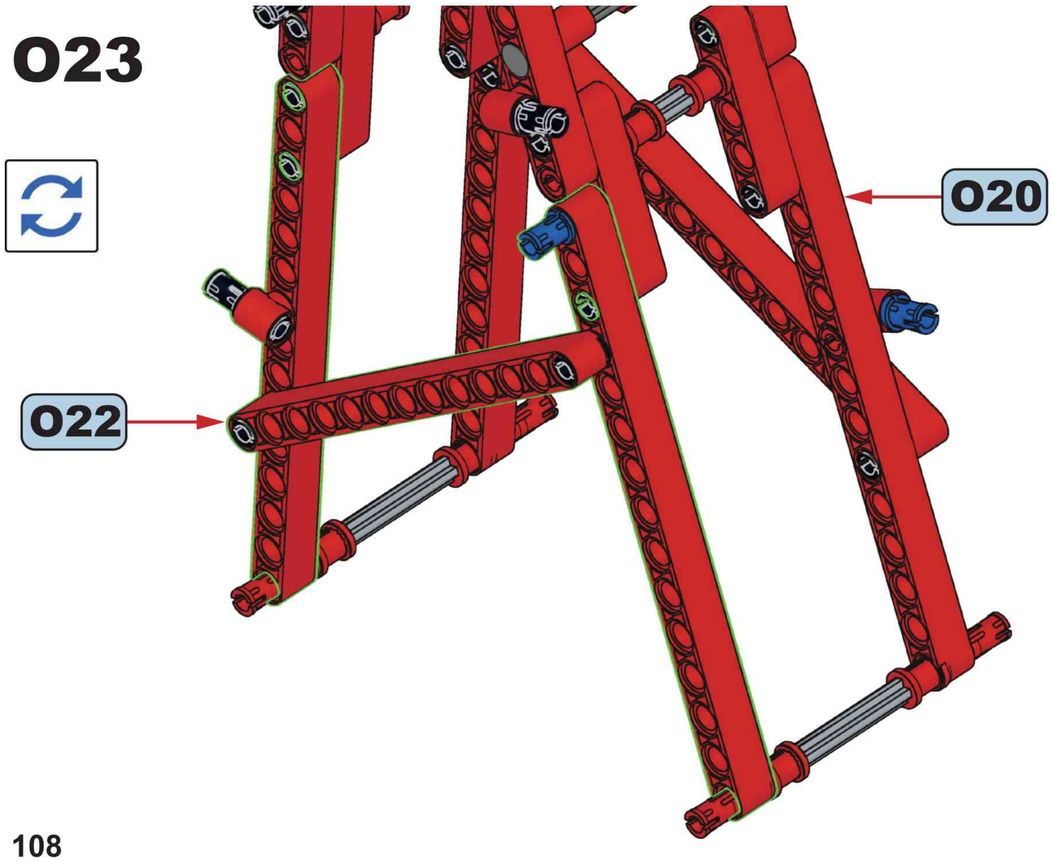

O24

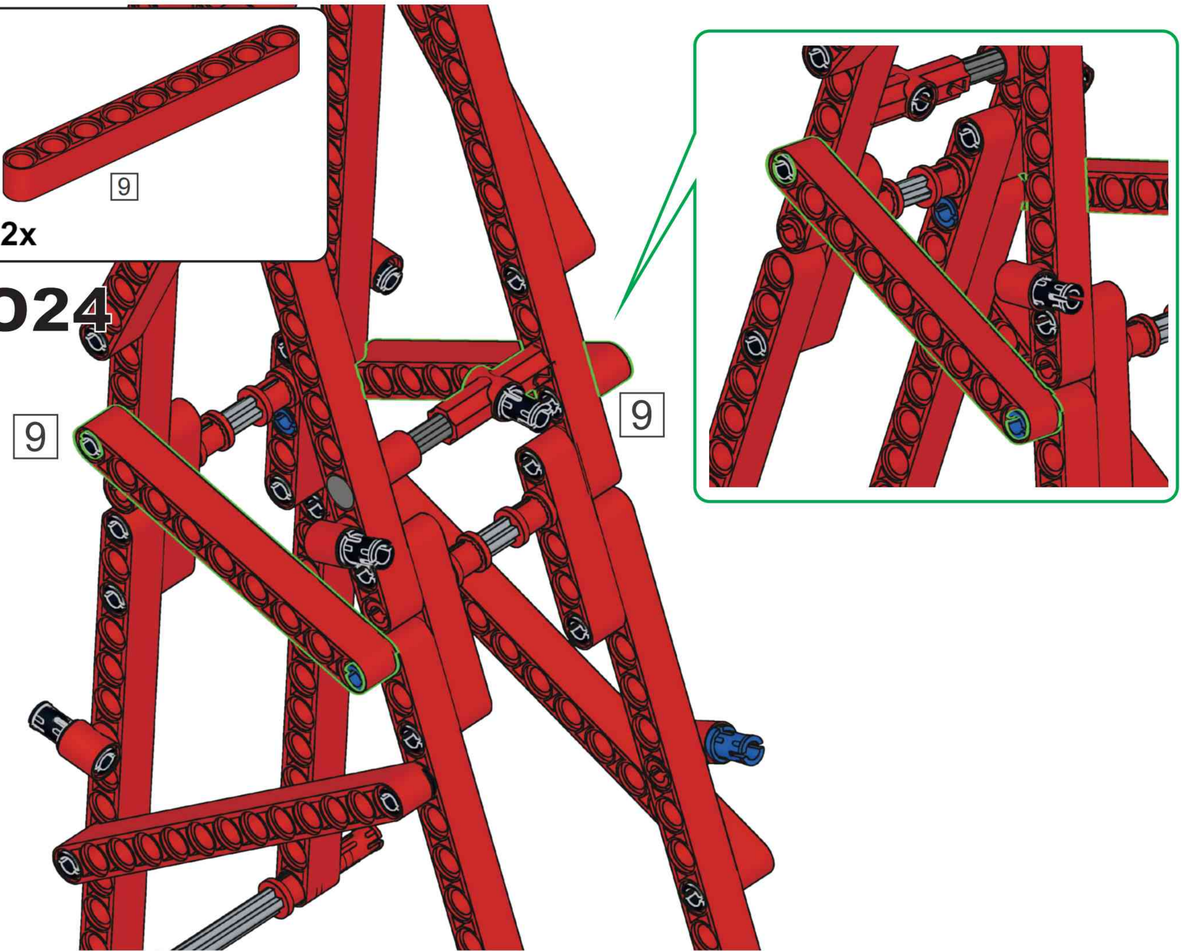

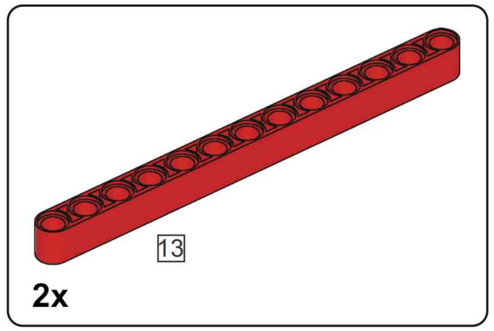

025

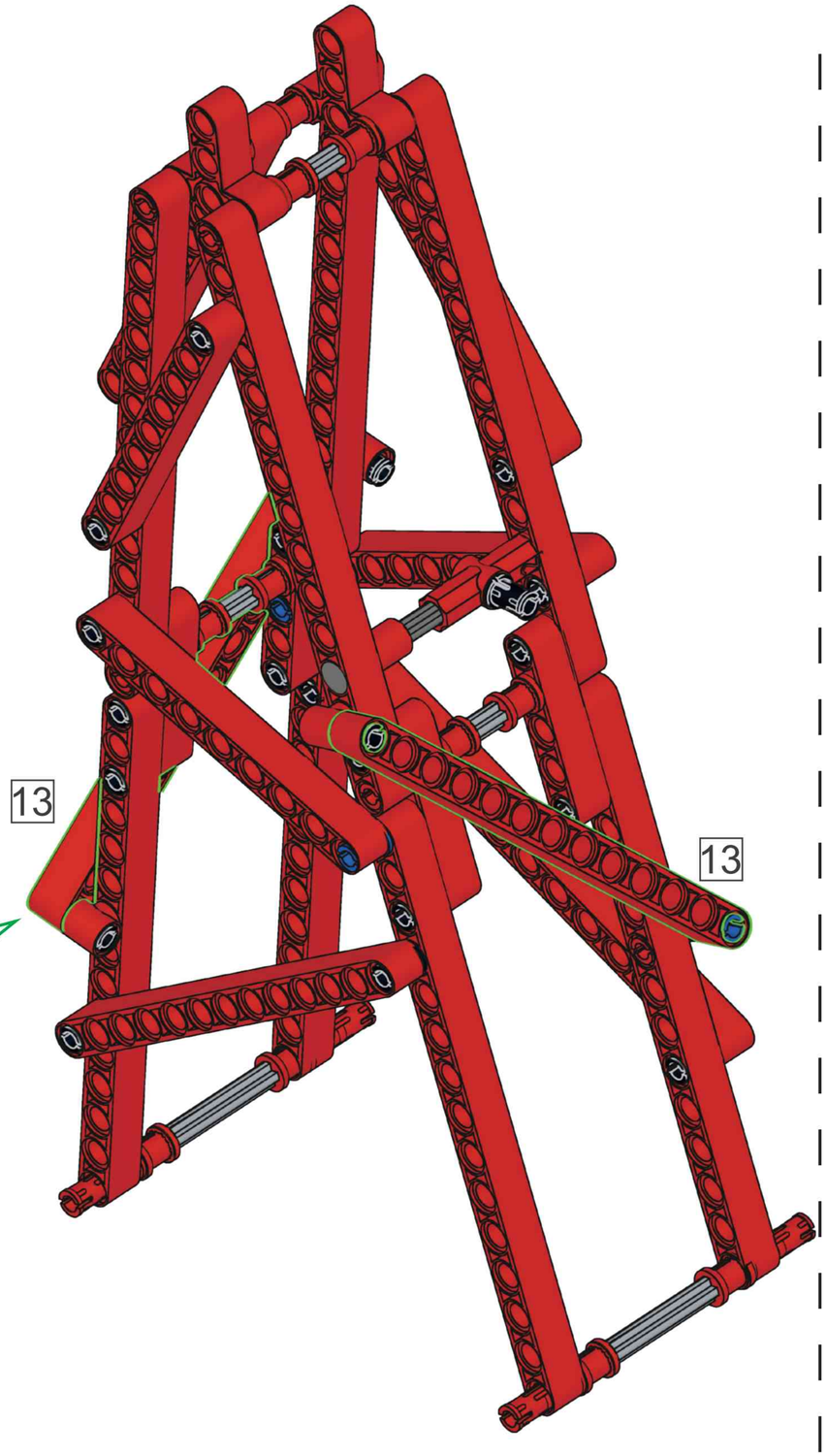

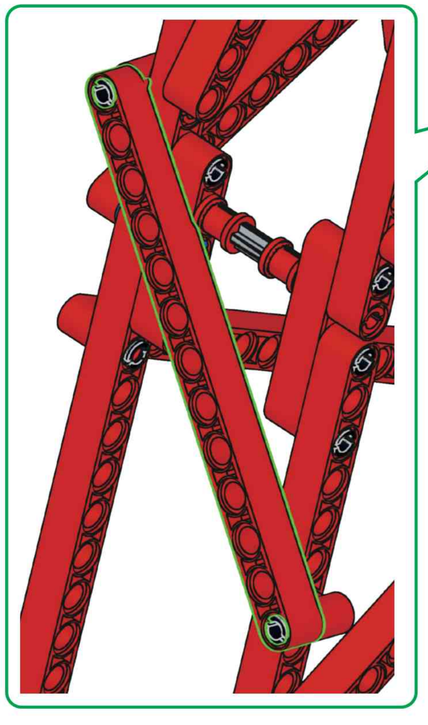

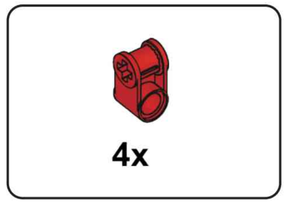

026



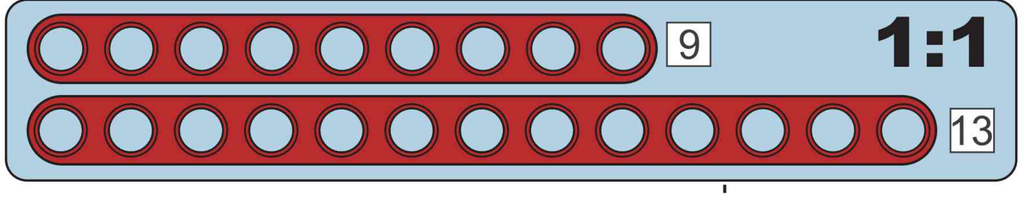

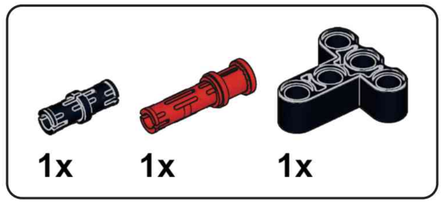

027



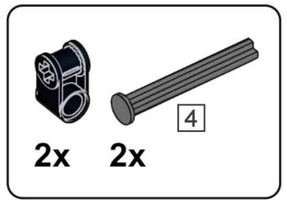

028

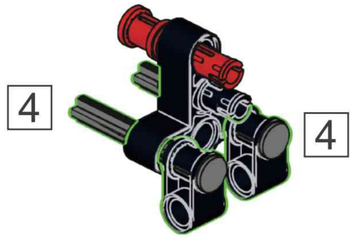

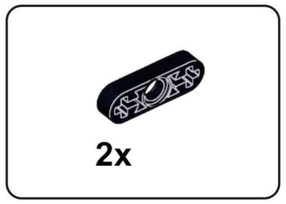

029

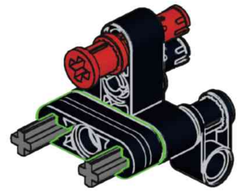

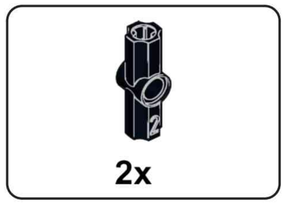

030

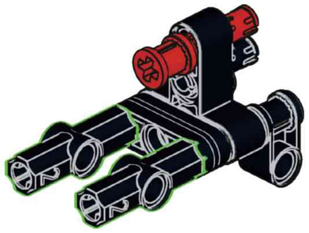

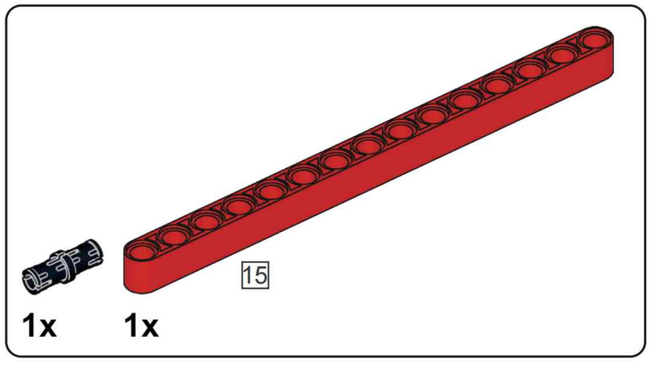

031

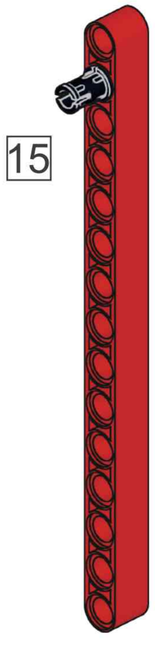

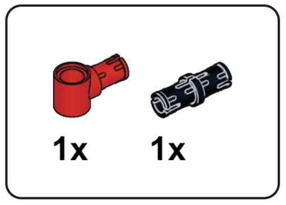

032

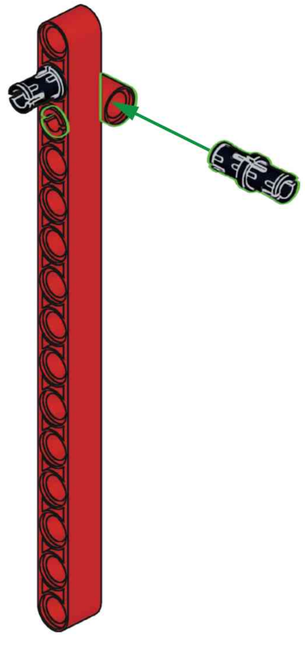

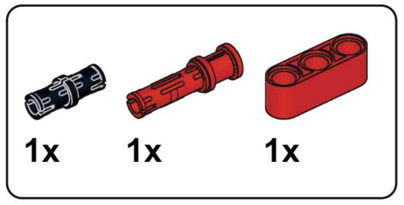

033

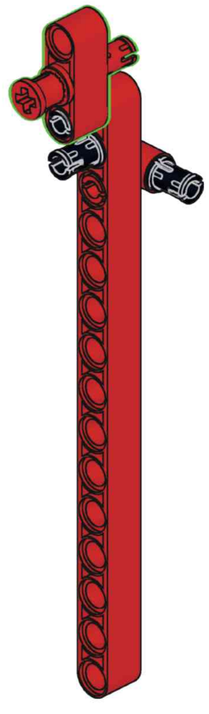

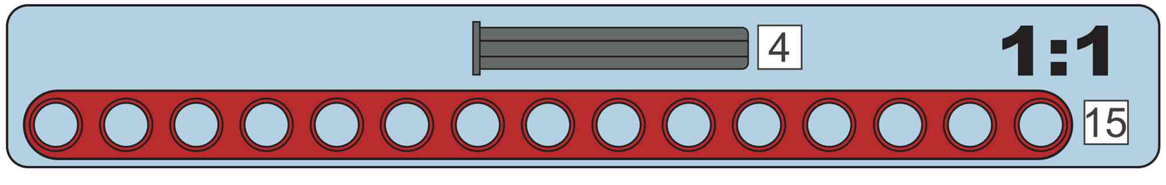

034

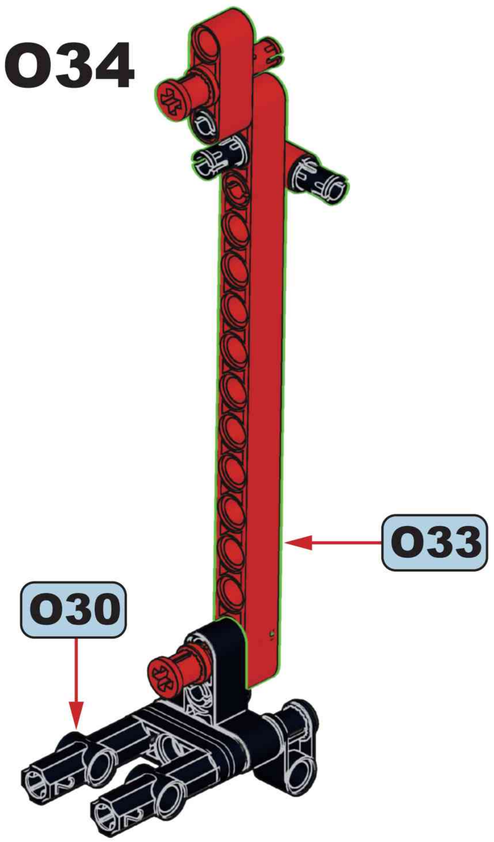

035

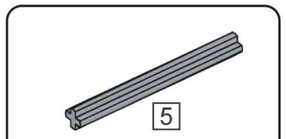

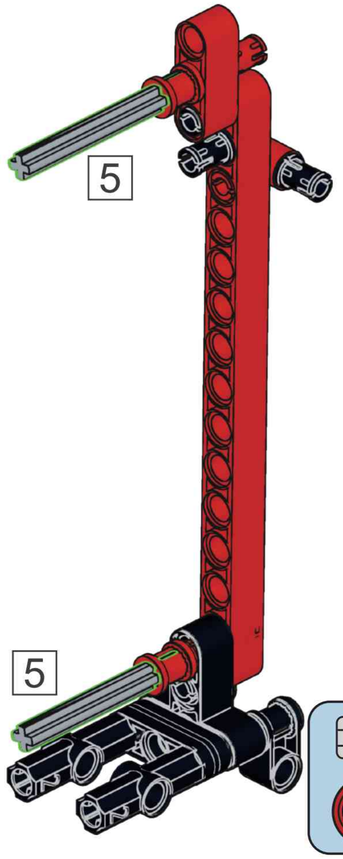

036

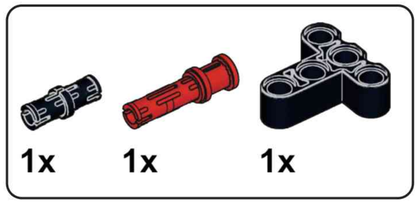



037

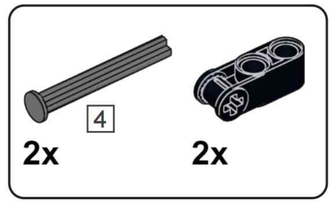

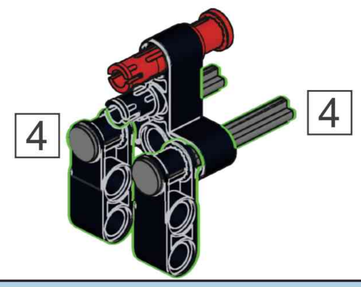

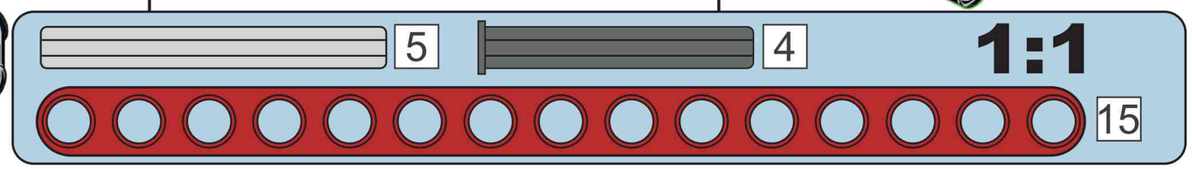

038

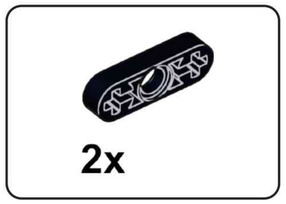

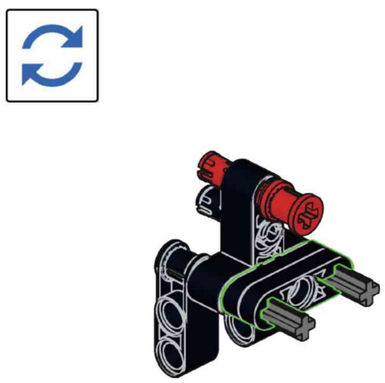

039

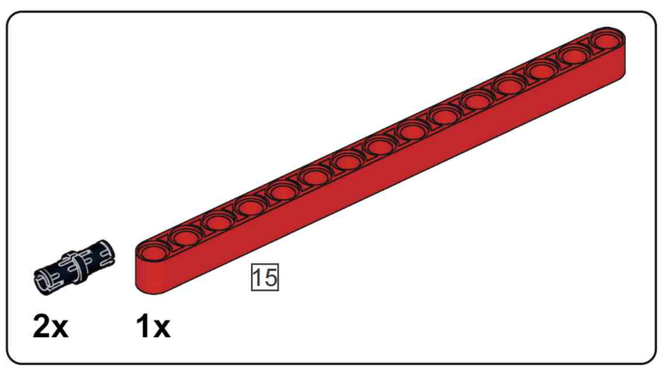

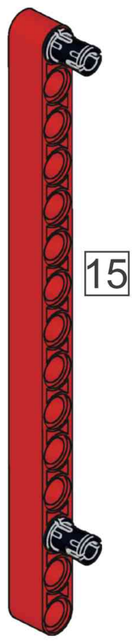

040

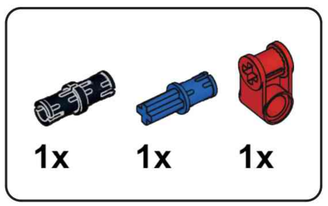

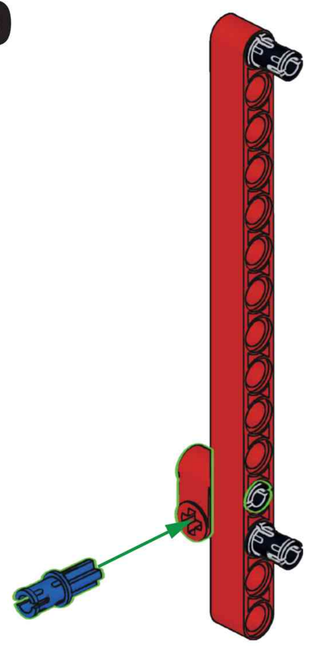

041

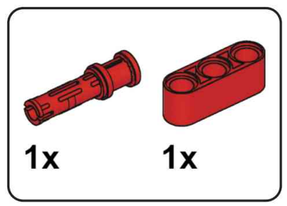

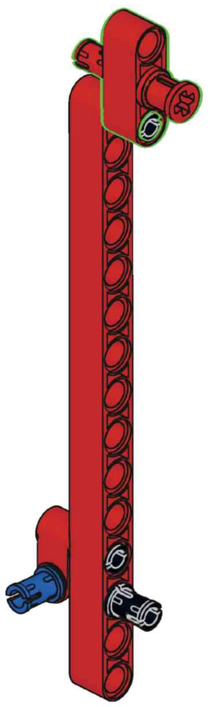

042

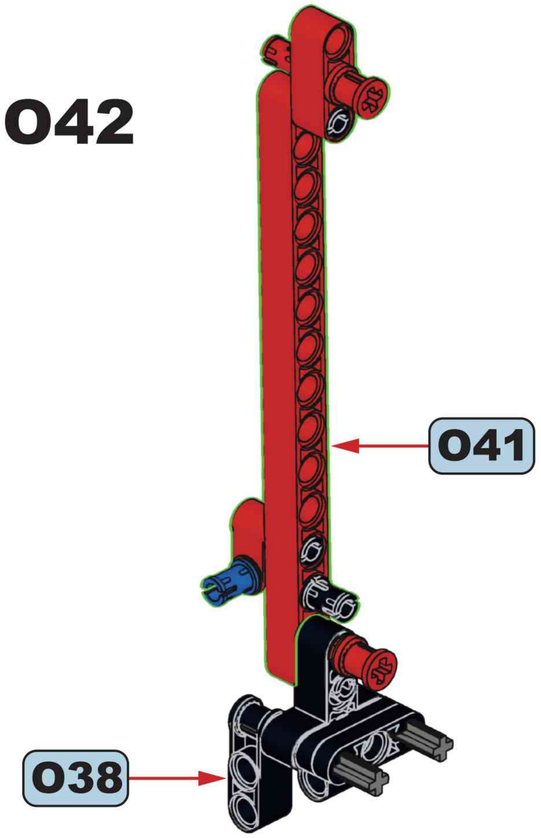

043

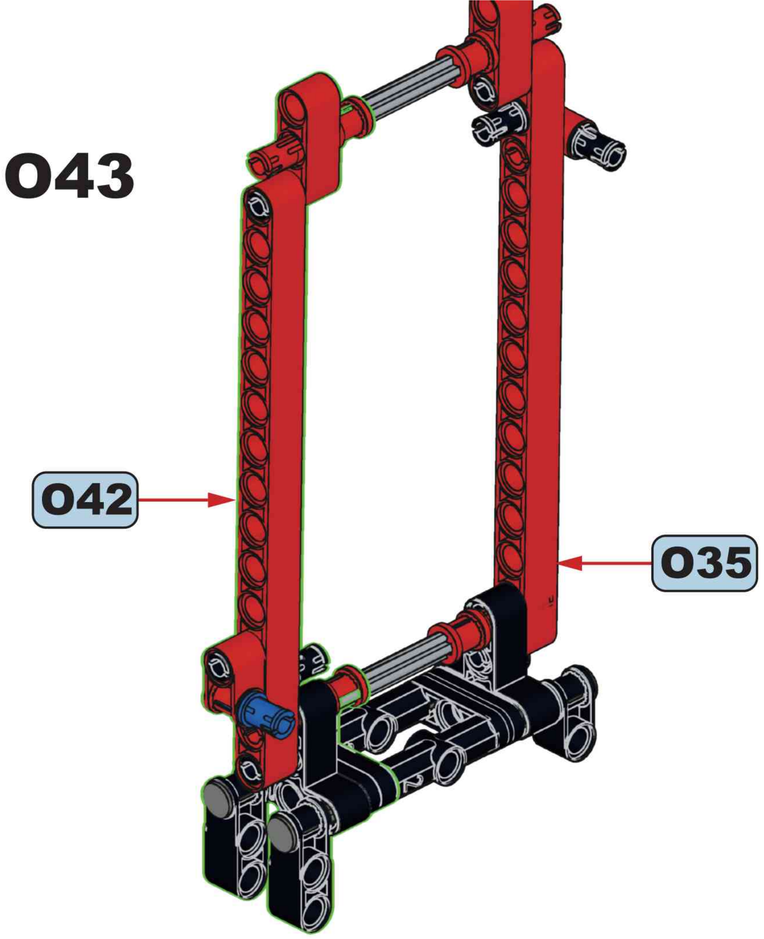

044

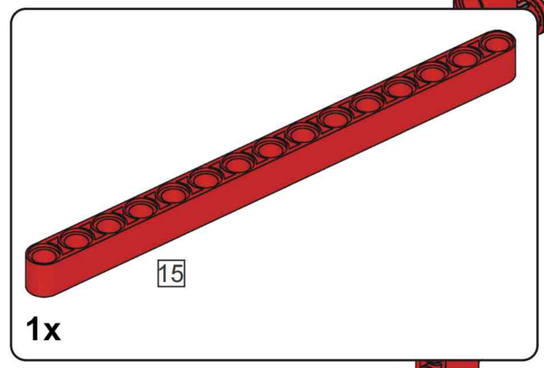

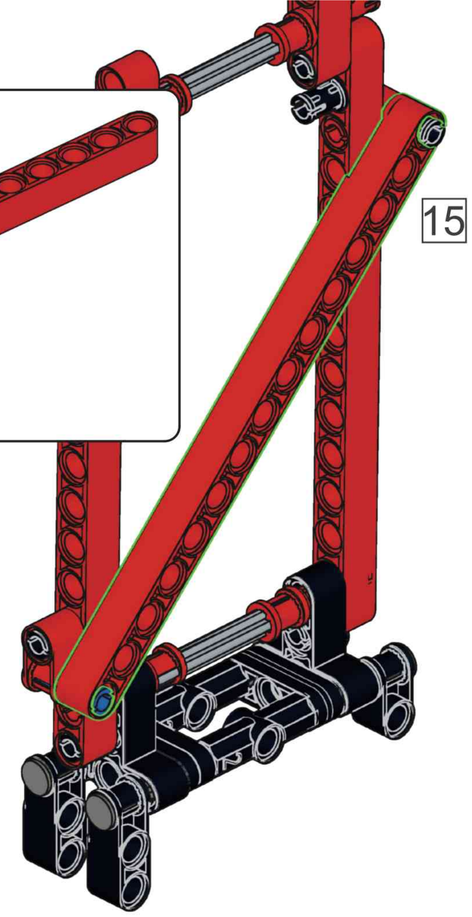

045

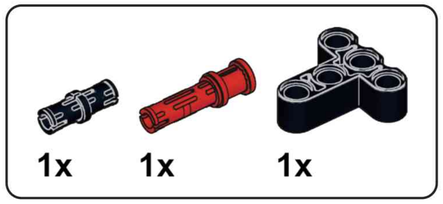



046

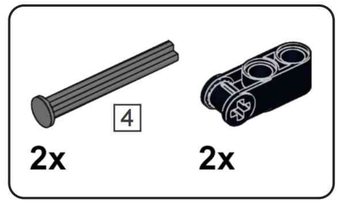

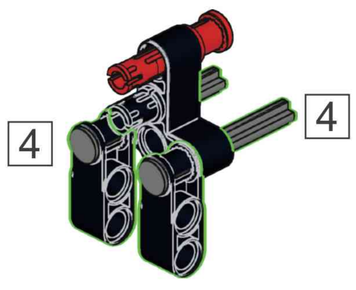

047

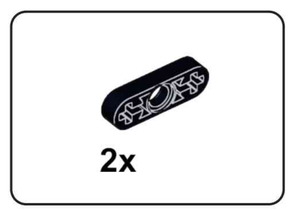

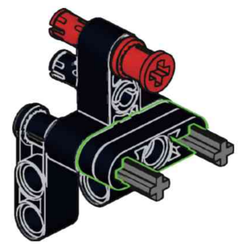

048

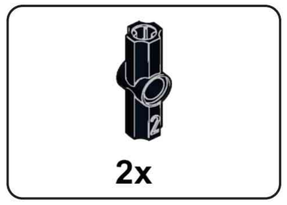

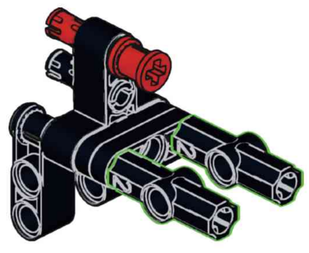

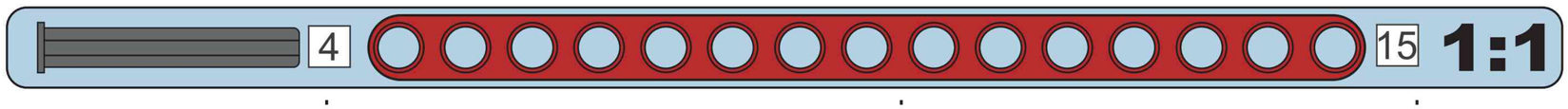

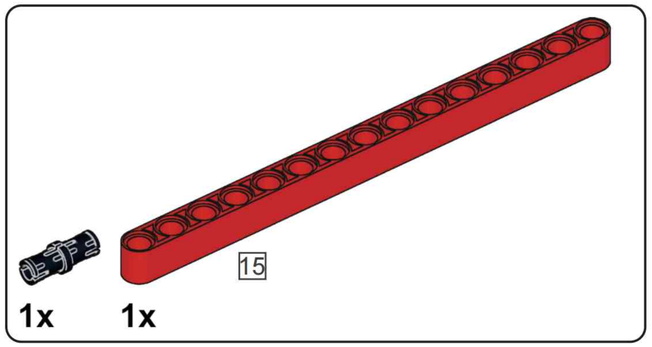

049

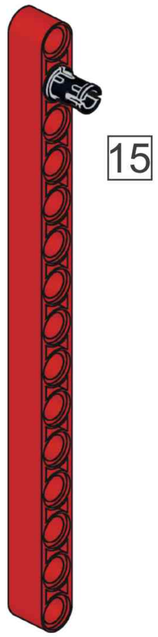

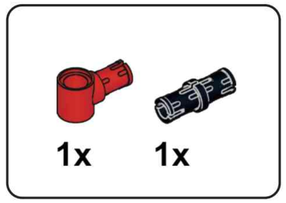

050

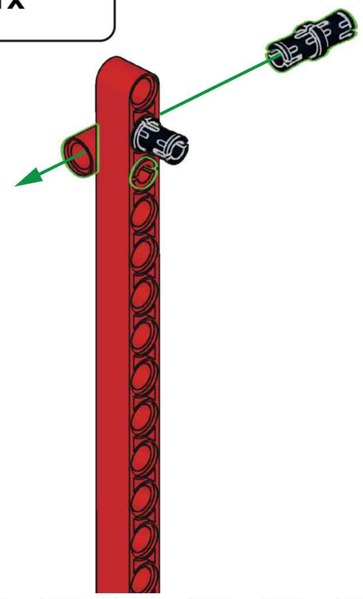

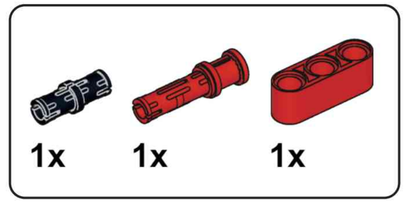

051

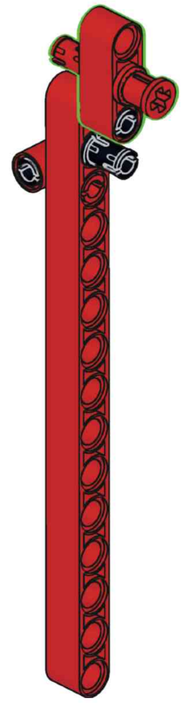

052

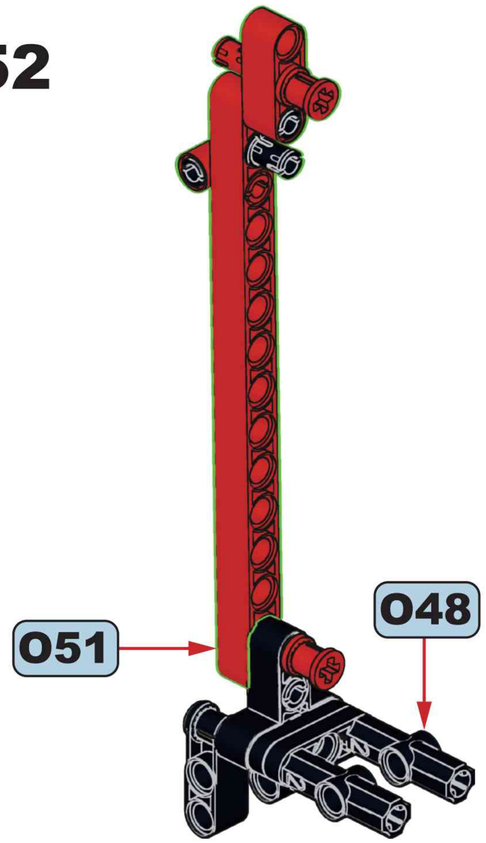

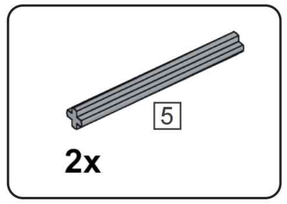

053

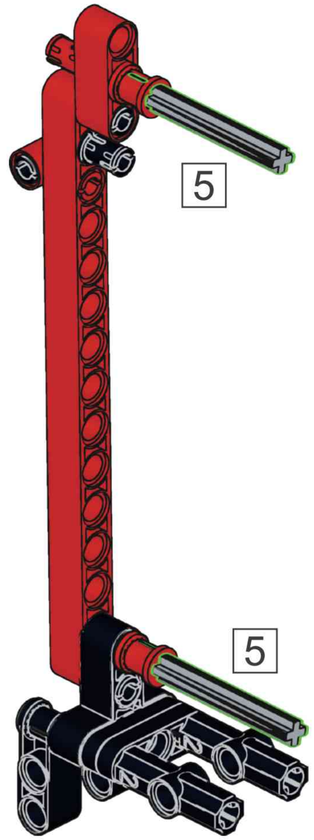

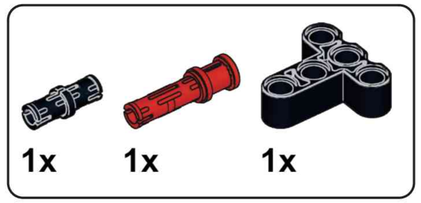

054



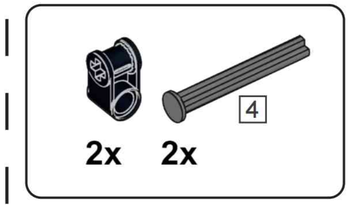

055

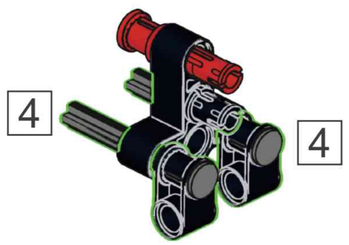

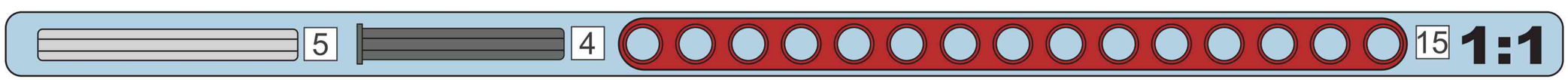

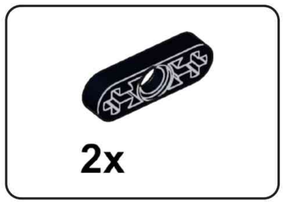

056

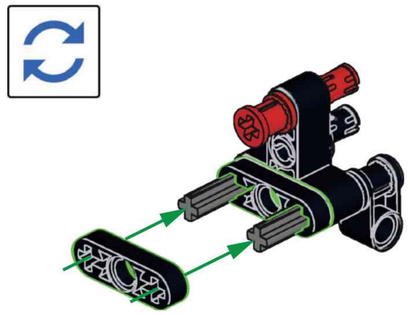

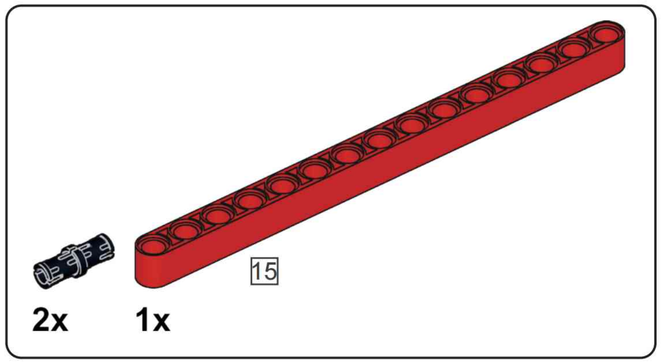

057

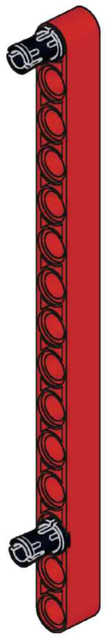

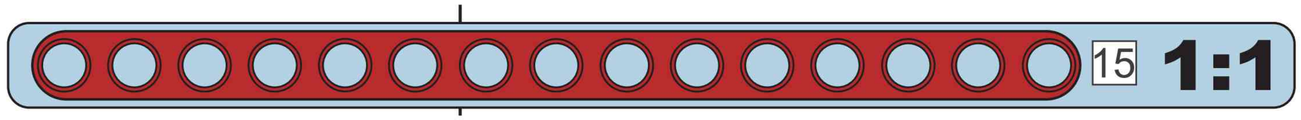

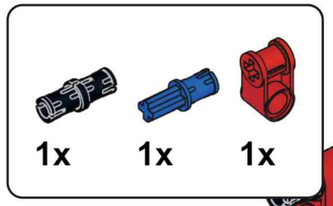

058

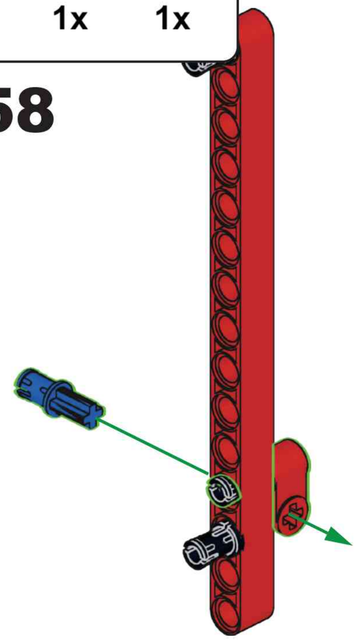

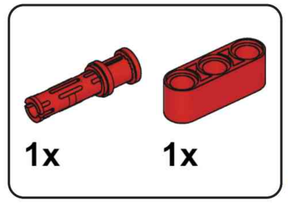

059

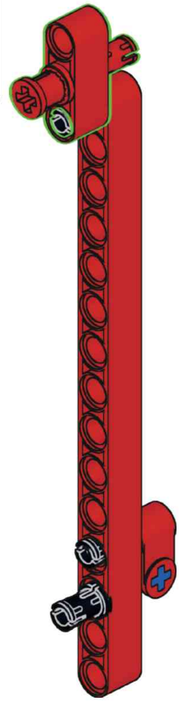

060

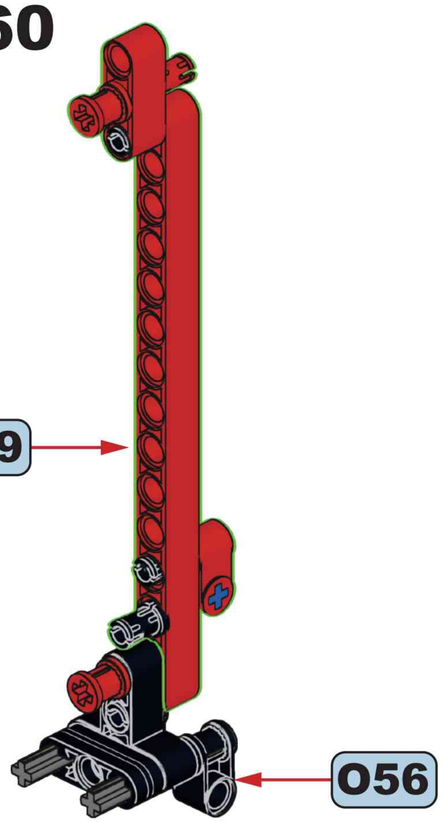

061

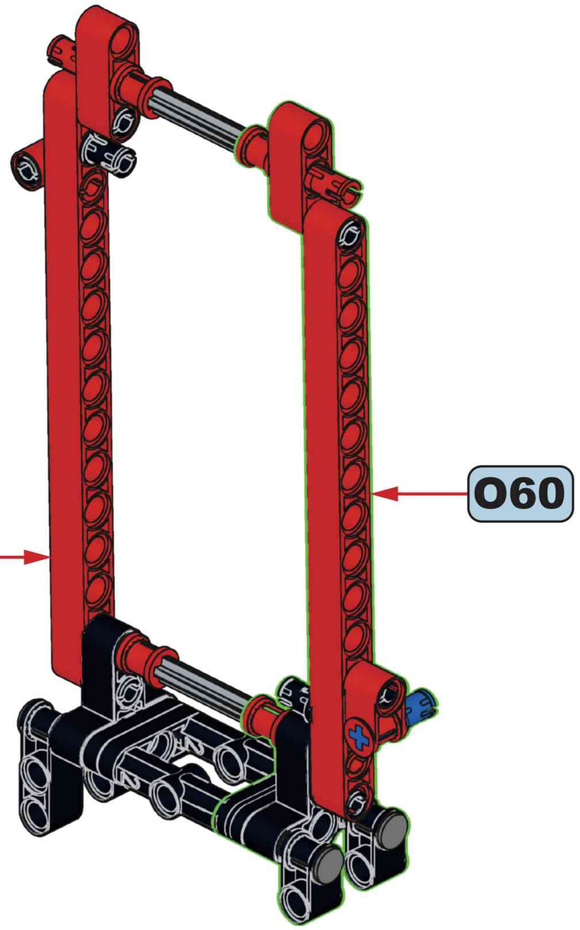

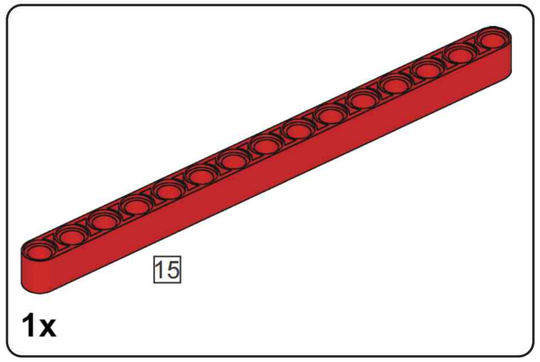

062

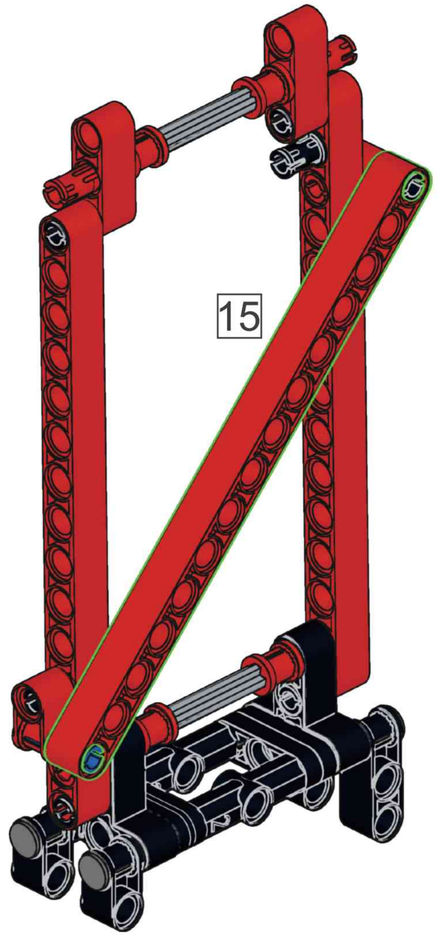

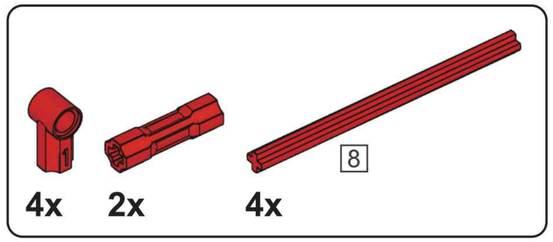

063

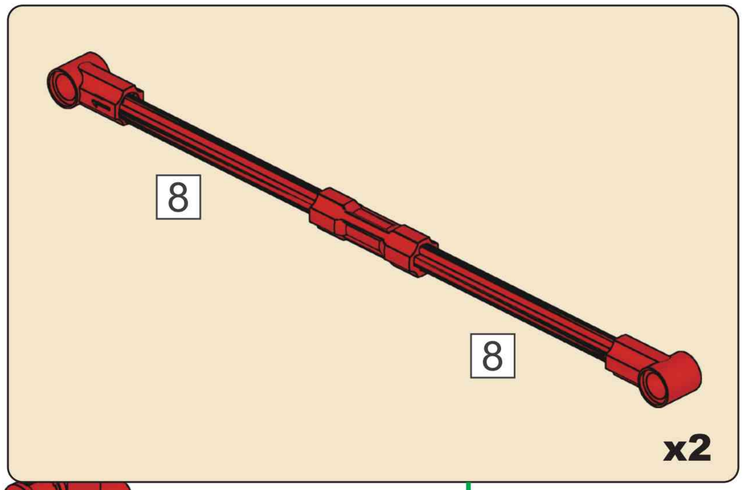

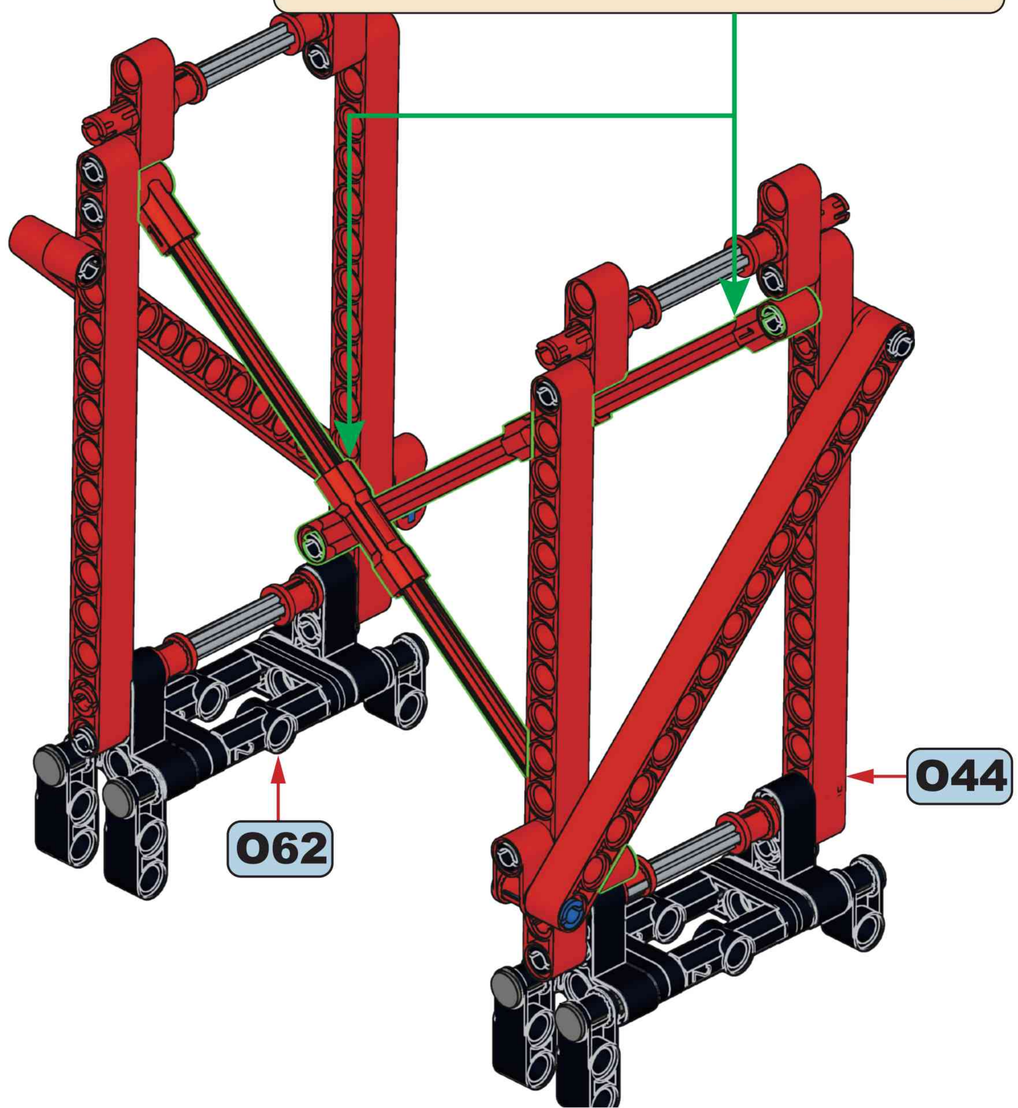

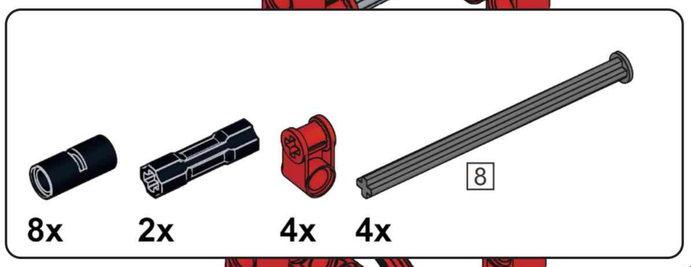

064

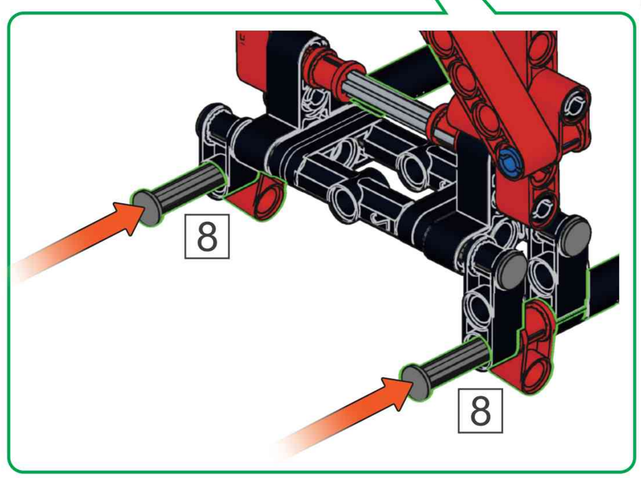

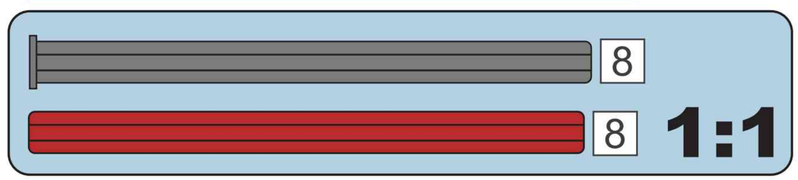

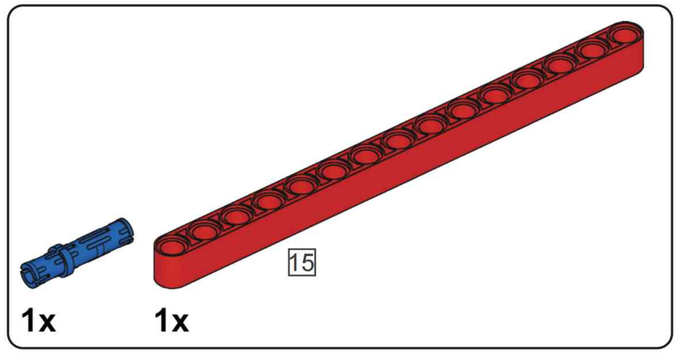

O65

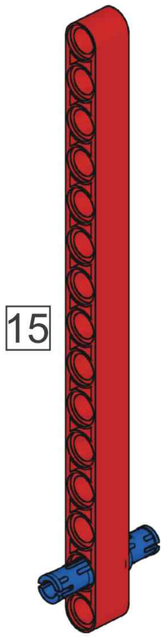

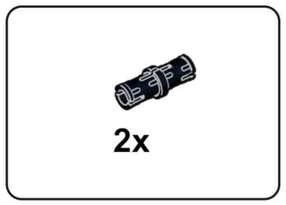

O66

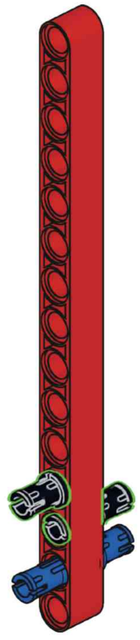

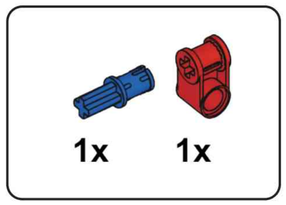

O67

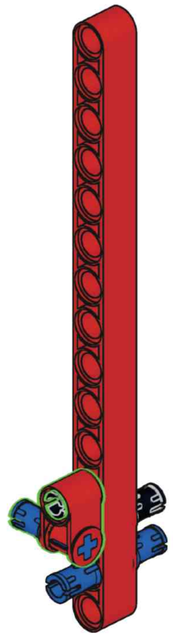

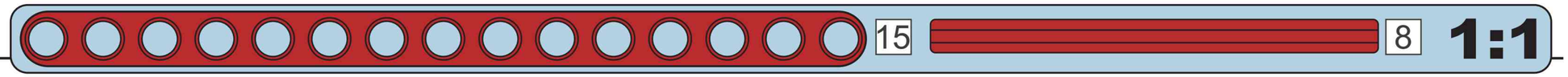

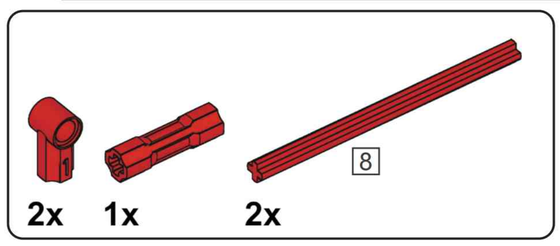

O68

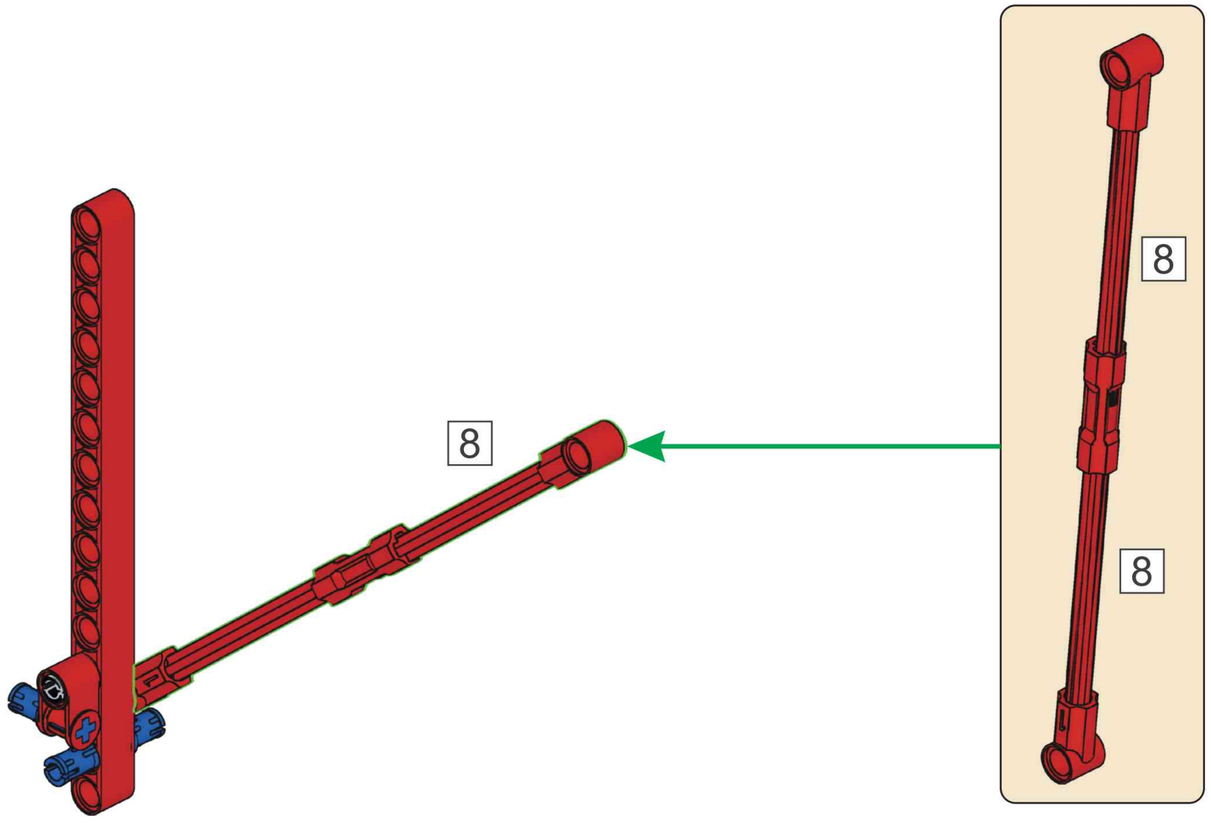

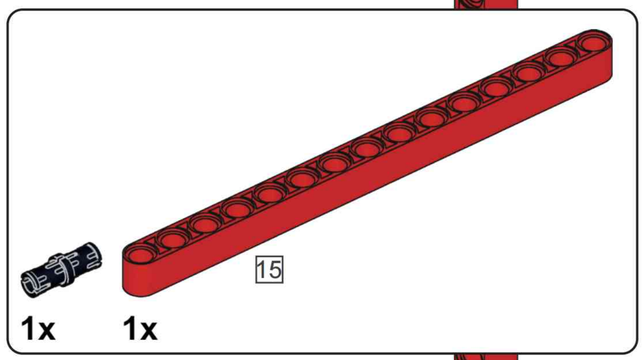

069

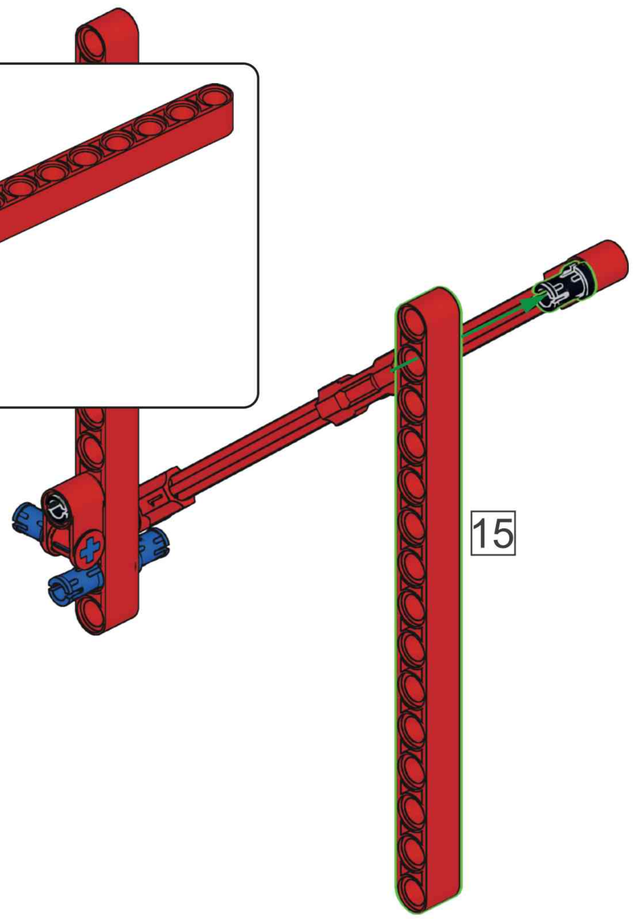

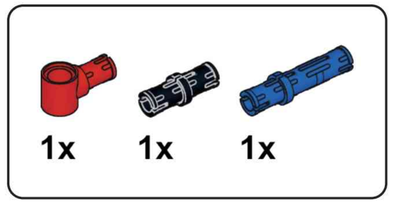

070

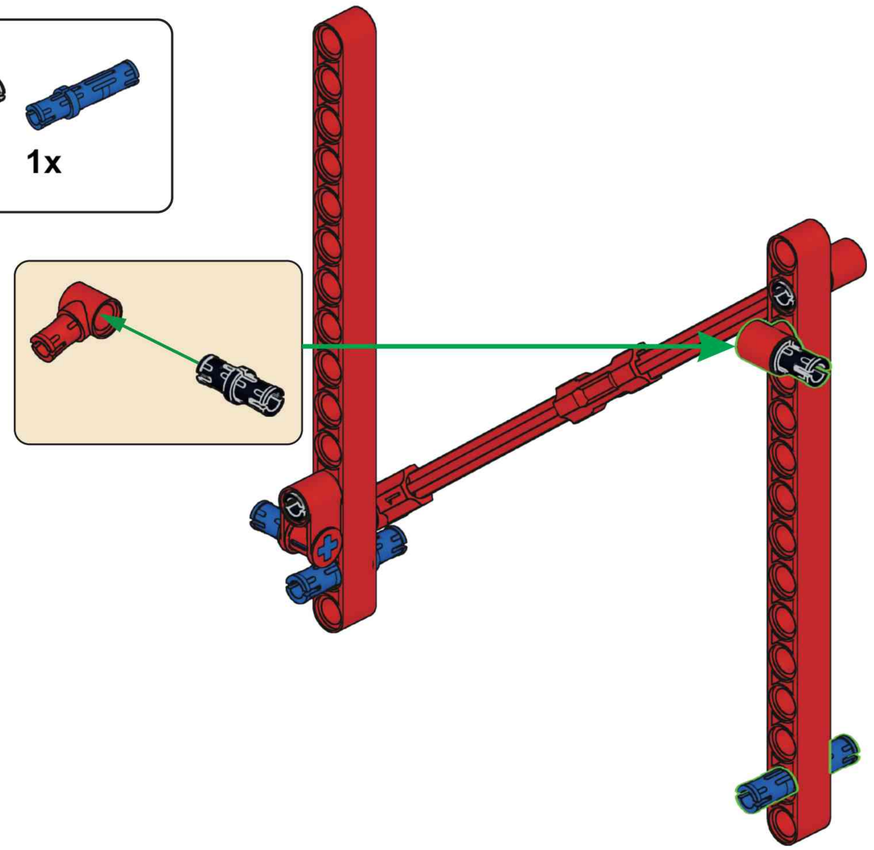

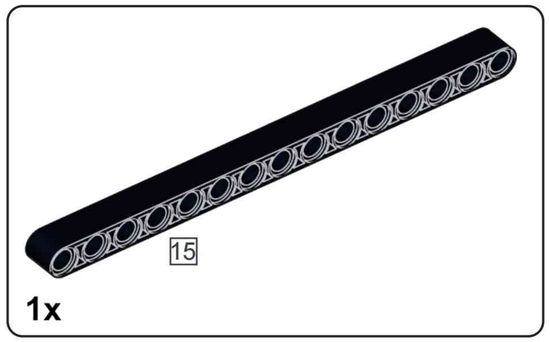

071

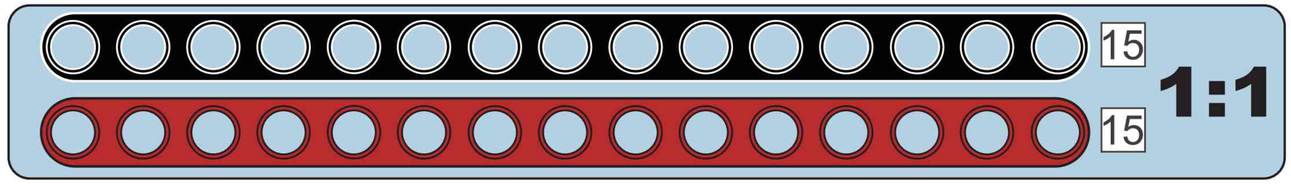

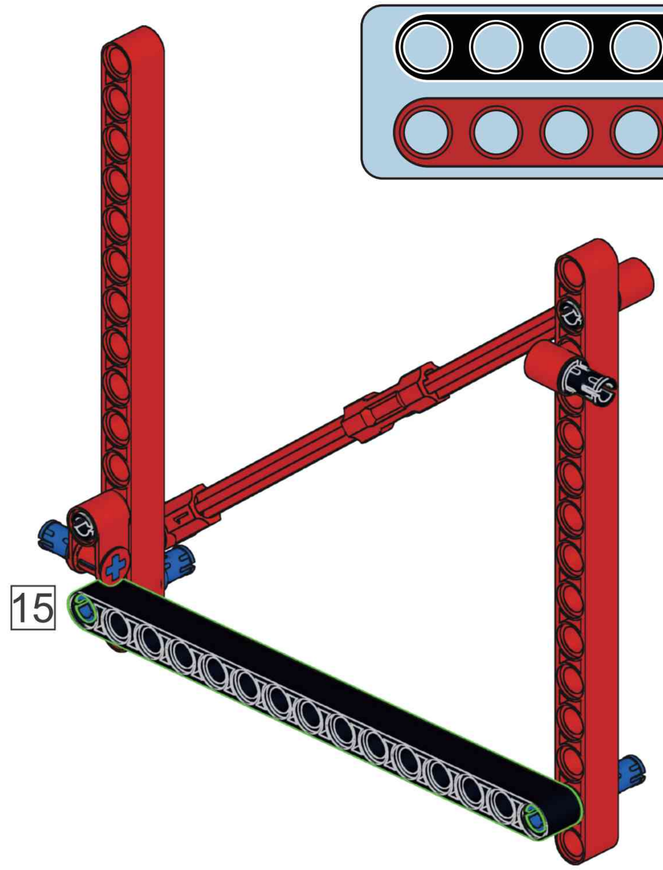

072

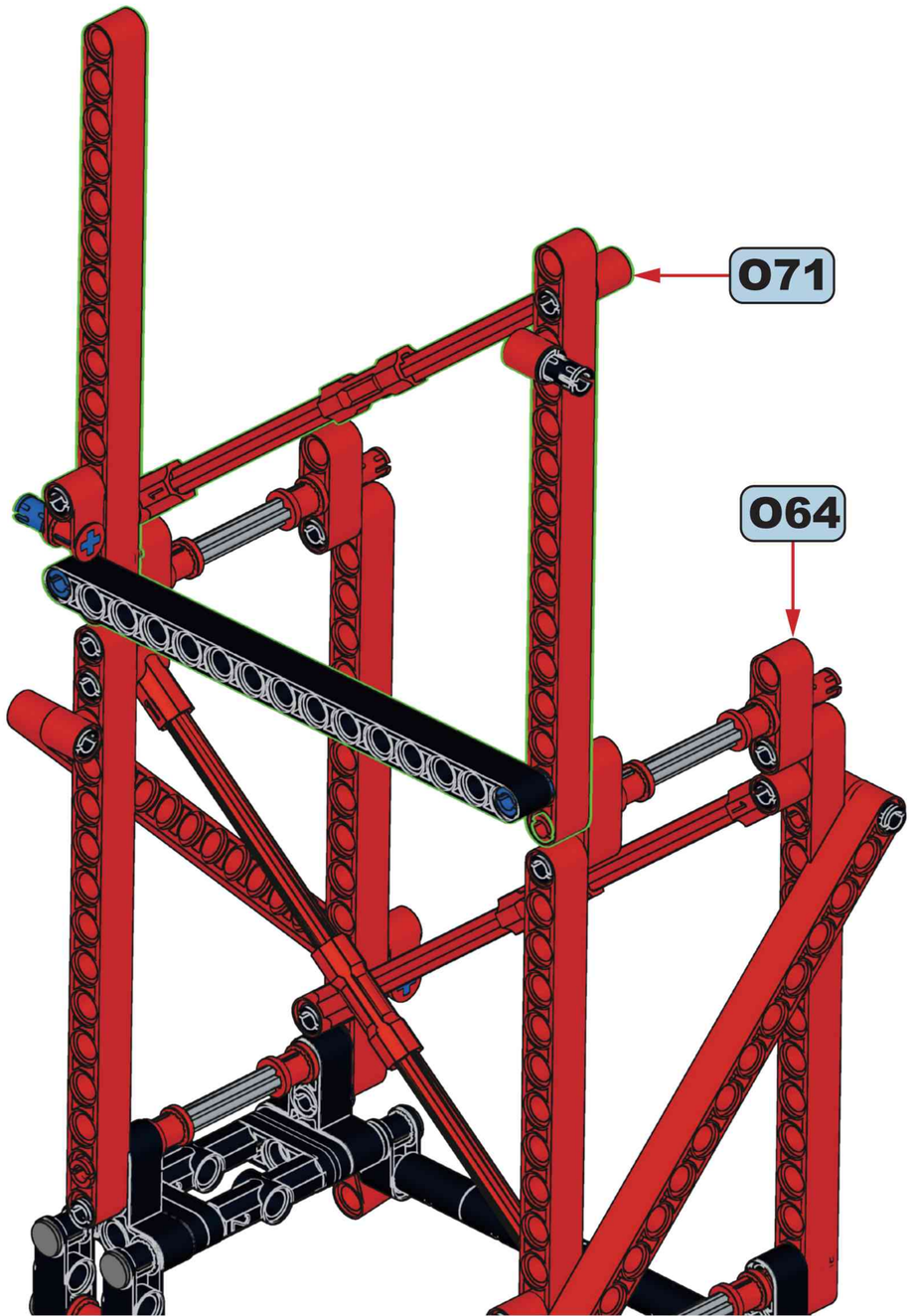

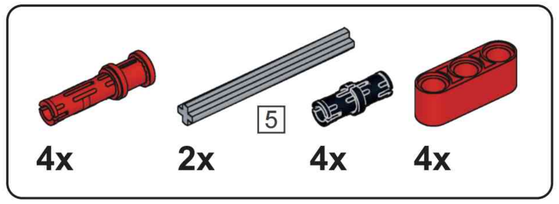

073

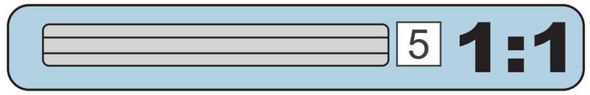

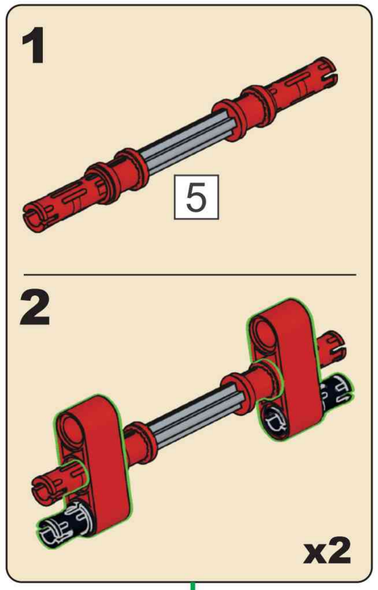

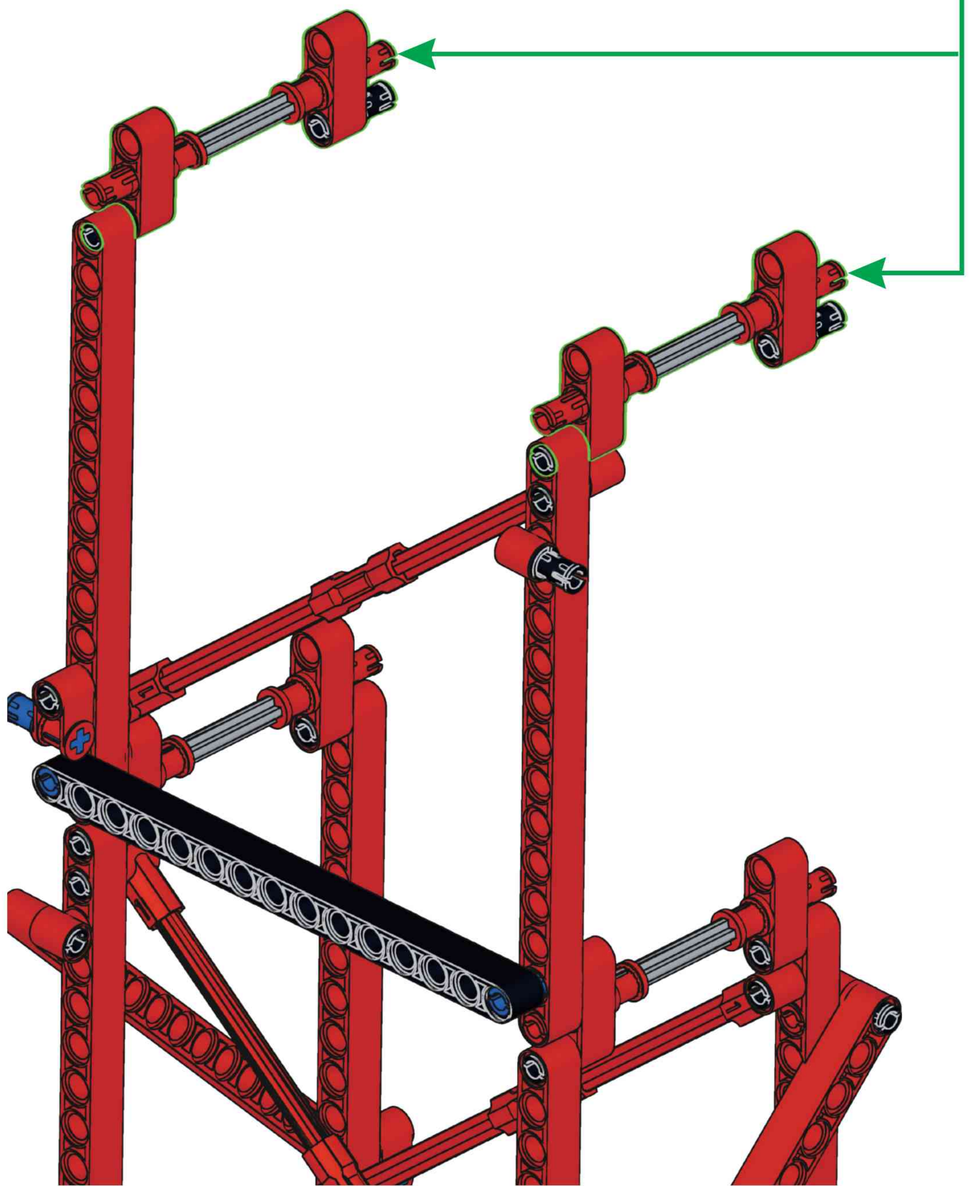

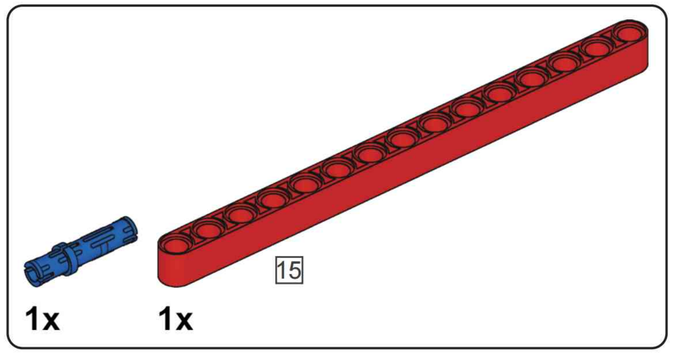

074

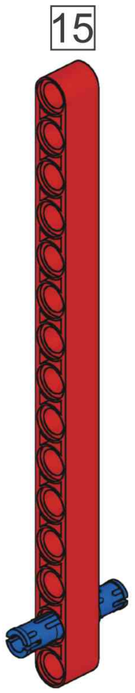

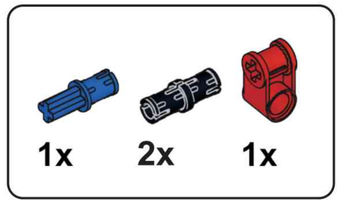

075

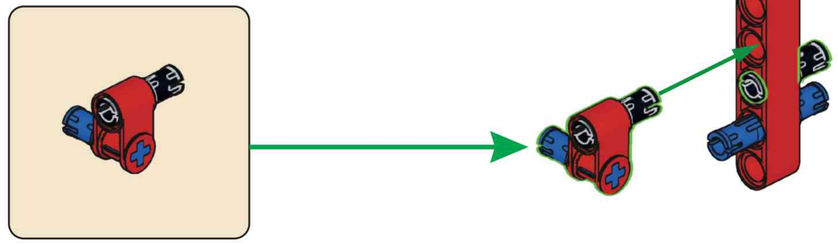

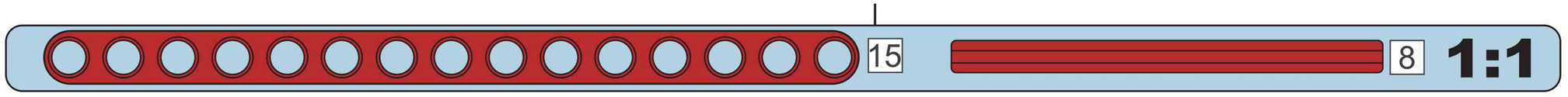

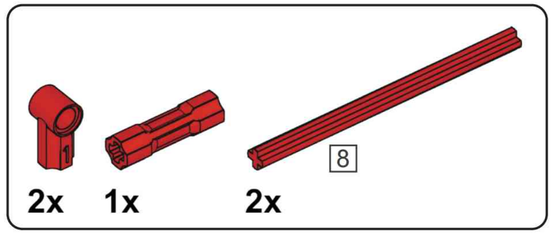

076

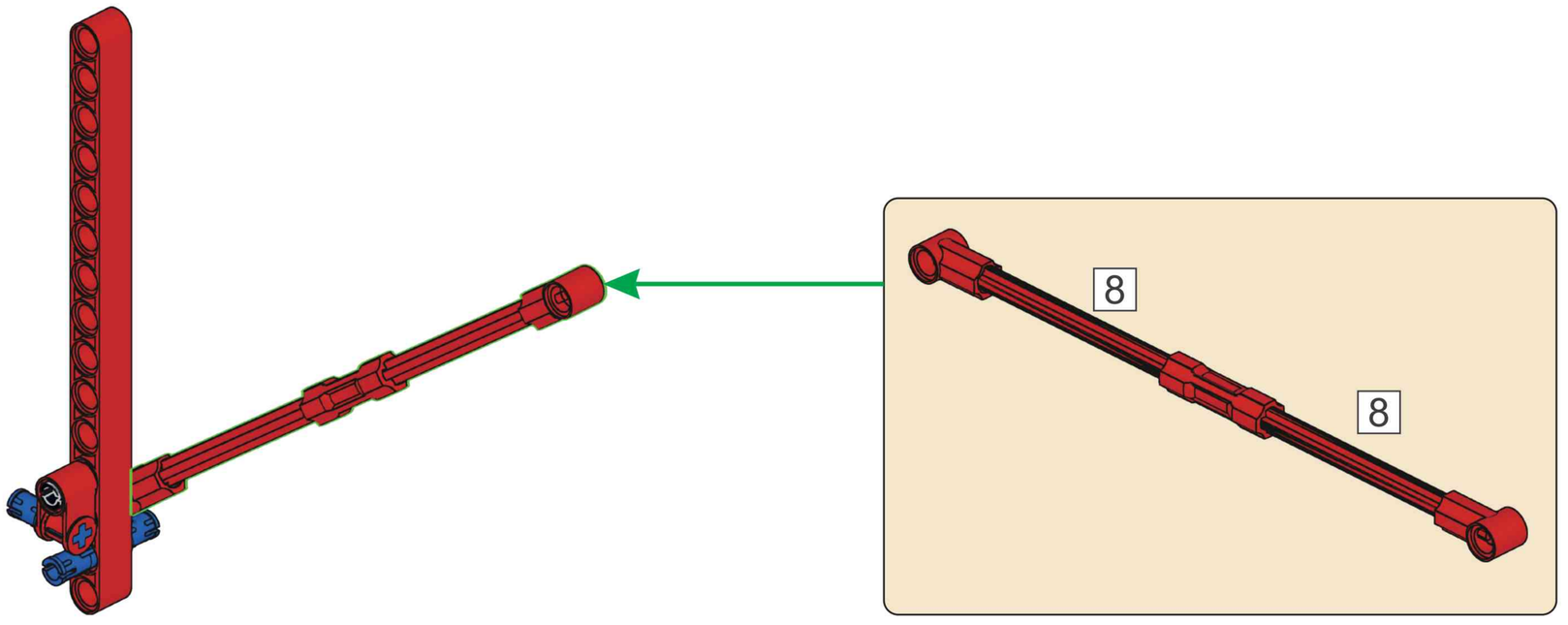

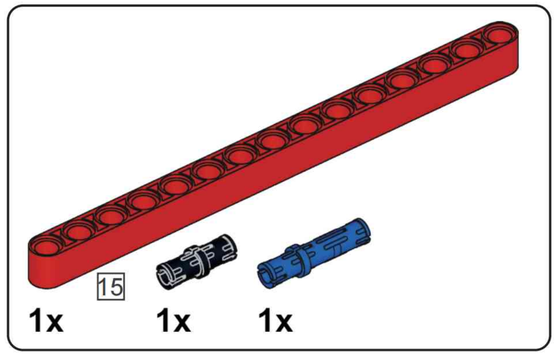

077

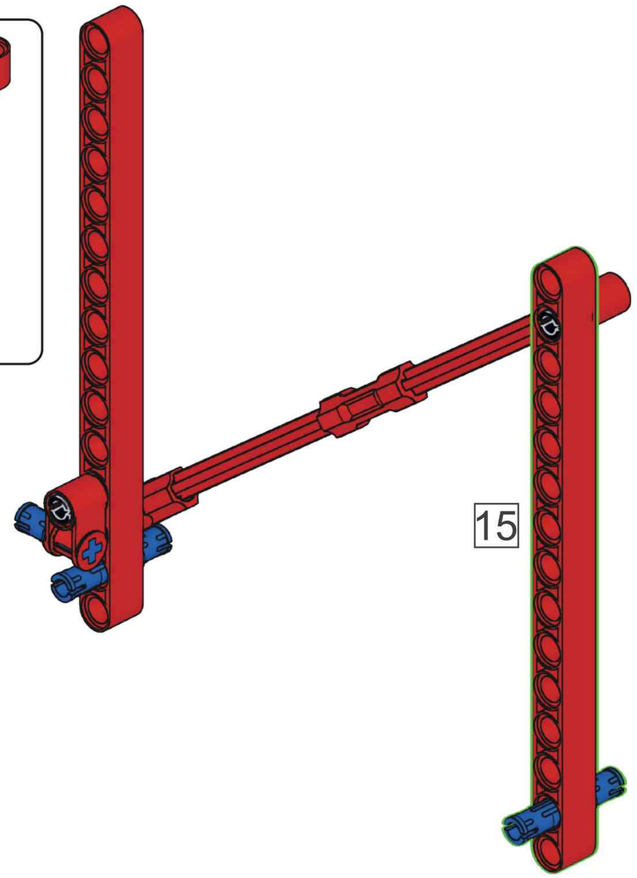

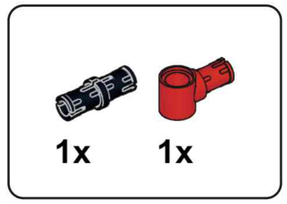

078

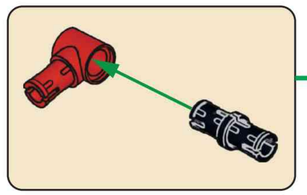

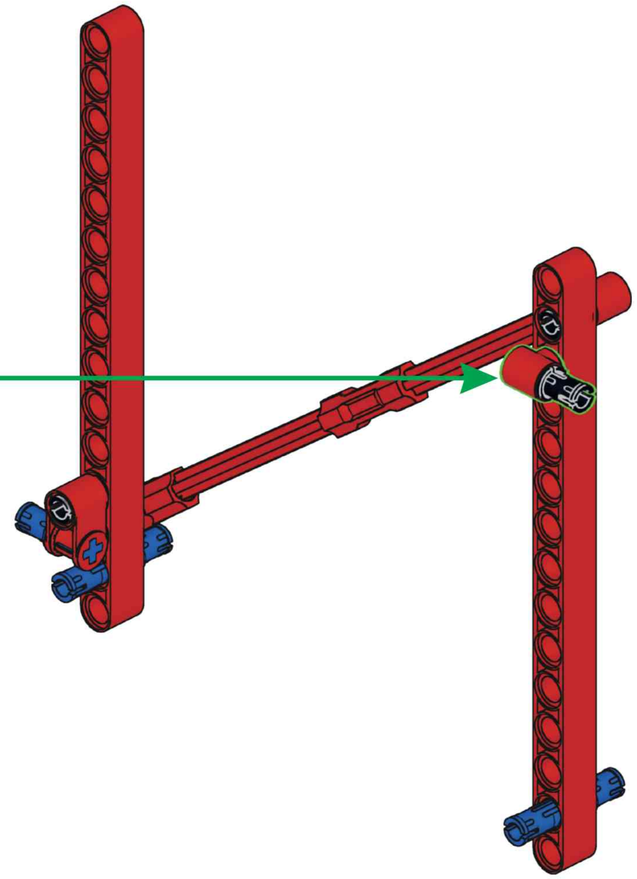

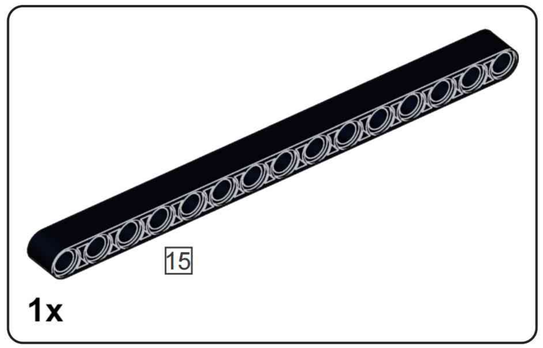

079

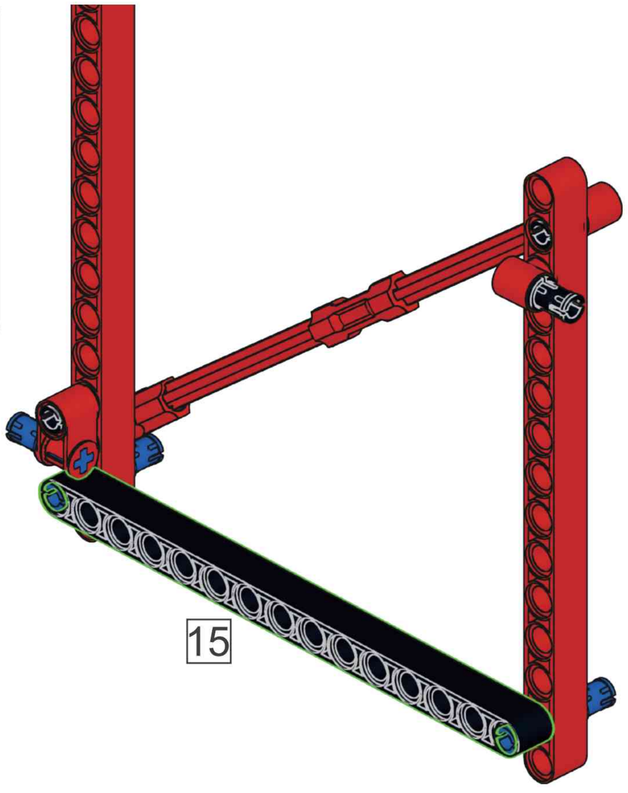

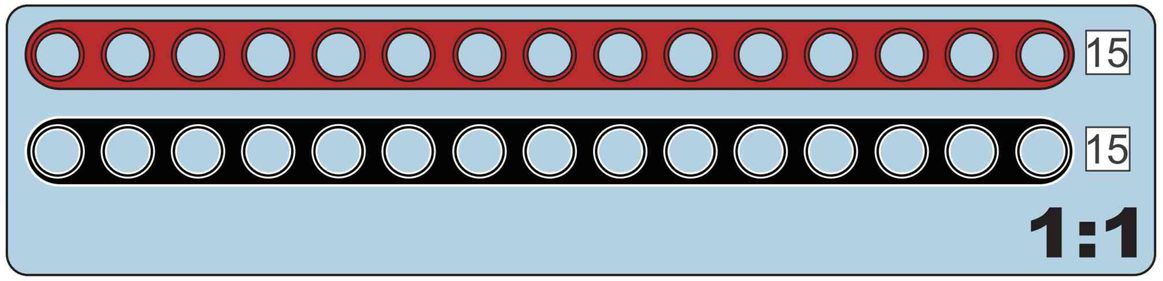

O80

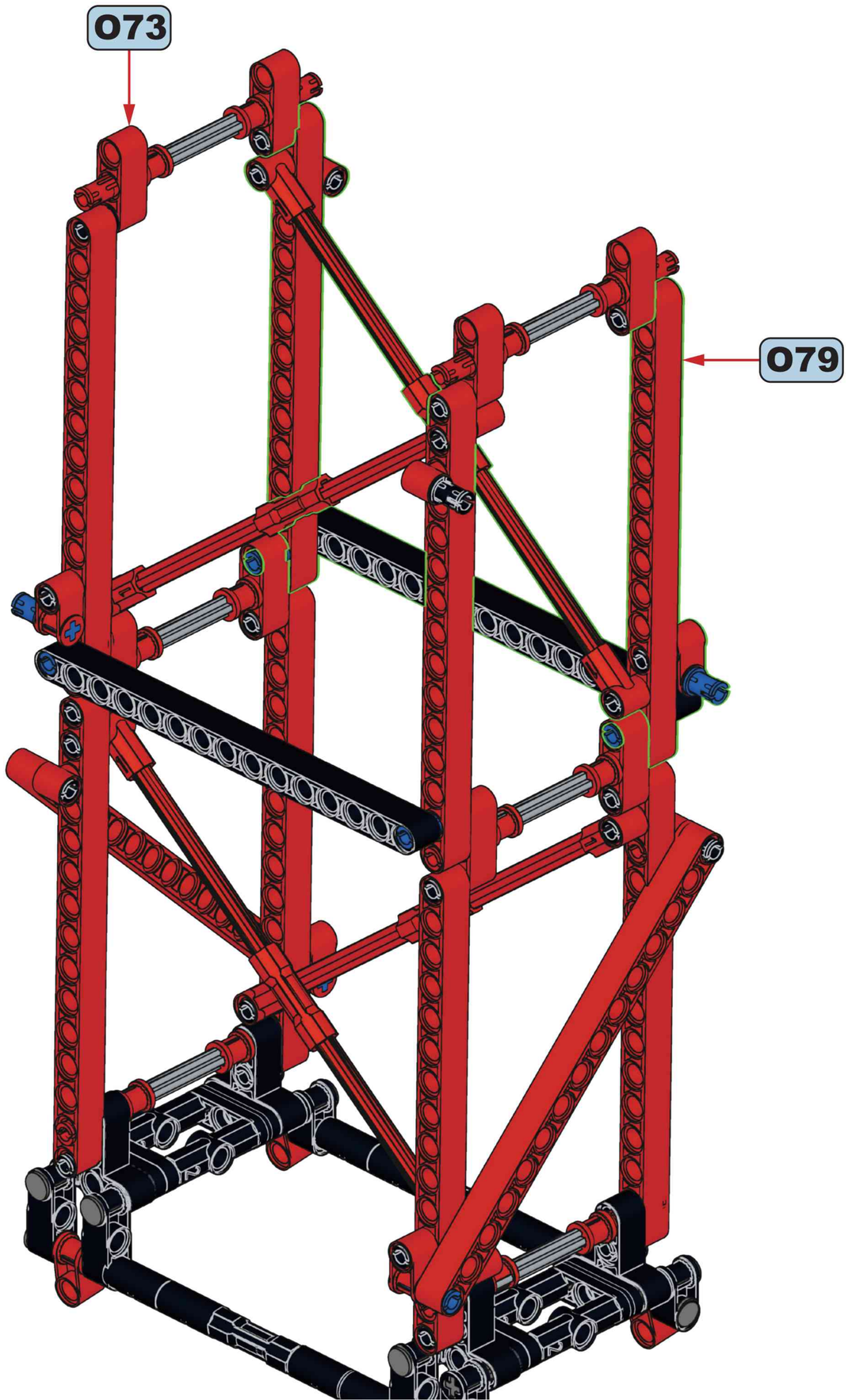

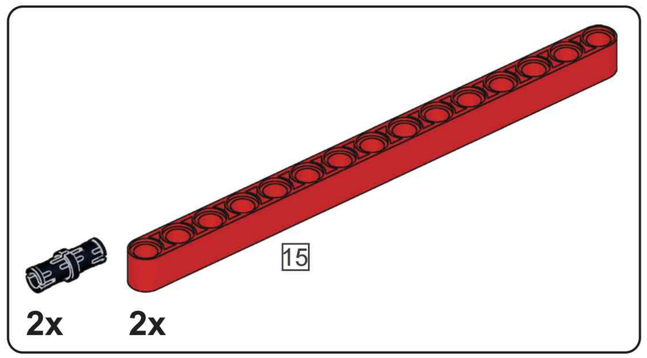

081

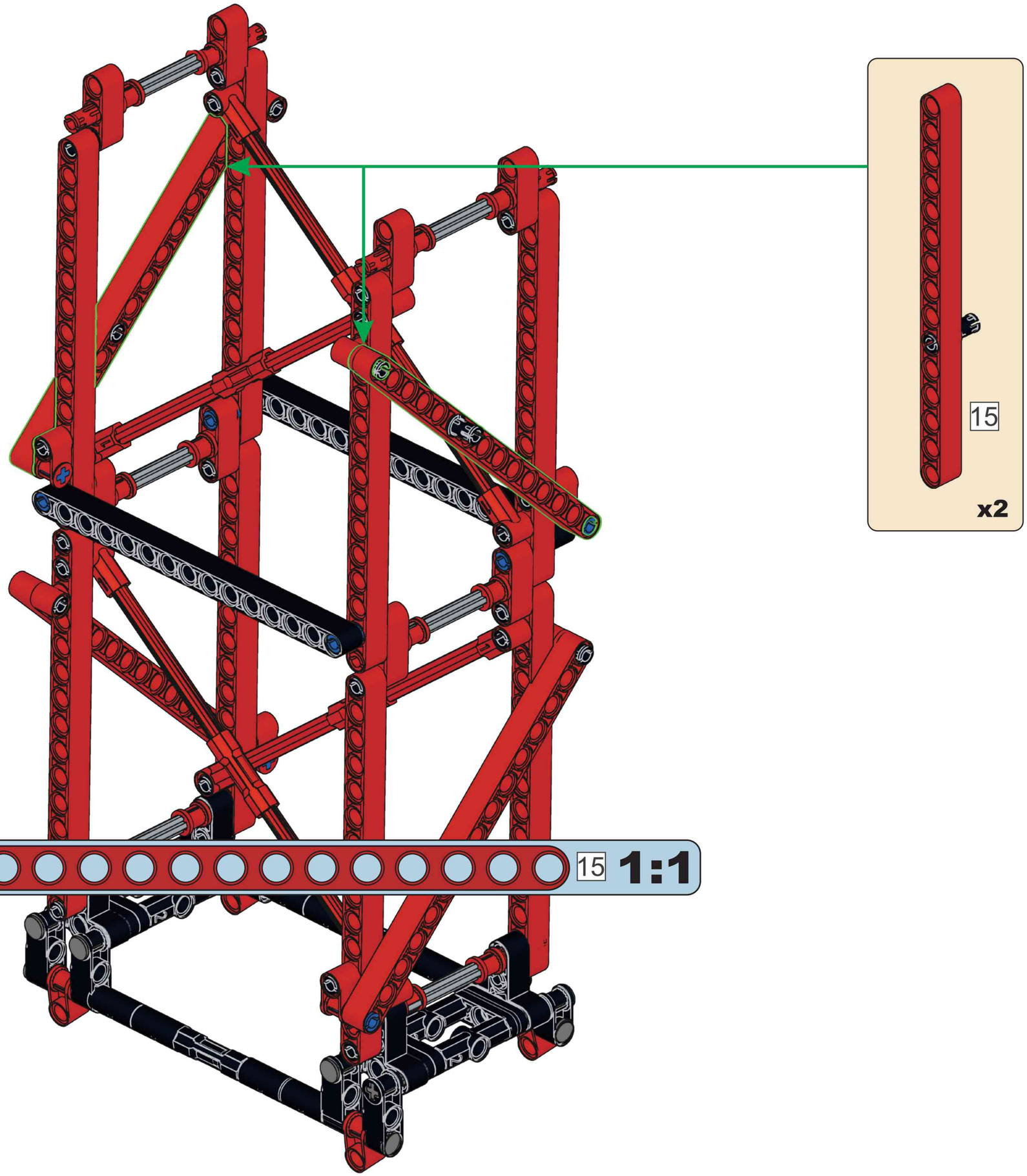

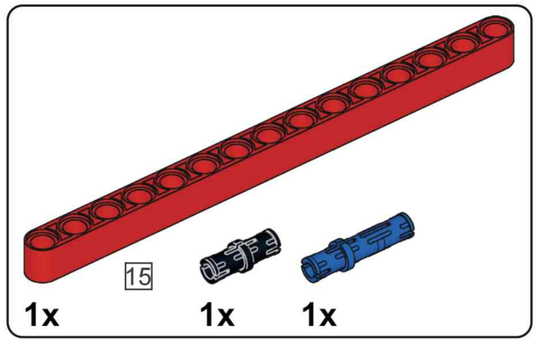

082

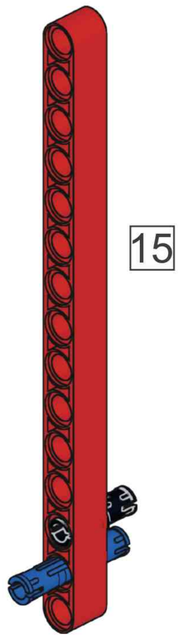

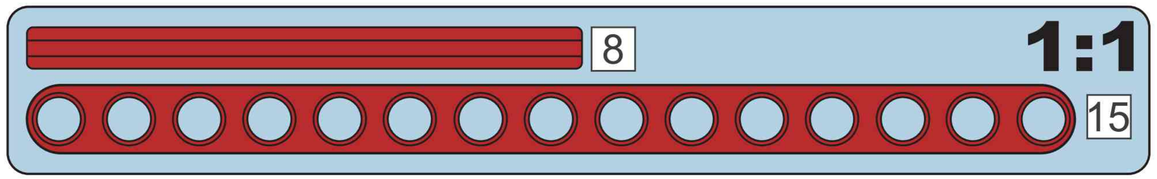

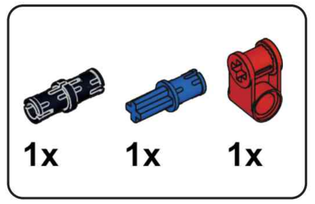

083

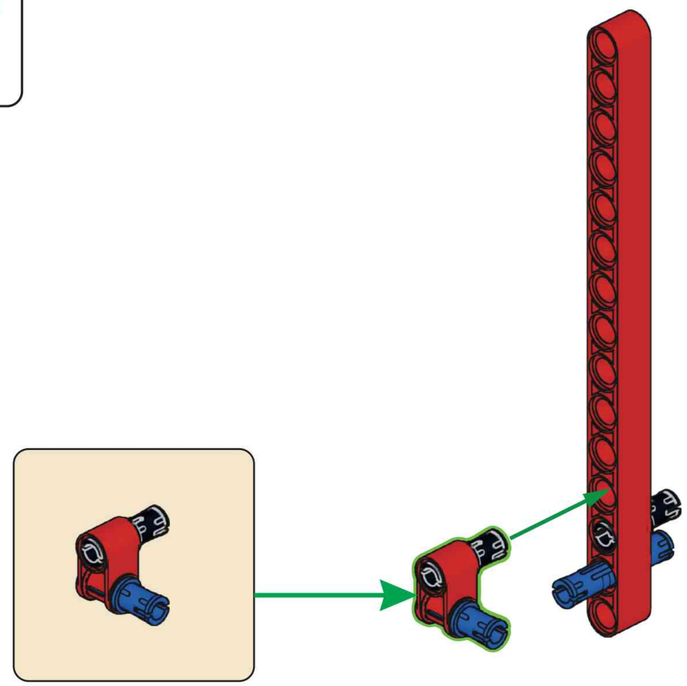

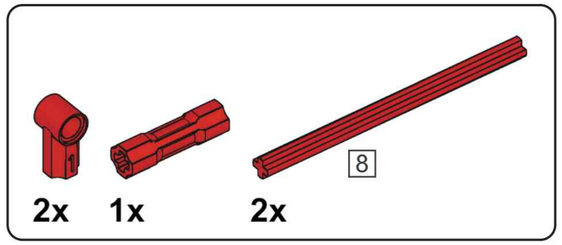

084

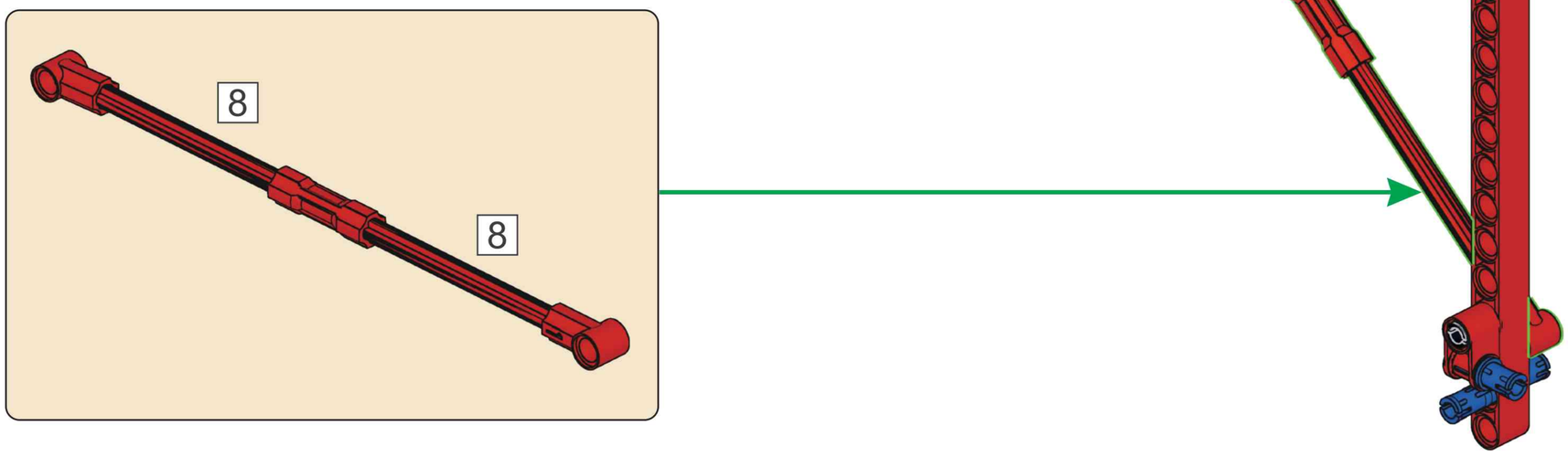

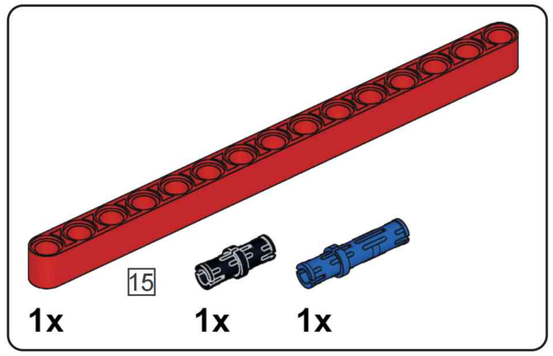

085

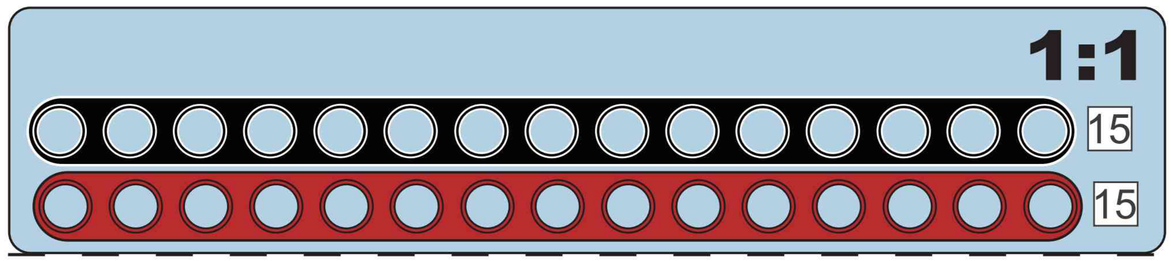

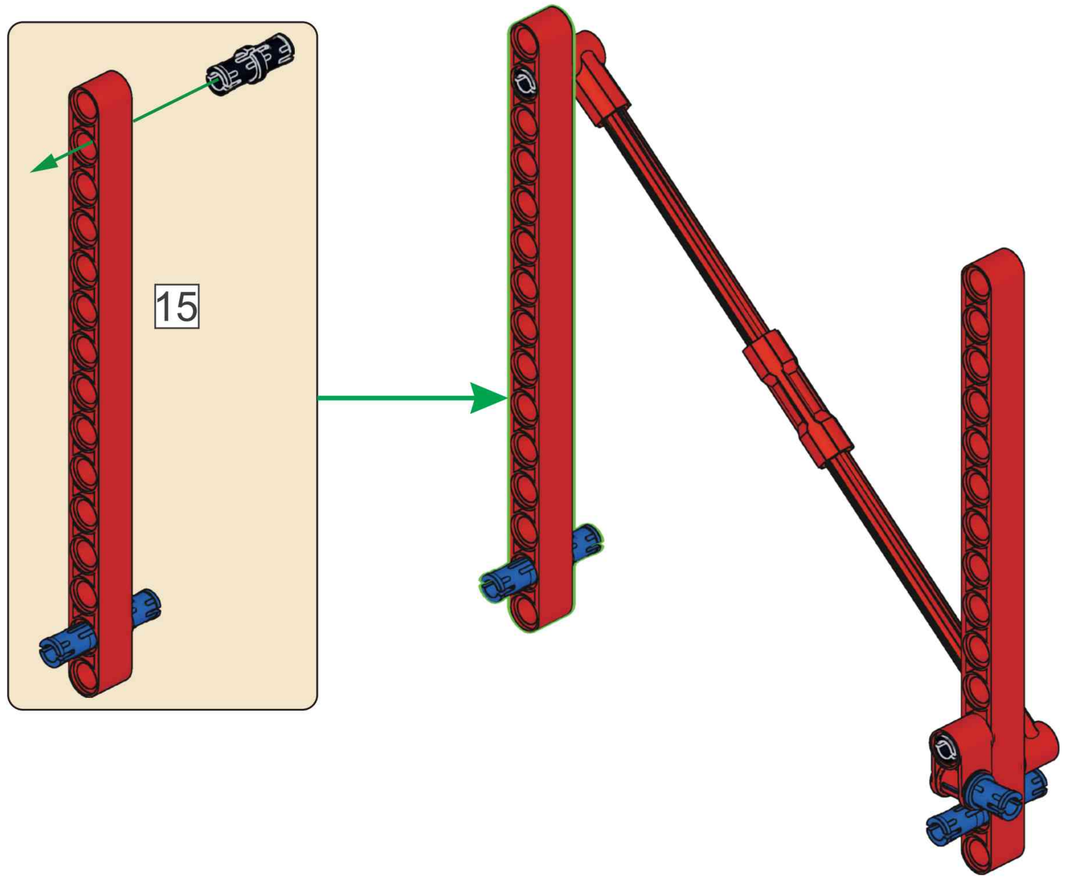

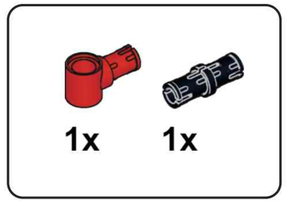

086

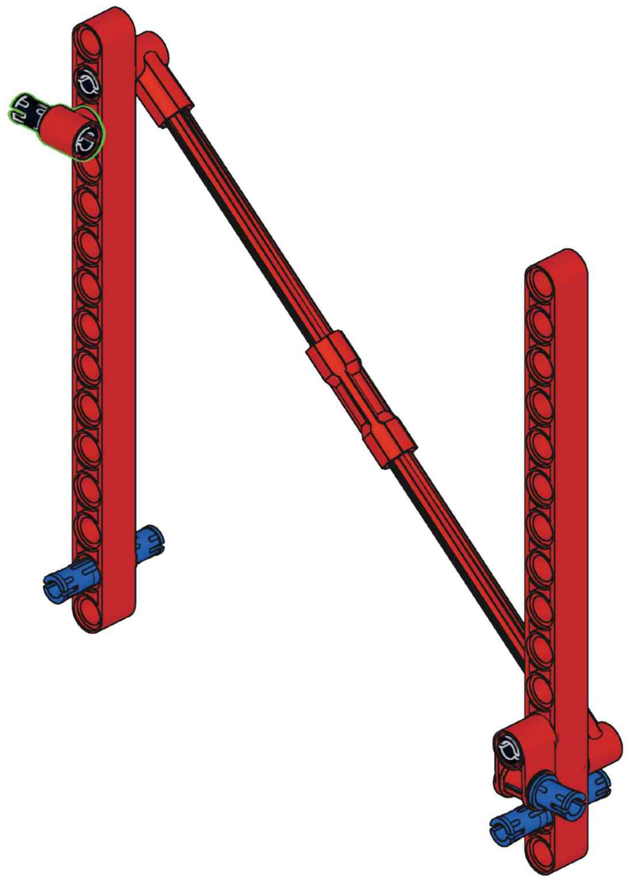

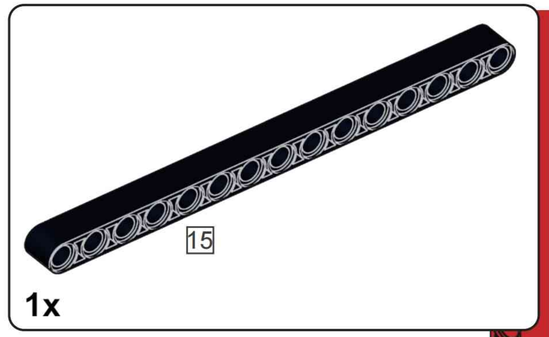

087

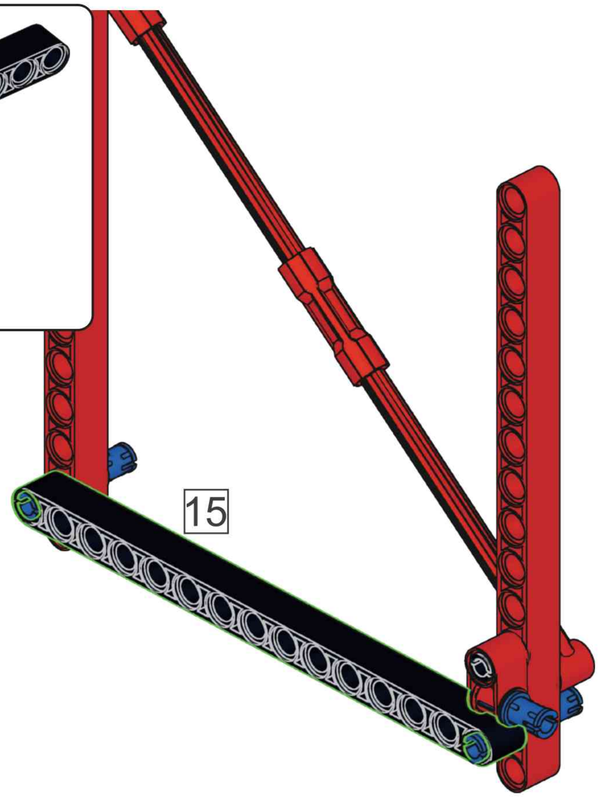

O88

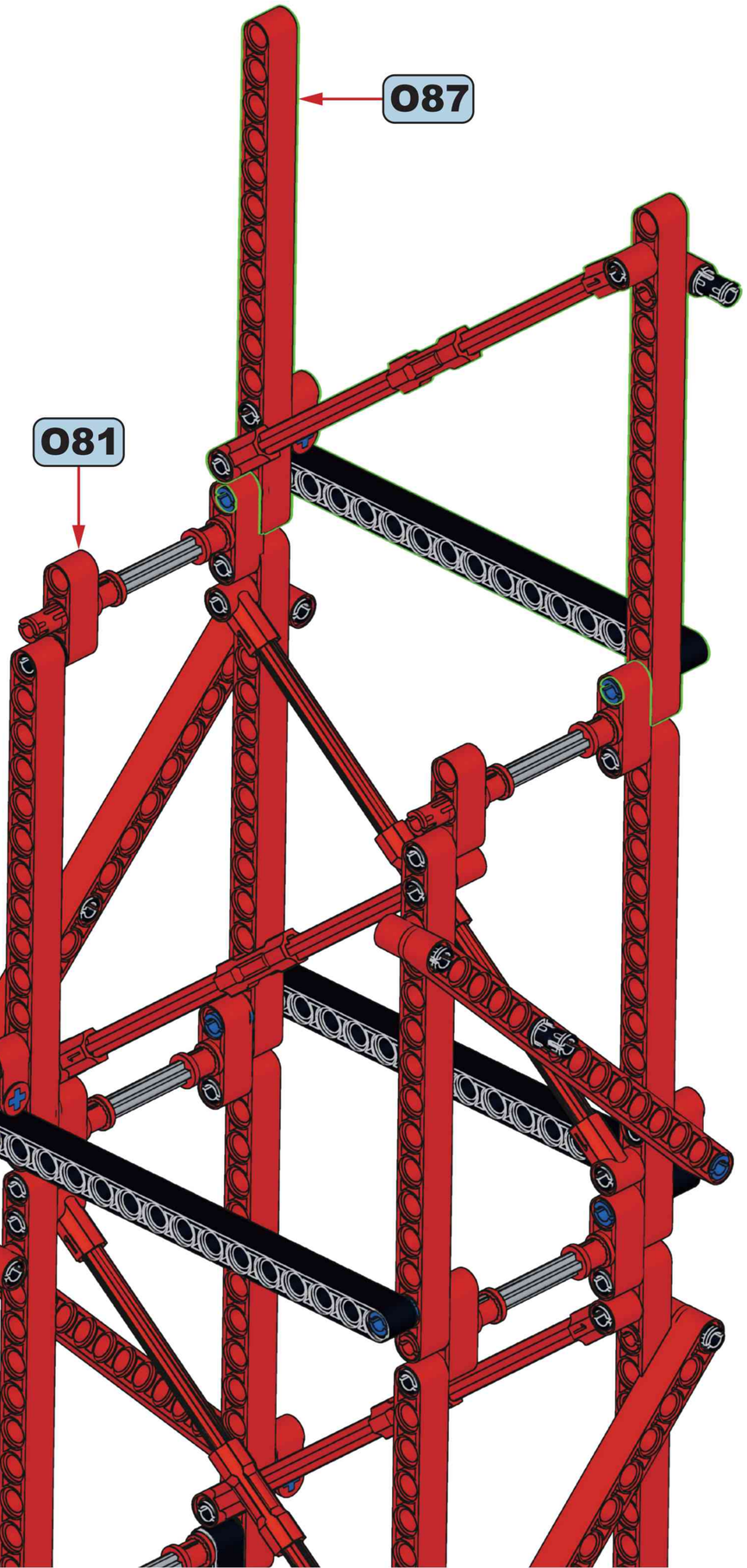

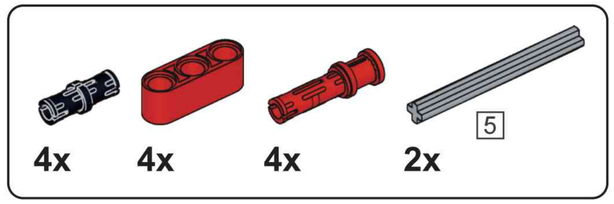

O89

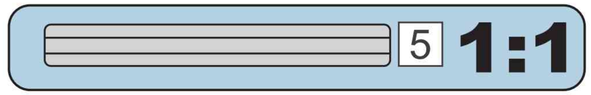

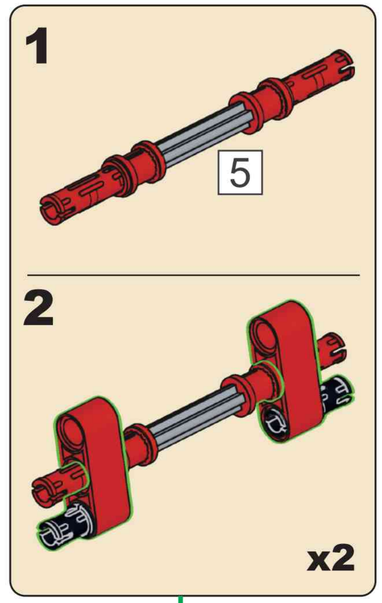

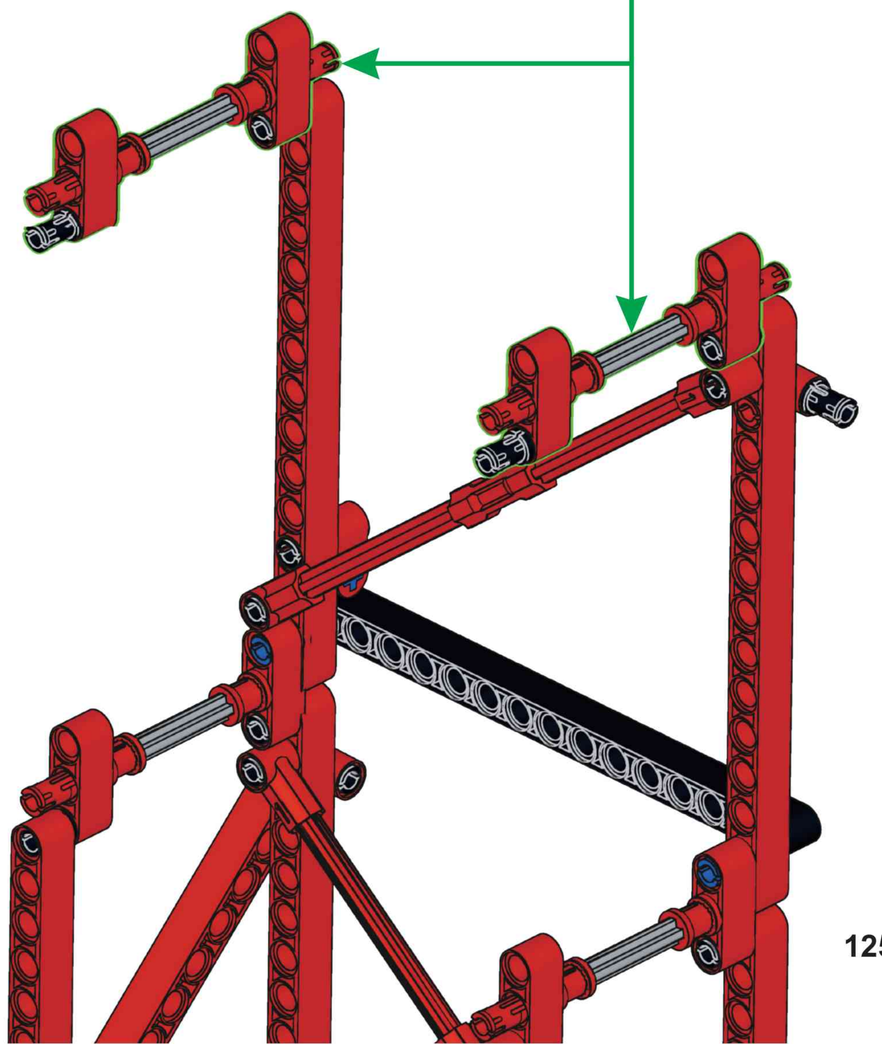

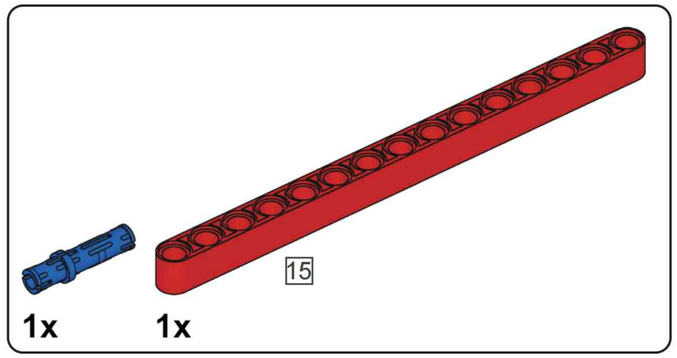

O90

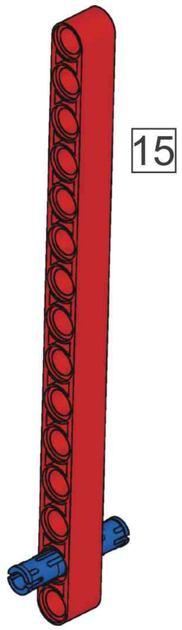

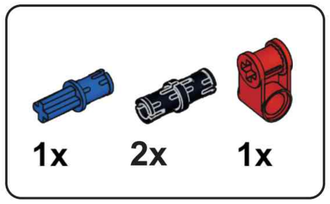

O91

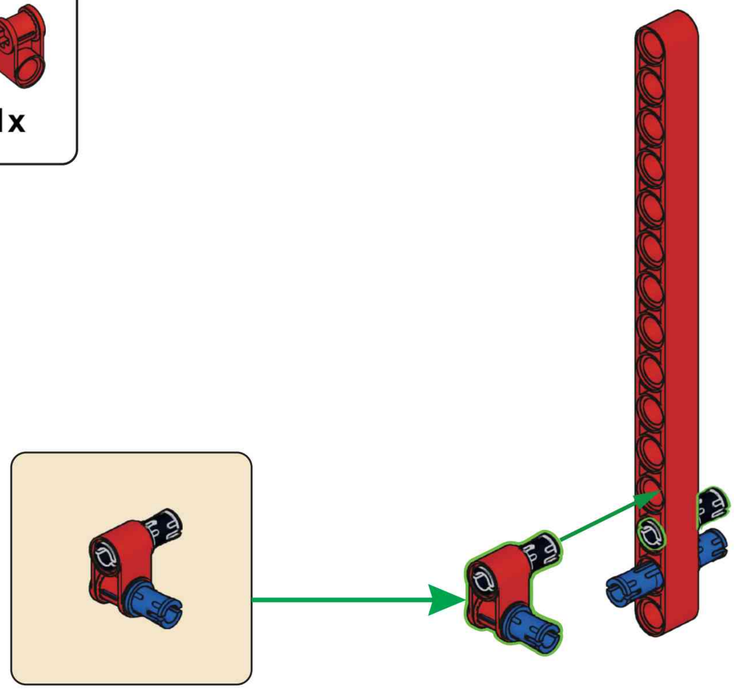

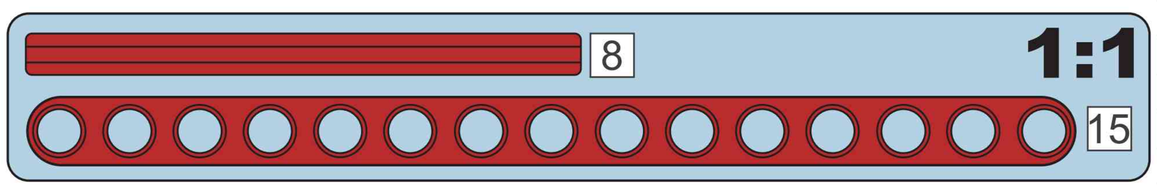

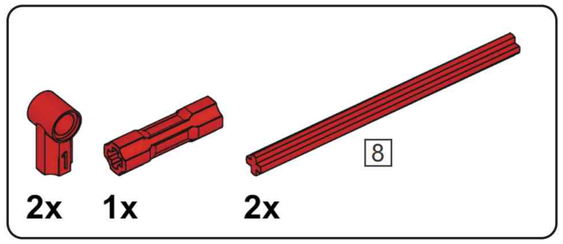

O92

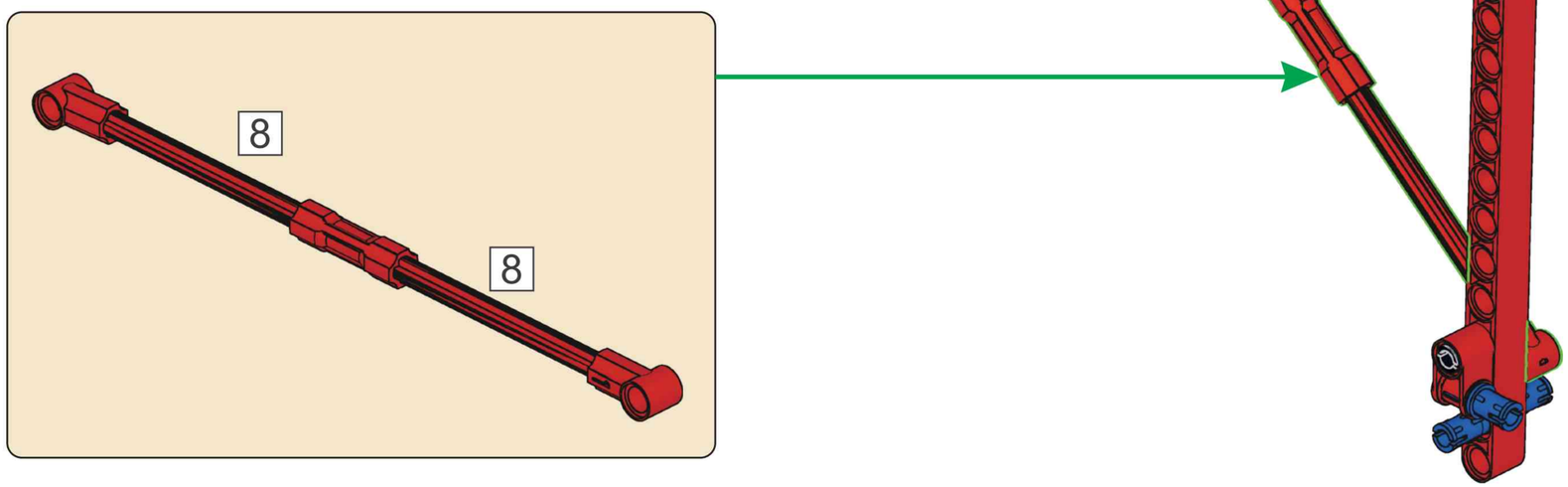

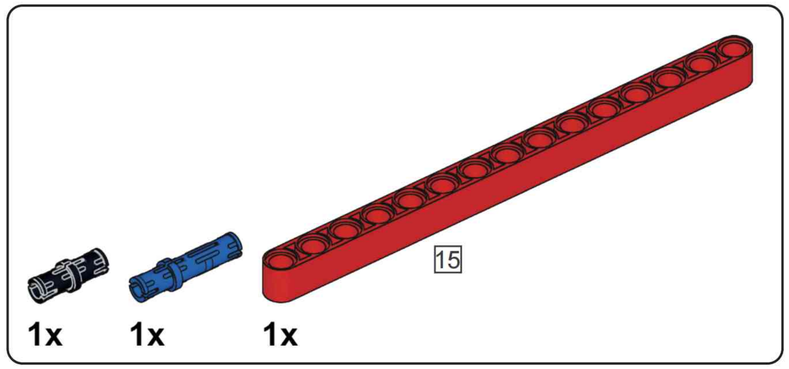

093

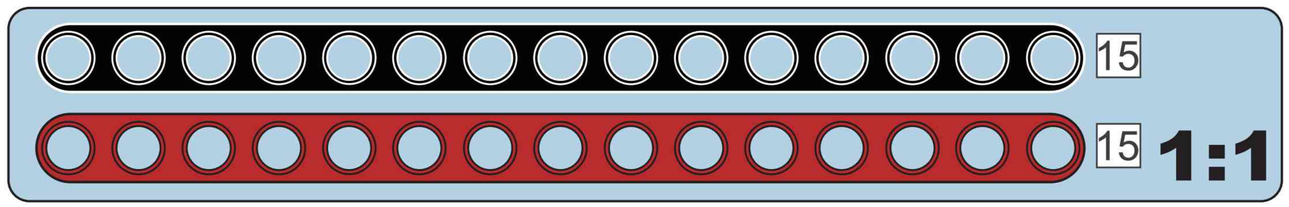

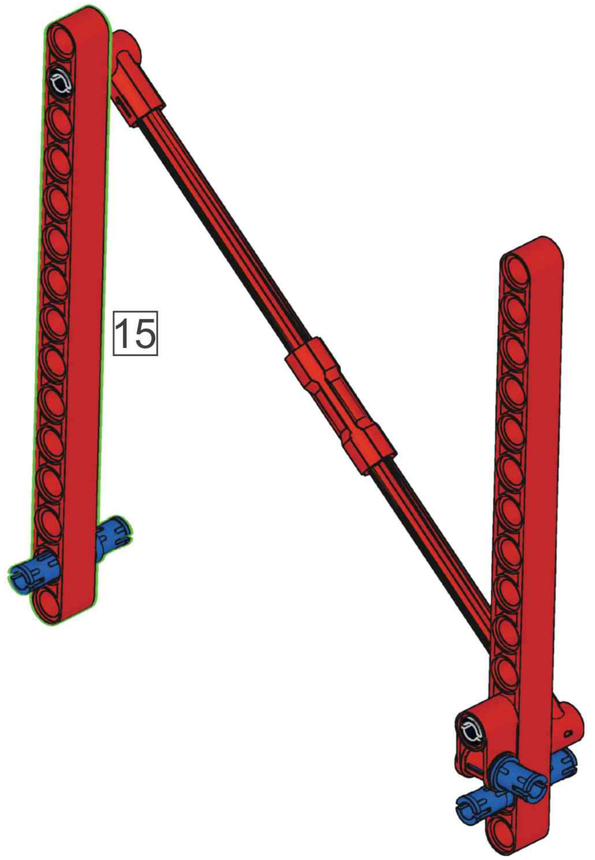

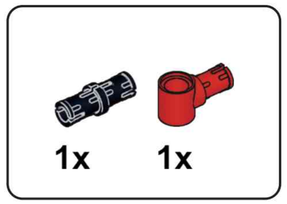

094

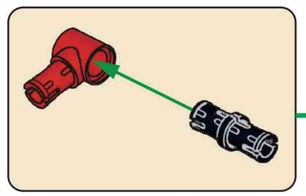

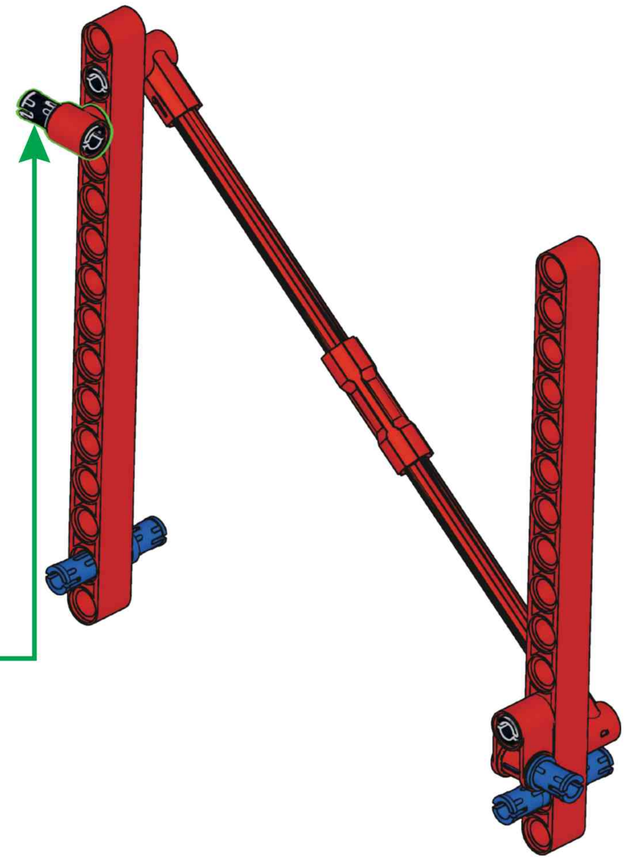

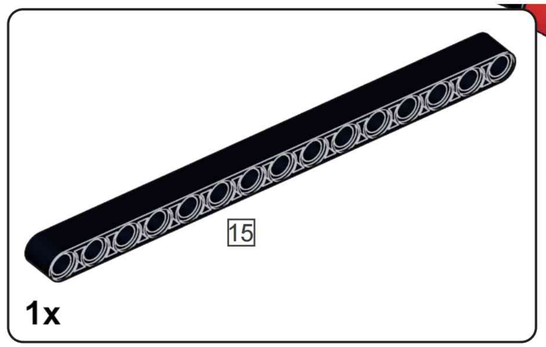

095

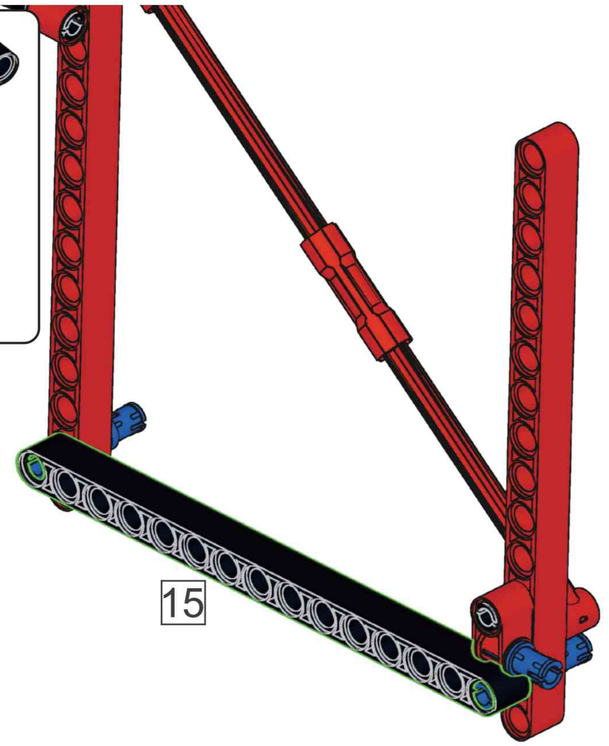

O96



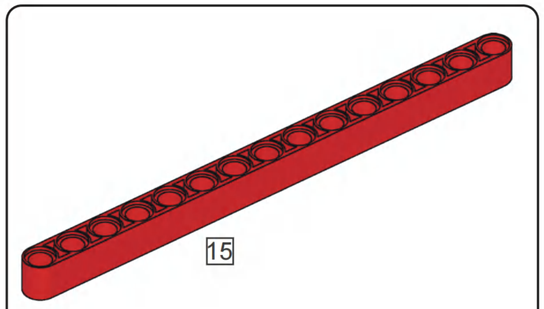

O97

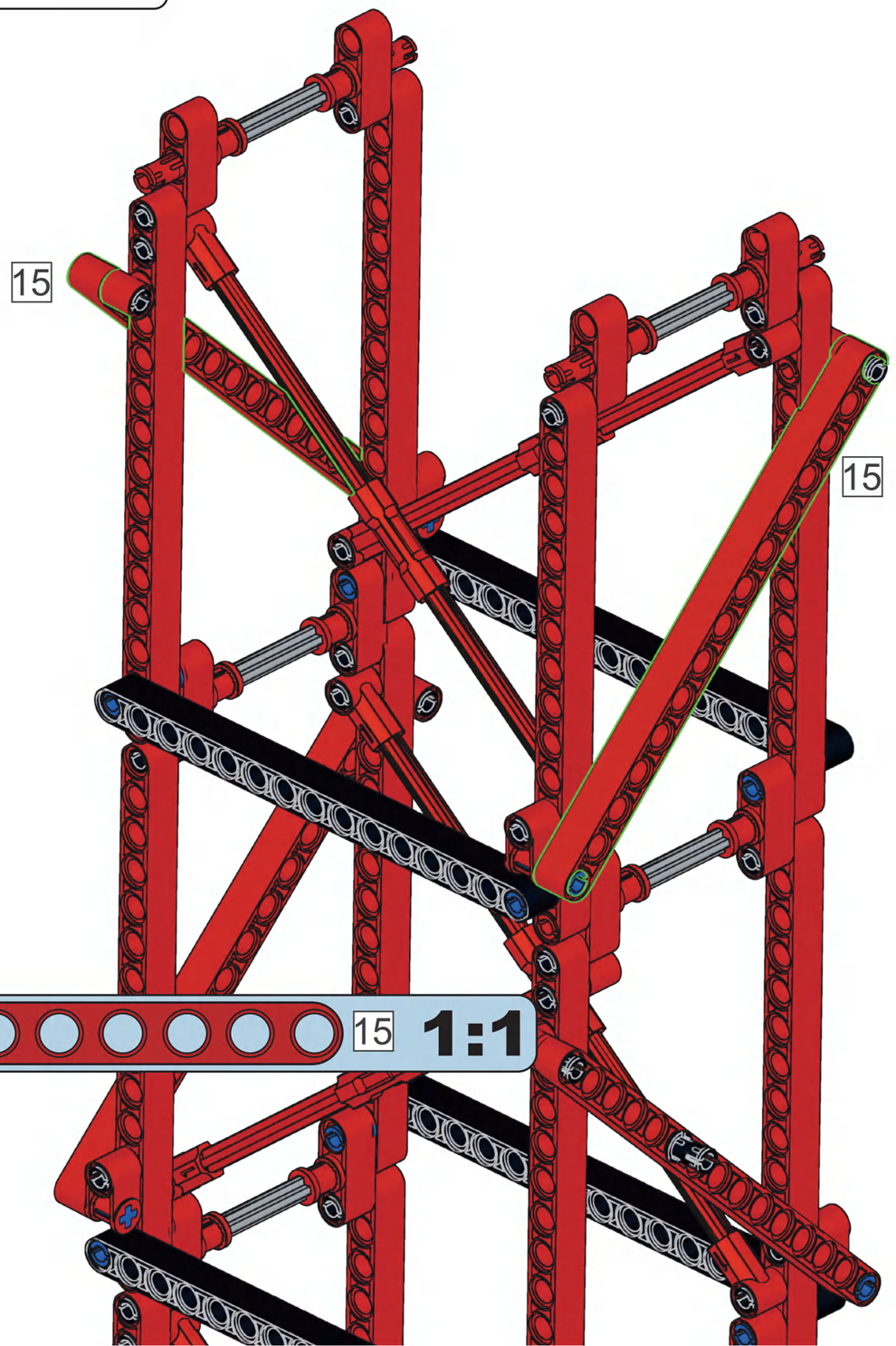

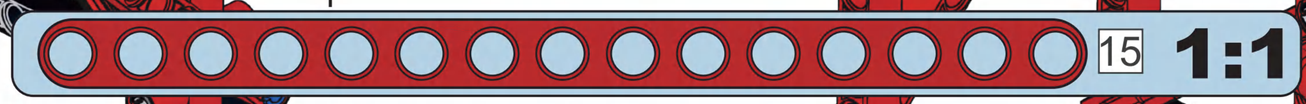

16

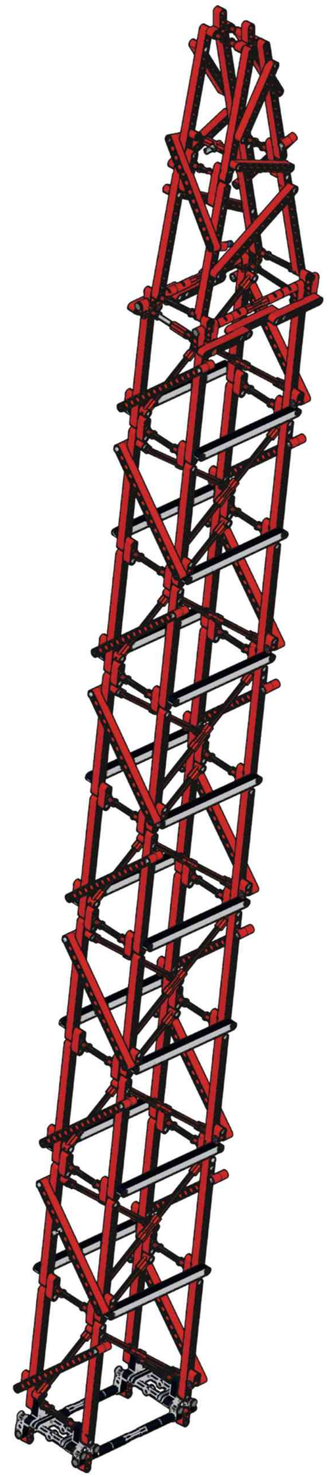

P

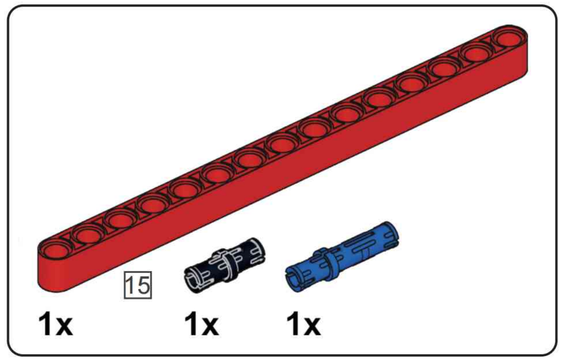

P1

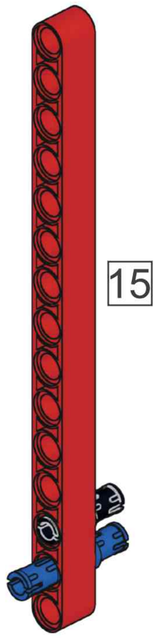

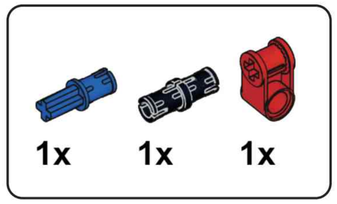

P2

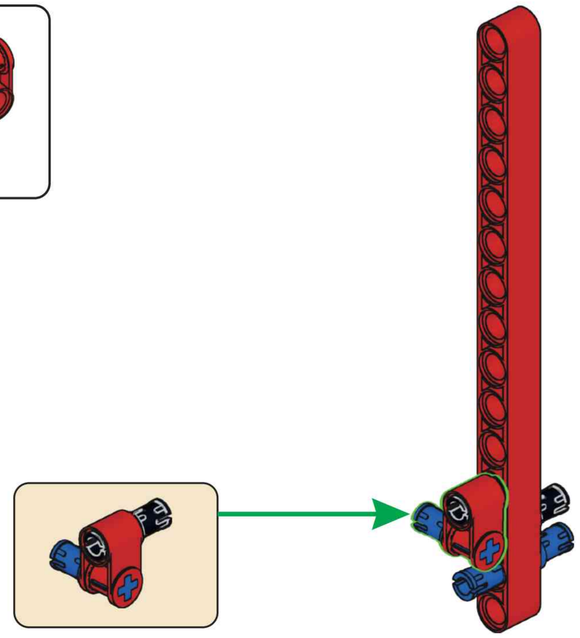

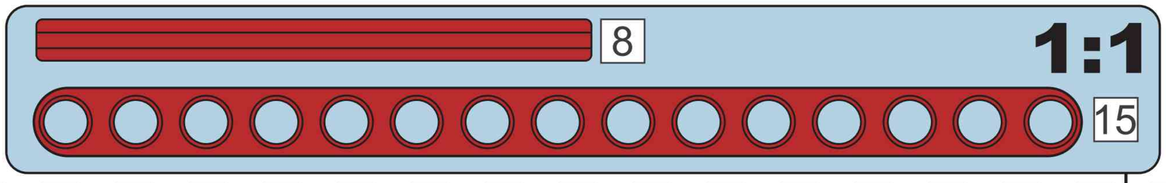

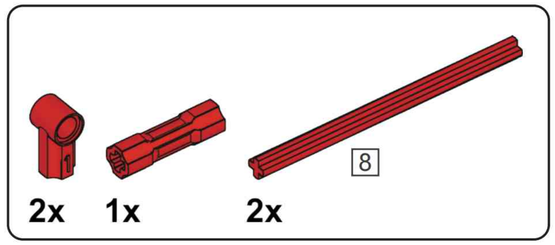

P3

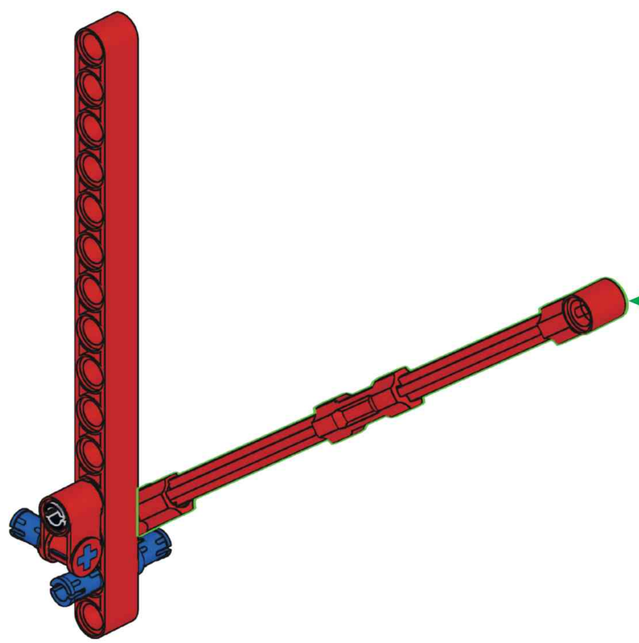

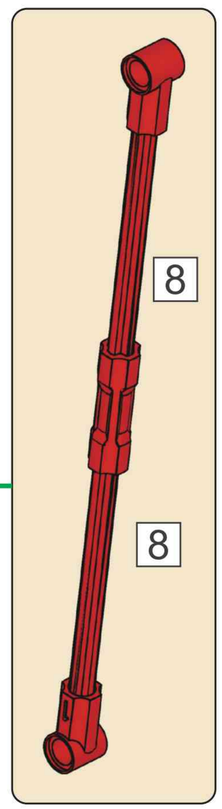

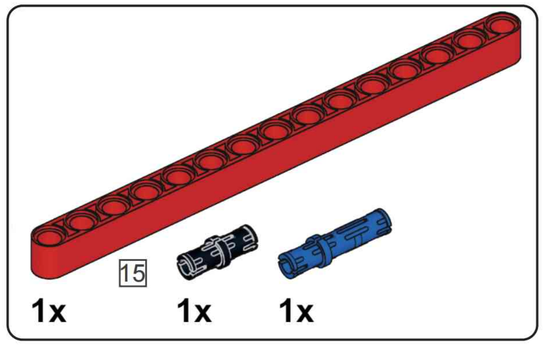

P4

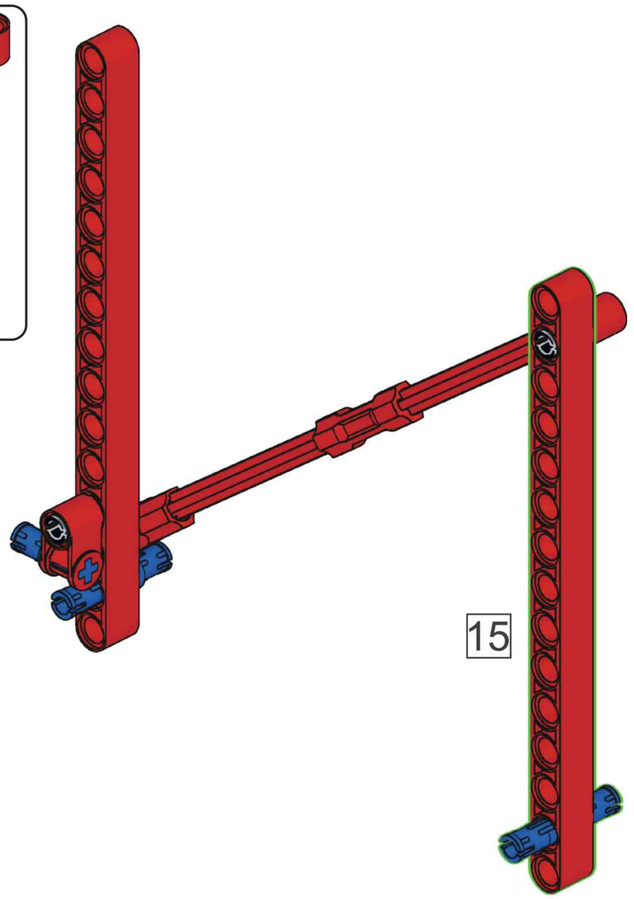

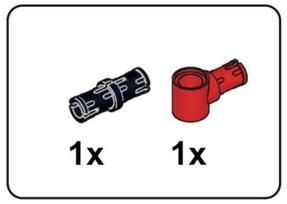

P5

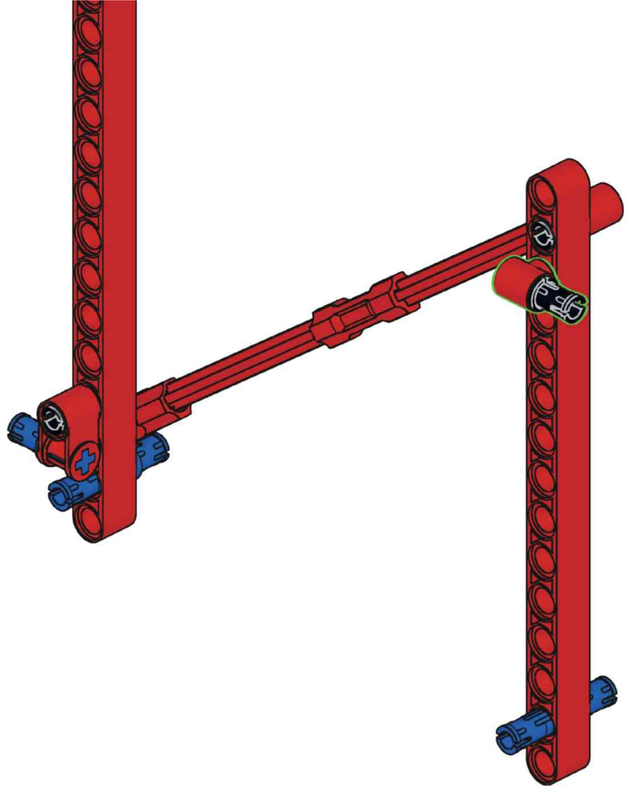

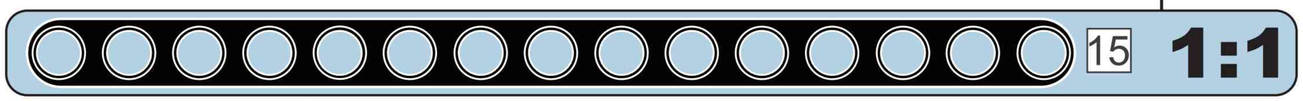

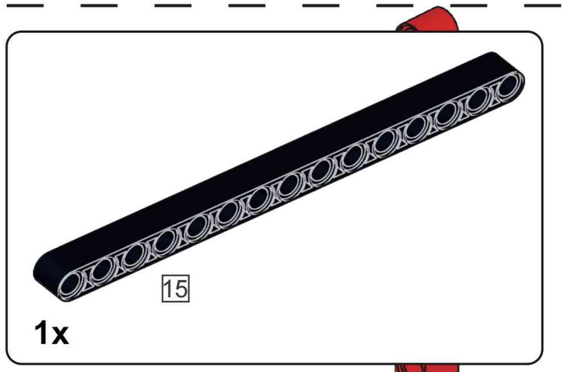

P6

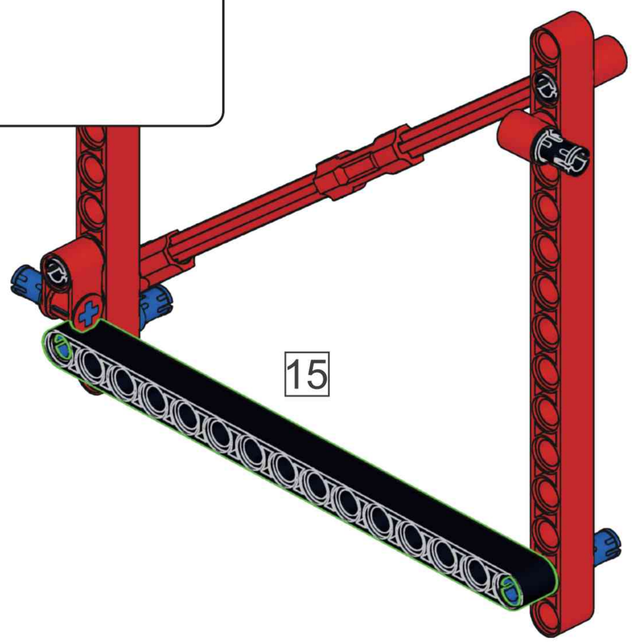

P7

P6

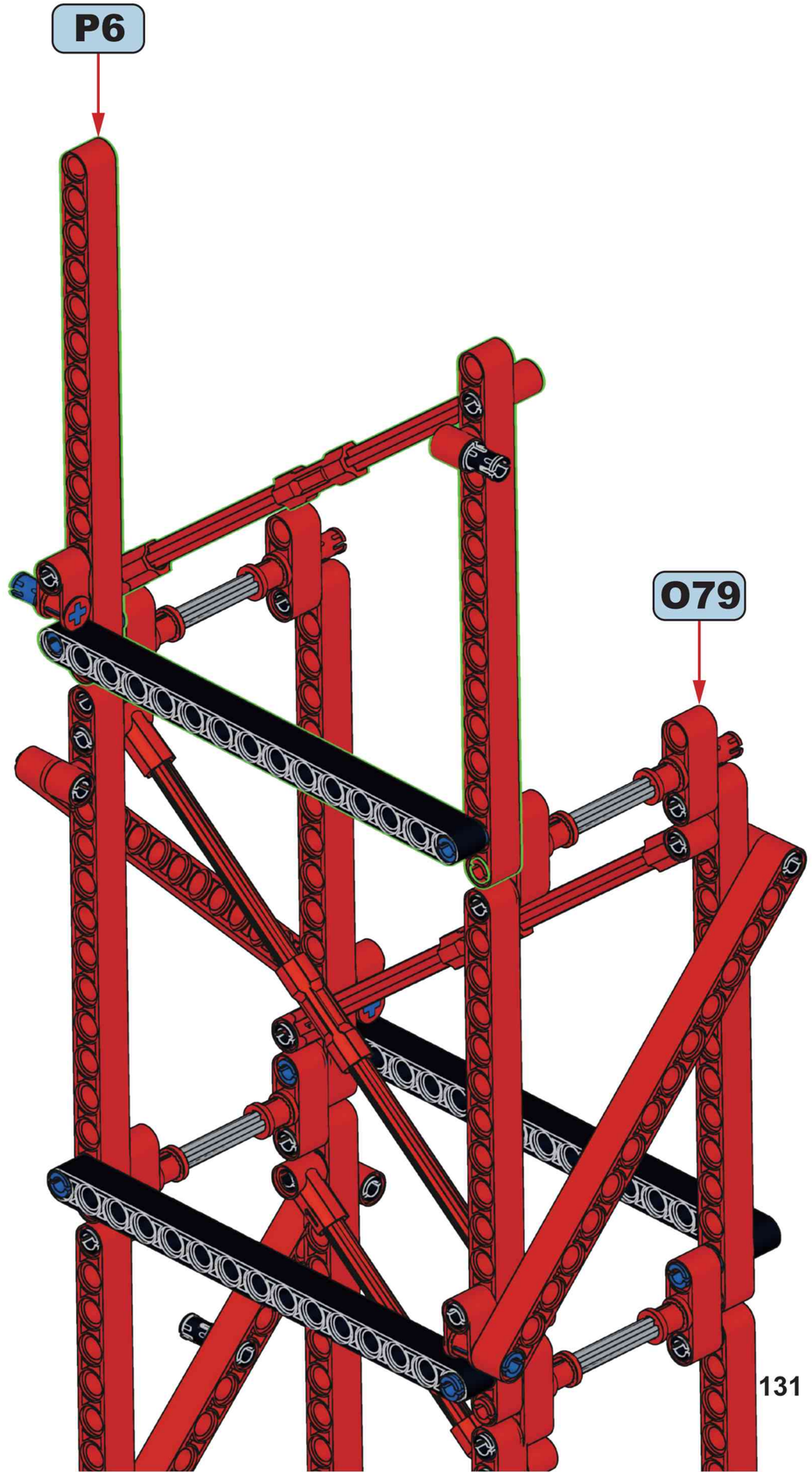

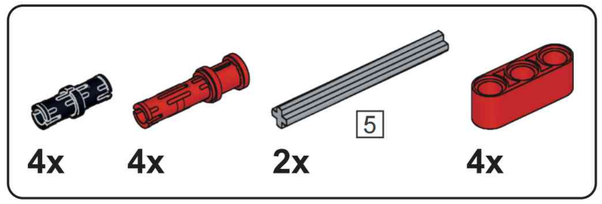

P8

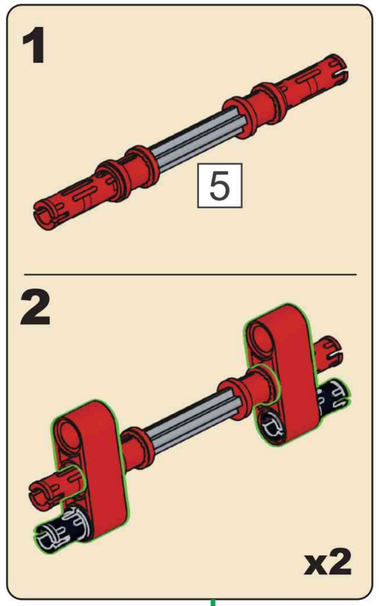

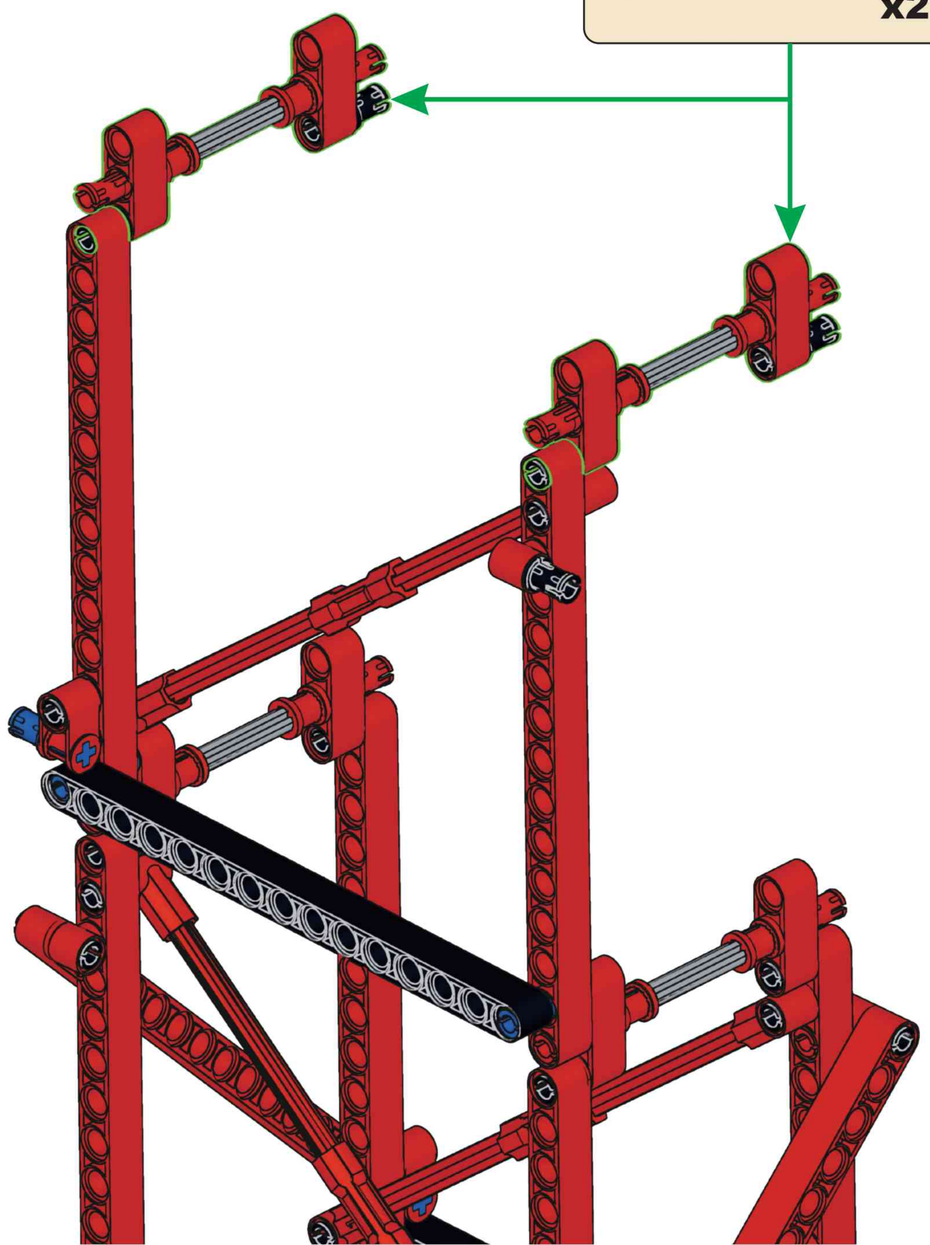

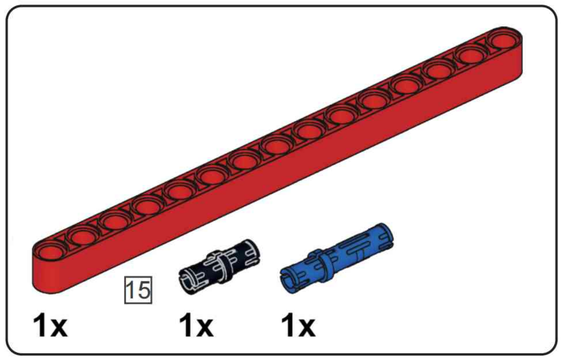

P9

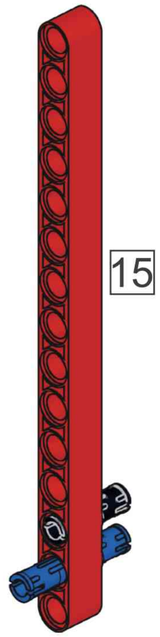

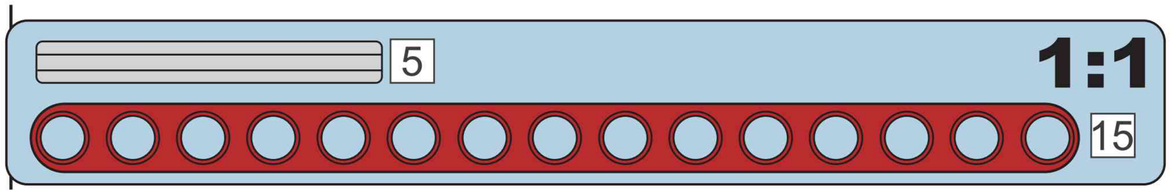

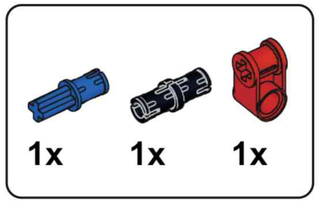

P10

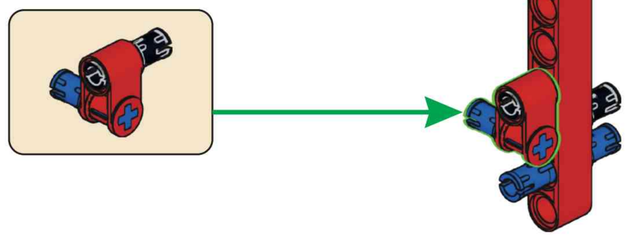

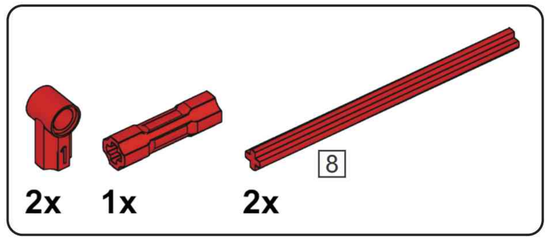

P11

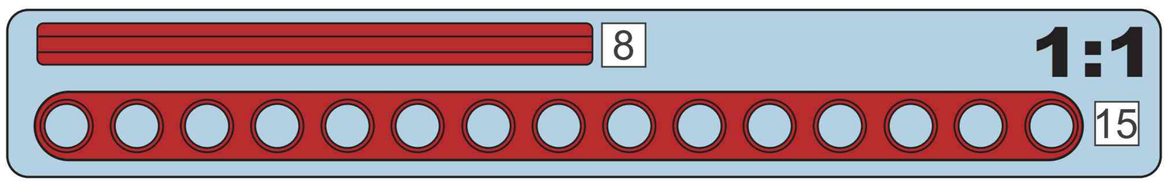

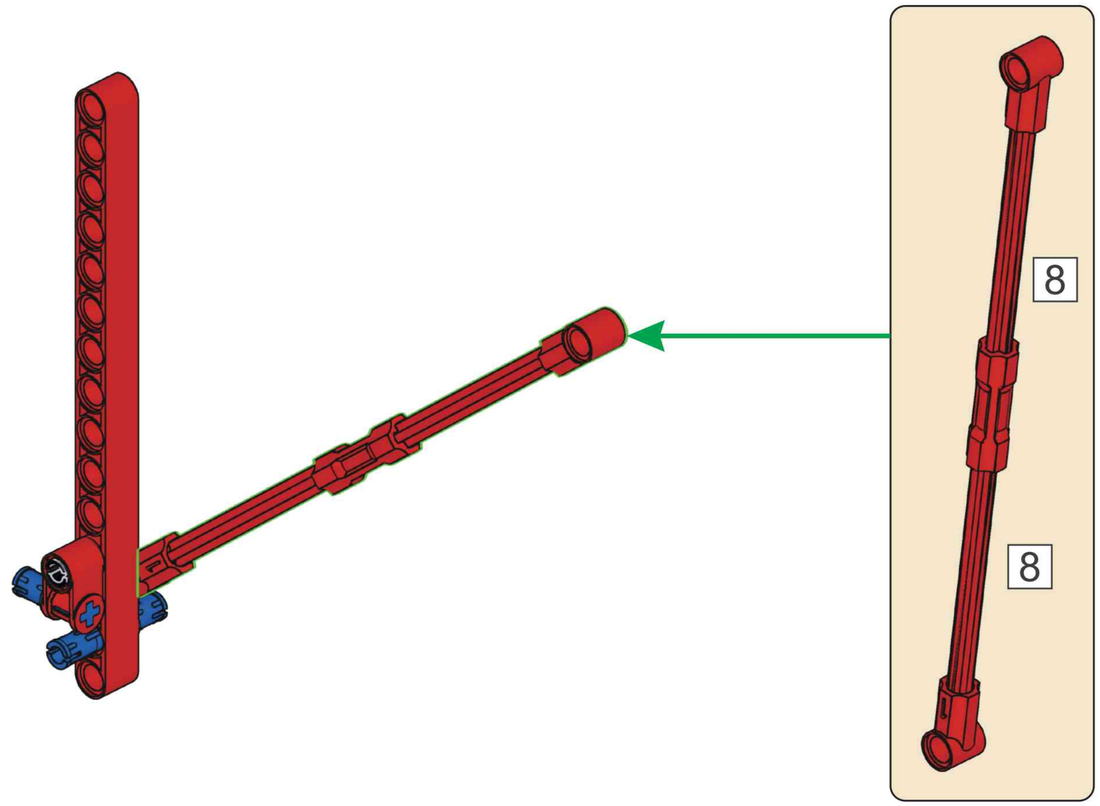

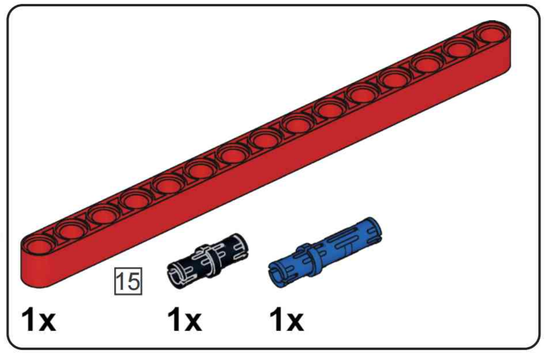

P12

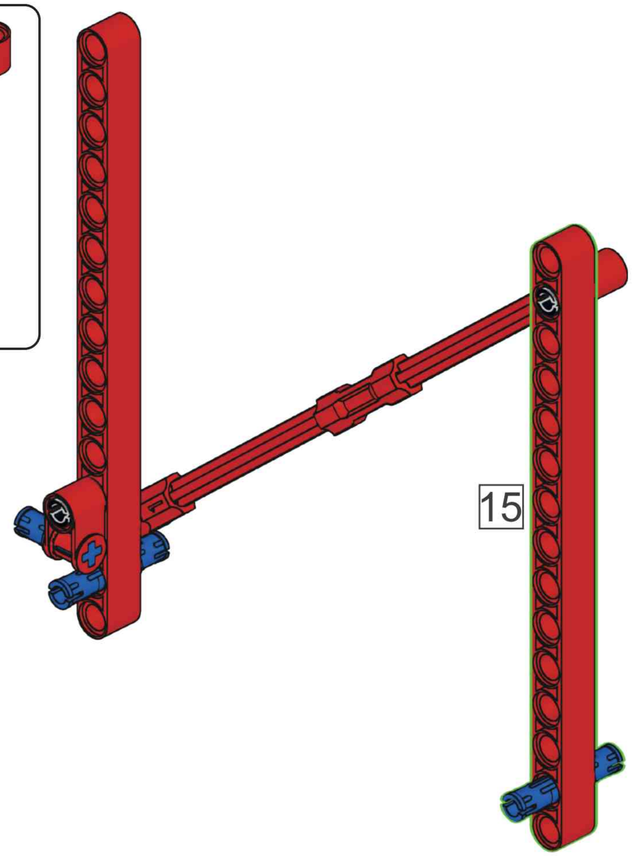

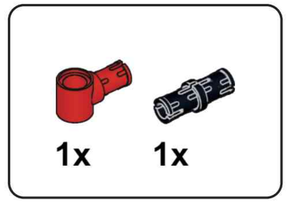

P13

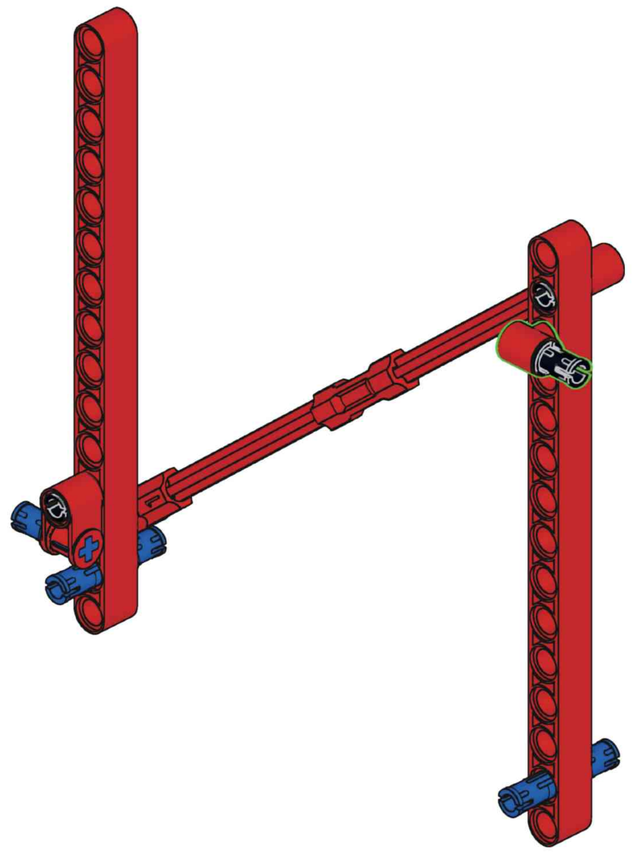

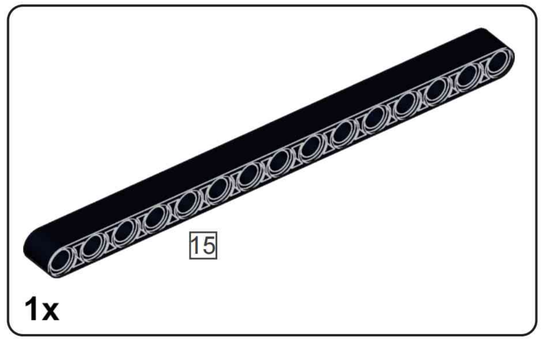

P14

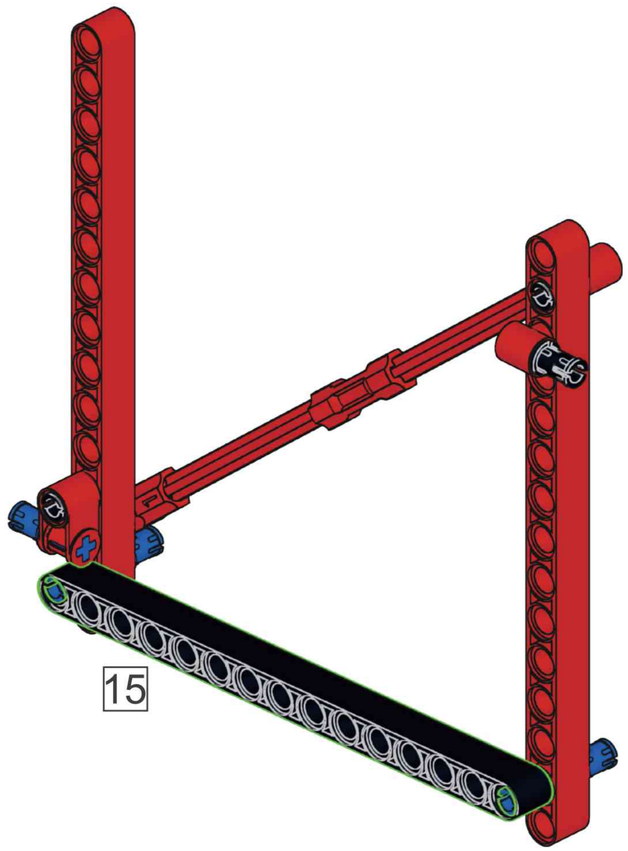

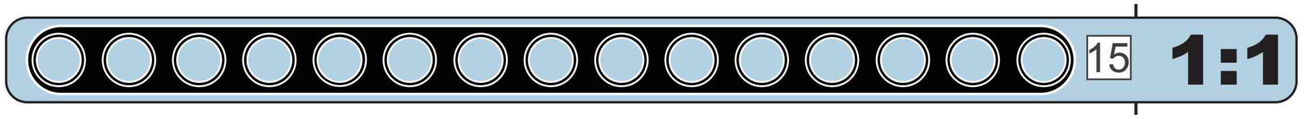

P15

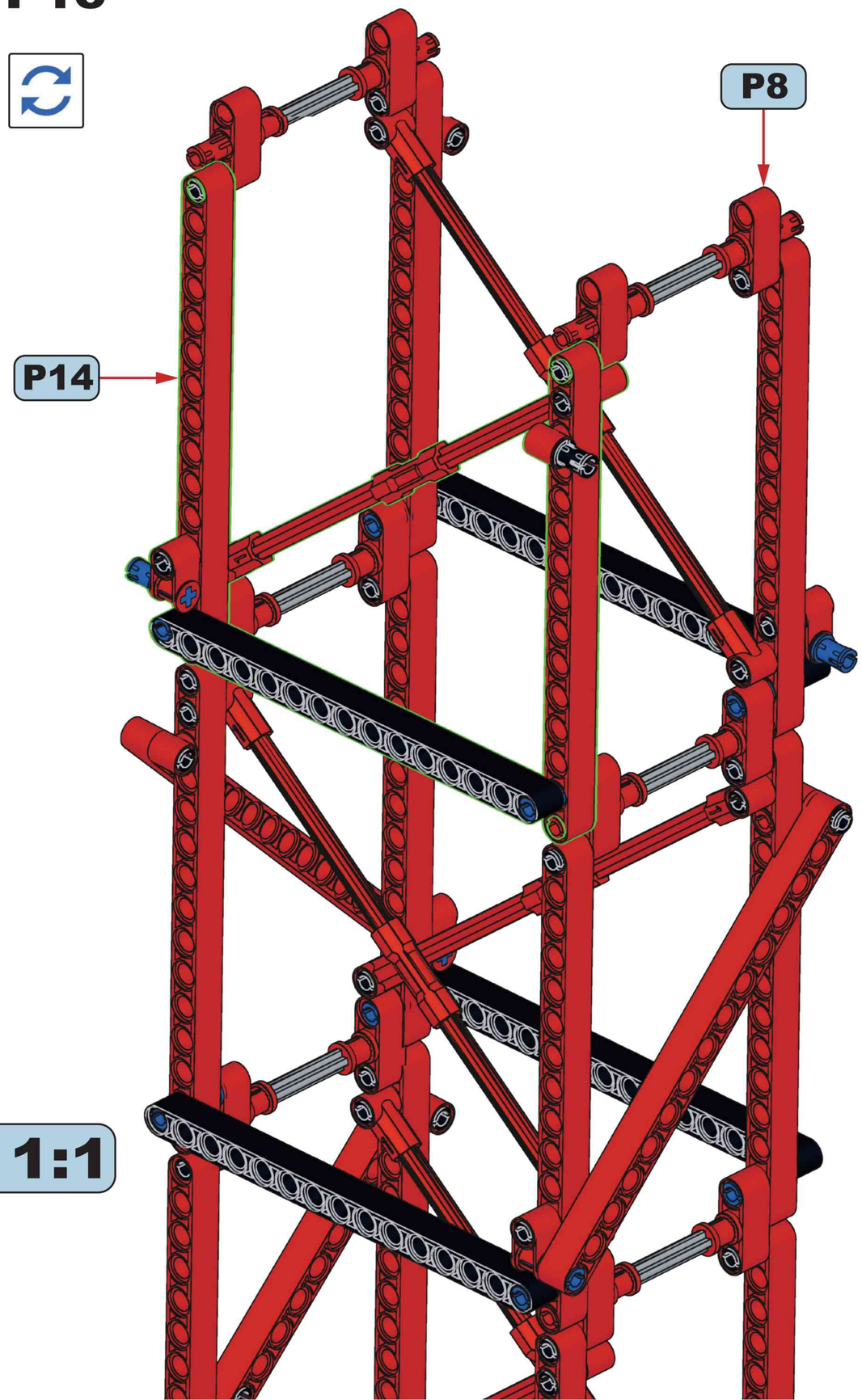

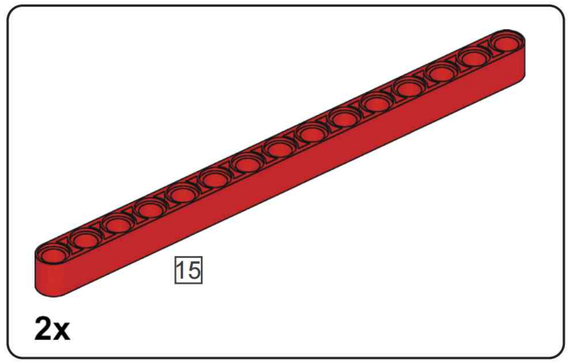

P16

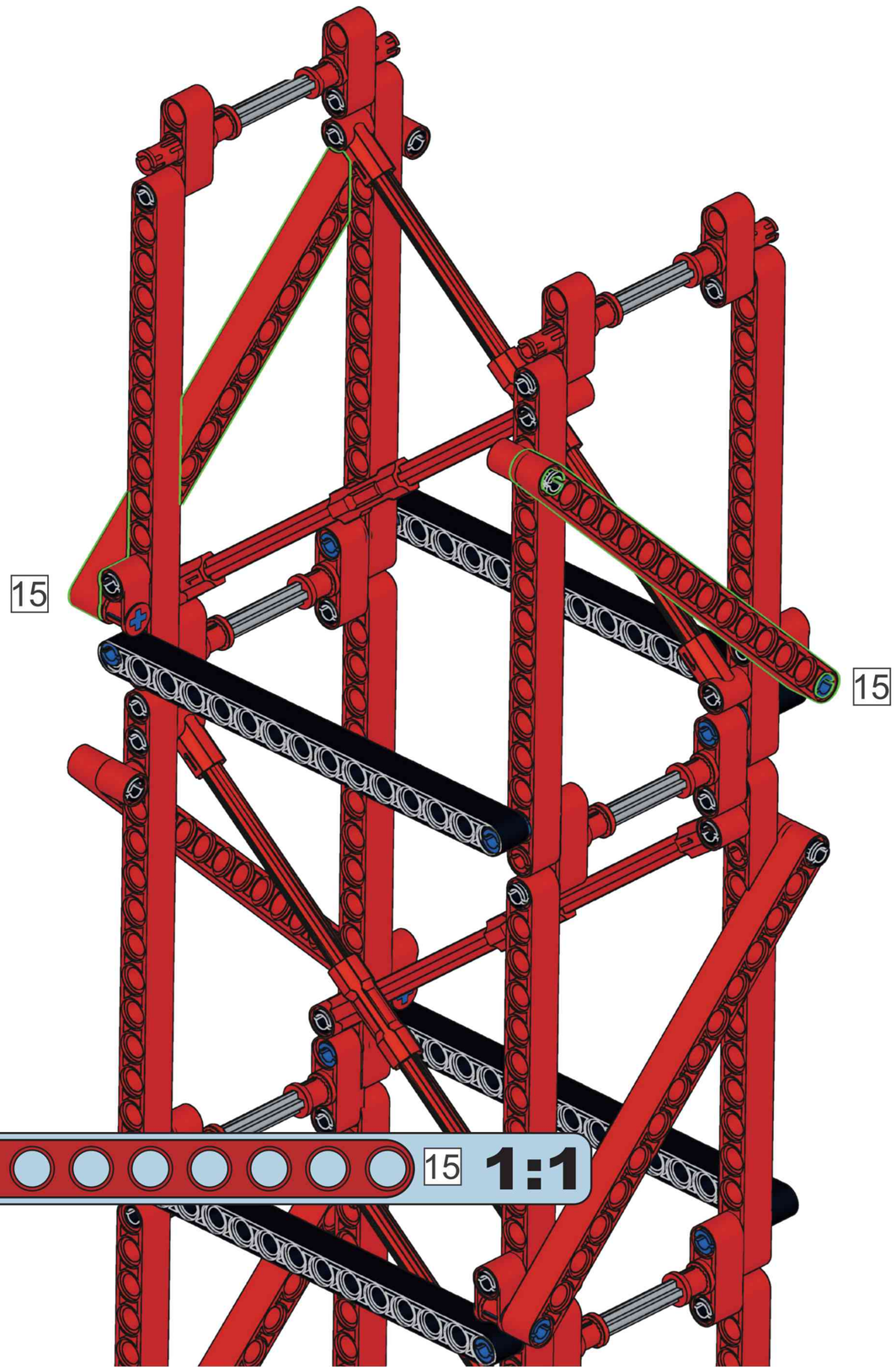

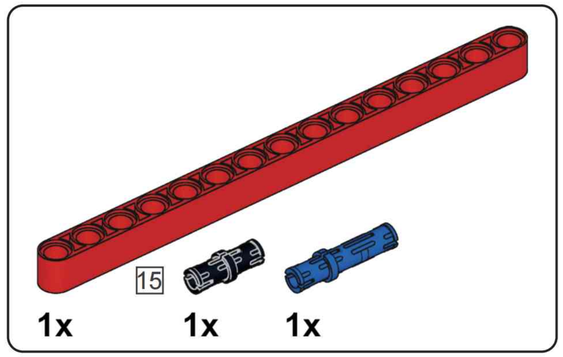

P17

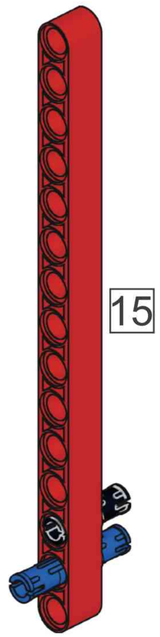

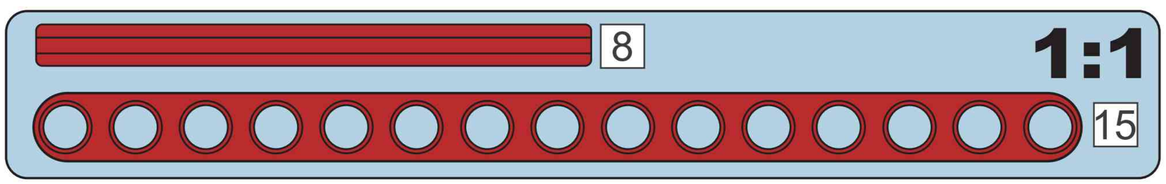

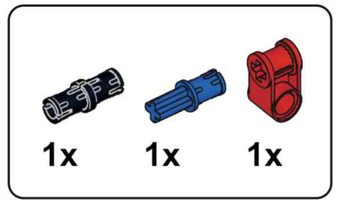

P18

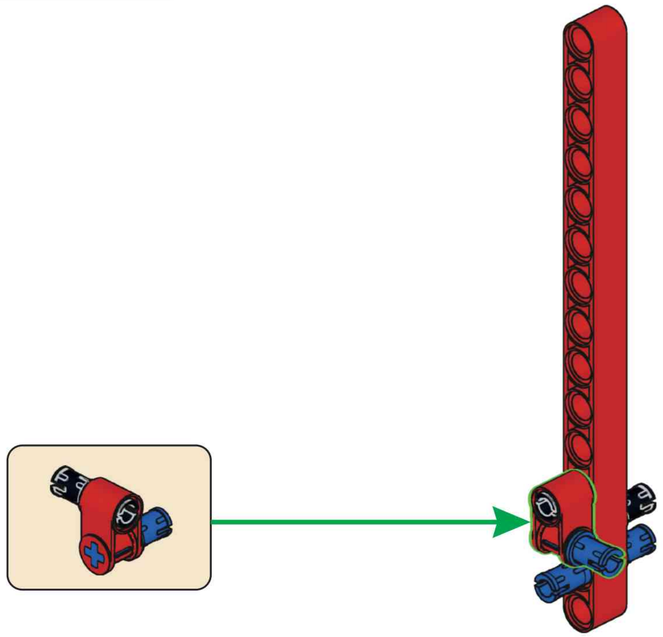

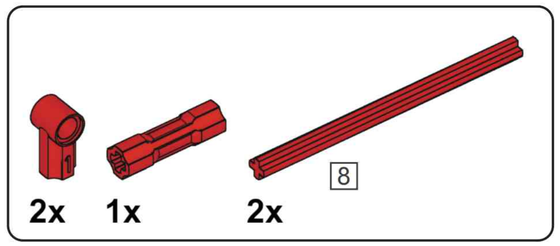

P19

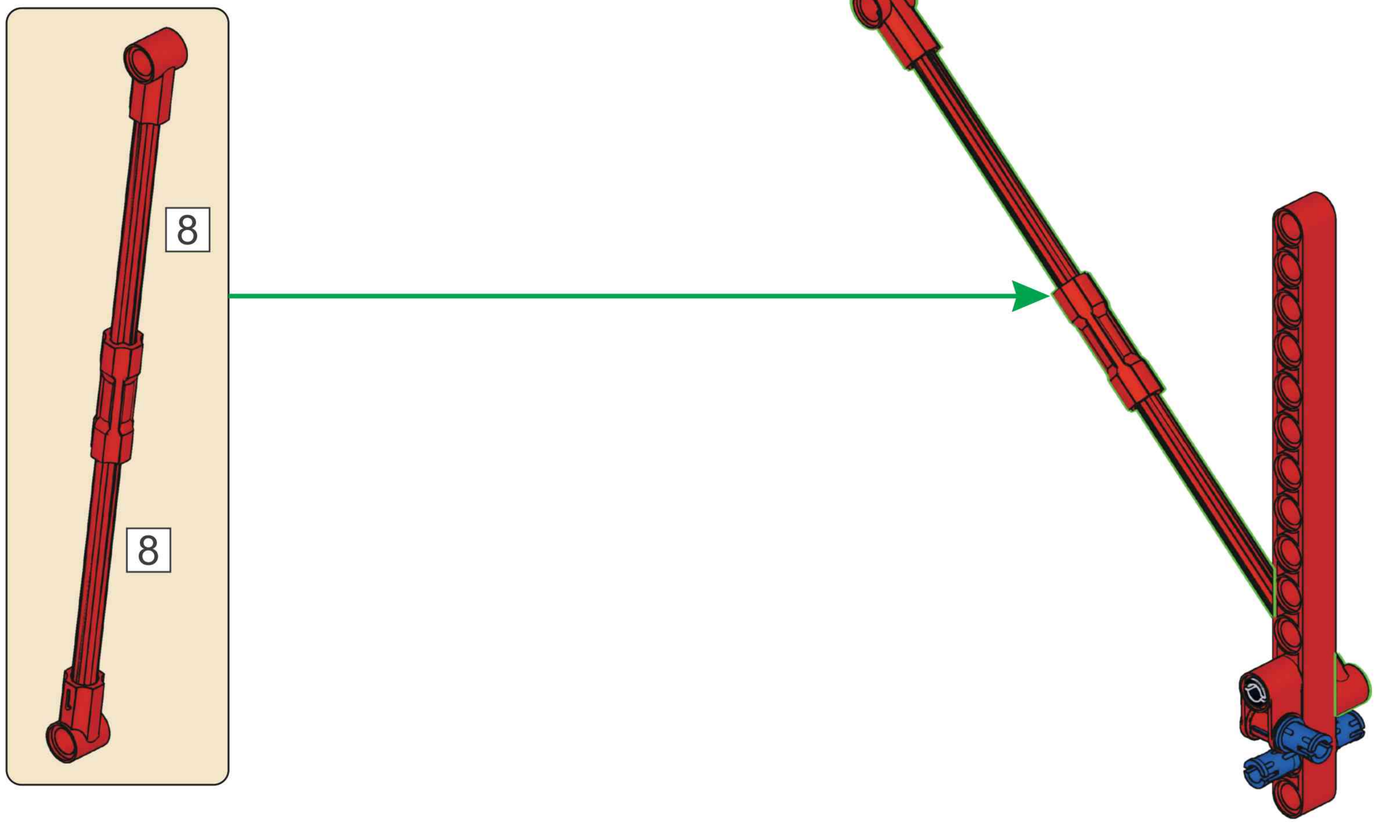

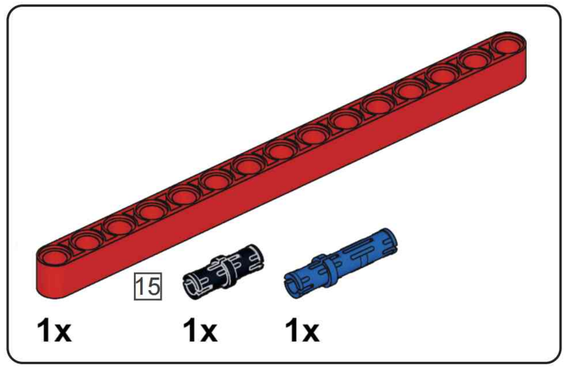

P20

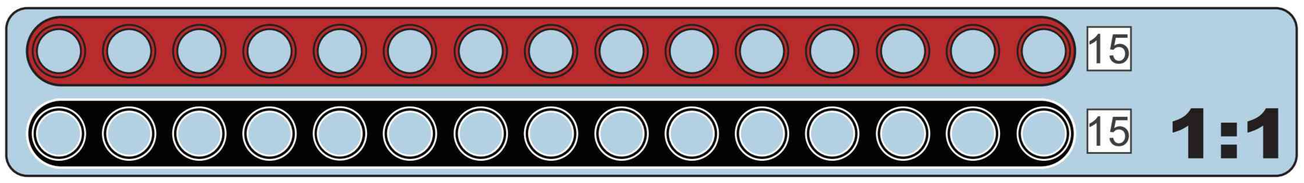

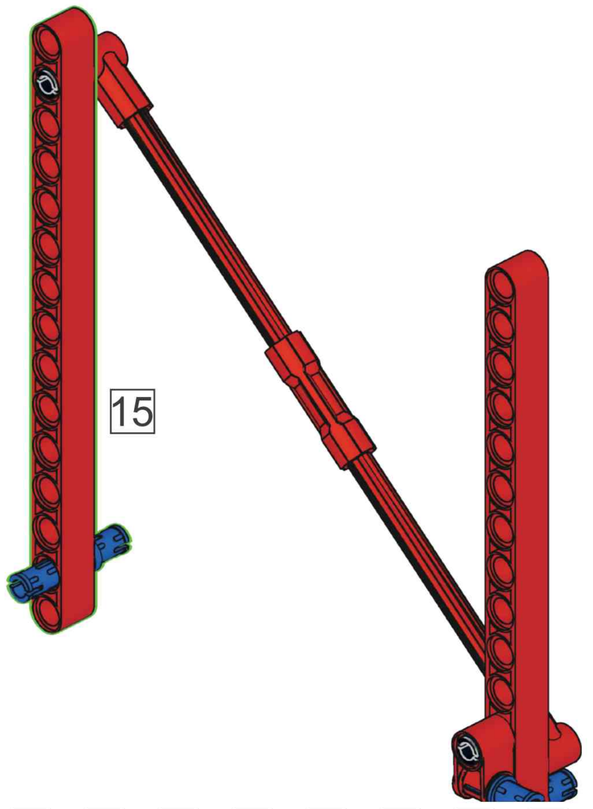

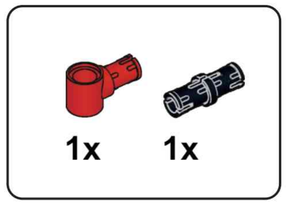

P21

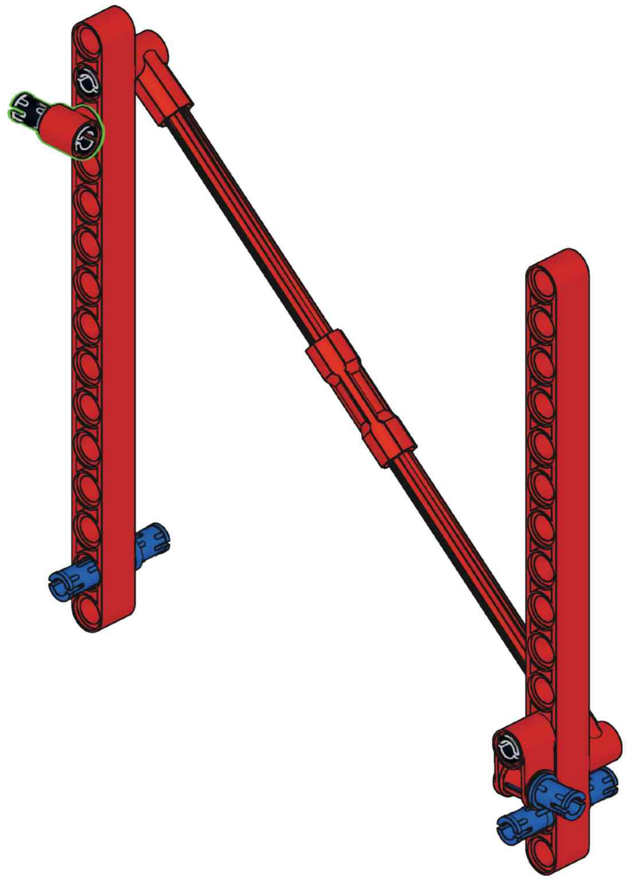

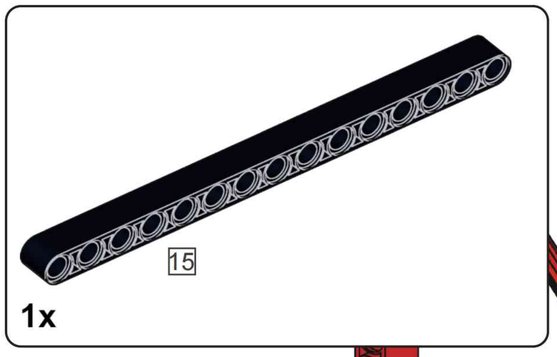

P22

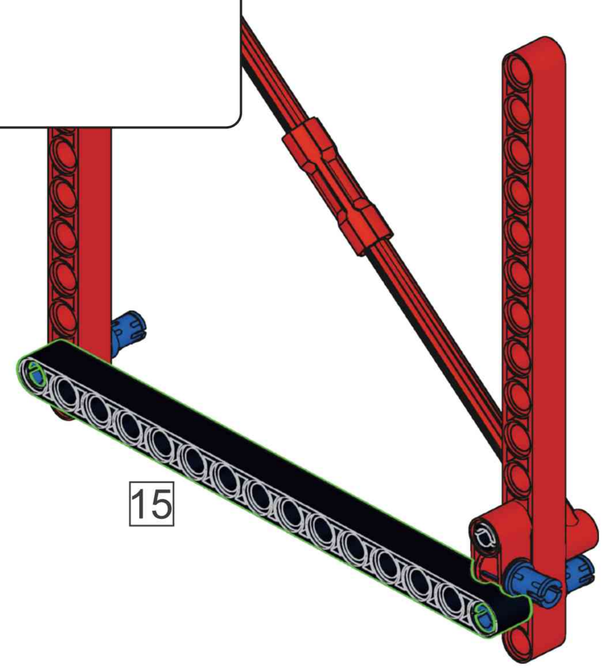

P23

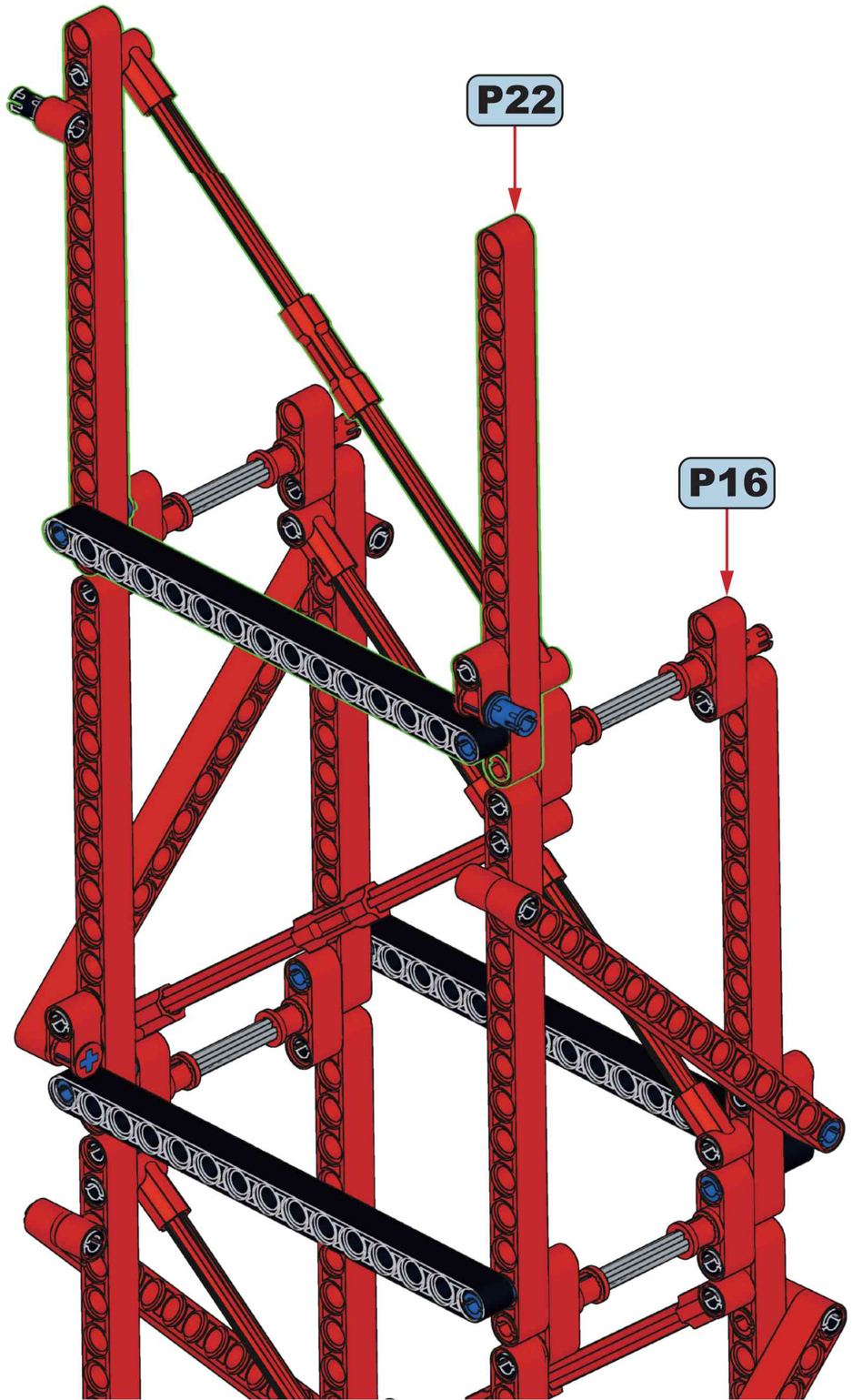

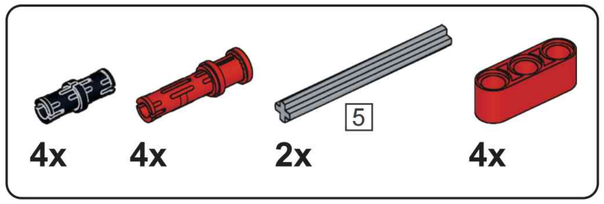

P24



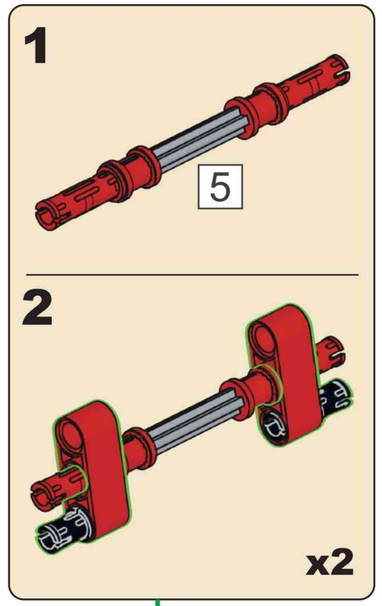

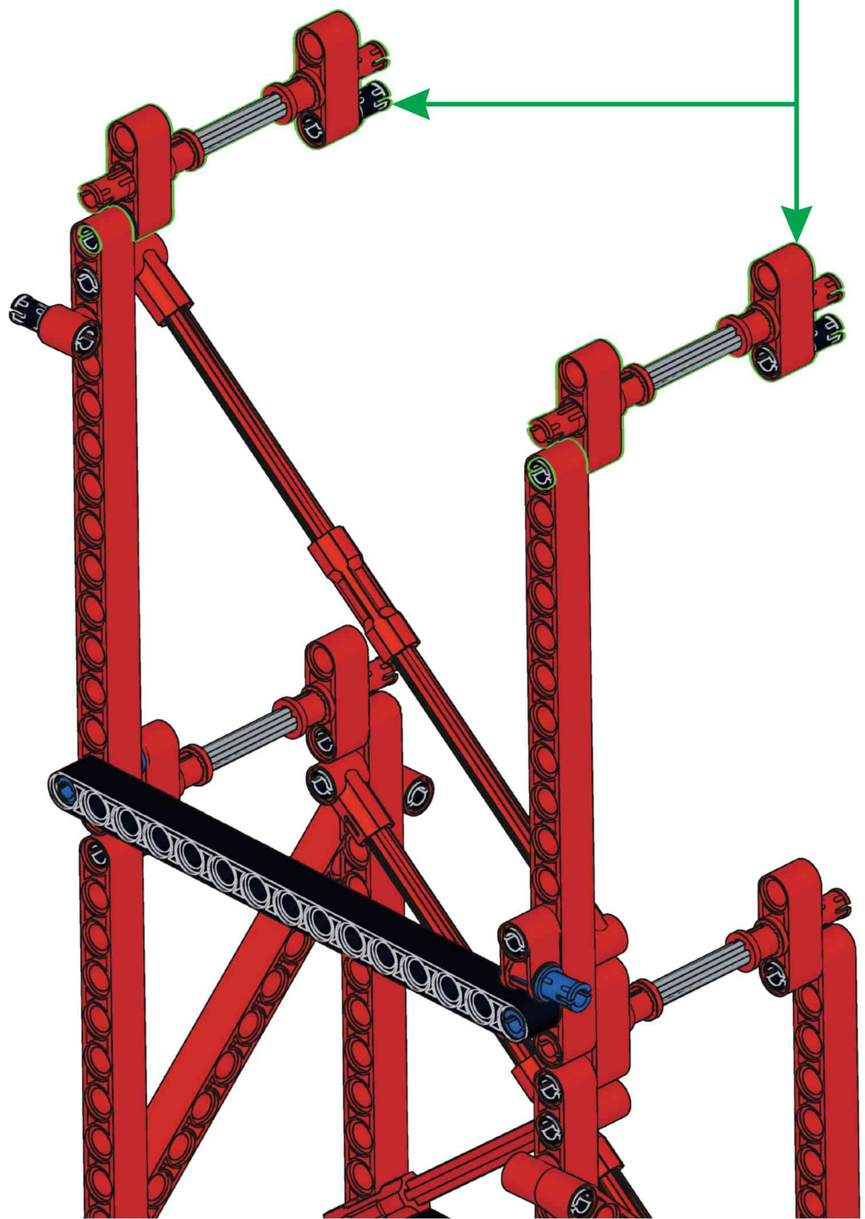

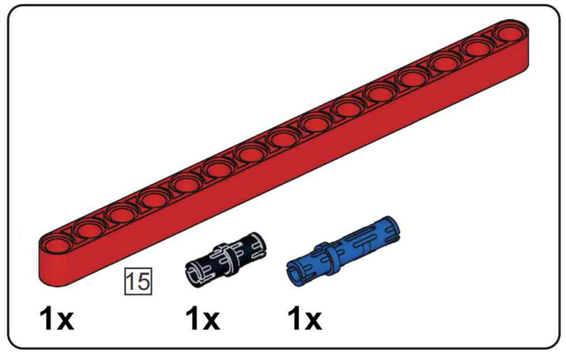

P25

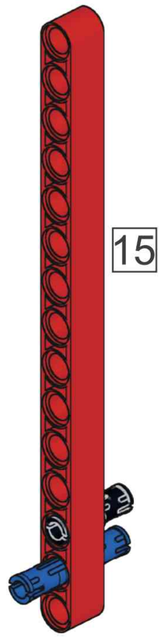

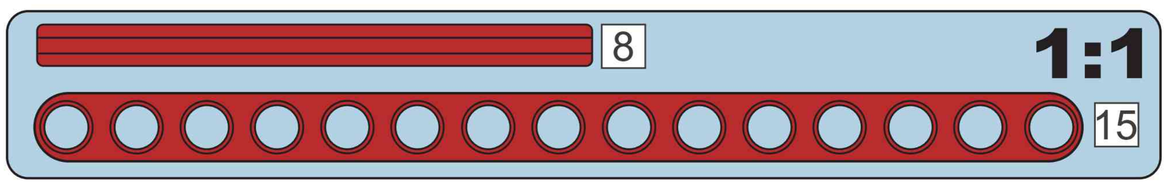

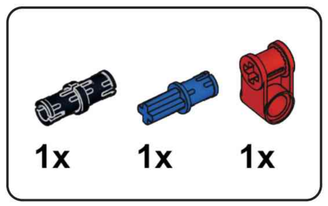

P26

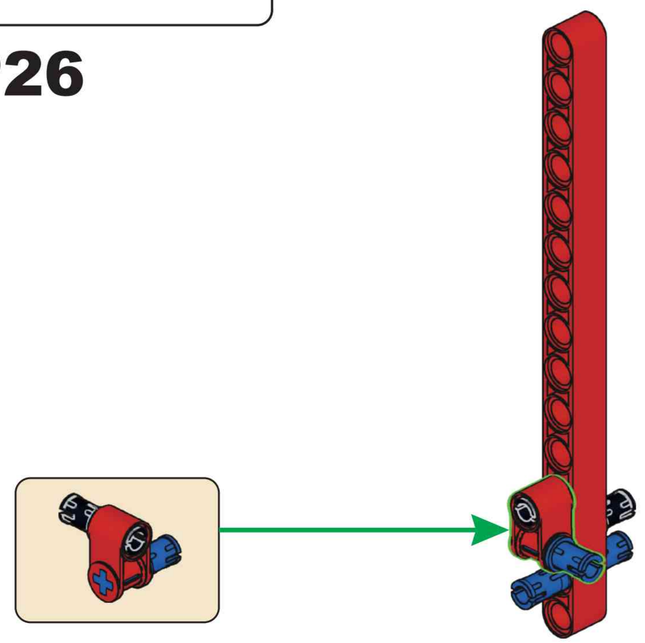

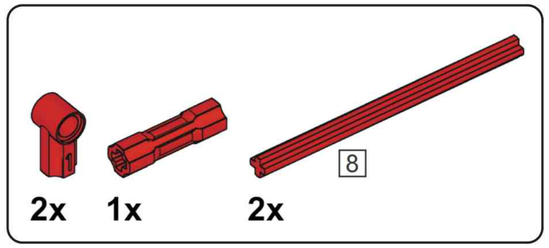

P27

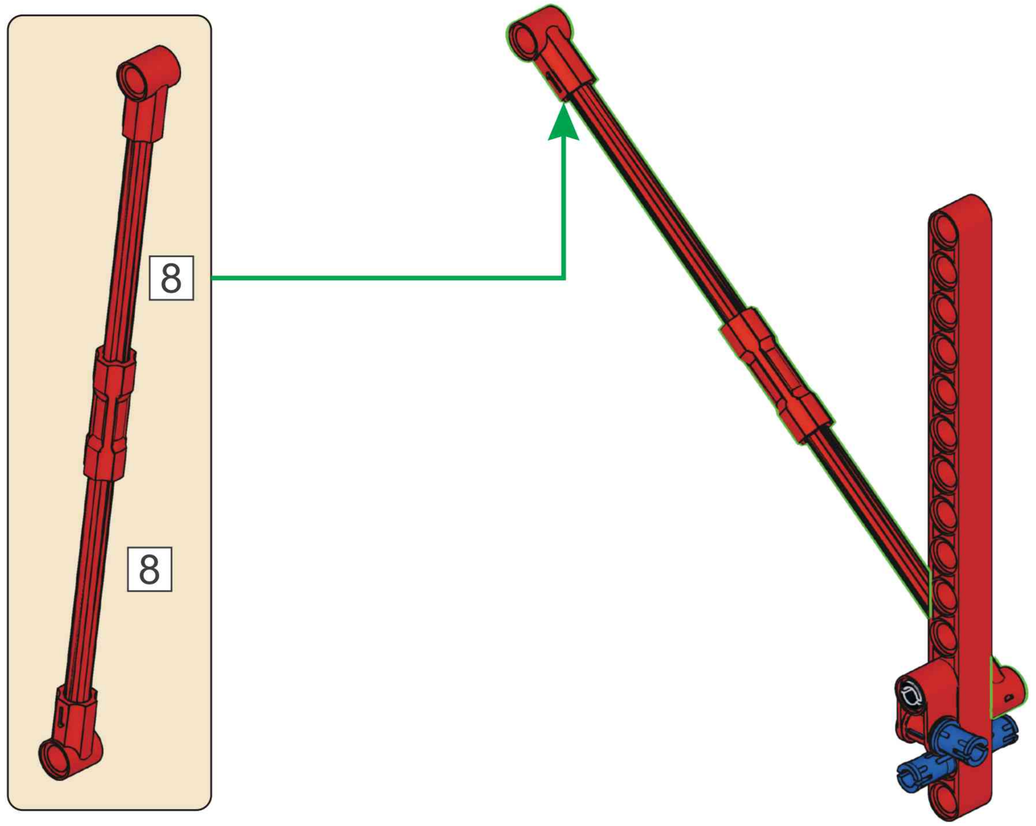

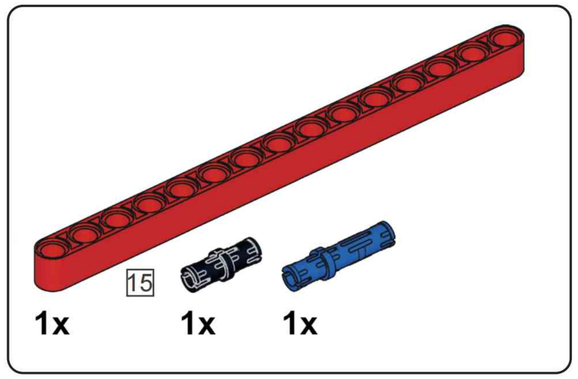

P28

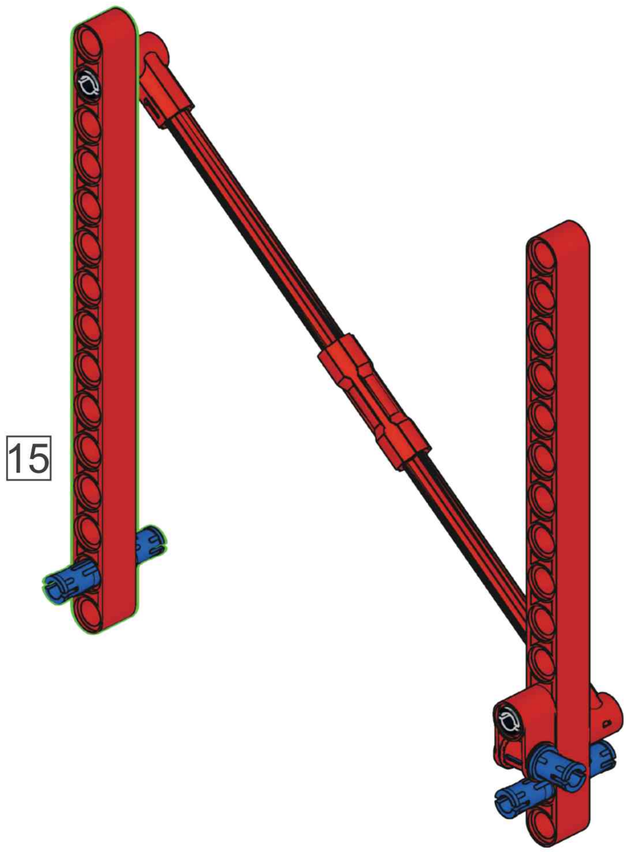

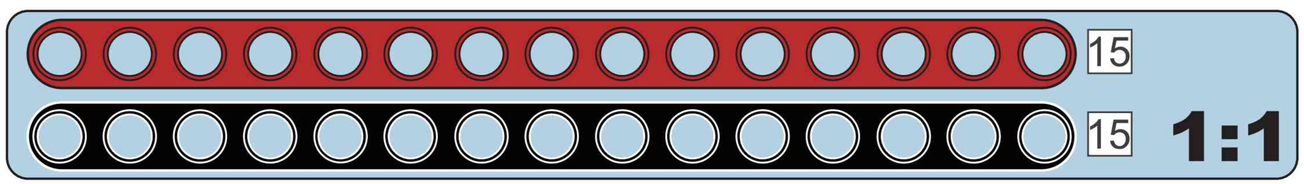

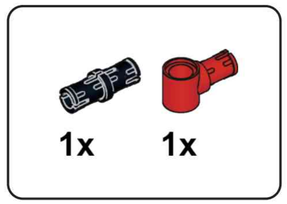

P29

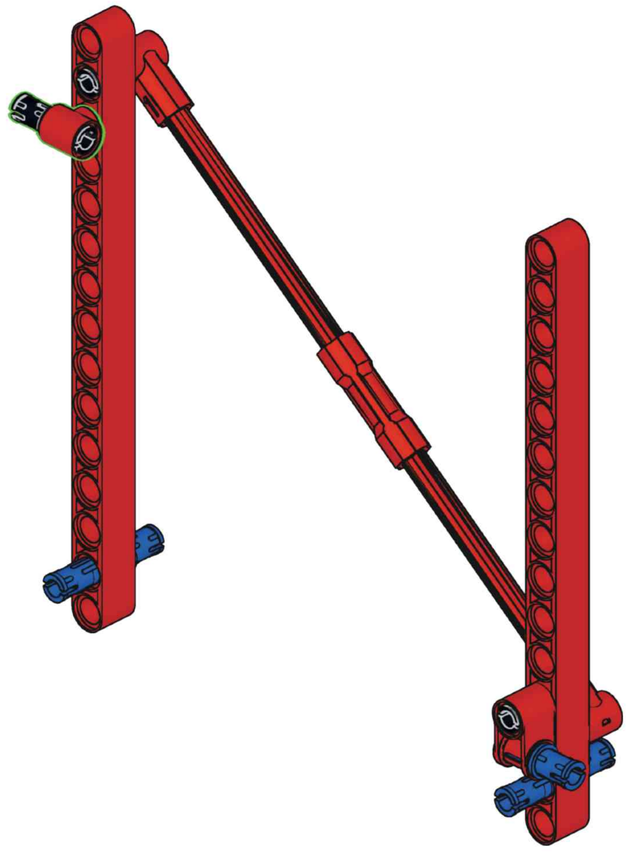

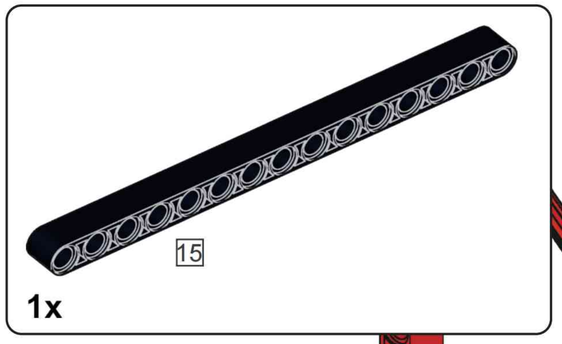

P30

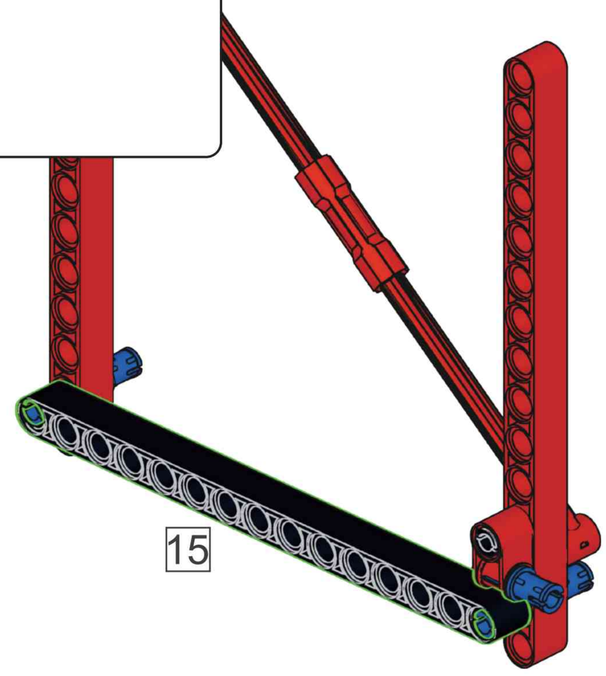

P31



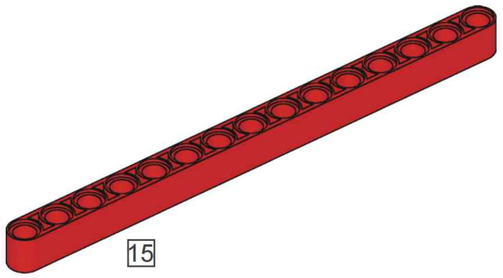

2x

P32

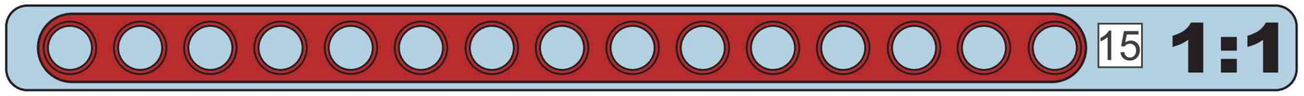

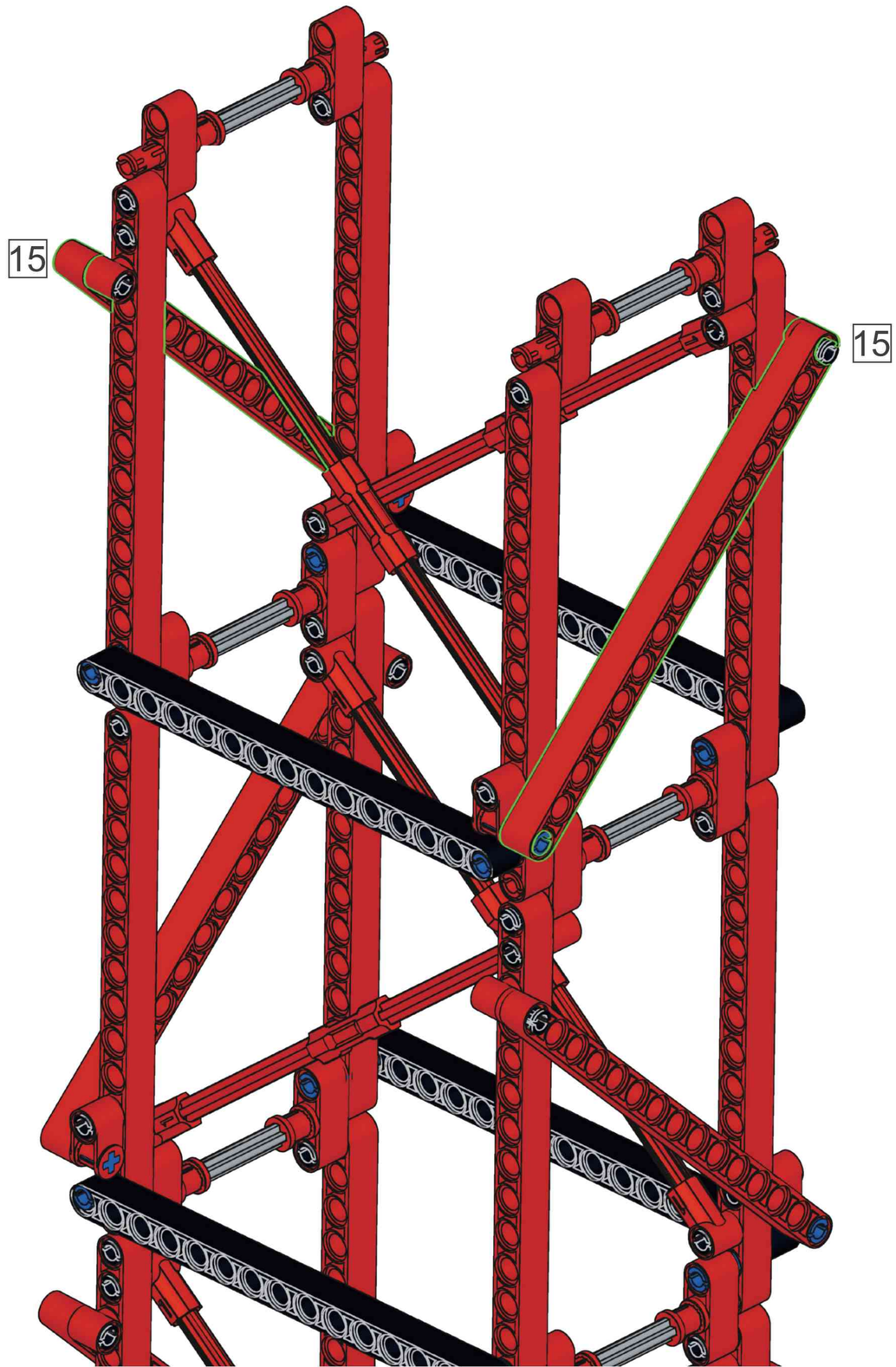

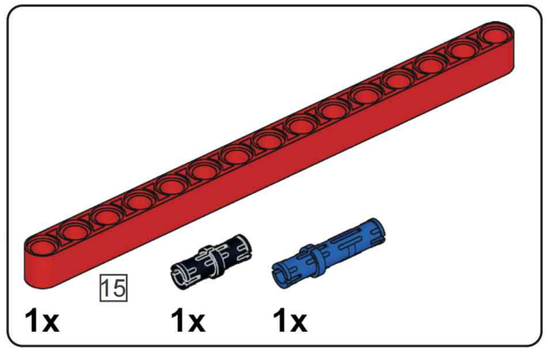

P33

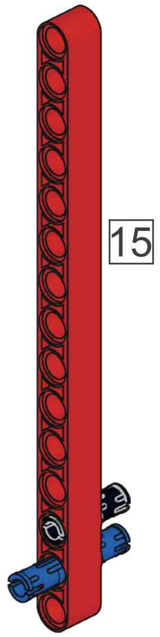

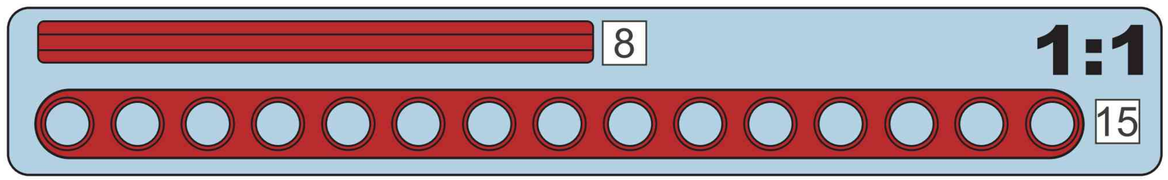

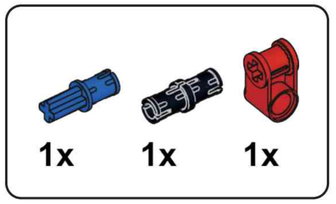

P34

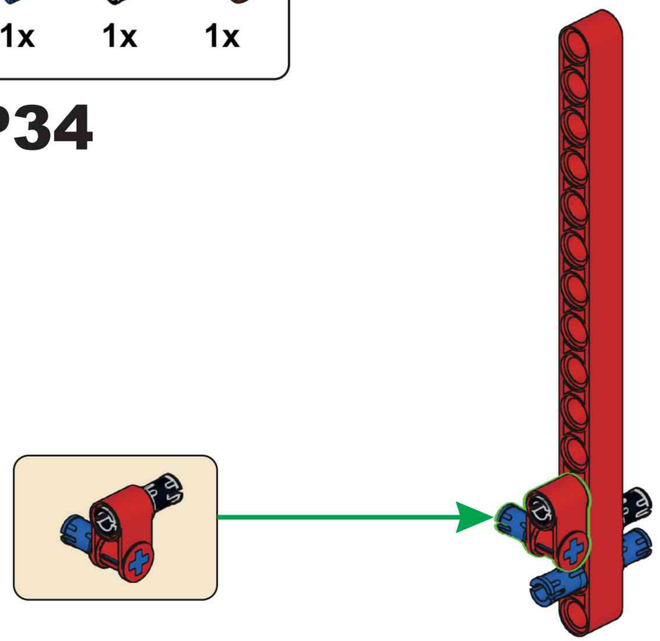

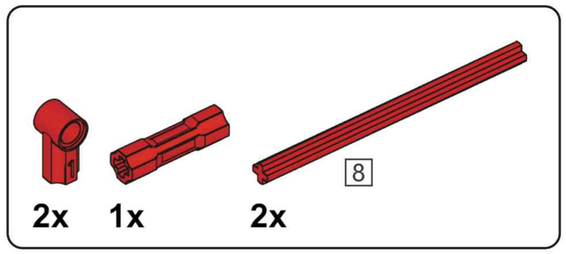

P35

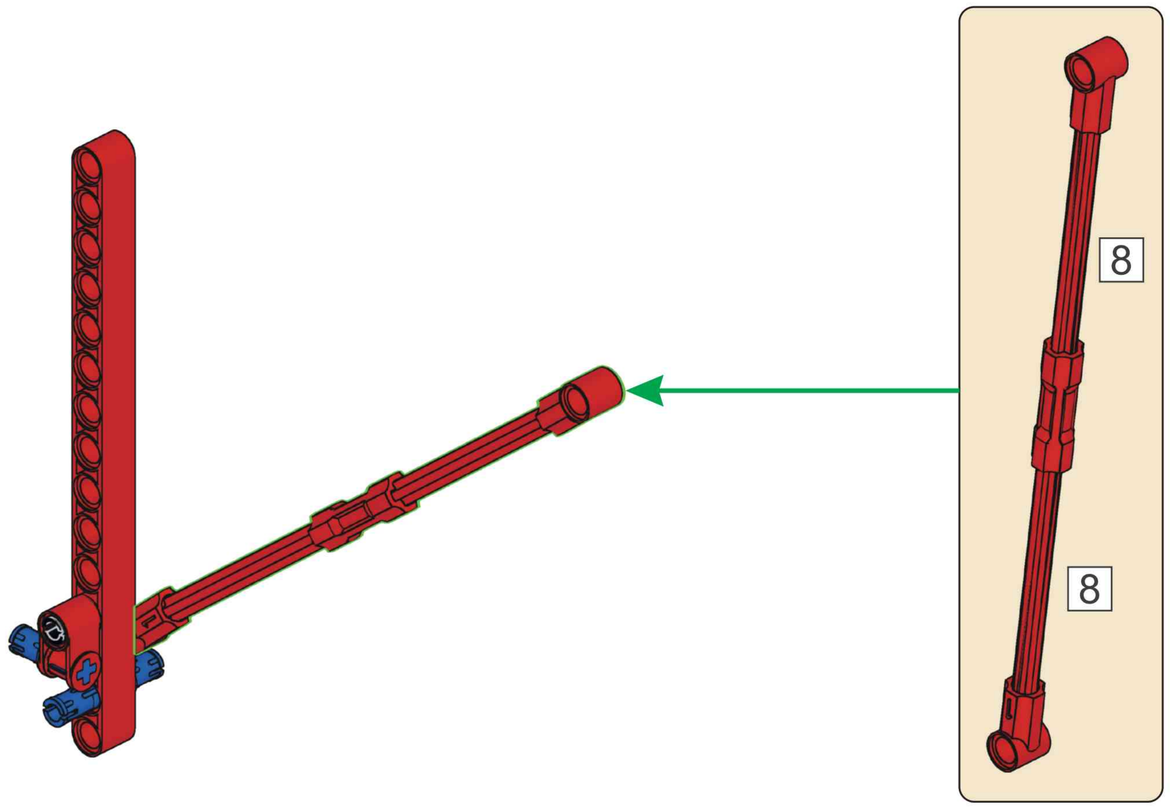

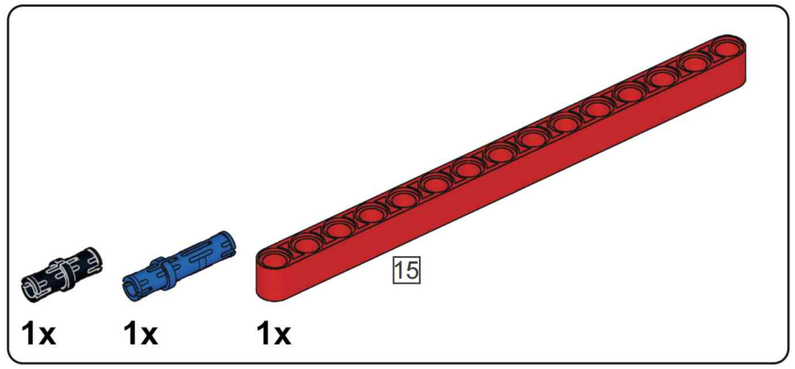

P36

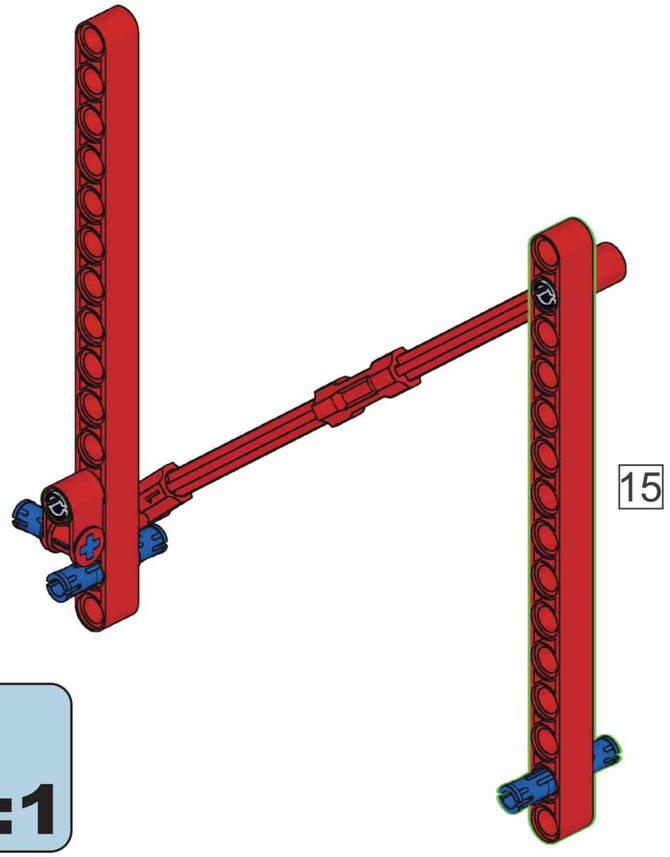

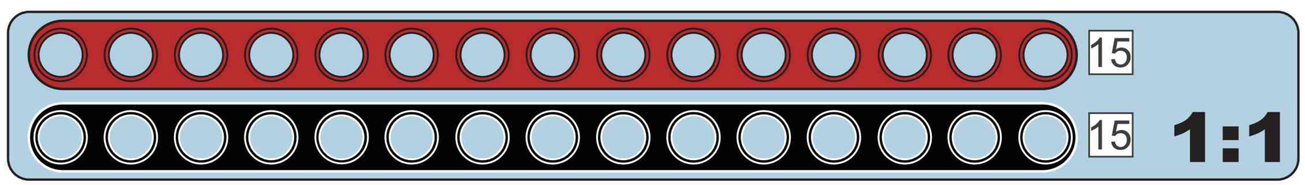

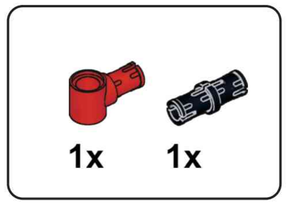

P37

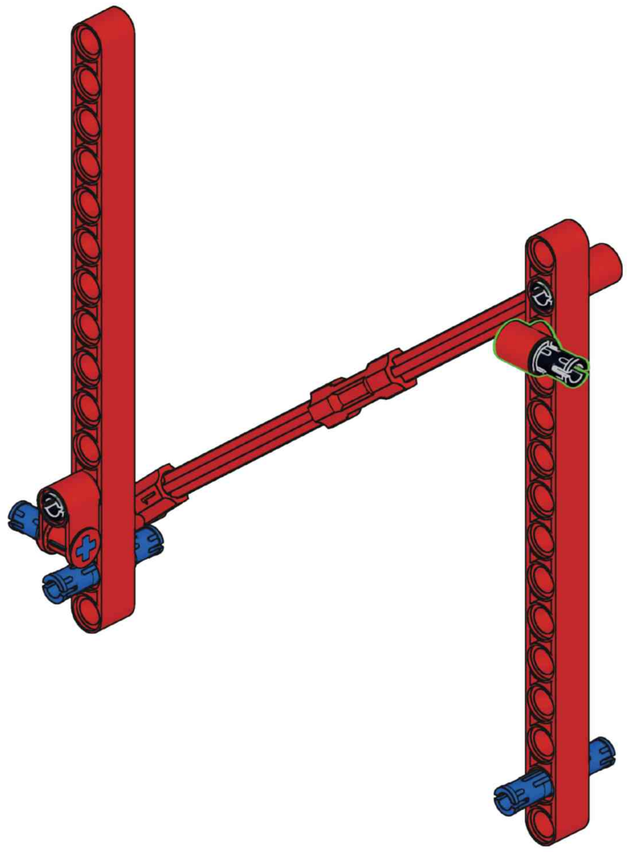

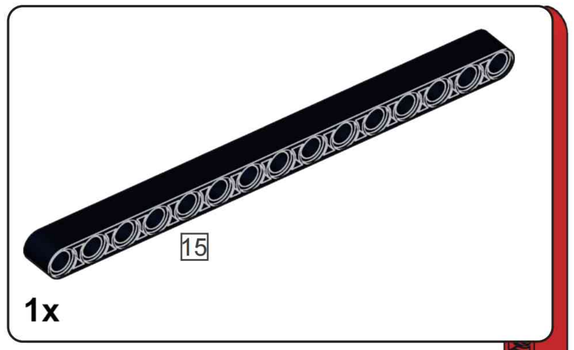

P38

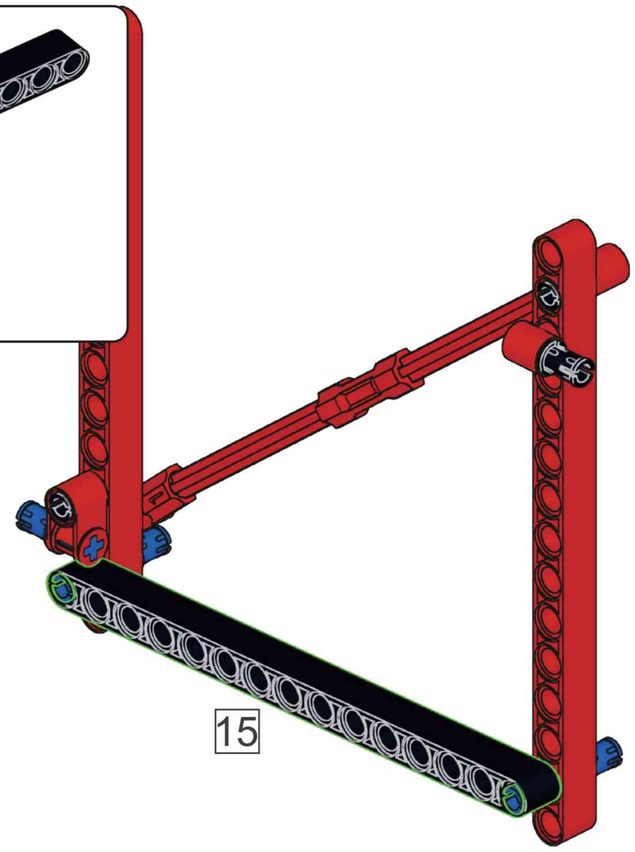

P39

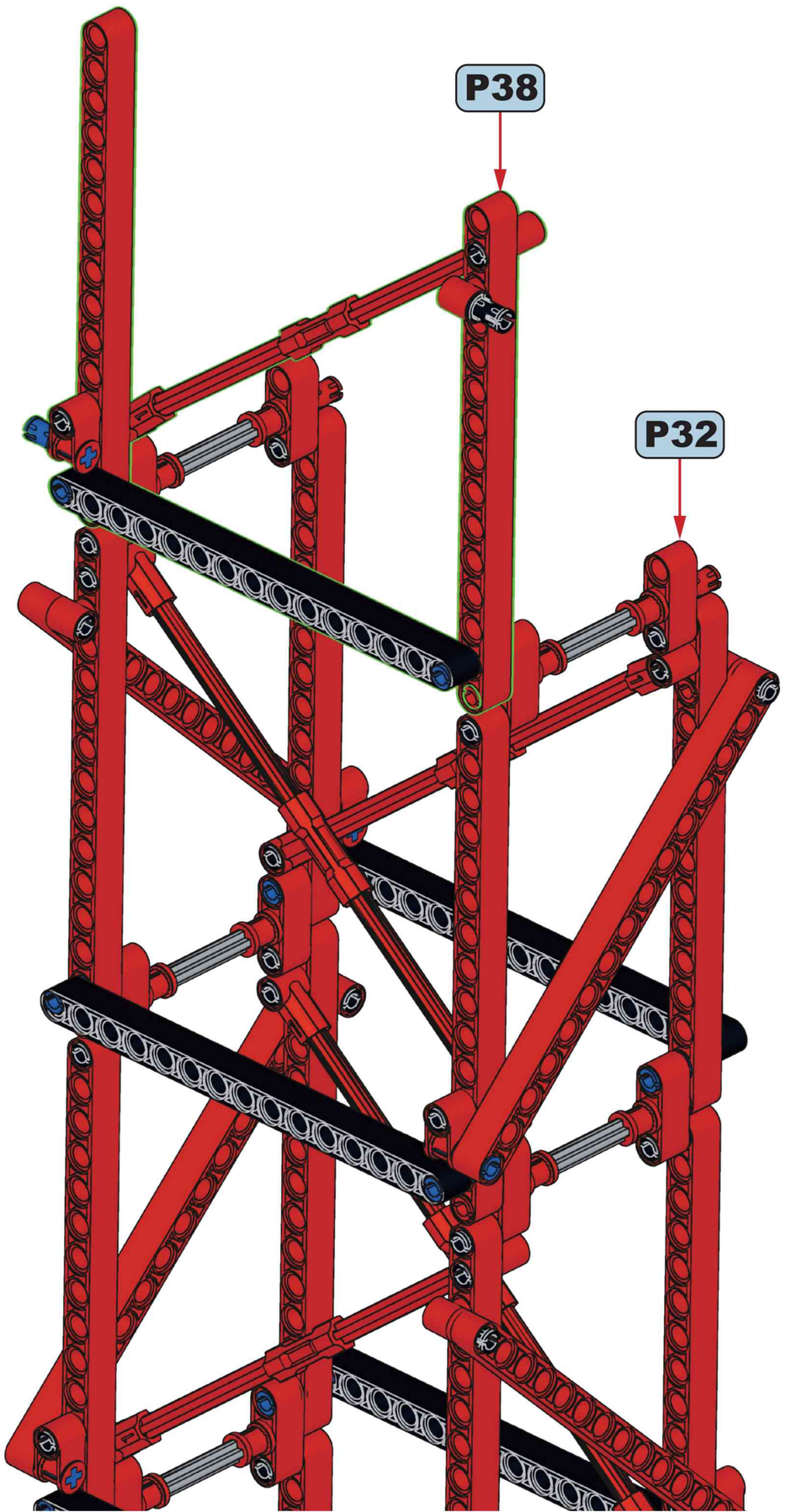

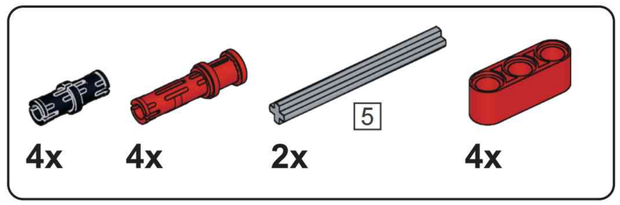

P40

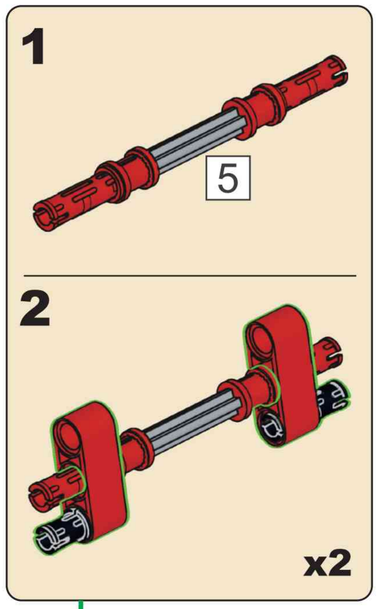

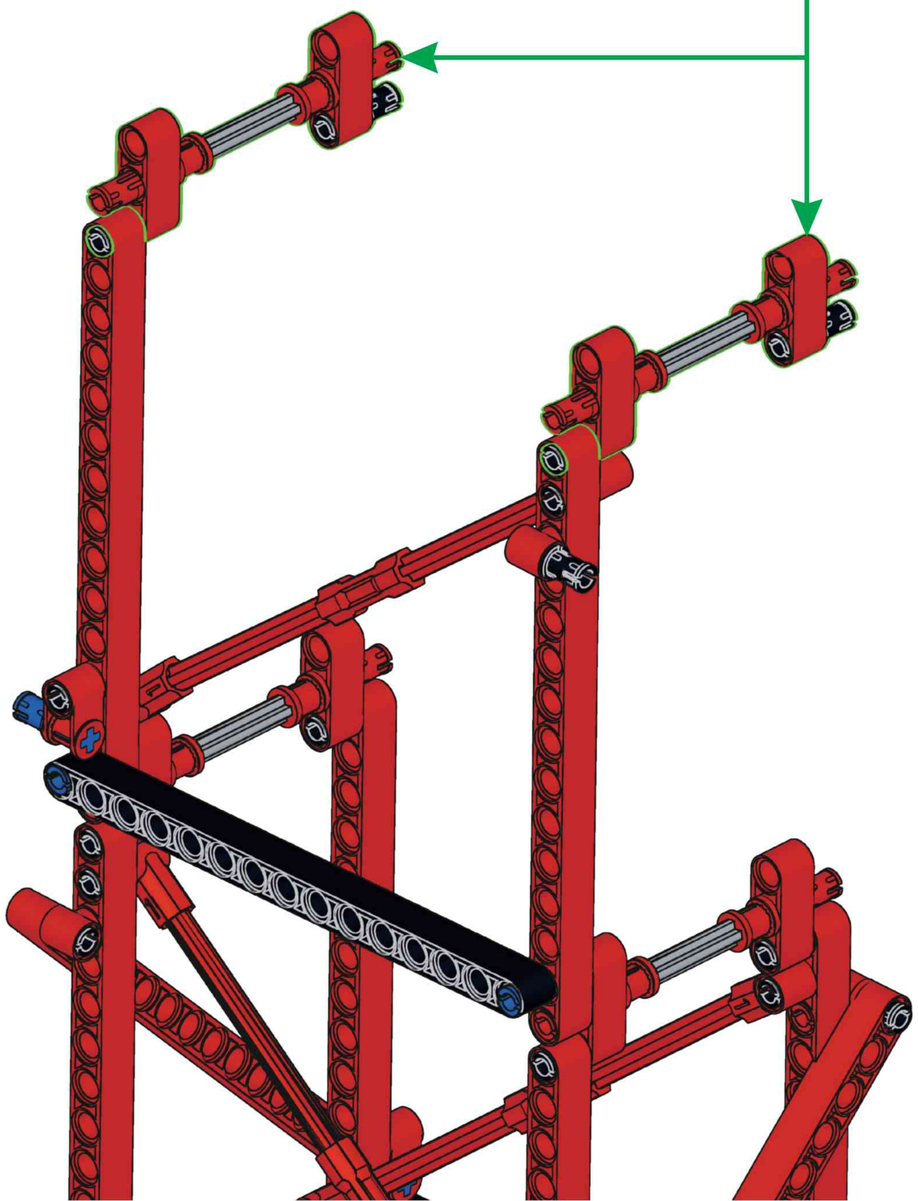

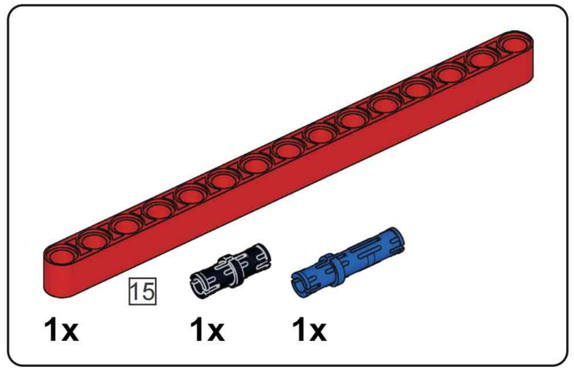

P41

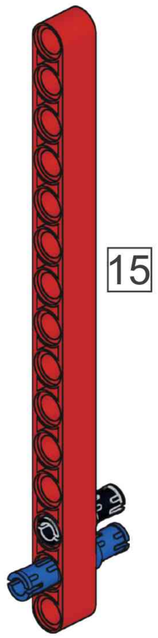

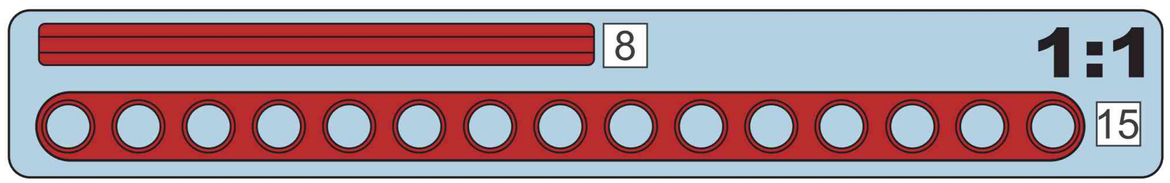

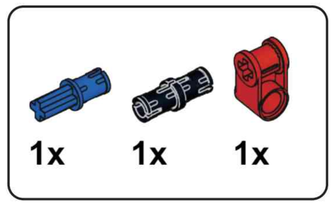

P42

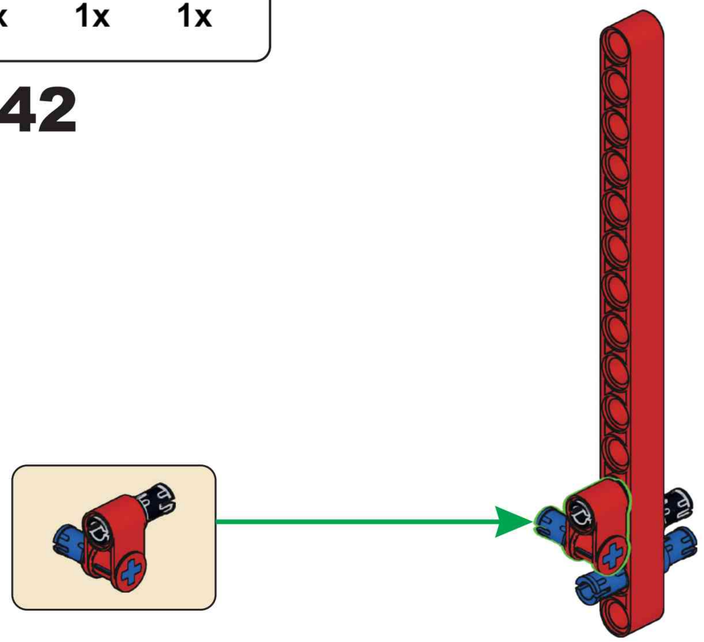

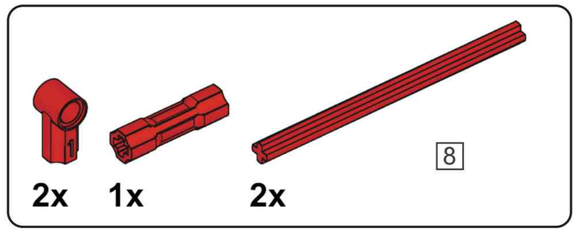

P43

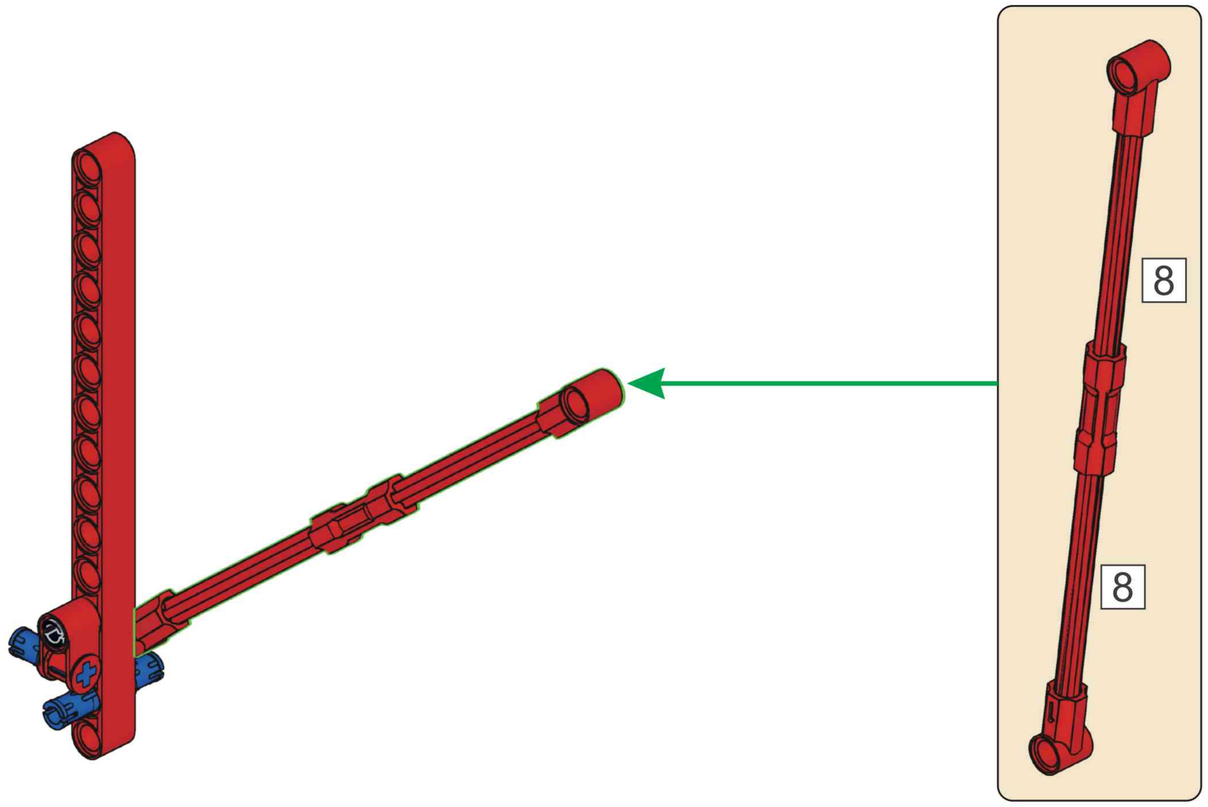

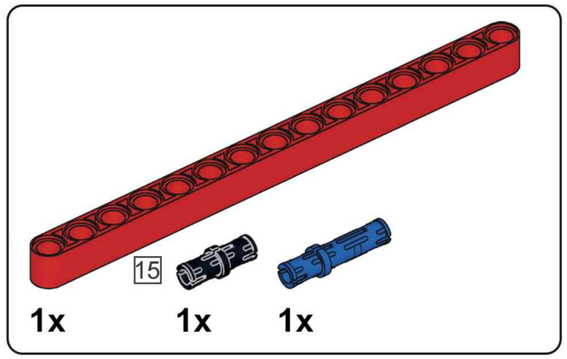

P44

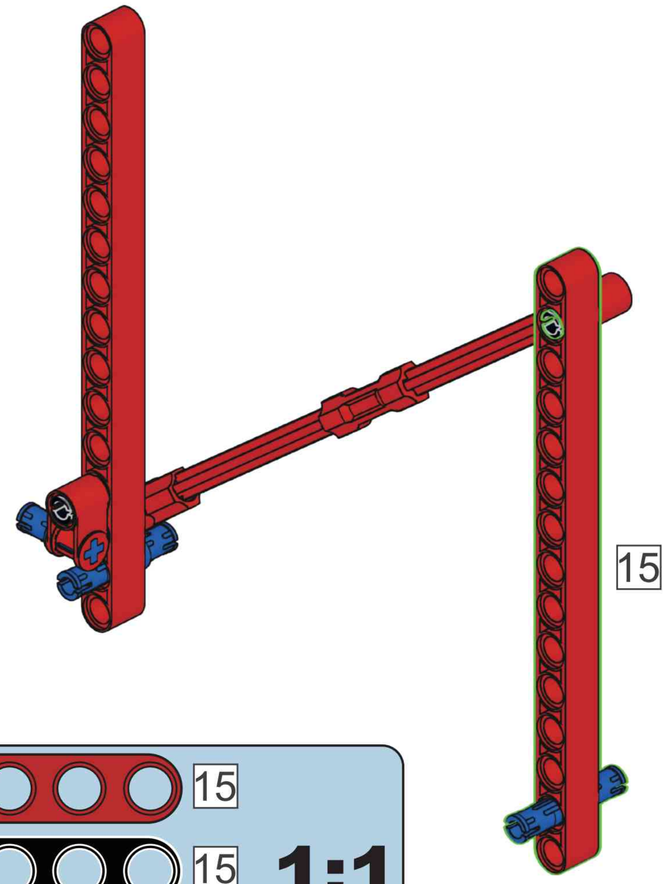

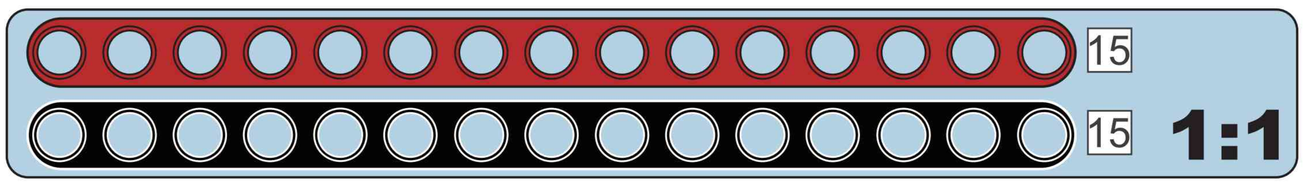

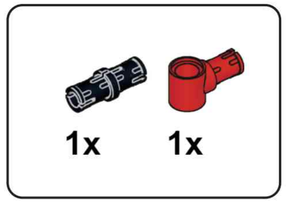

P45

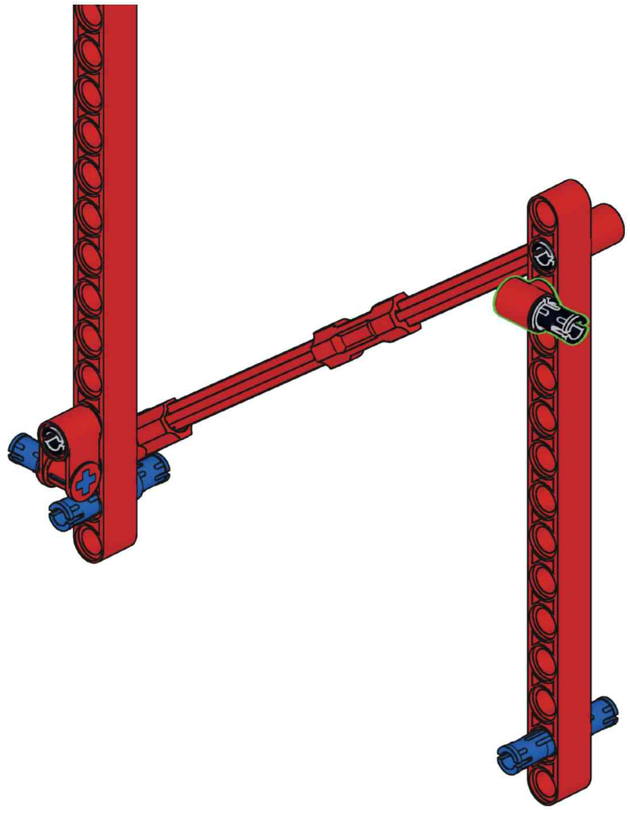

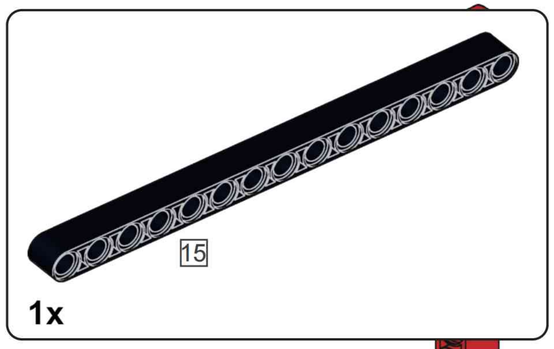

P46

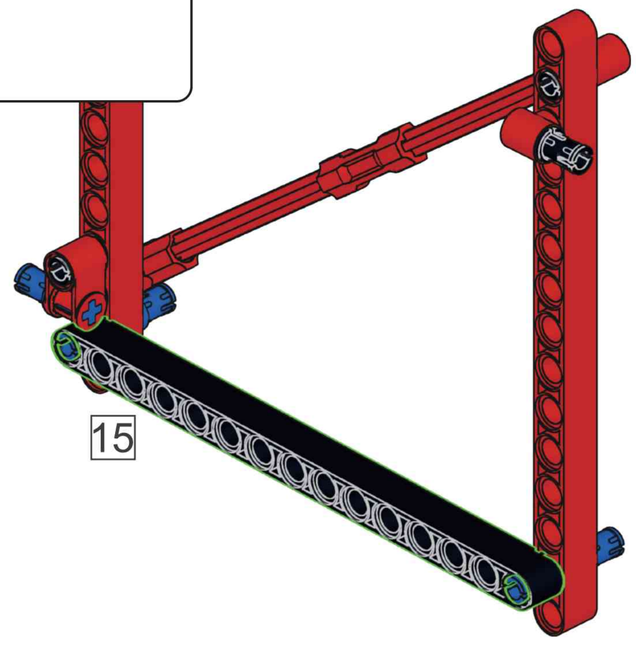

P47

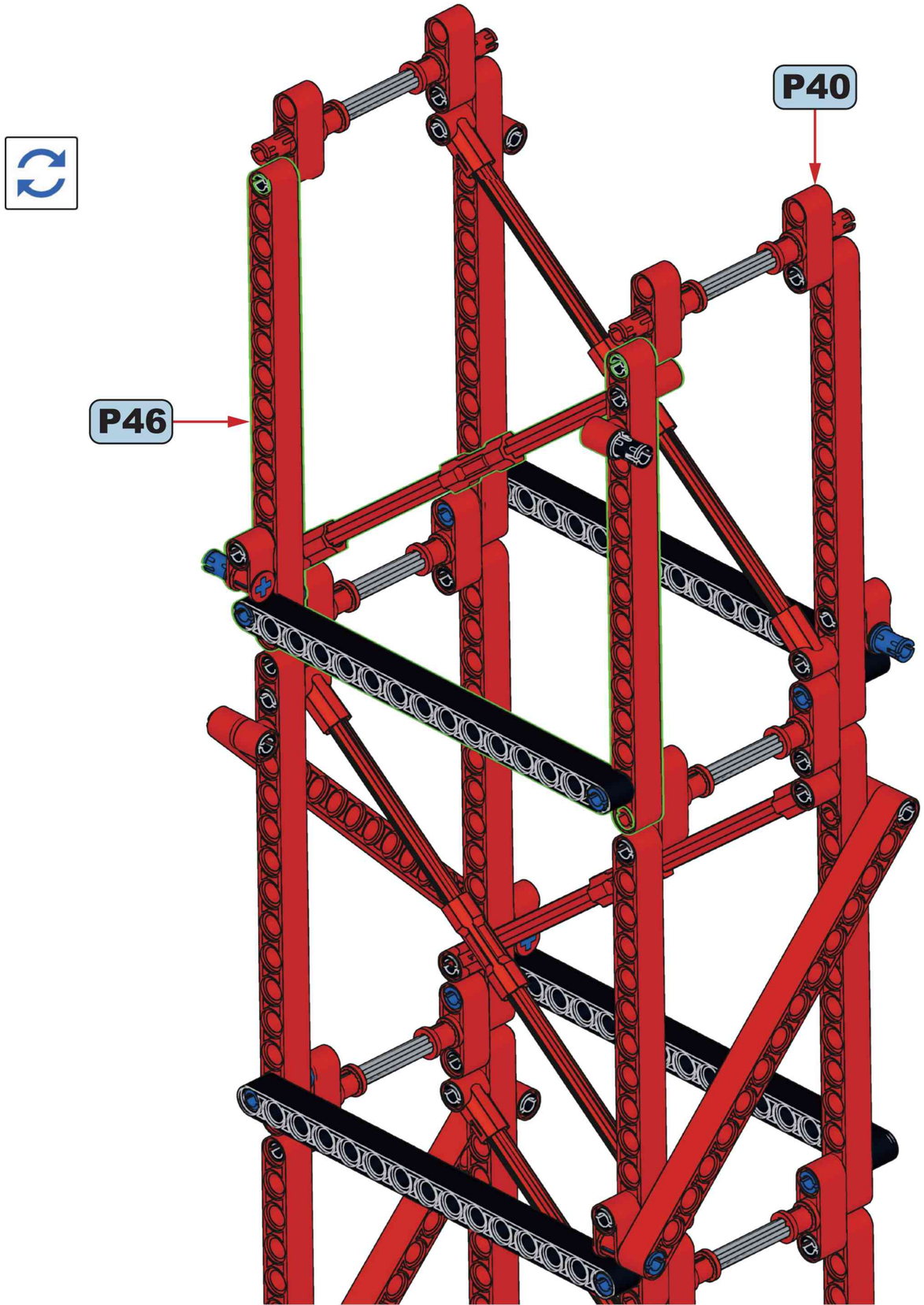

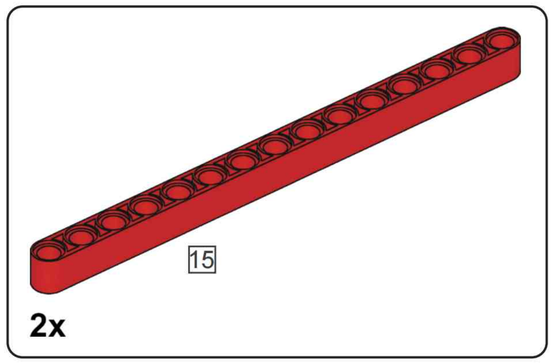

P48

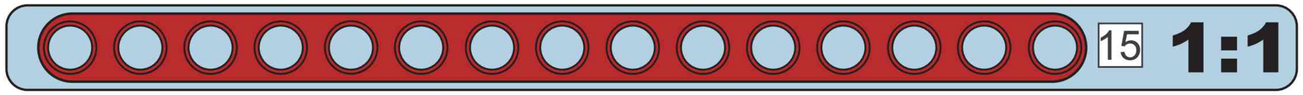

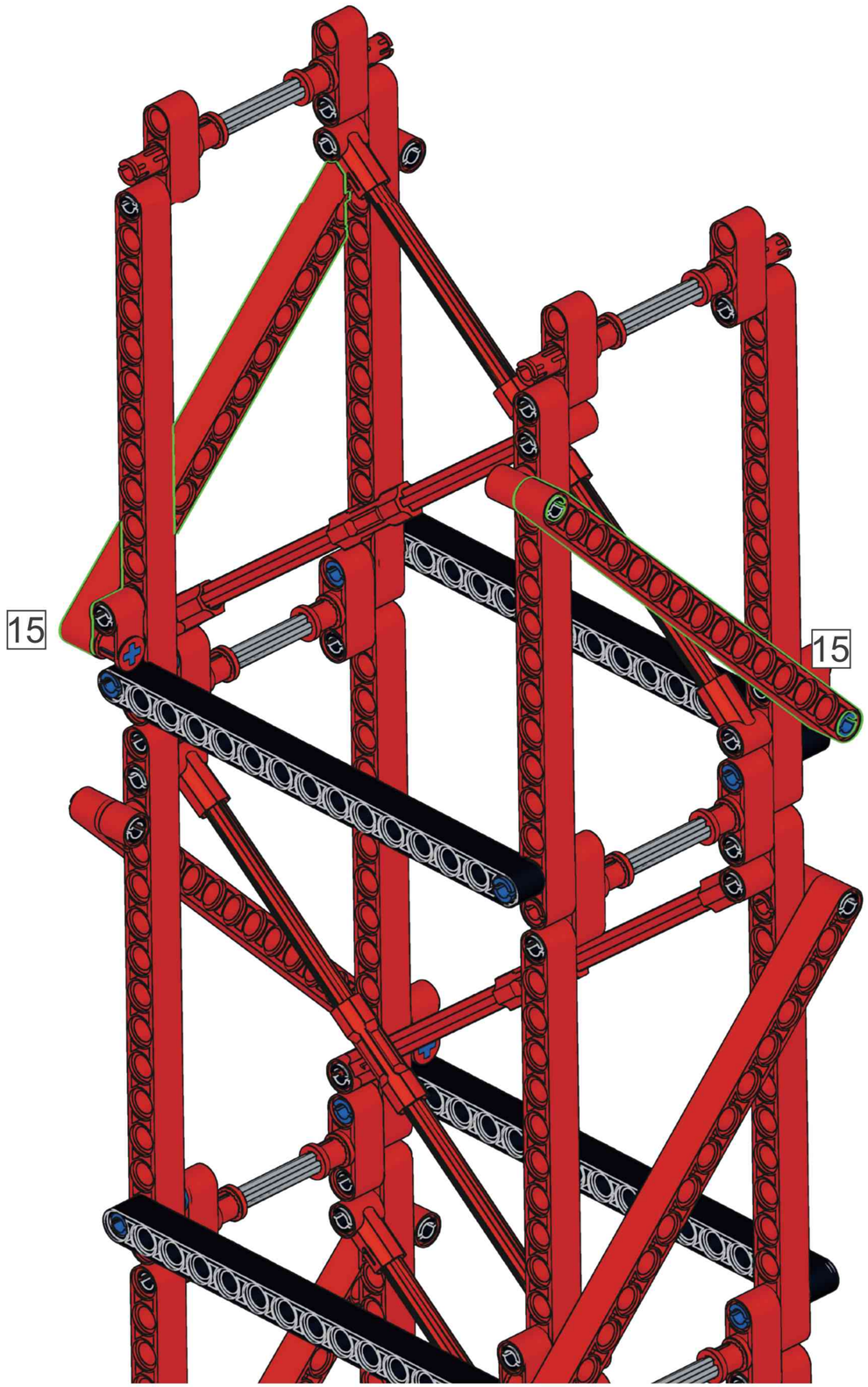

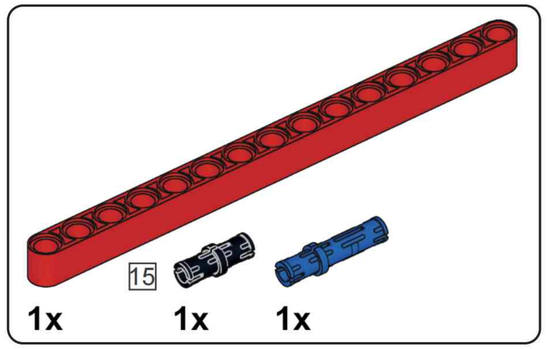

P49

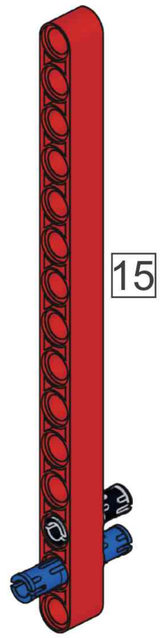

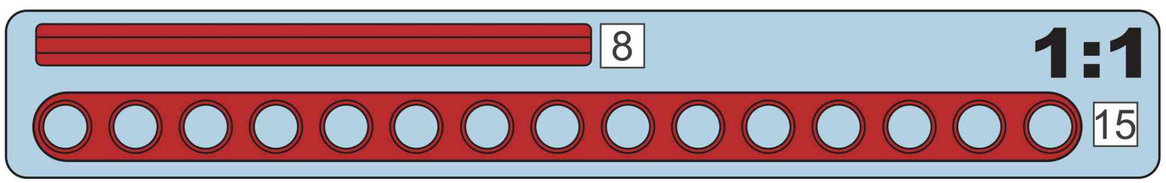

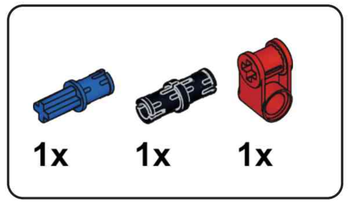

P50

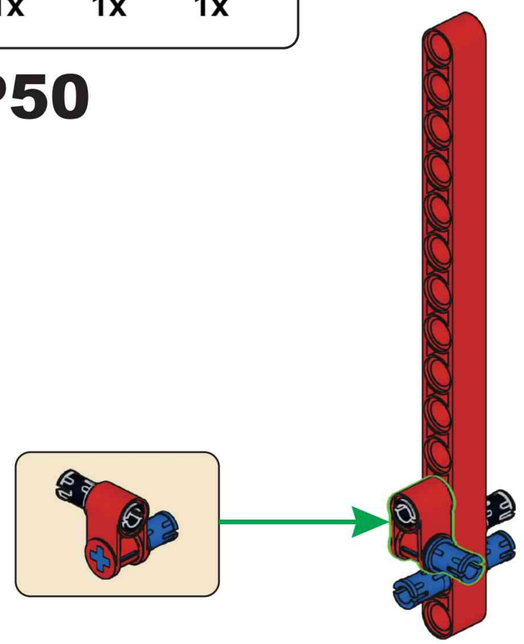

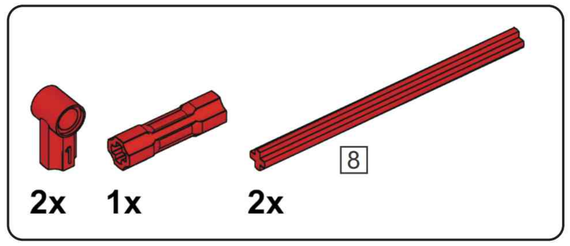

P51

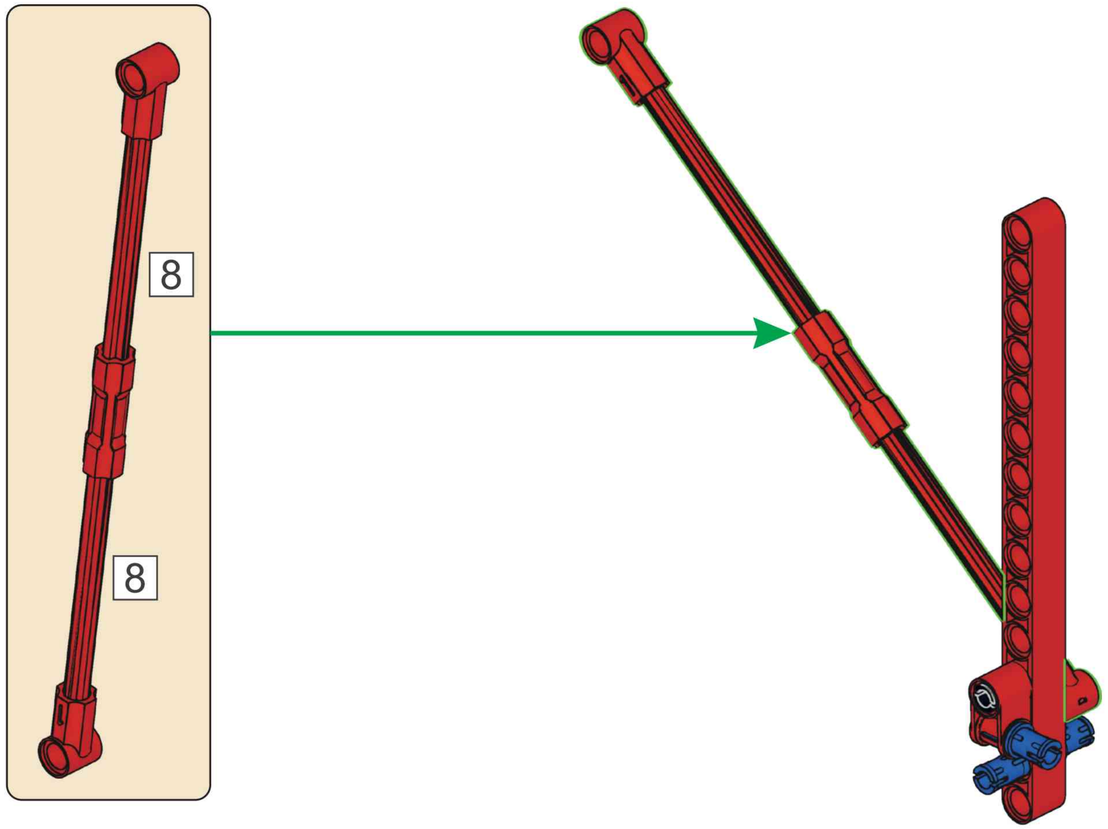

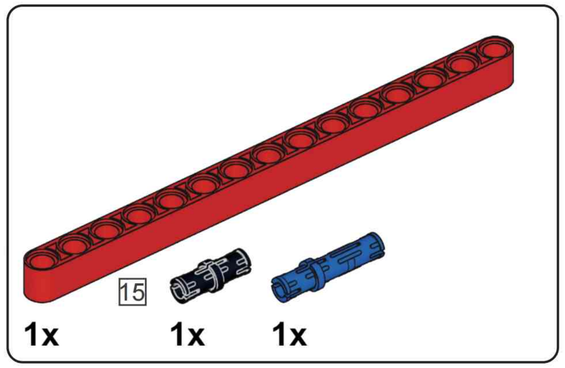

P52

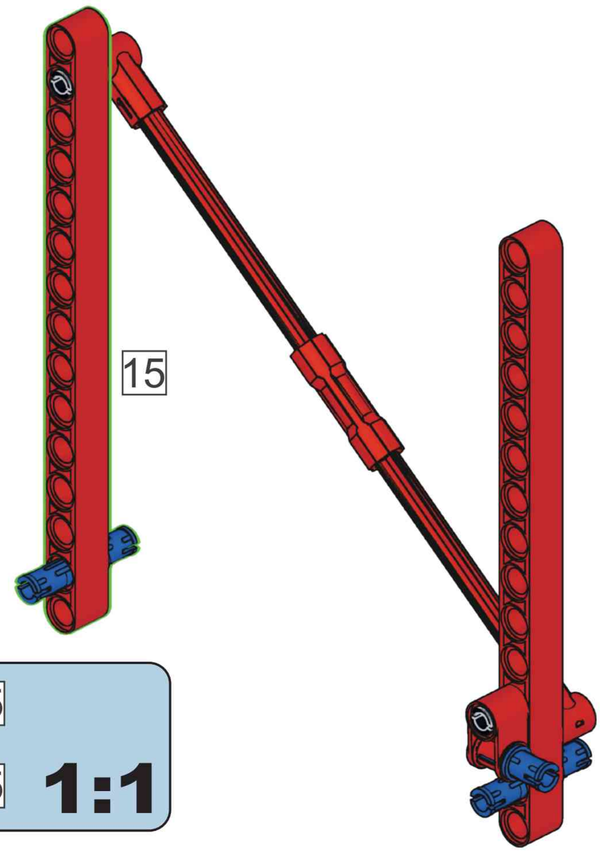

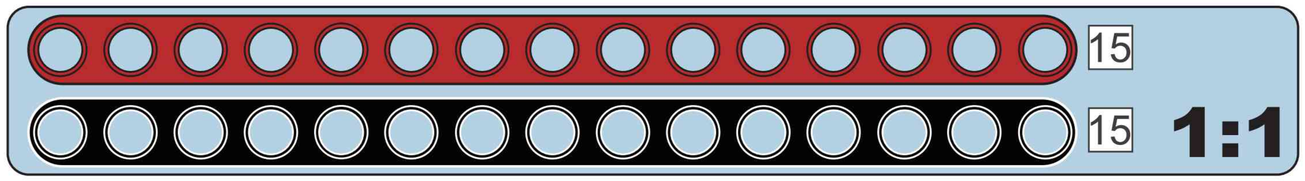

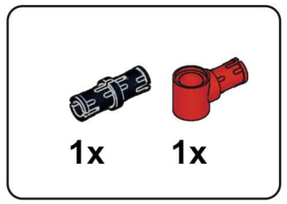

P53

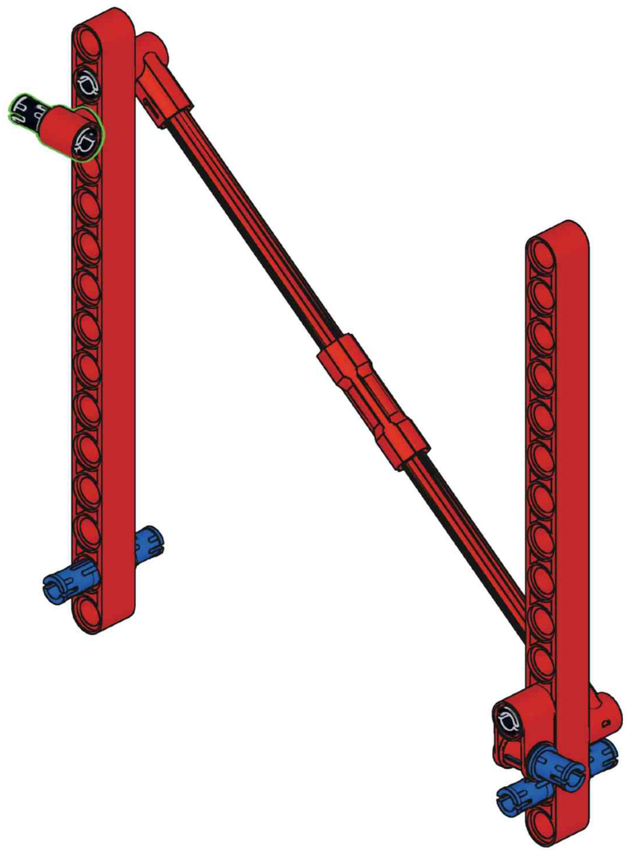

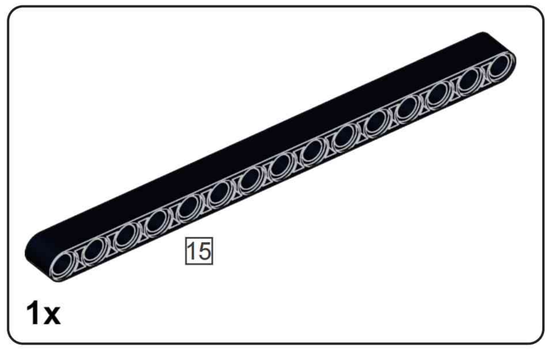

P54

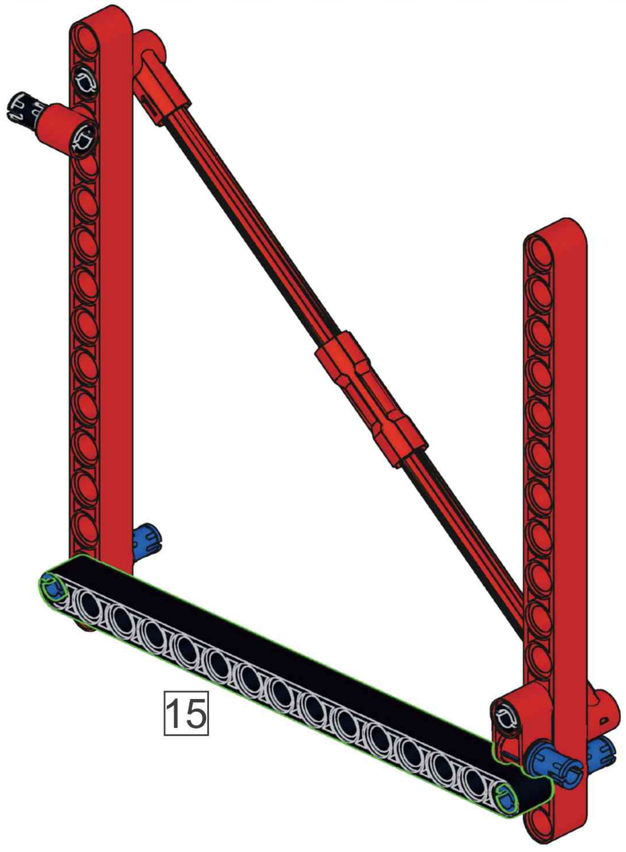

P55

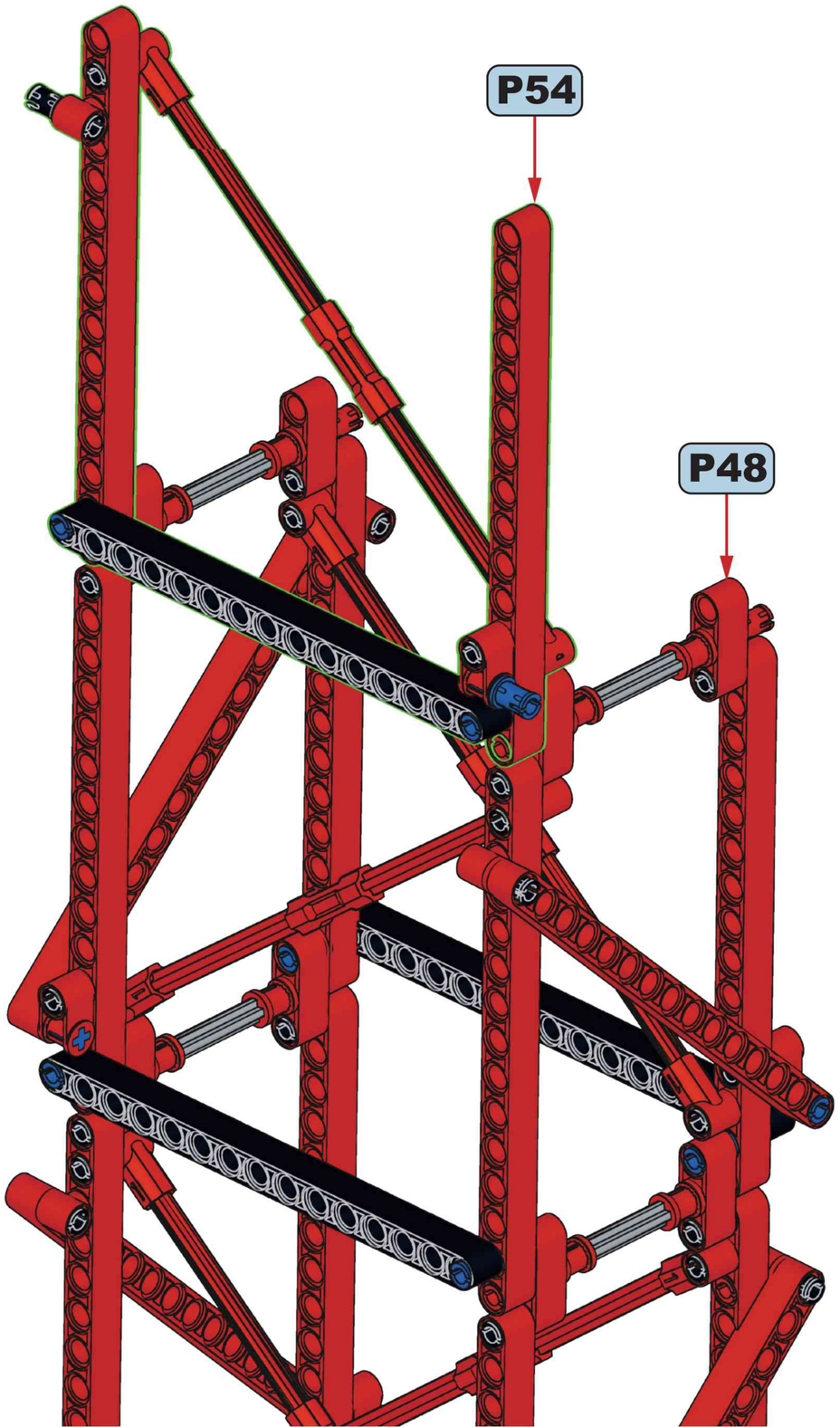

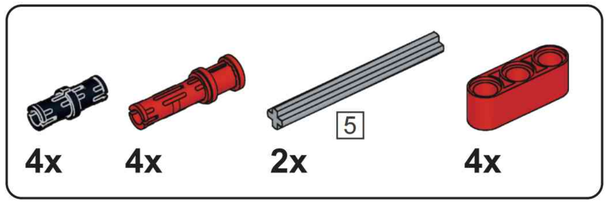

P56

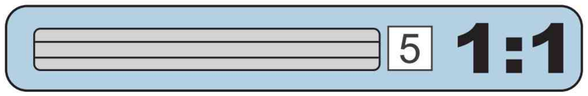

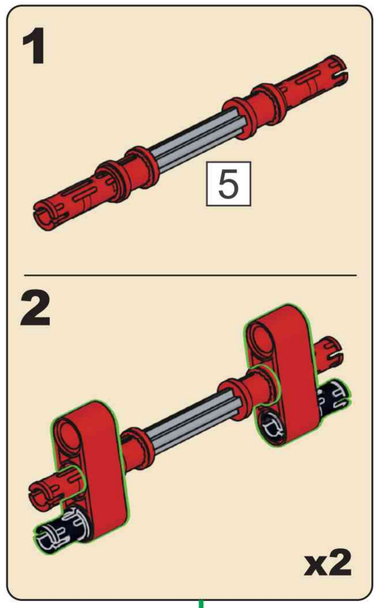

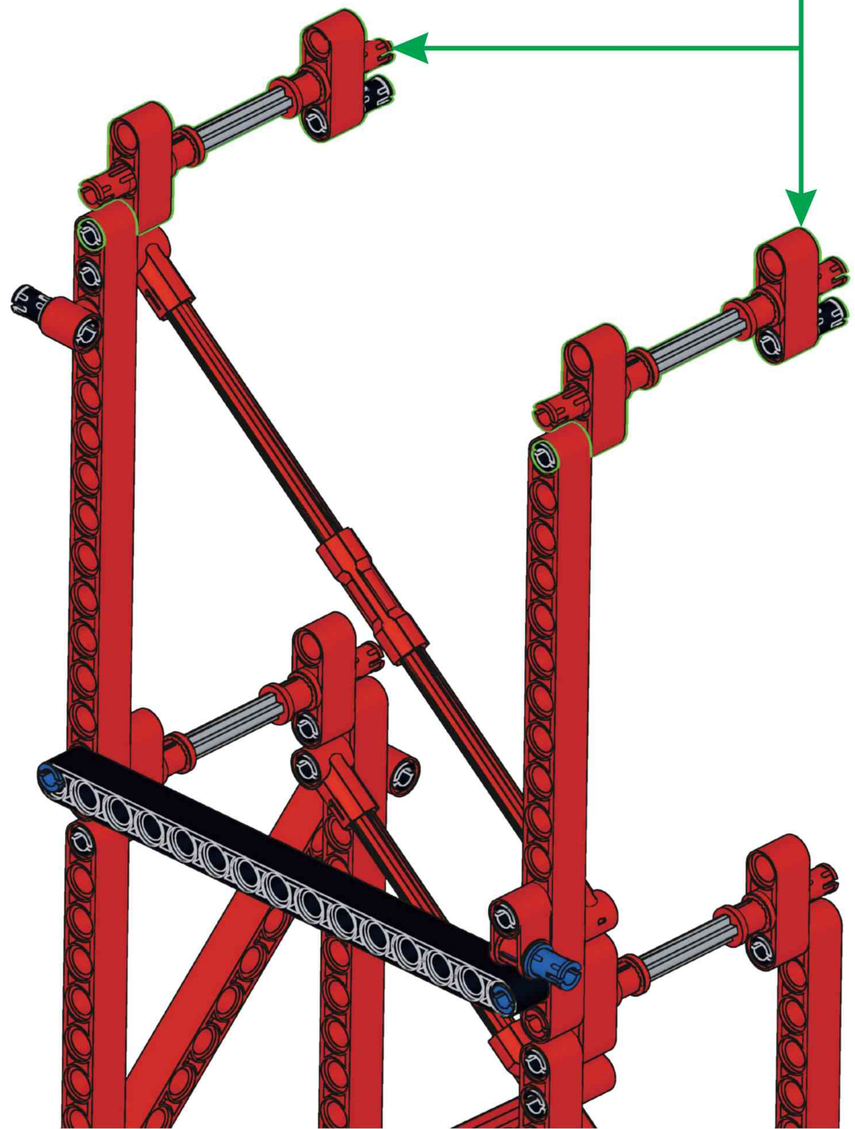

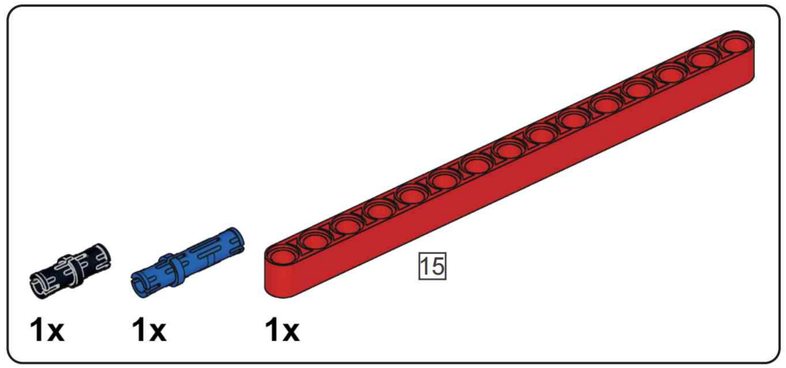

P57

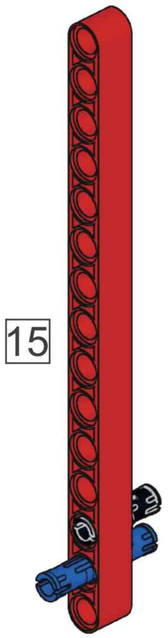

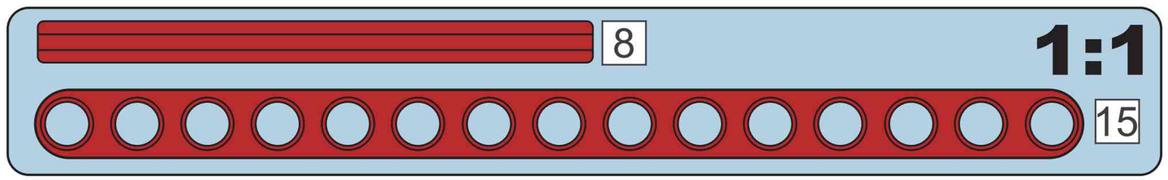

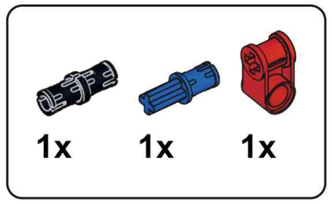

P58

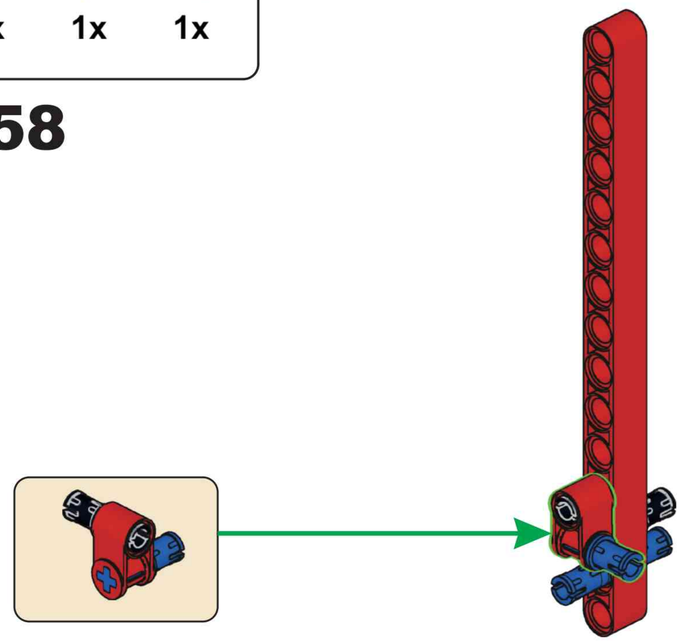

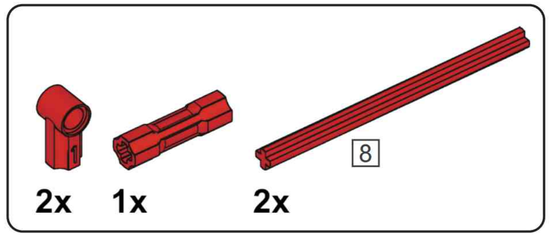

P59

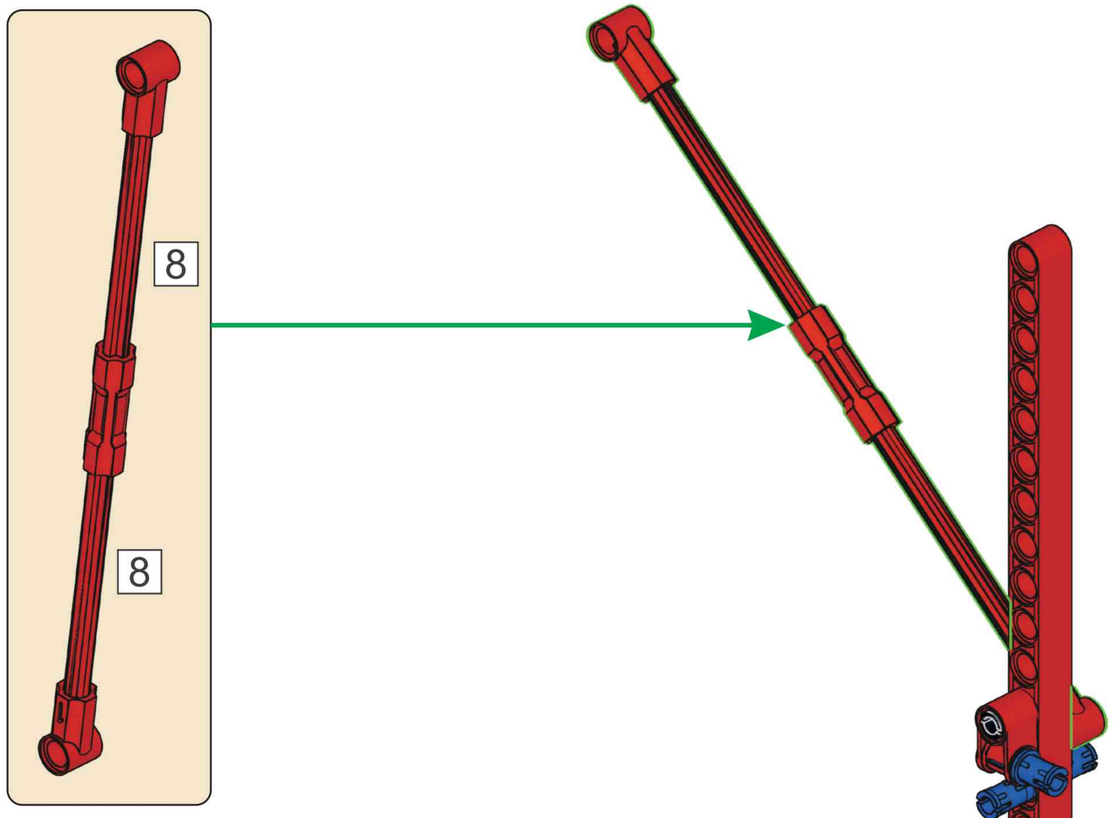

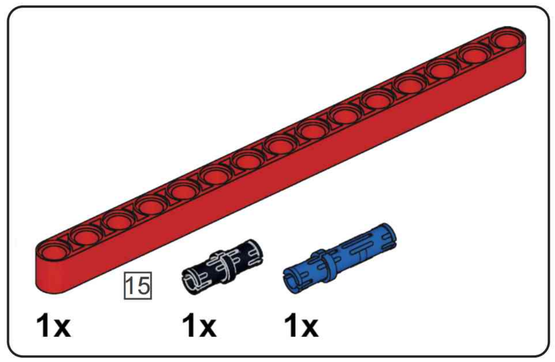

P60

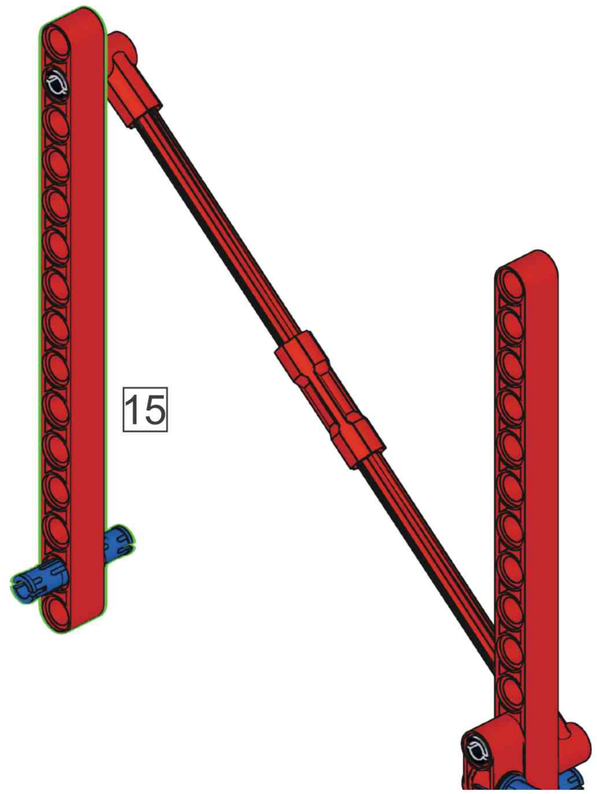

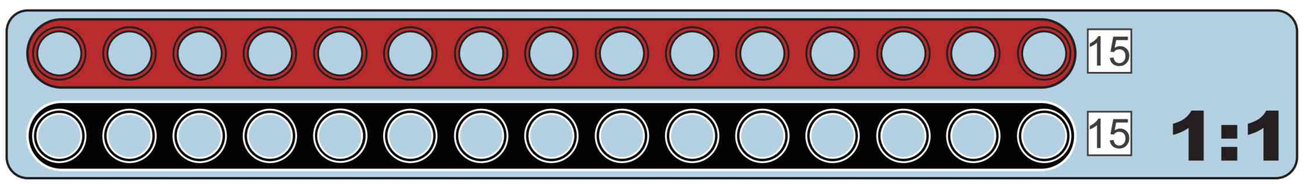

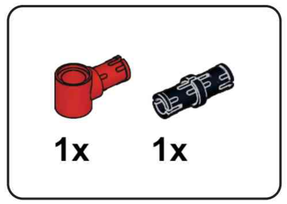

P61

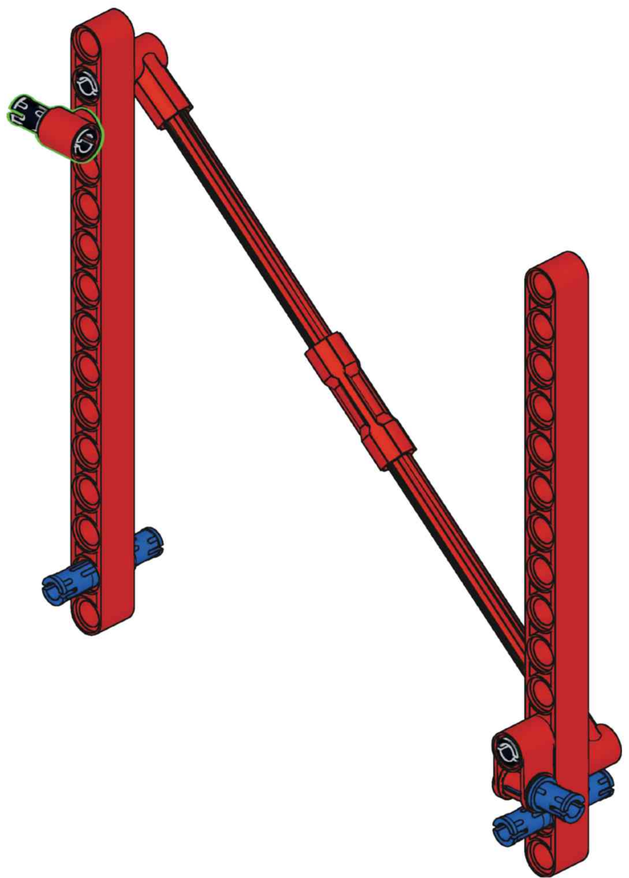

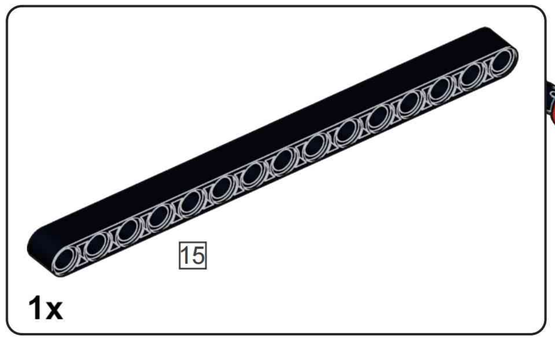

P62

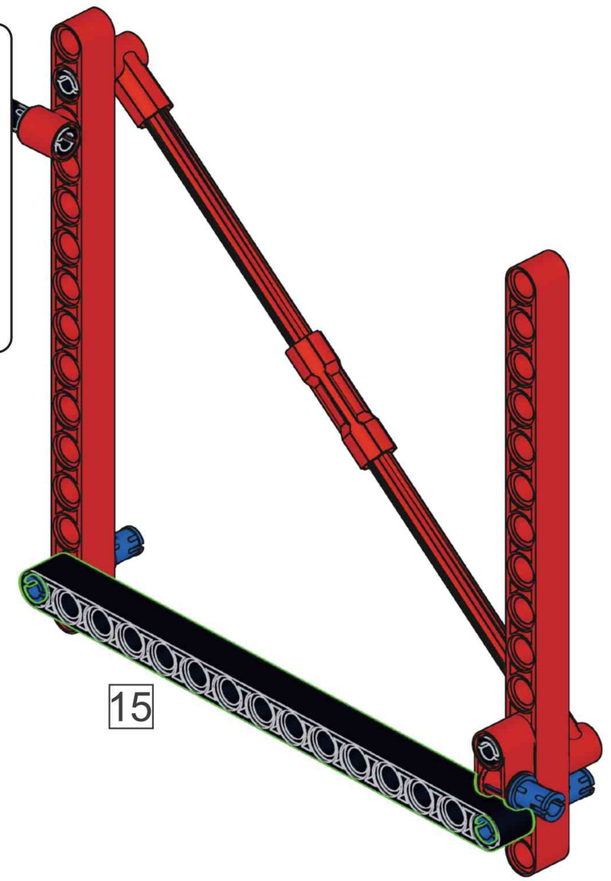

P63

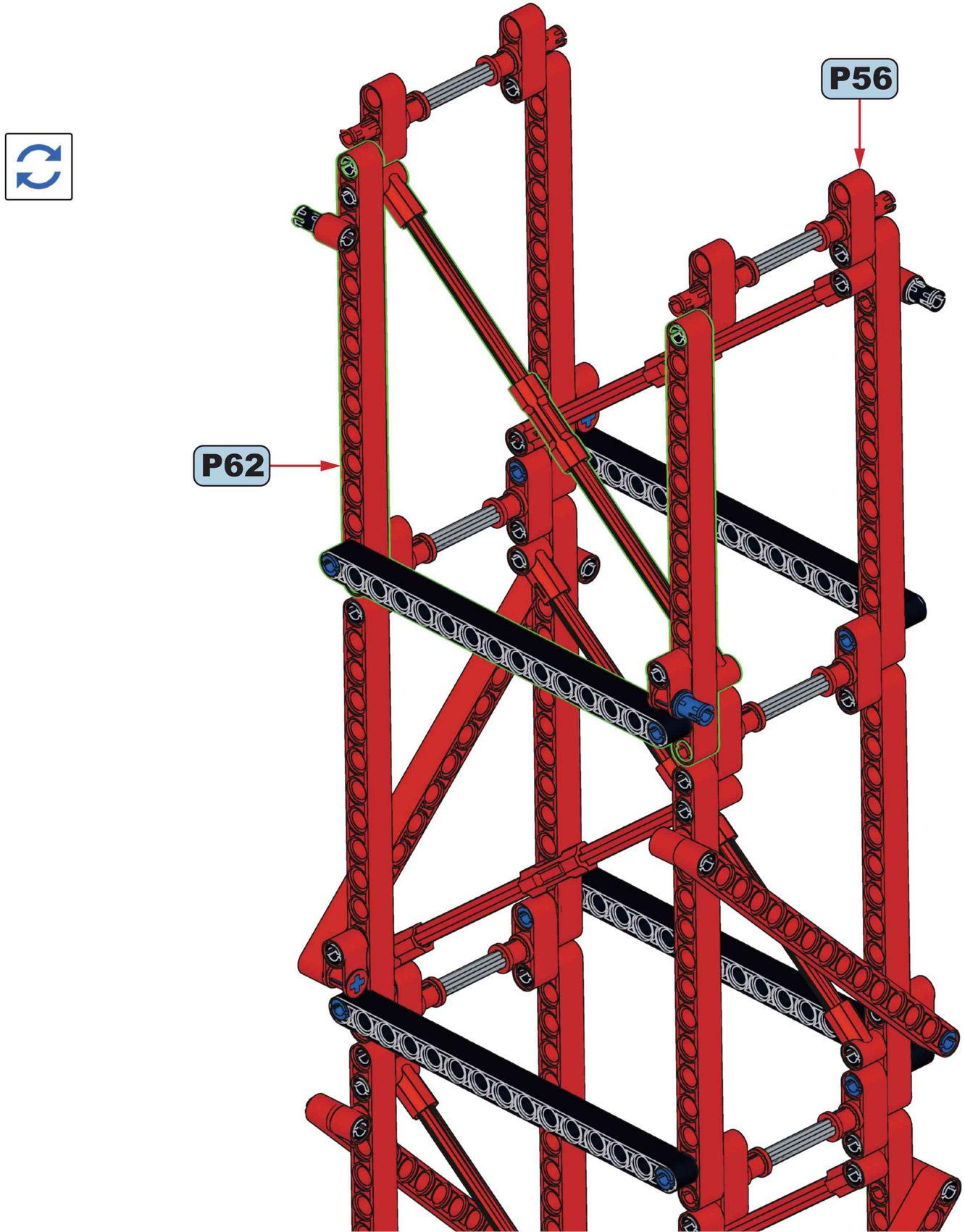

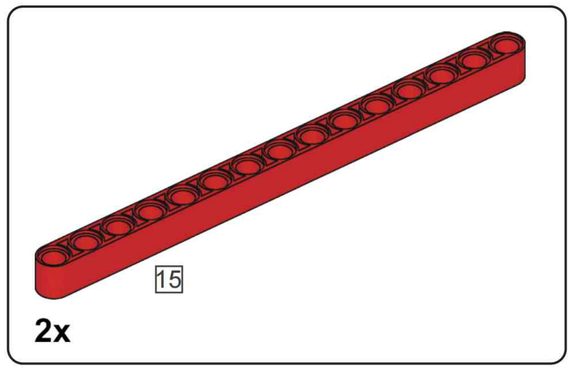

P64

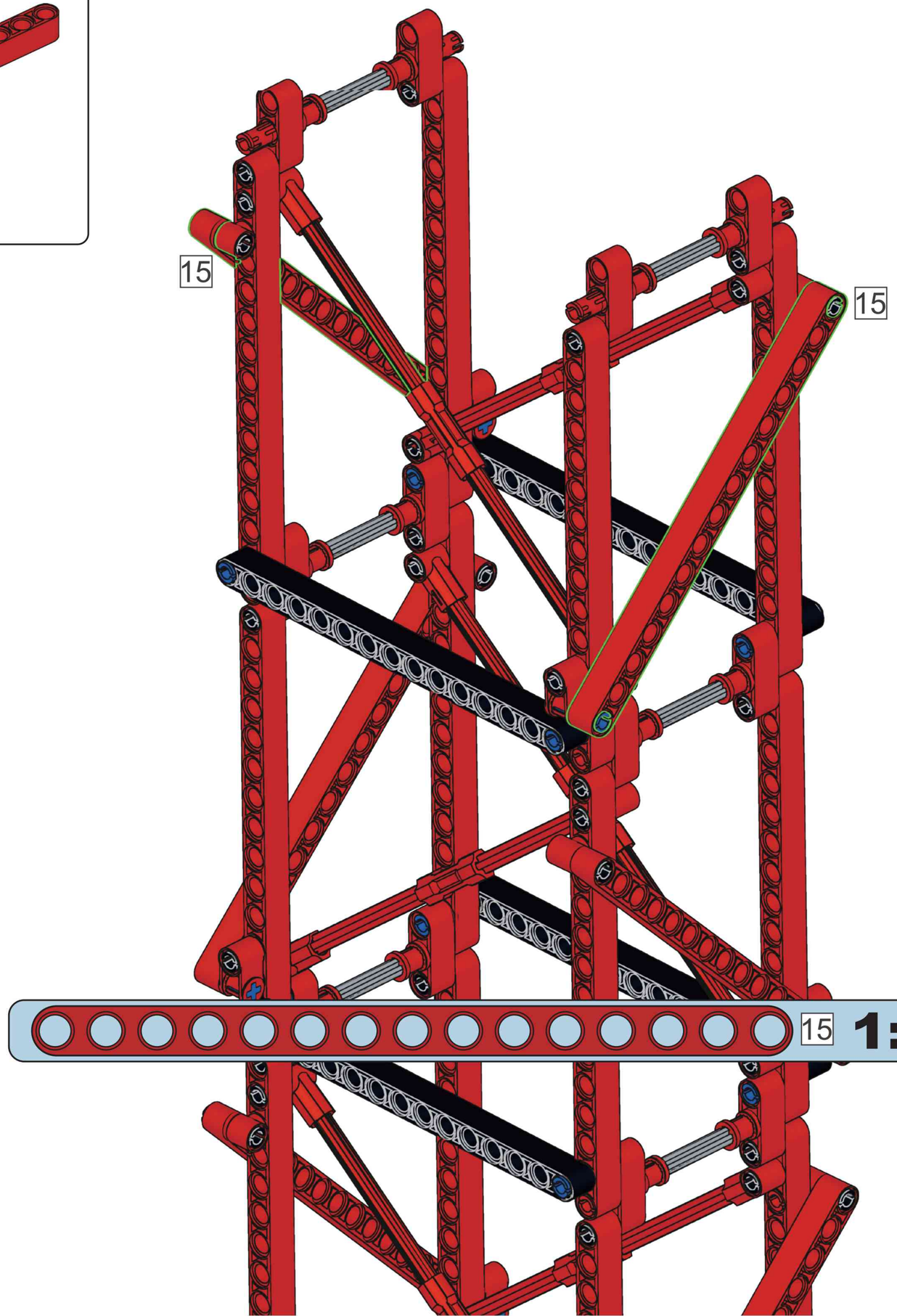

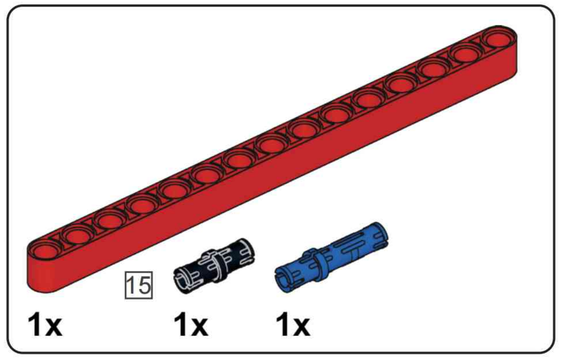

P65

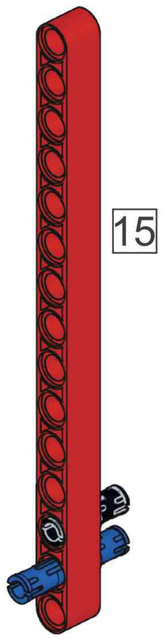

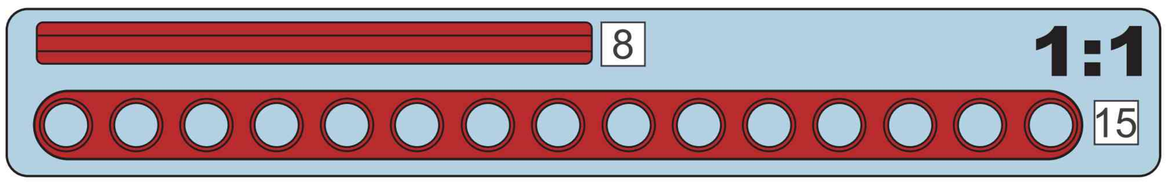

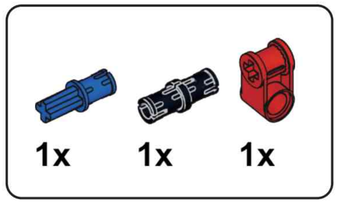

P66

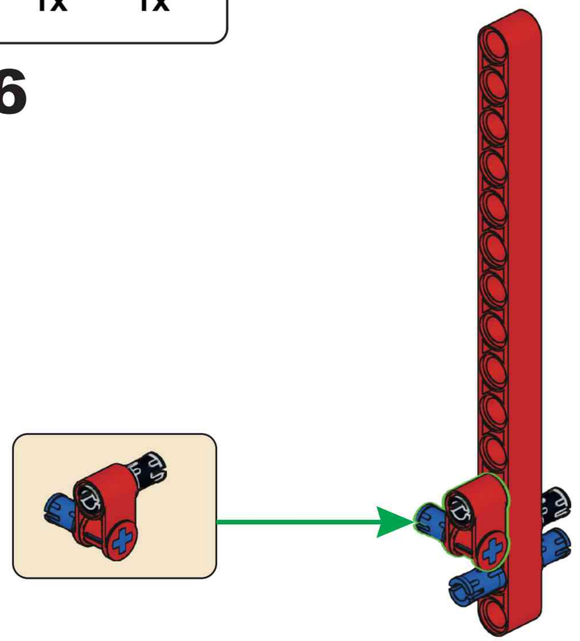

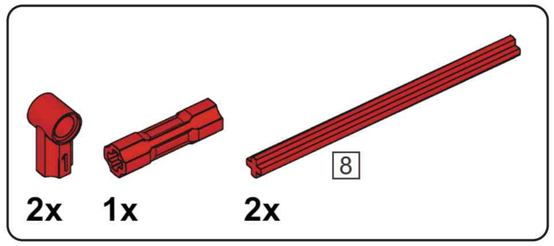

P67

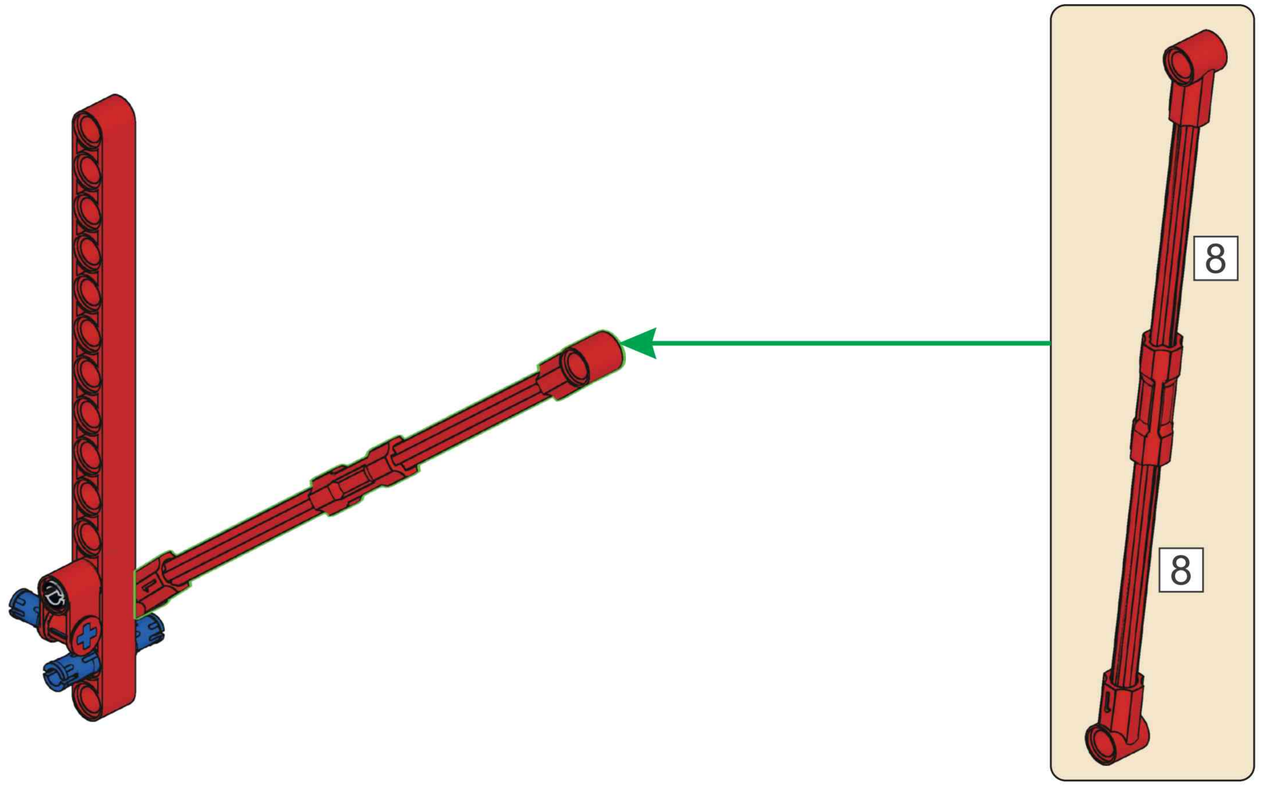

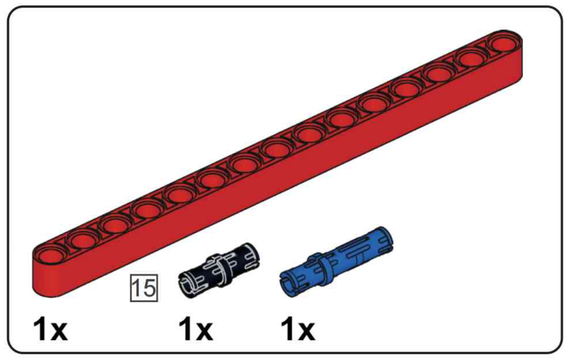

P68

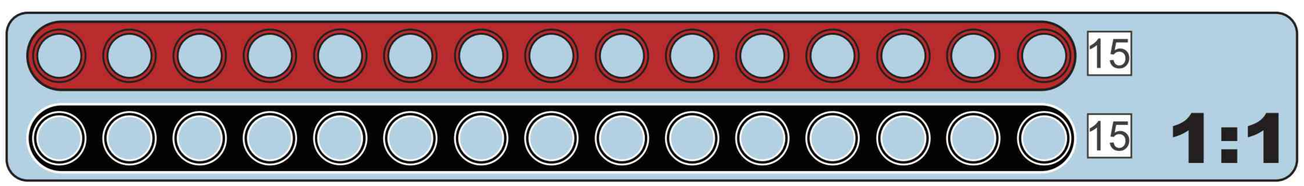

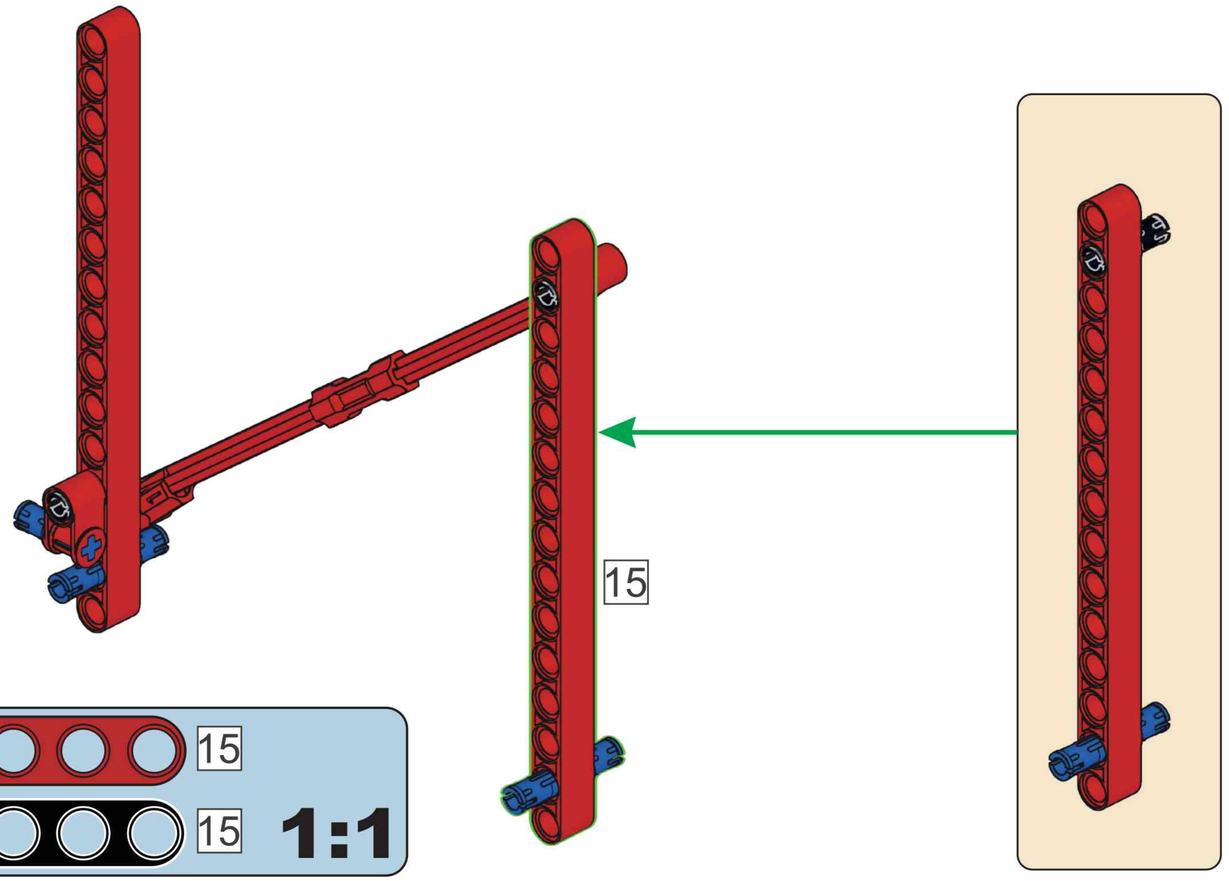

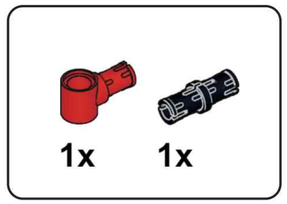

P69

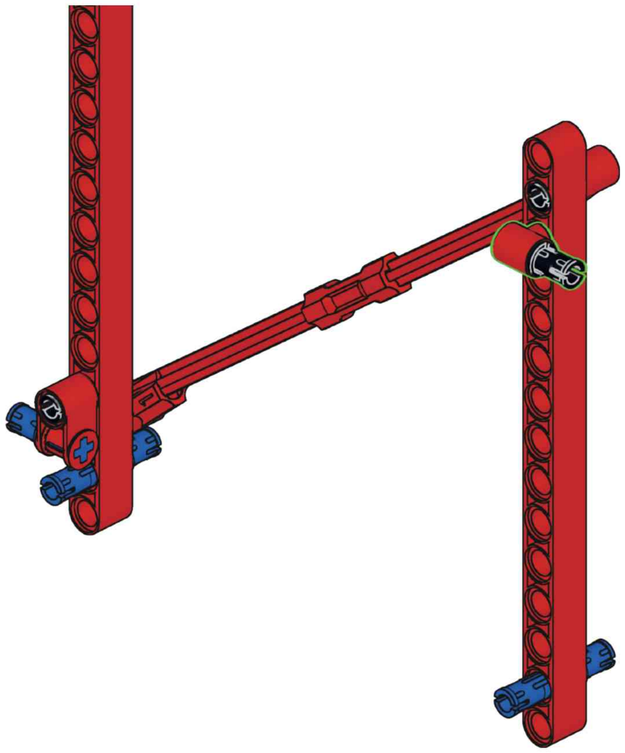

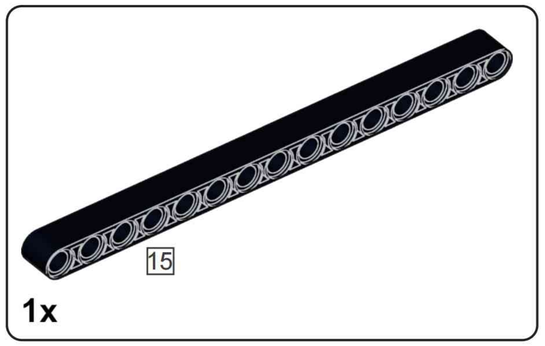

P70

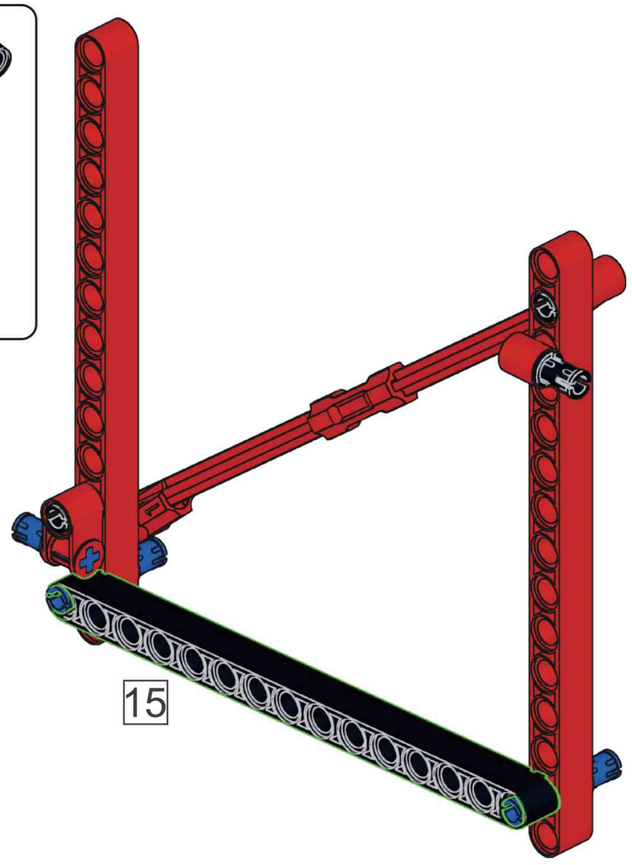

P71

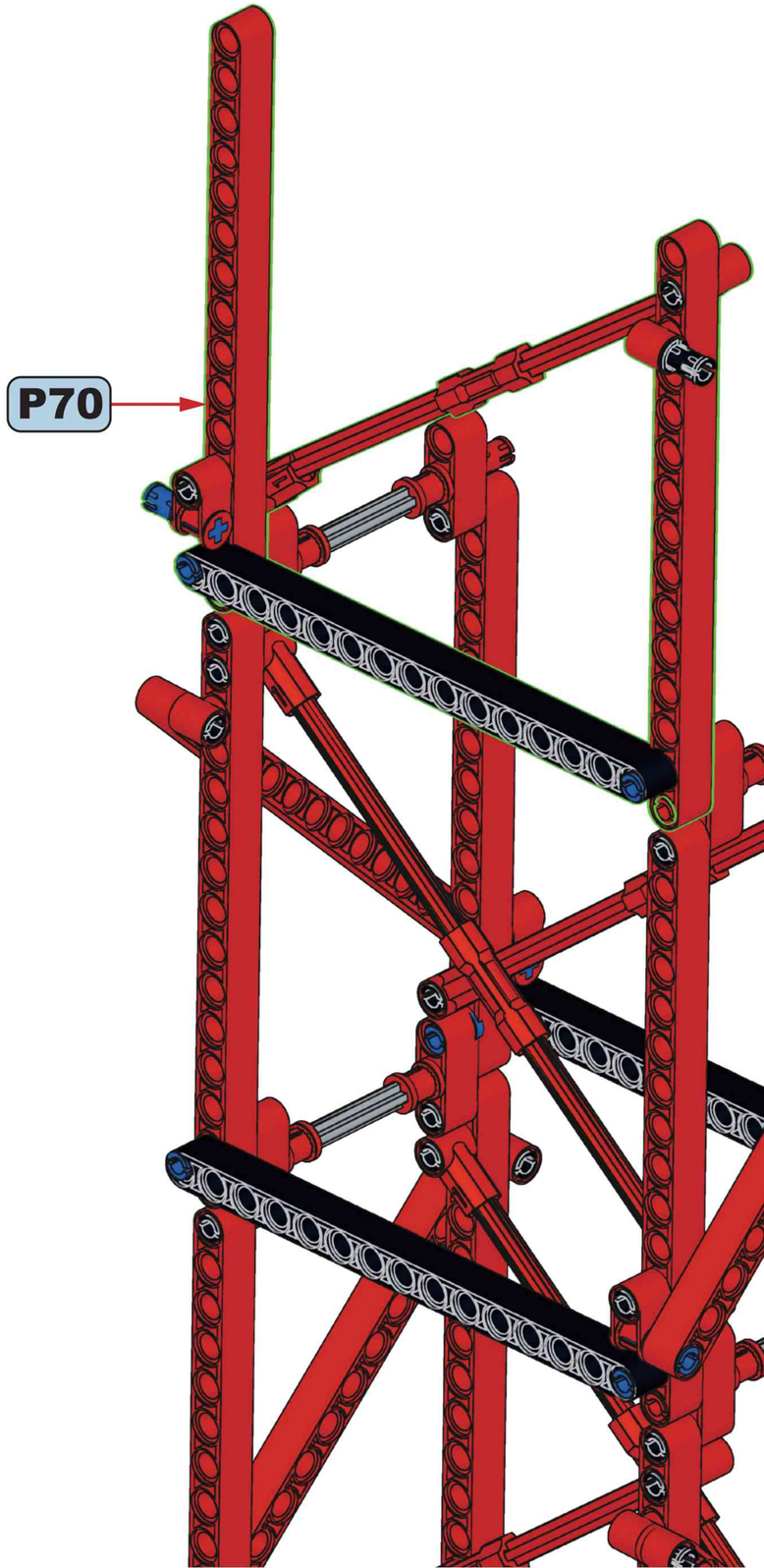

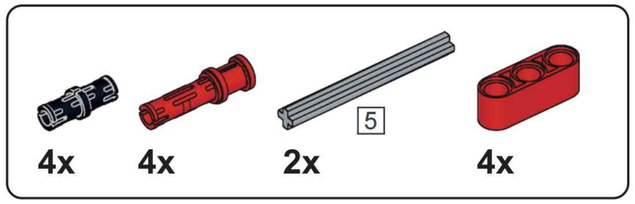

P72

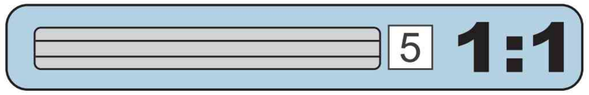

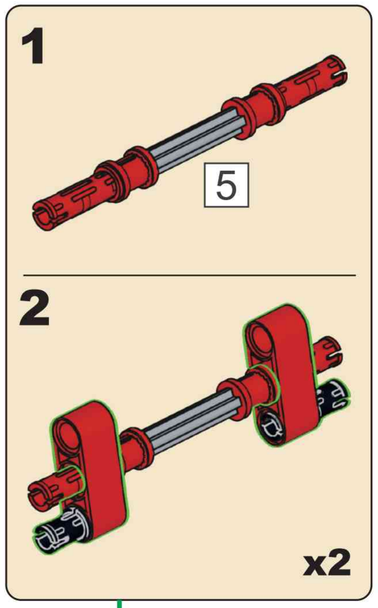

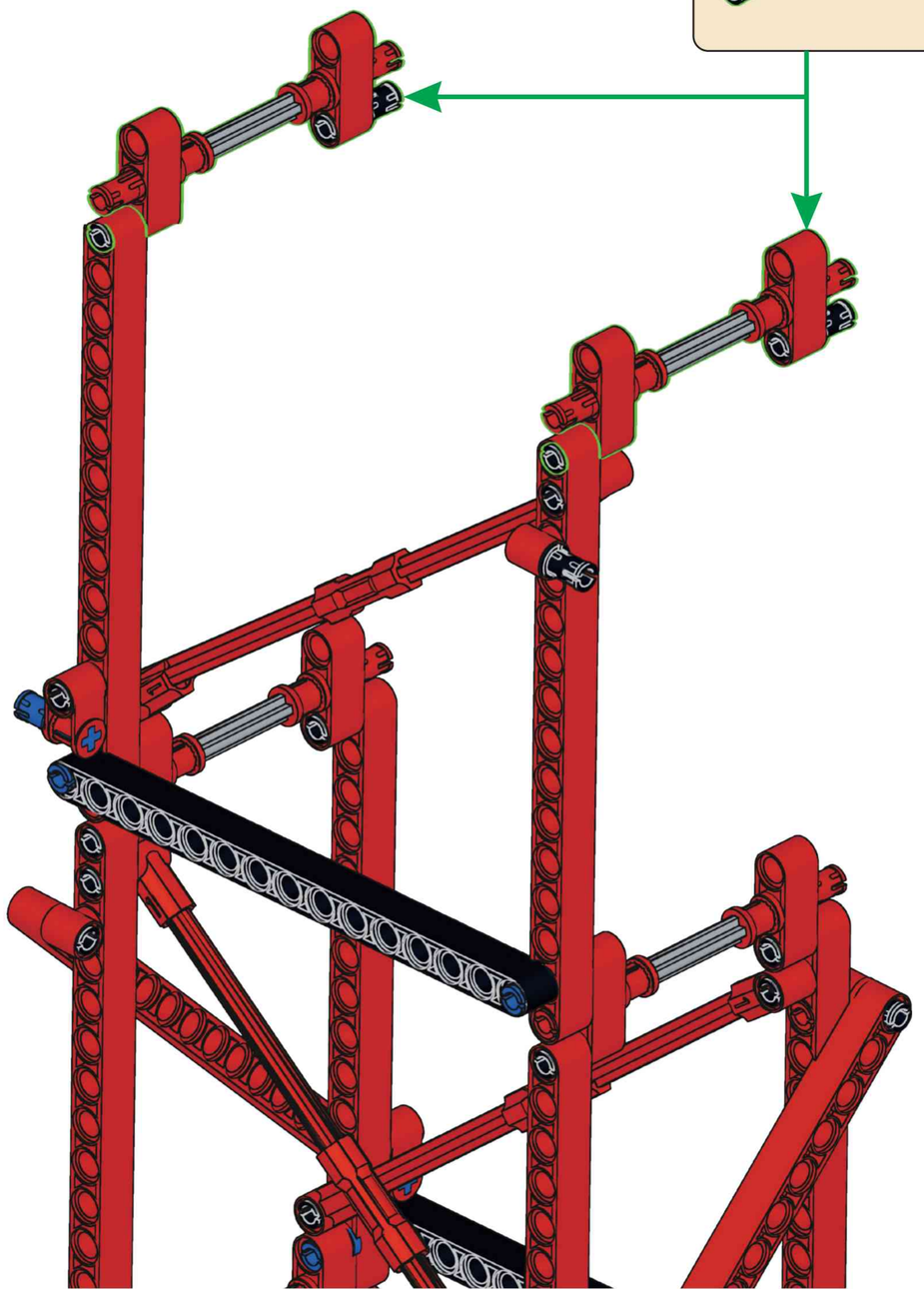

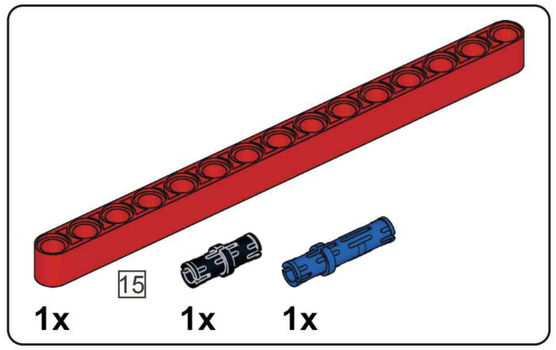

P73

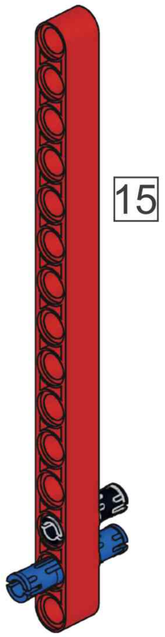

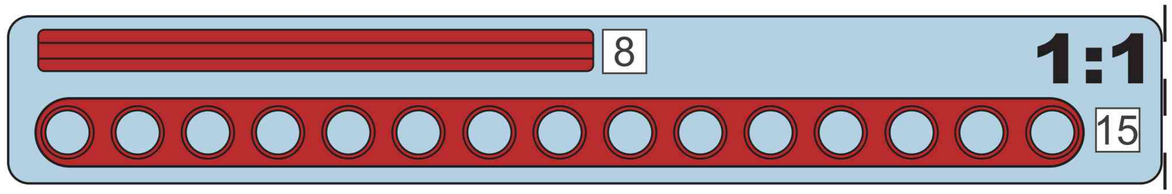

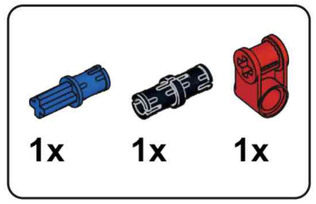

P74

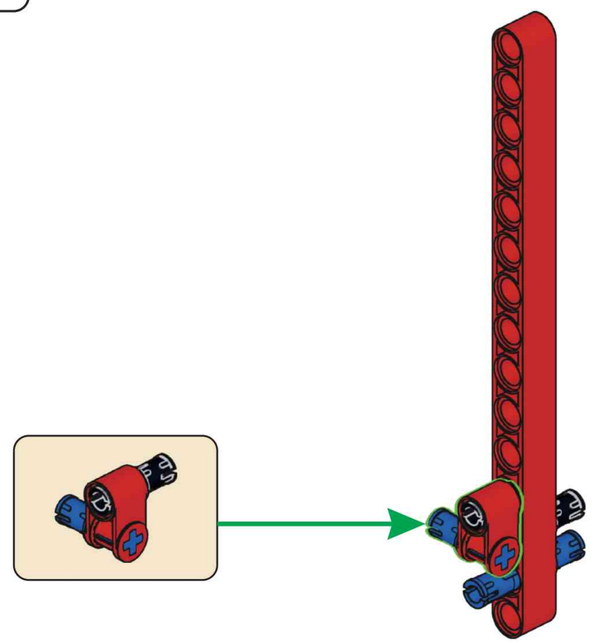

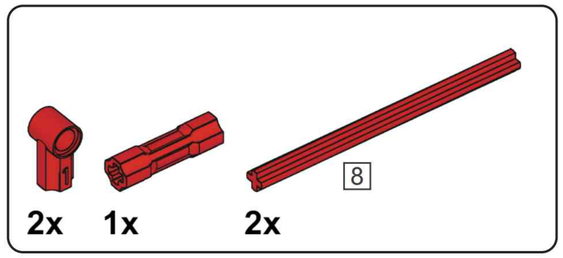

P75

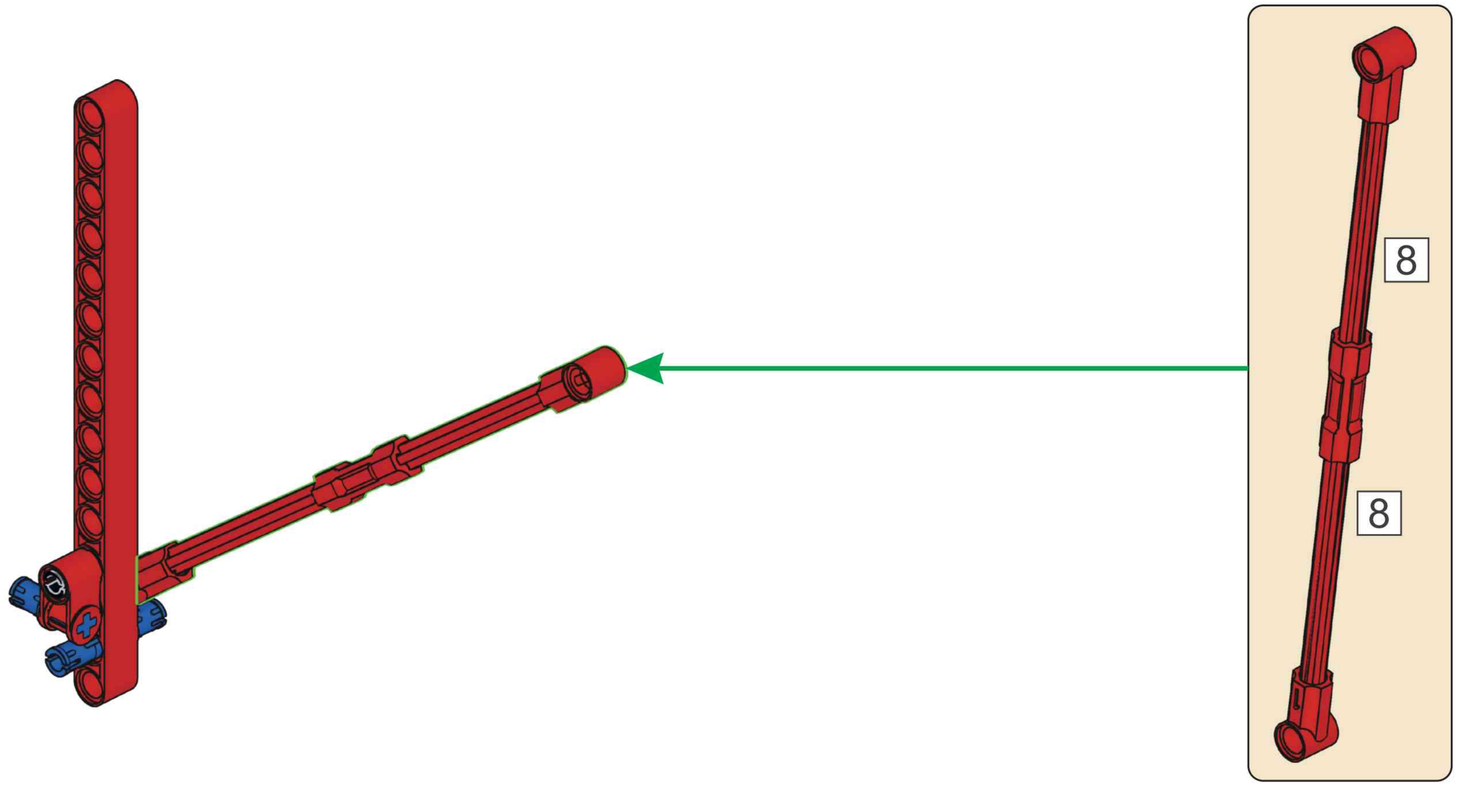

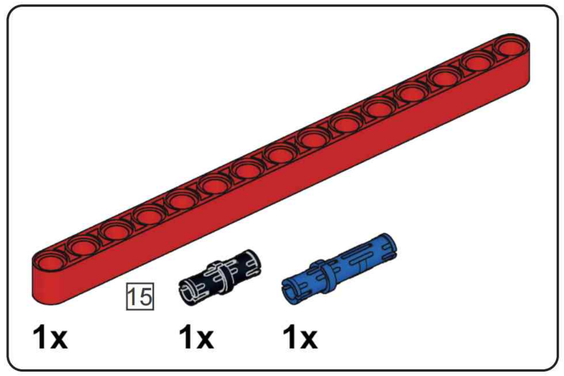

P76

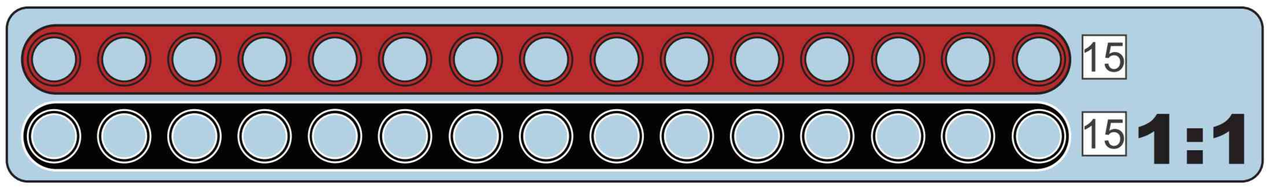

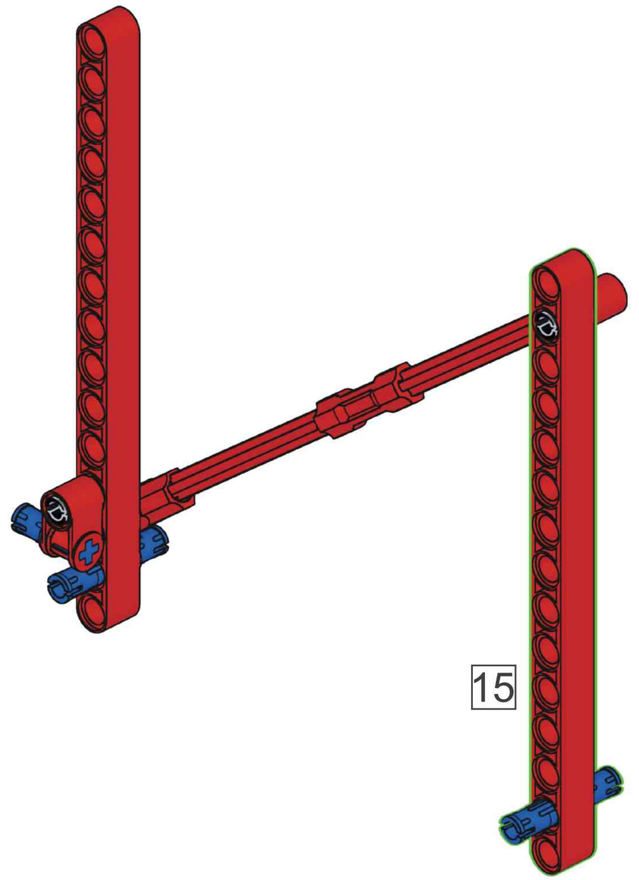

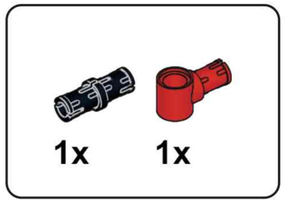

P77

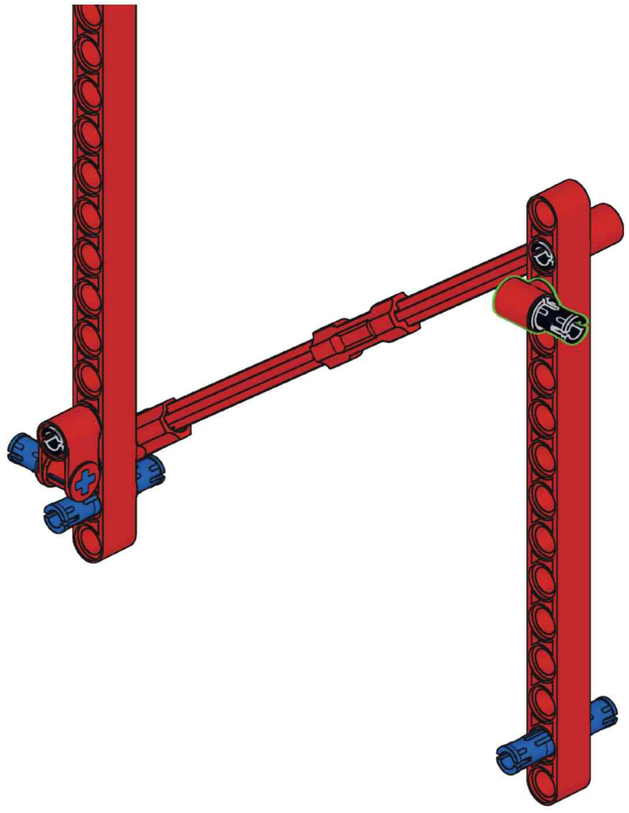

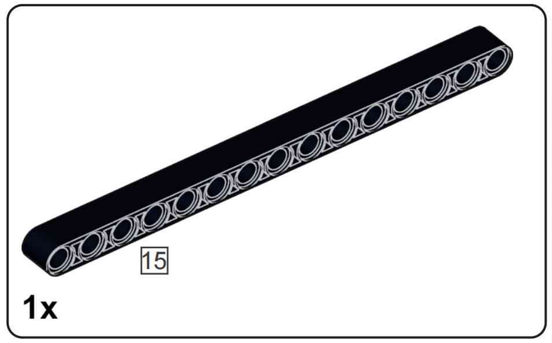

P78

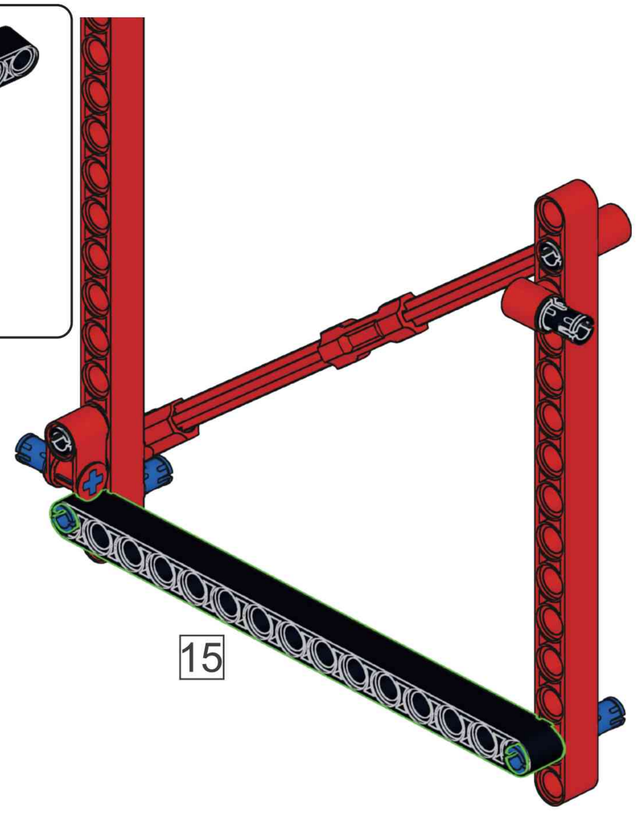

P79

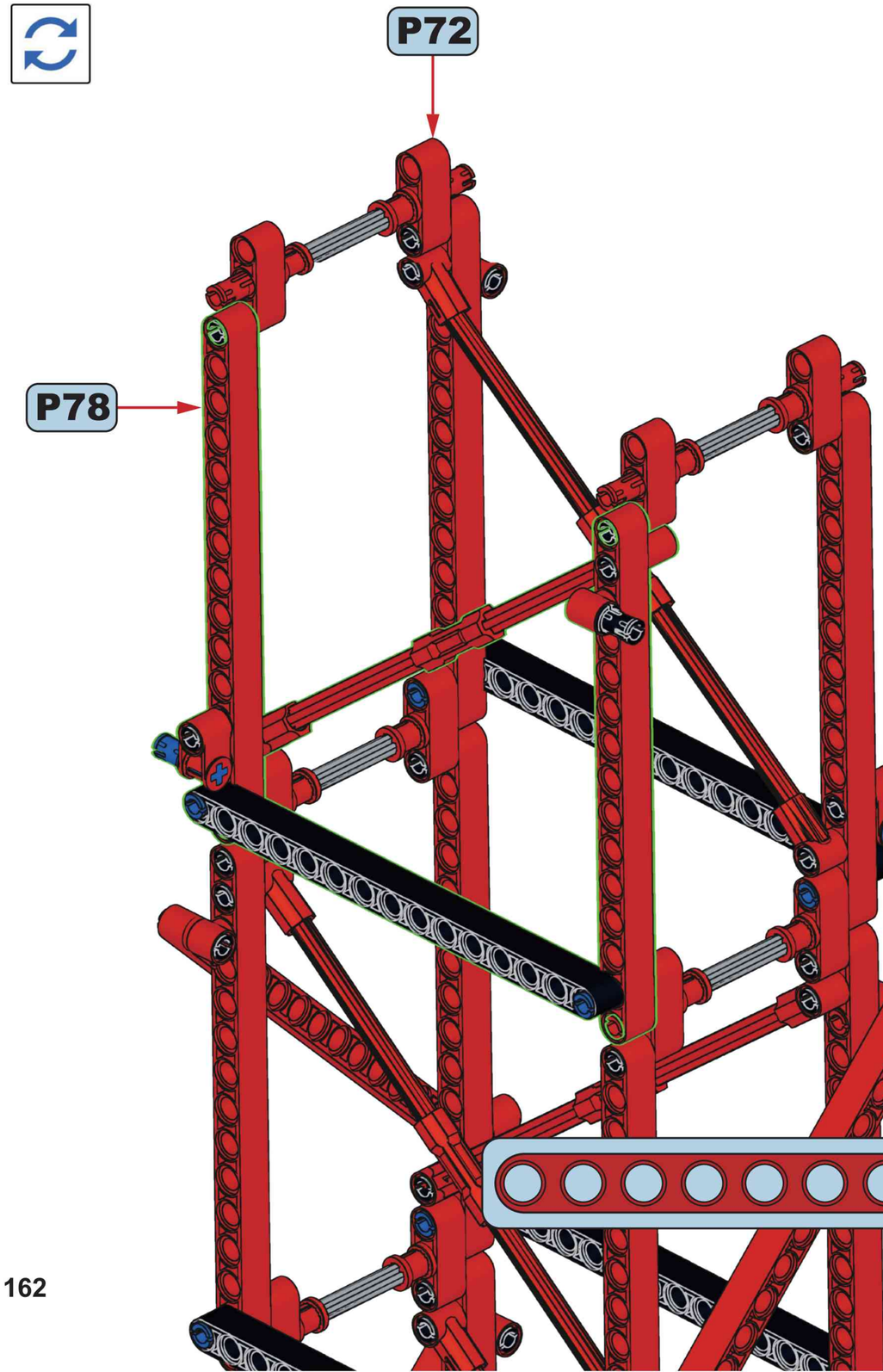

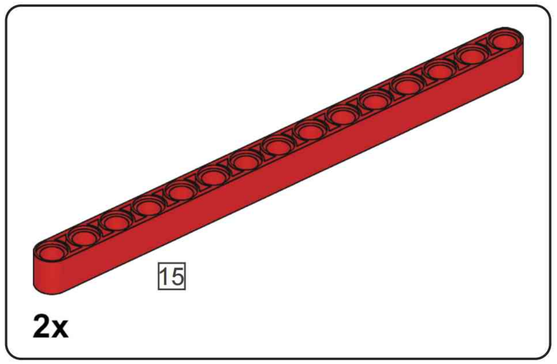

P80

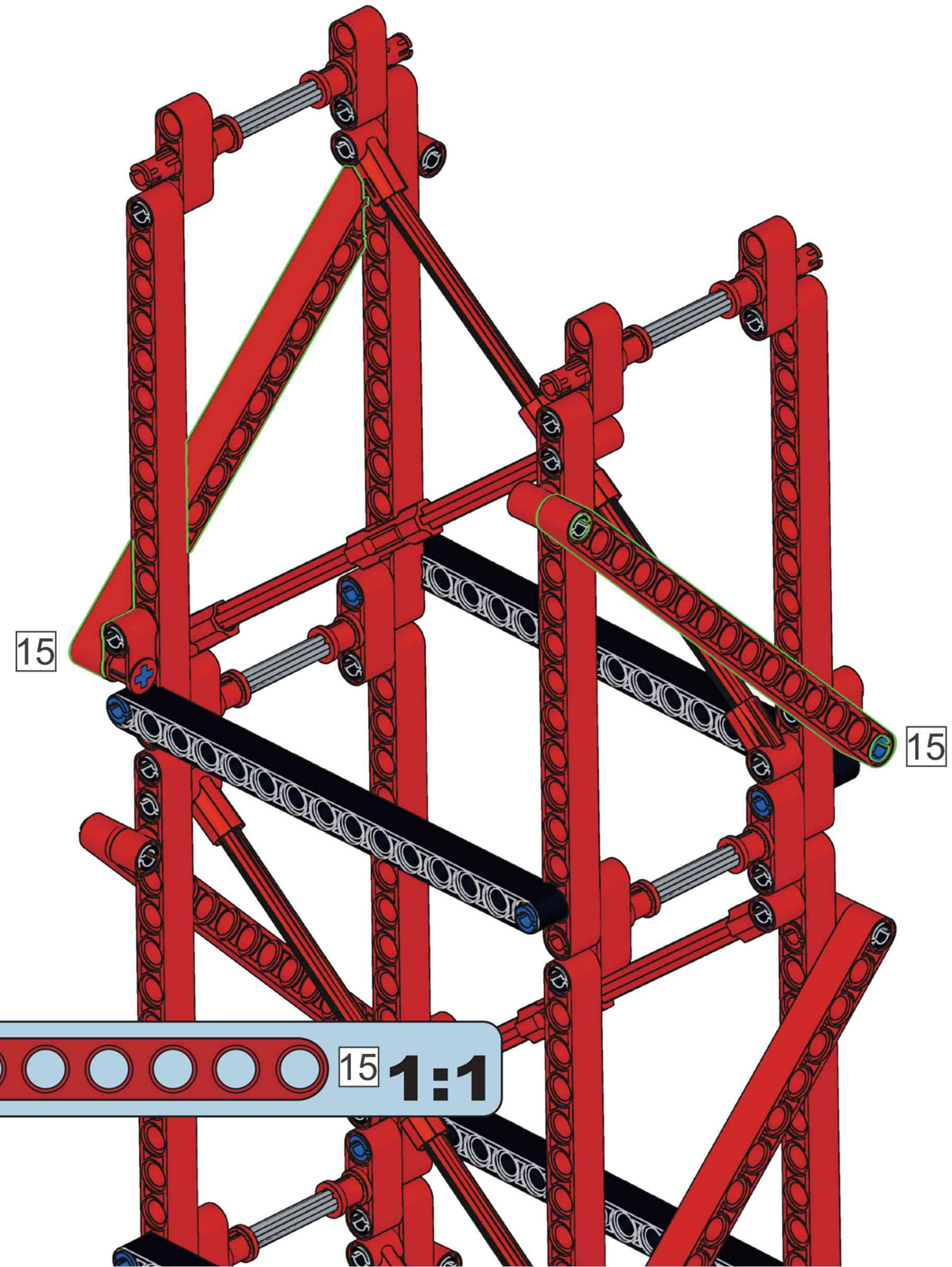

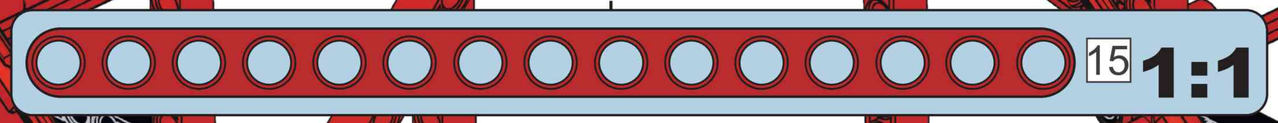

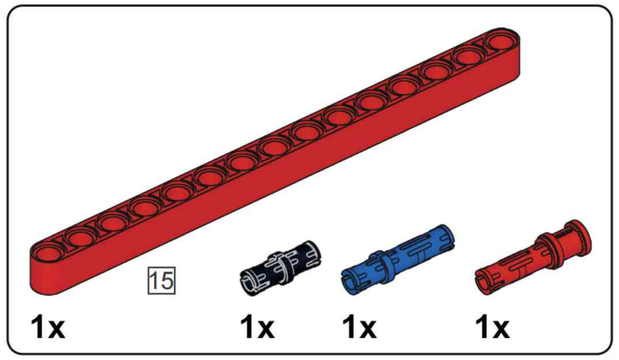

P81

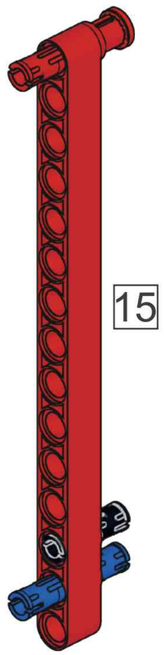

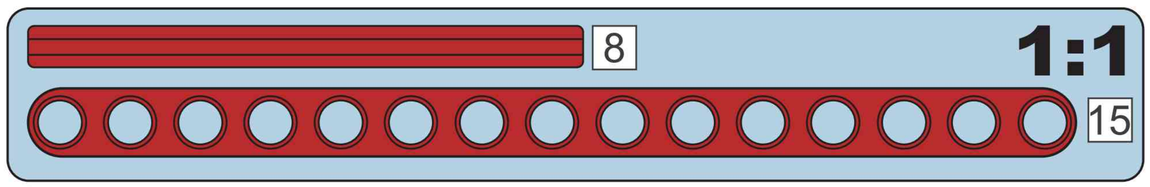

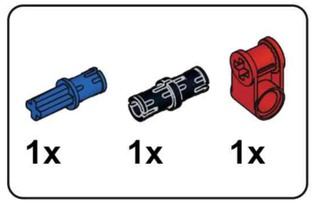

P82



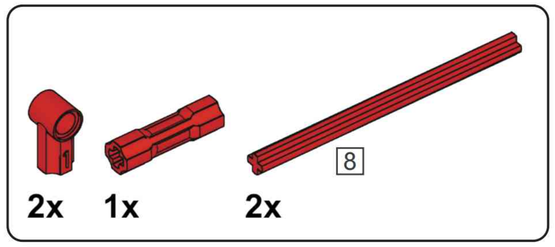

P83

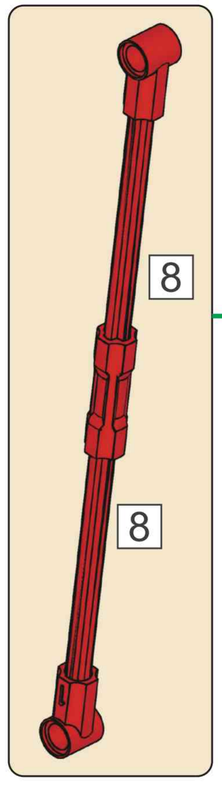

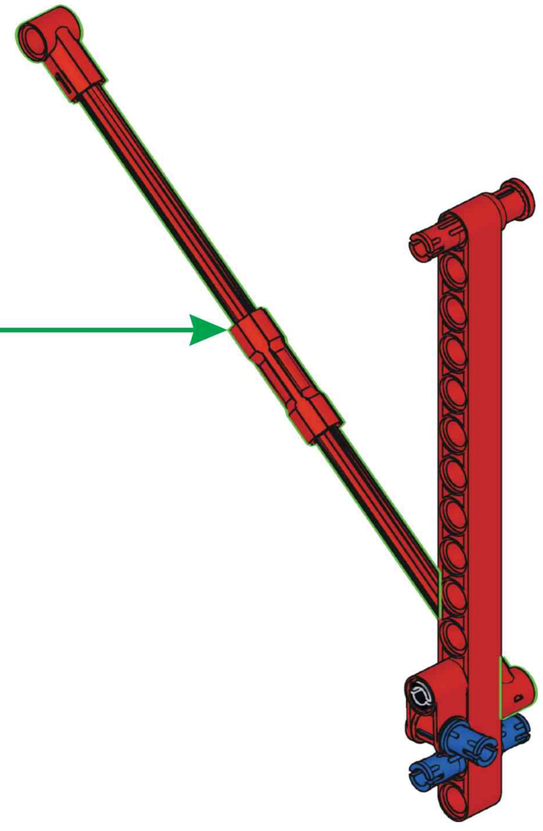

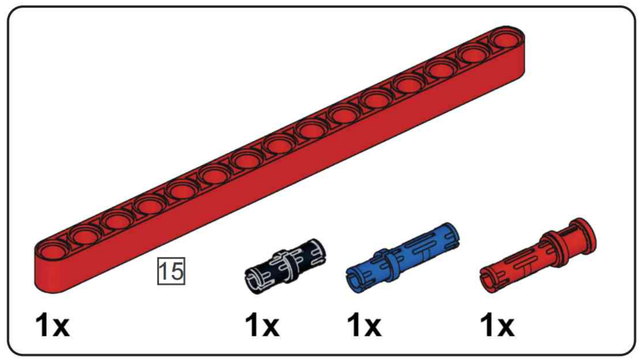

P84

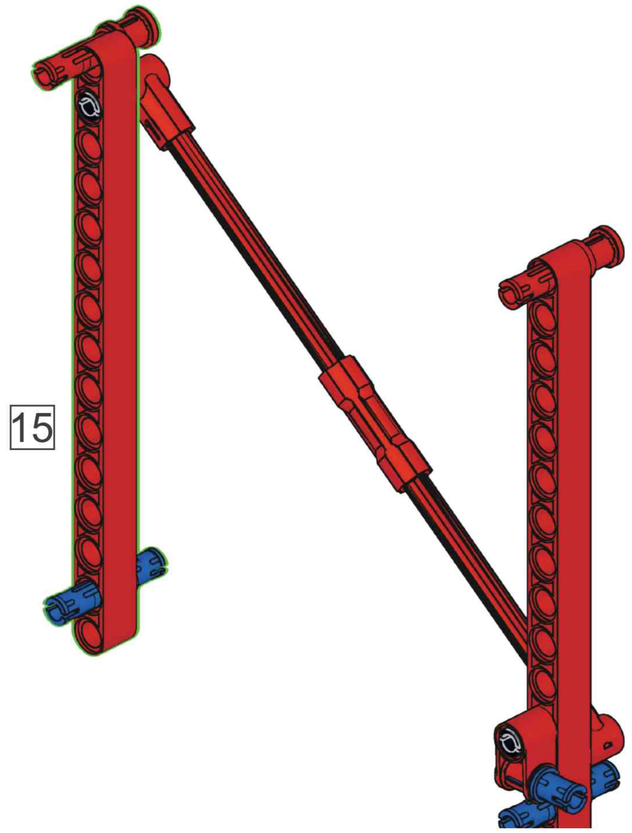

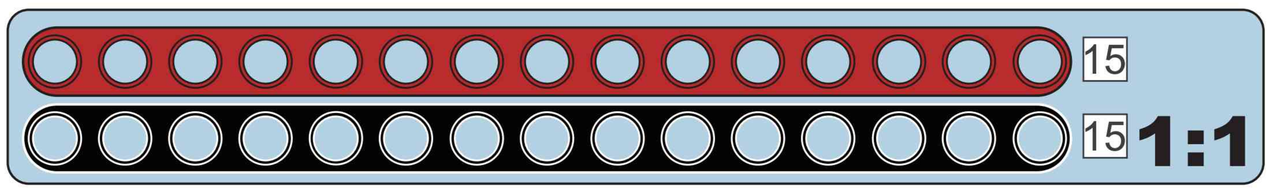

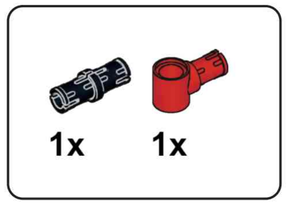

P85

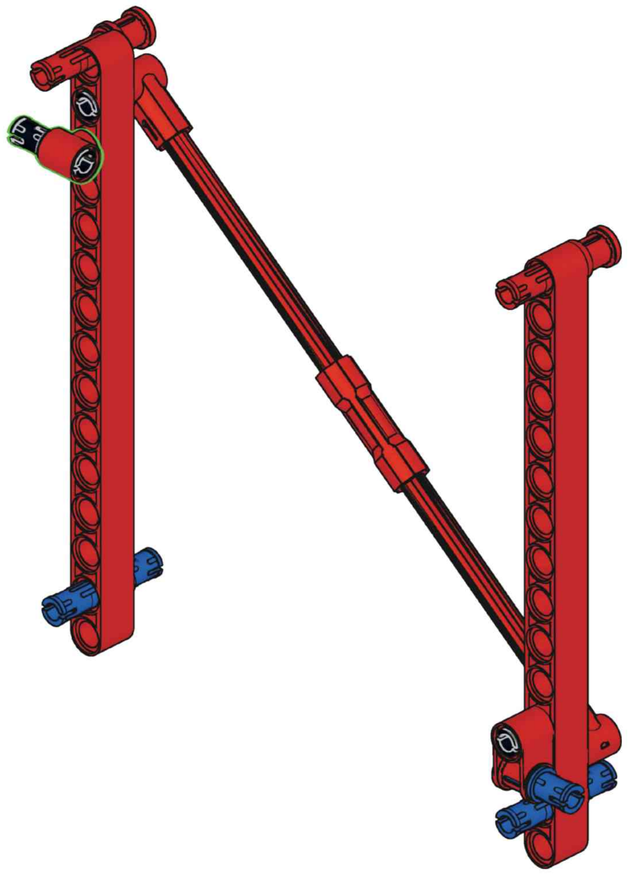

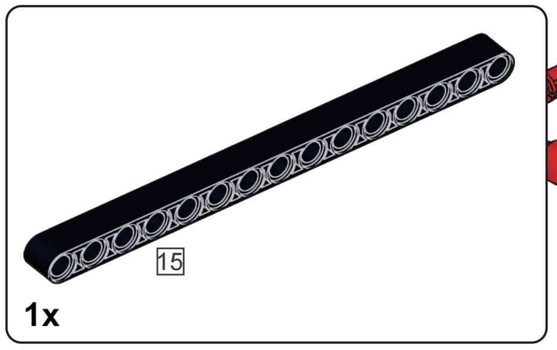

P86

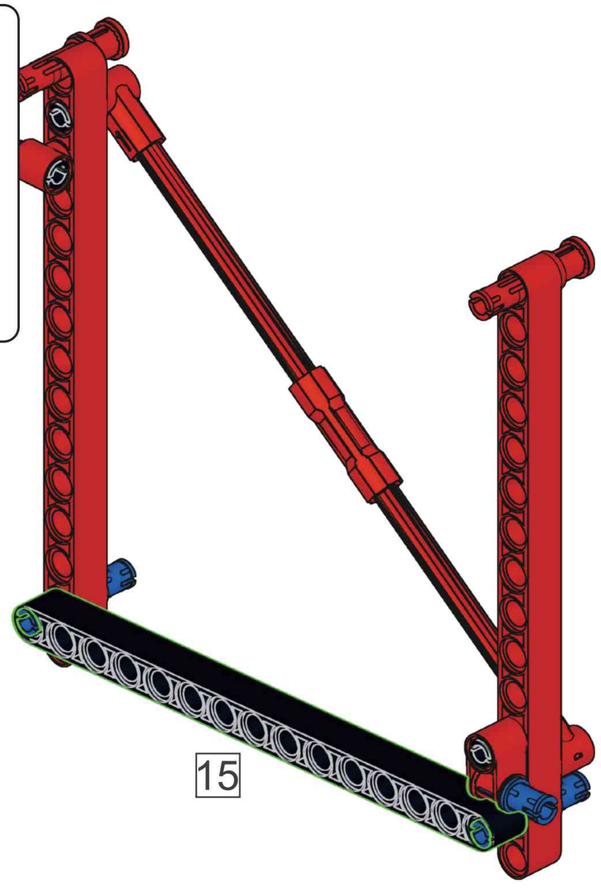

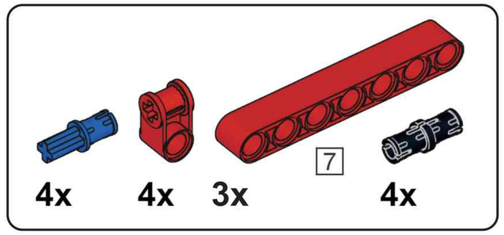

P87

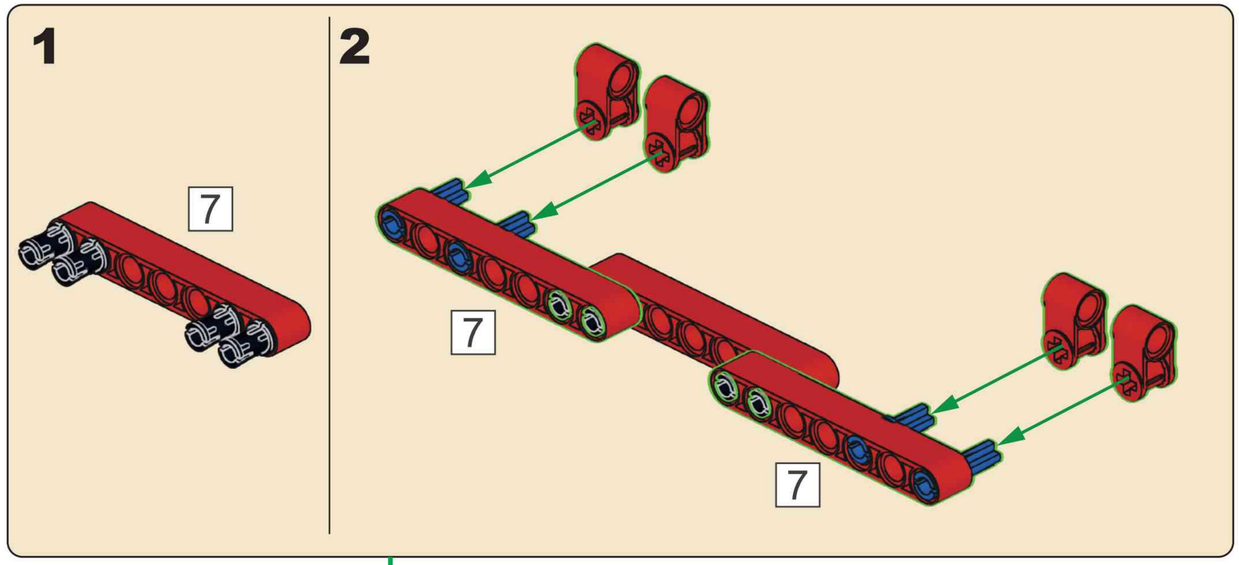

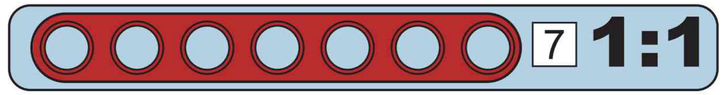

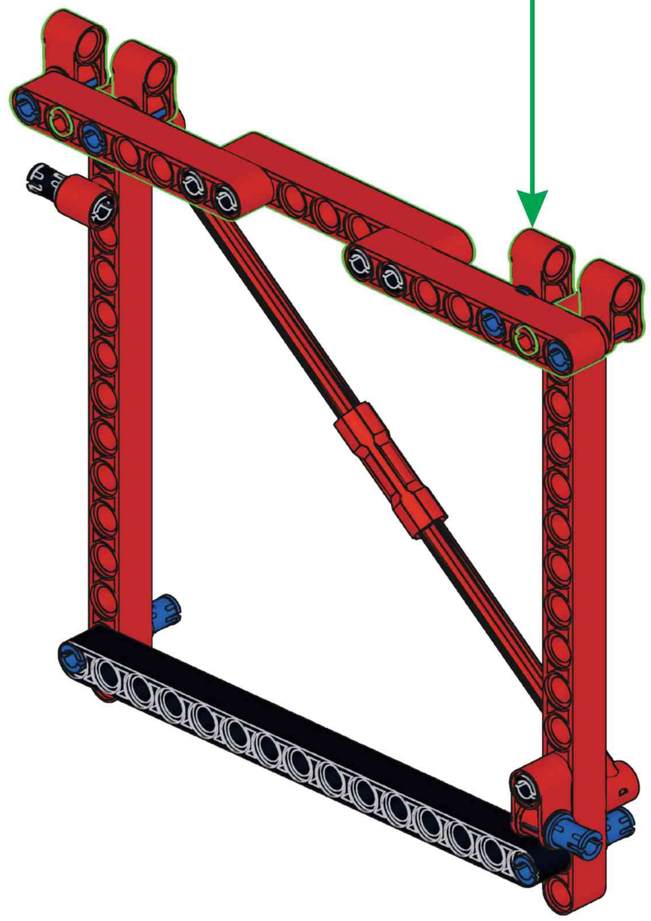

P88



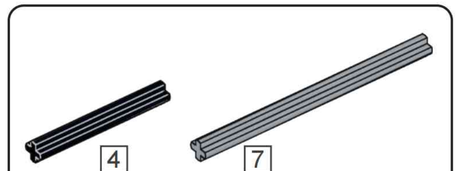

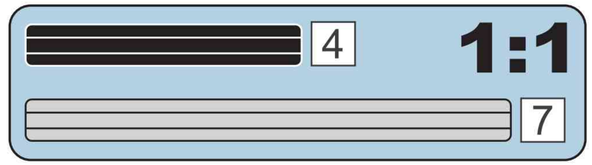

P89

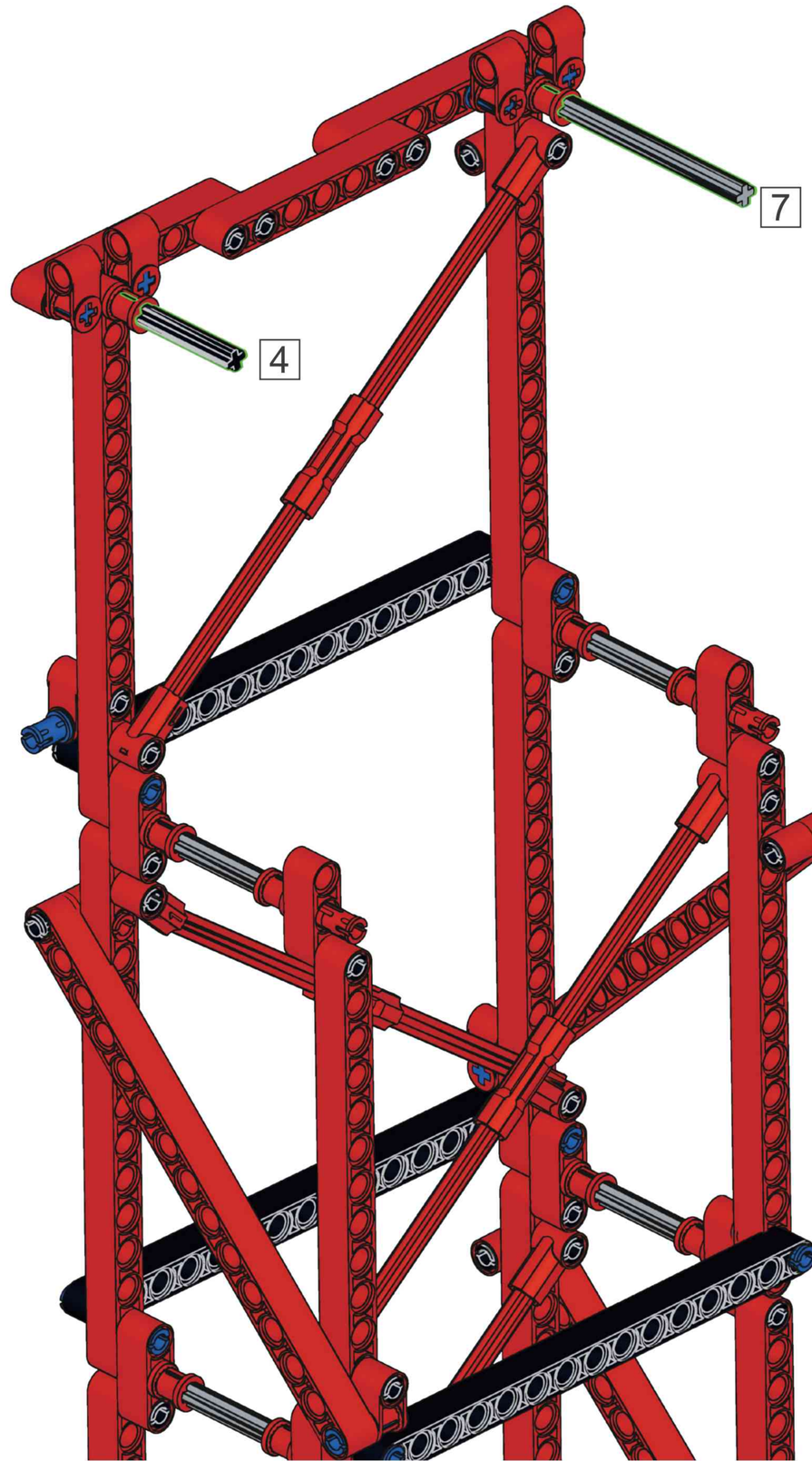

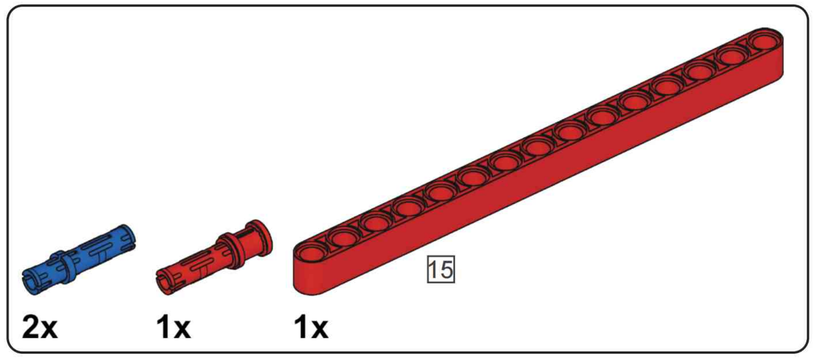

P90

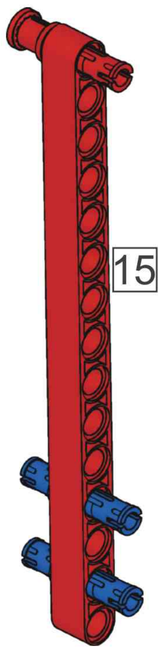

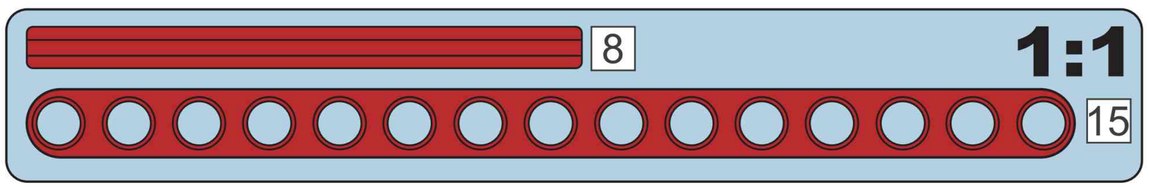

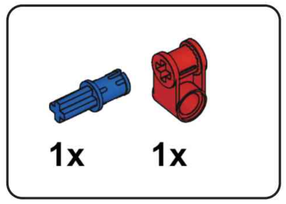

P91

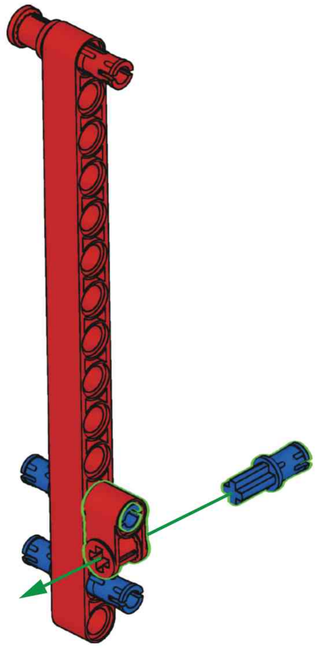

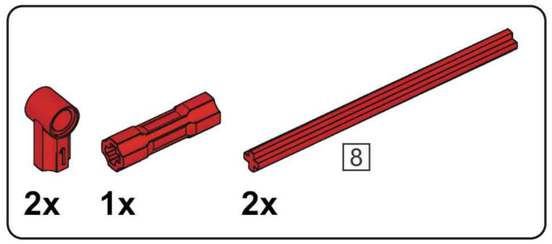

P92

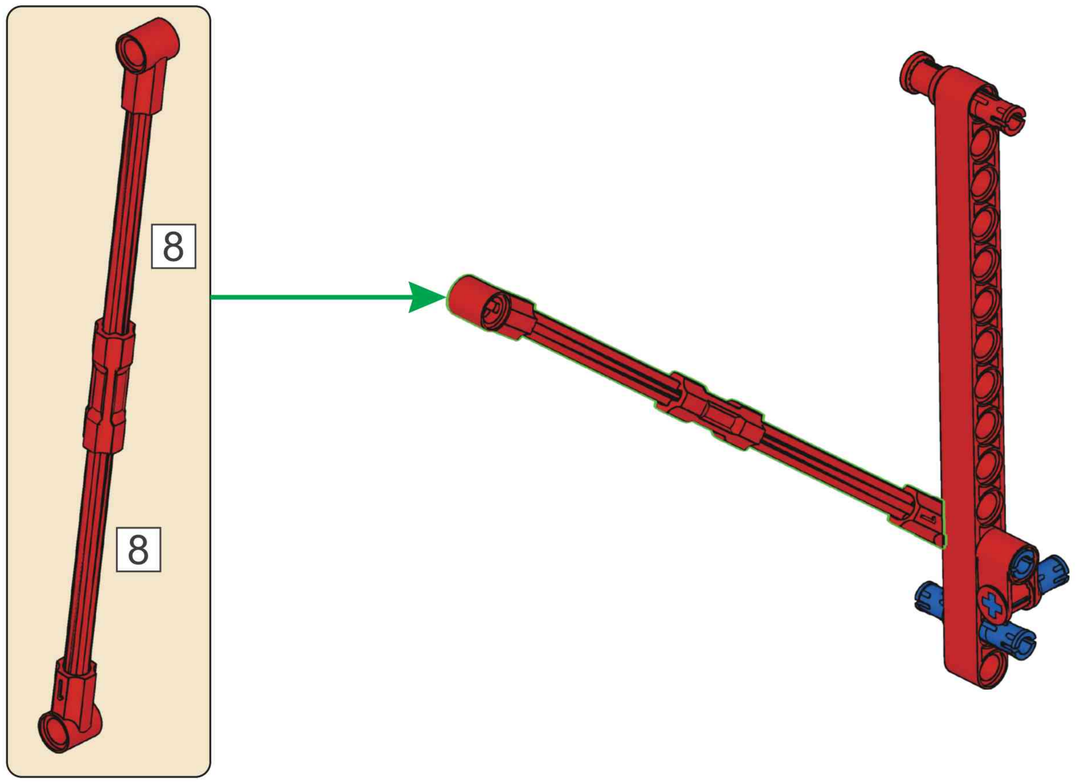

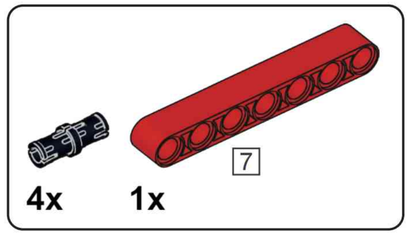

P93

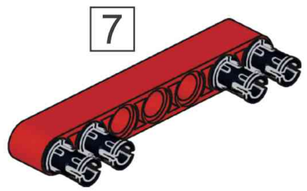

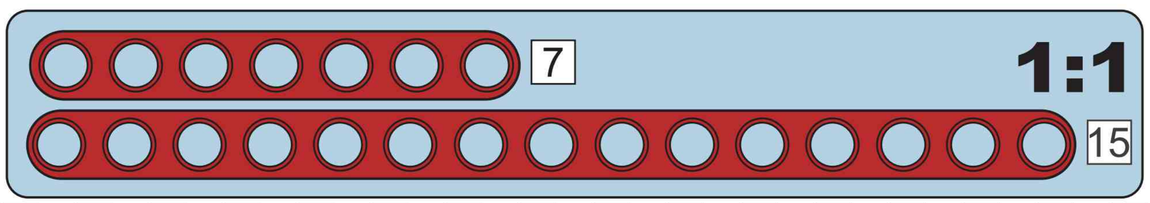

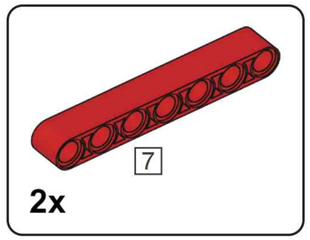

P94

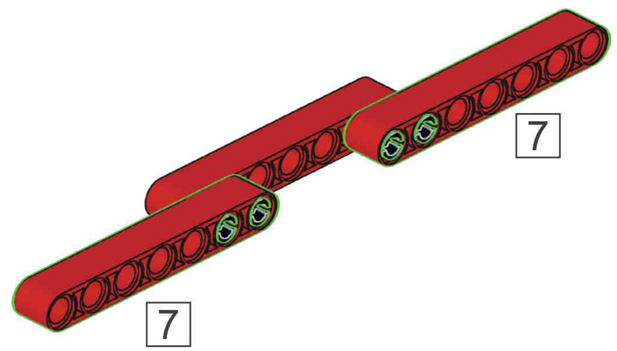

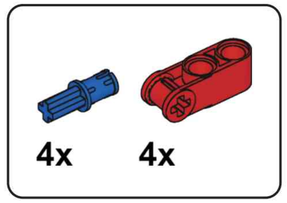

P95

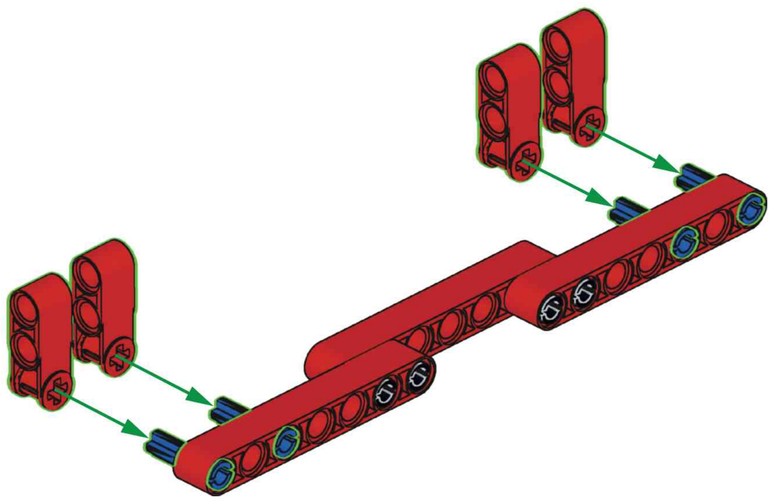

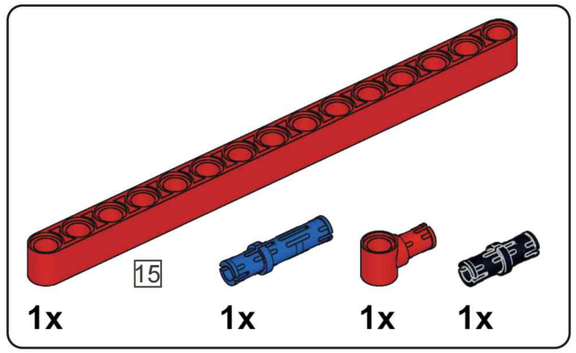

P96

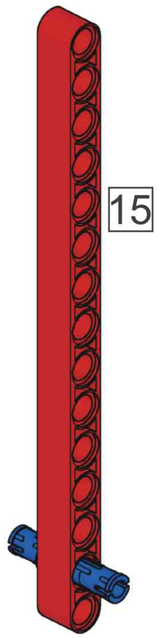

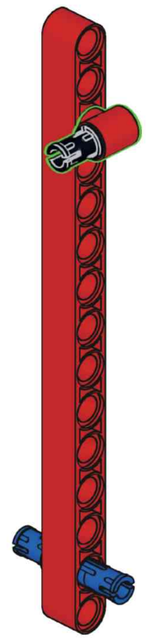

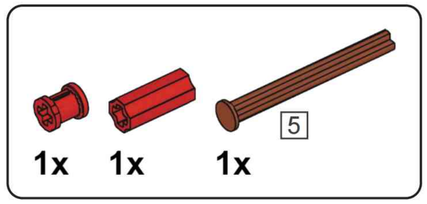

P97

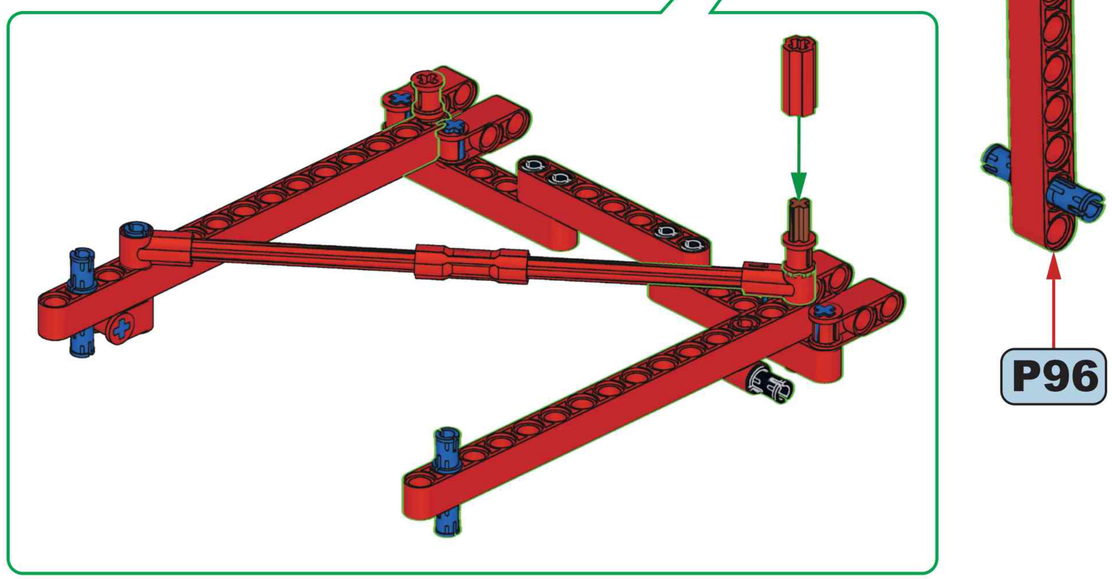

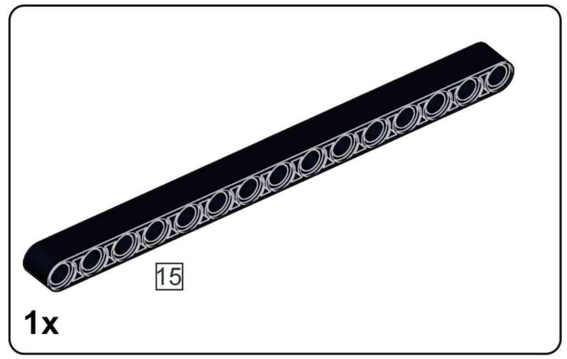

P98

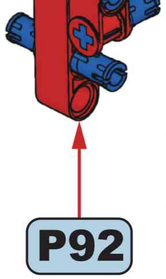

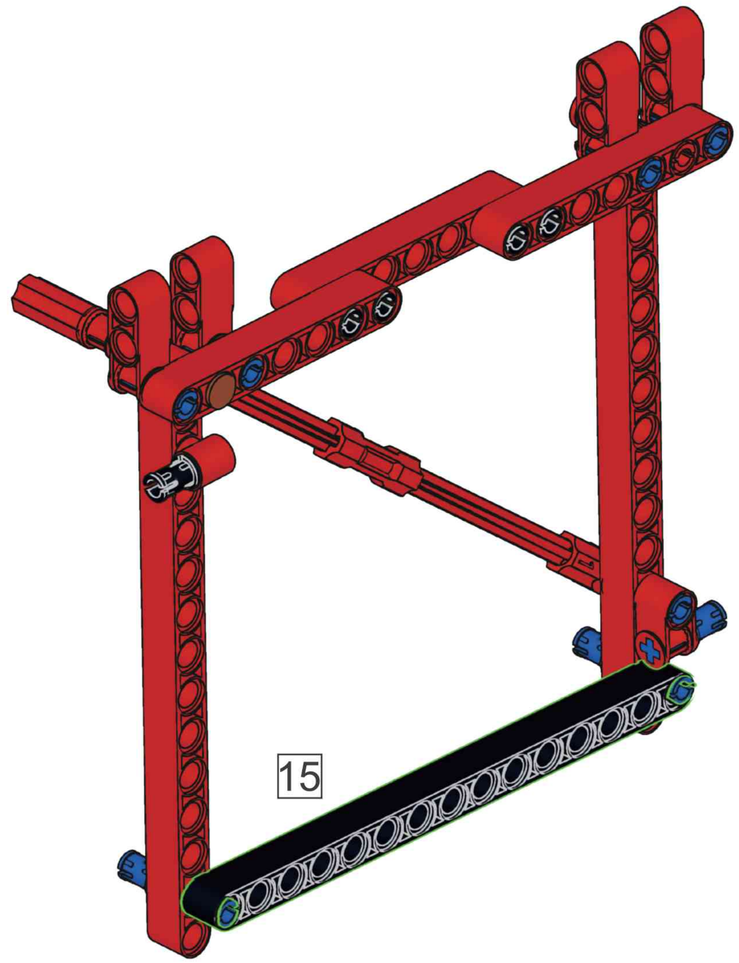

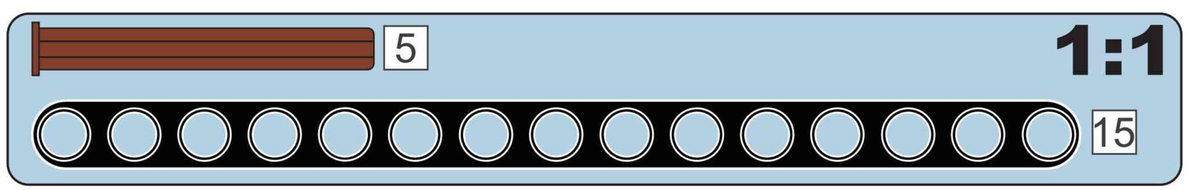

P99

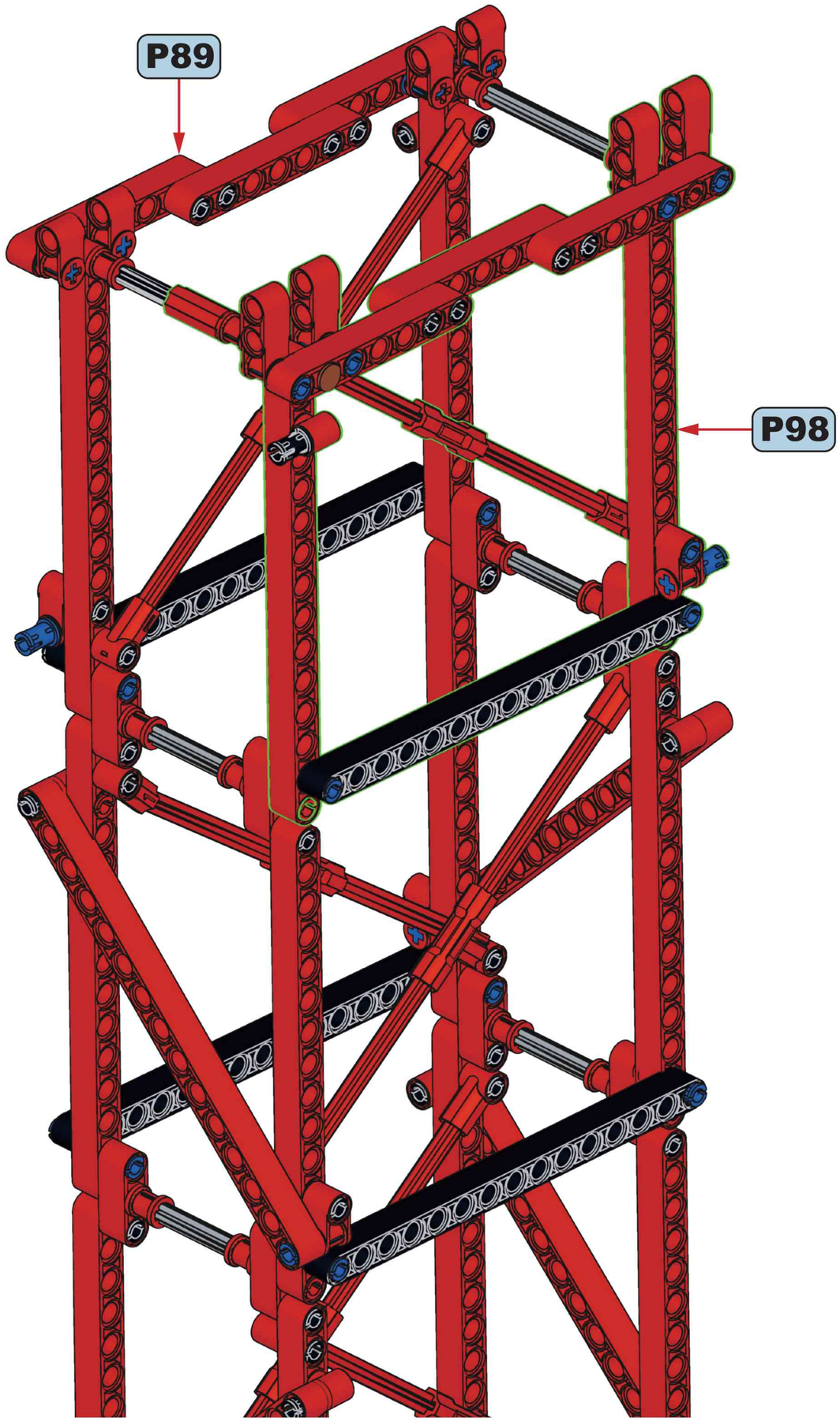

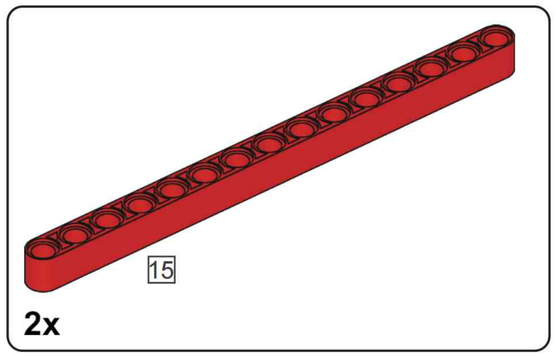

P100

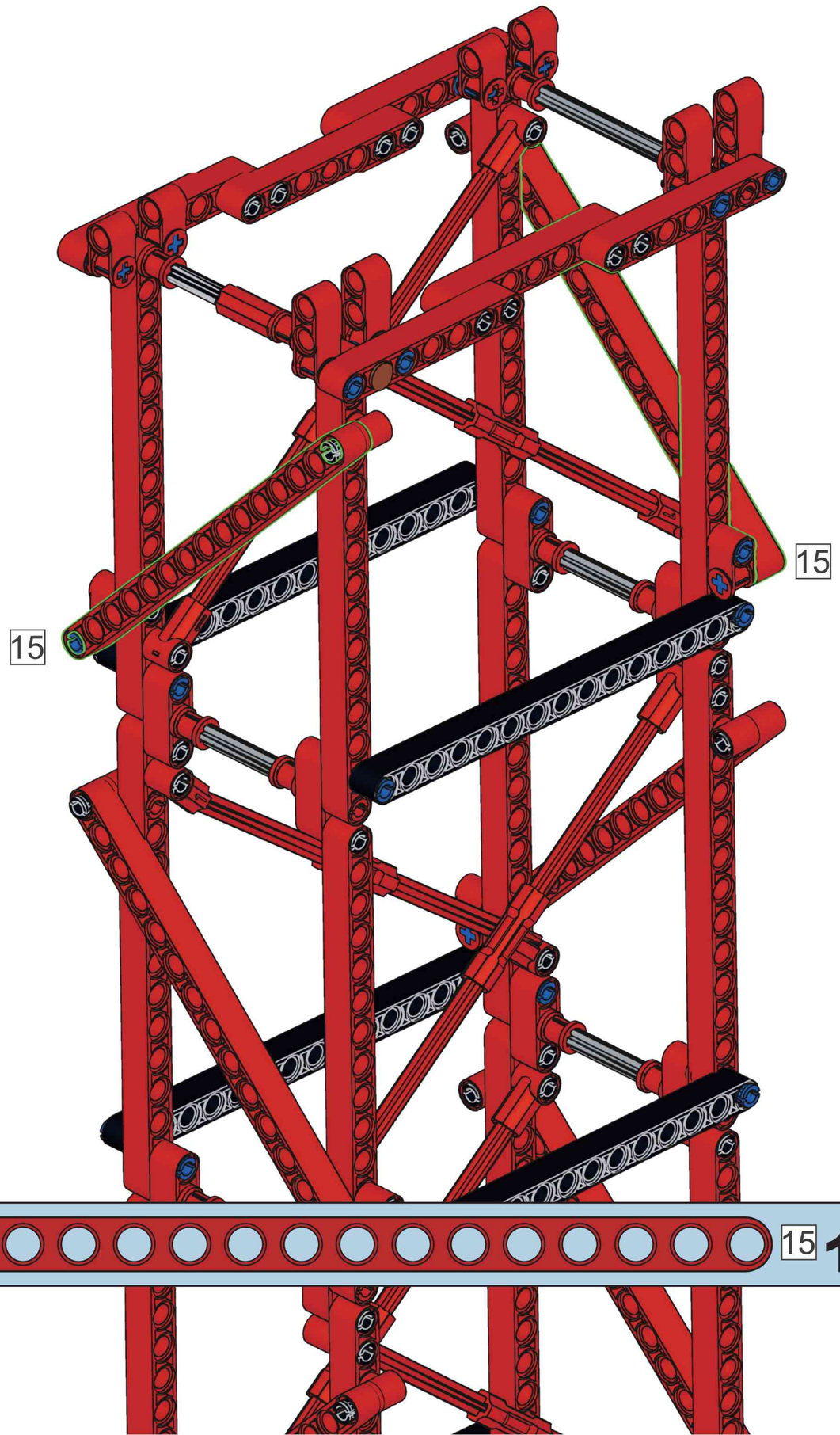

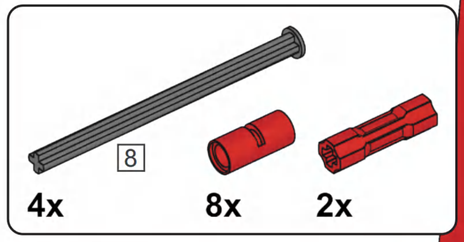

P101

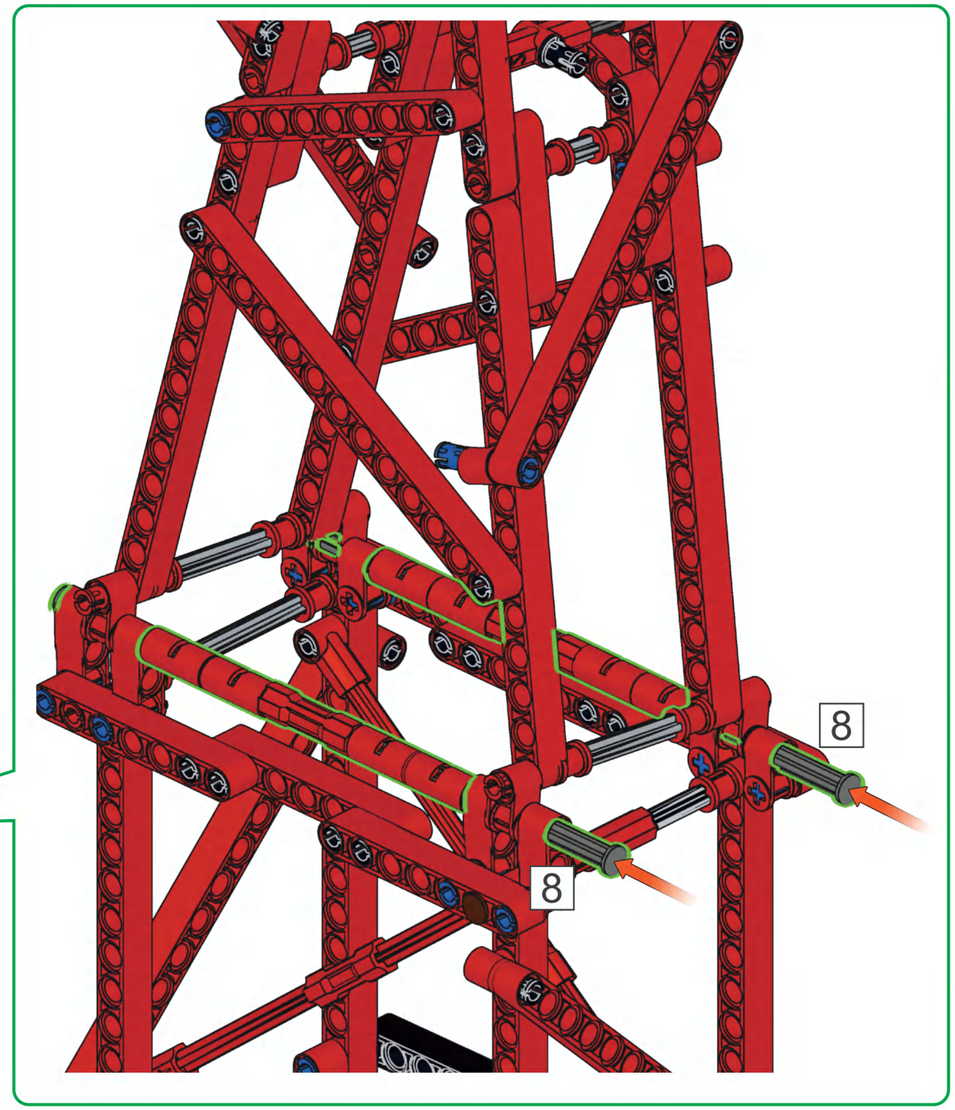

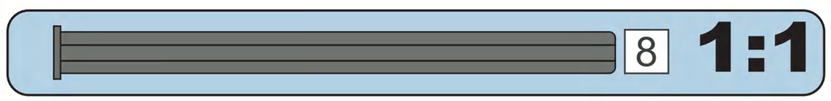

17

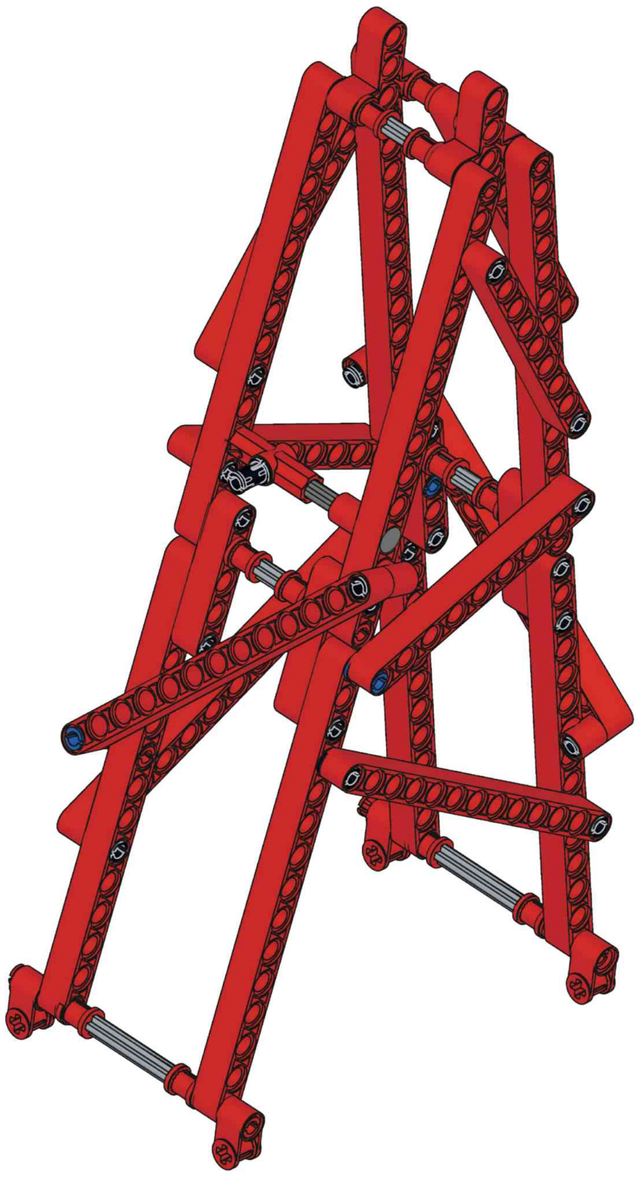

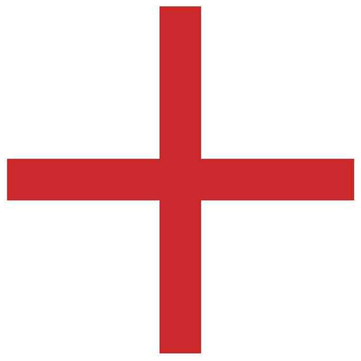

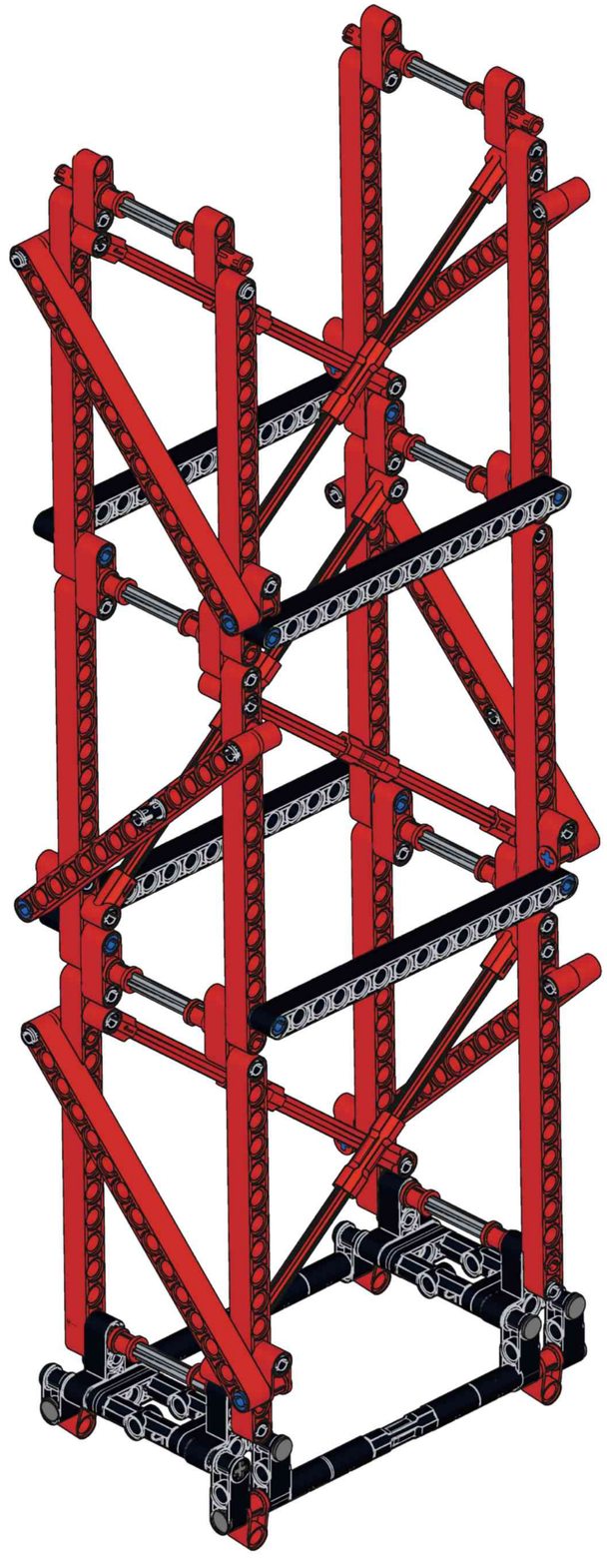

Q

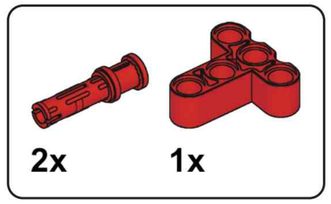

Q1

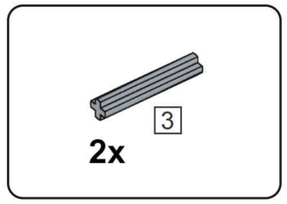

Q2

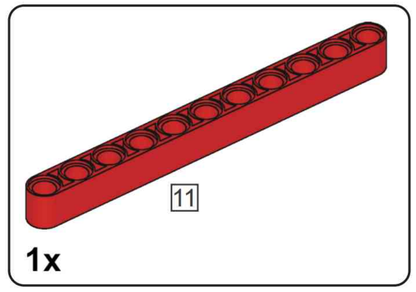

Q3

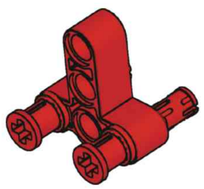

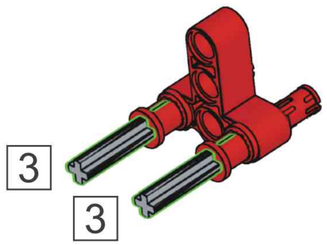



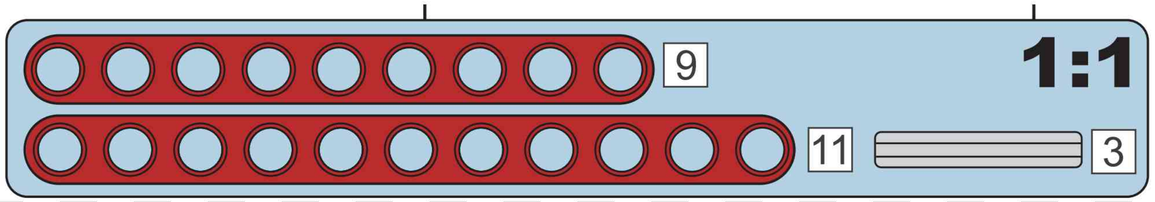

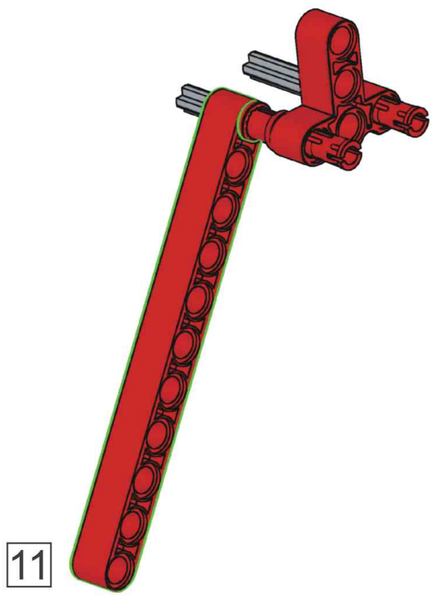

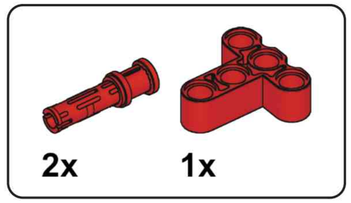

Q4

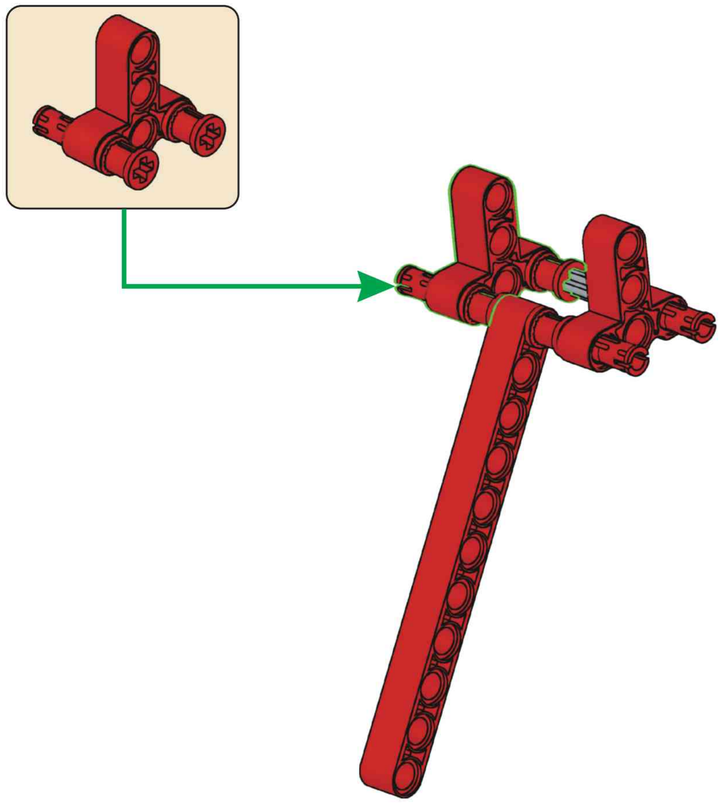

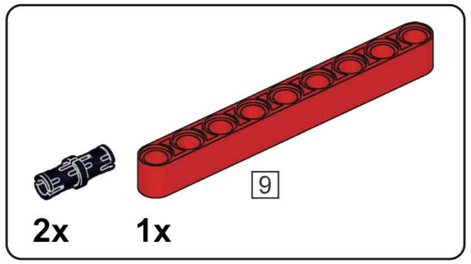

Q5

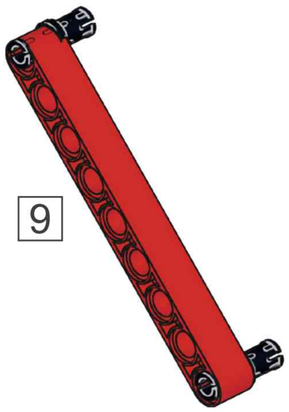

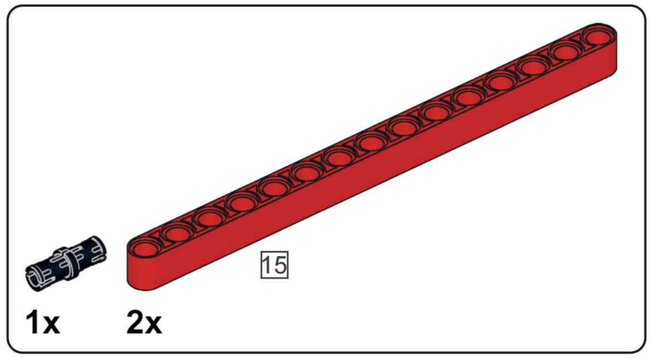

Q6

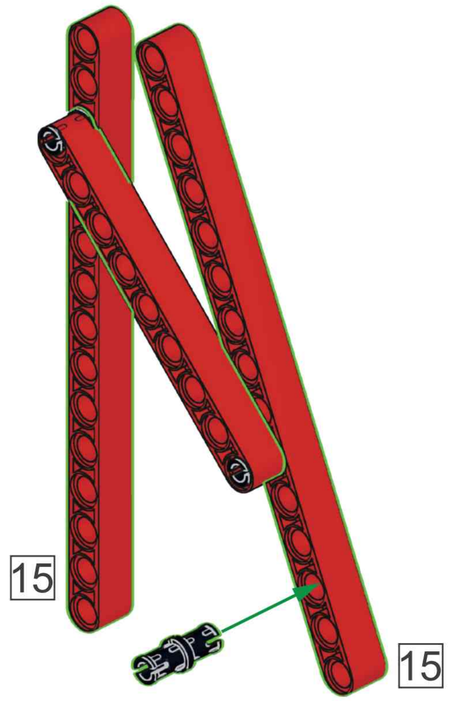

Q7

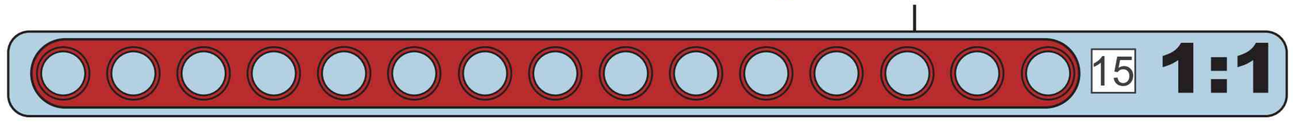

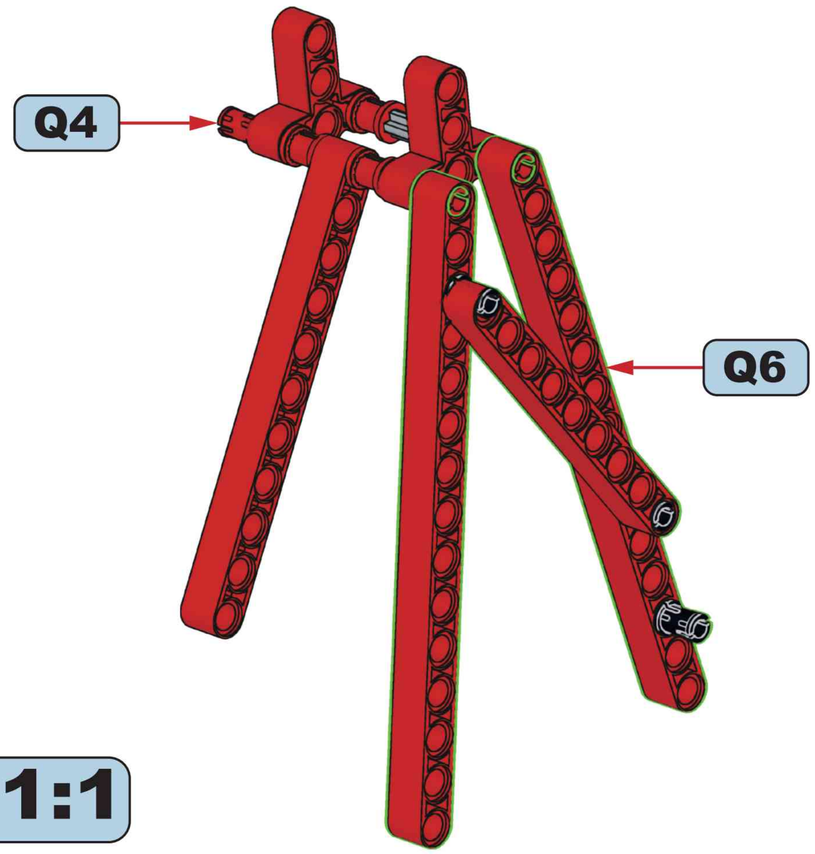

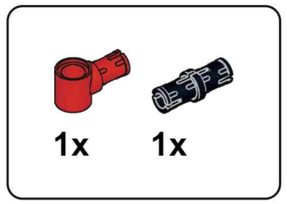

Q8

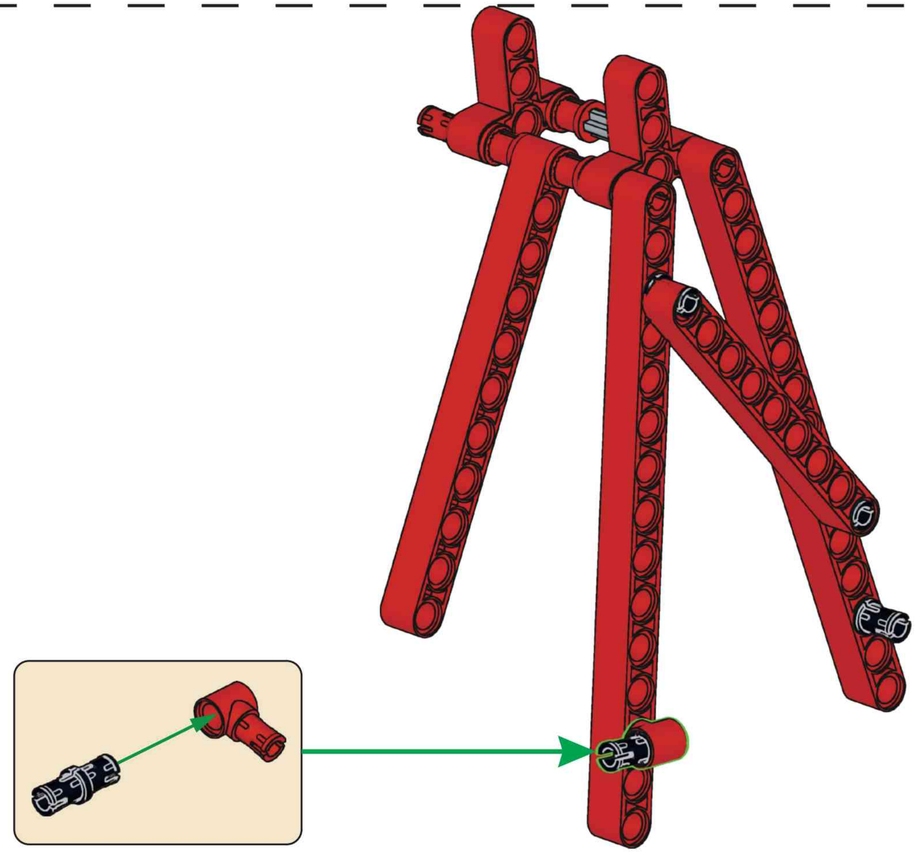

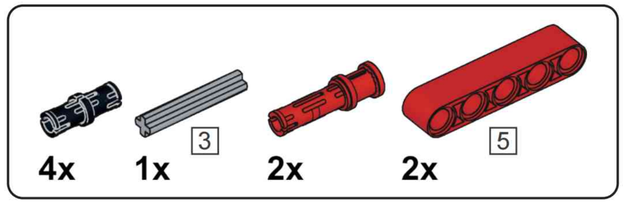

Q9

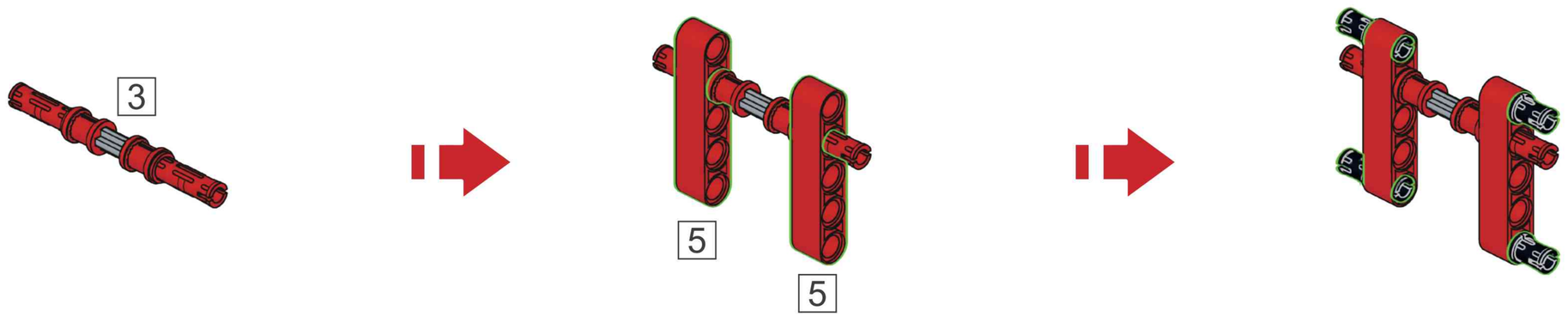

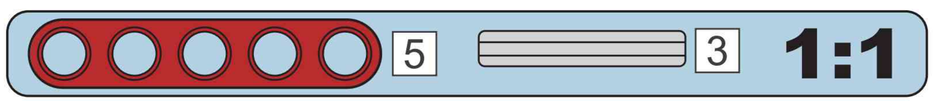

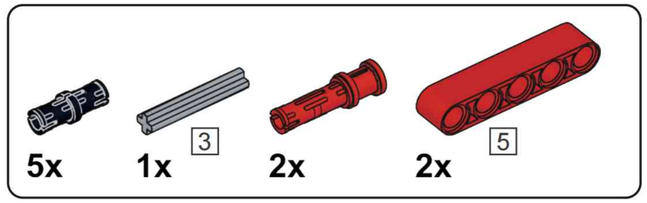

Q10

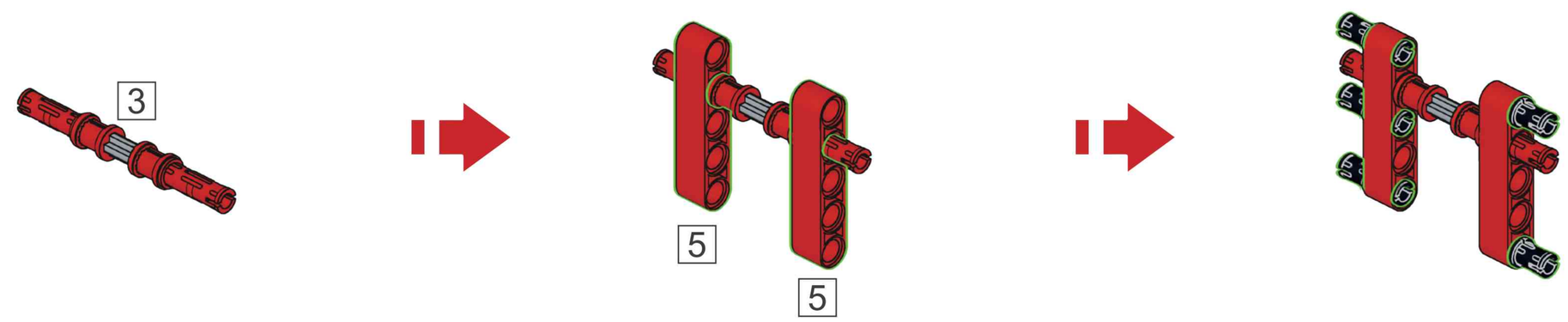

Q11

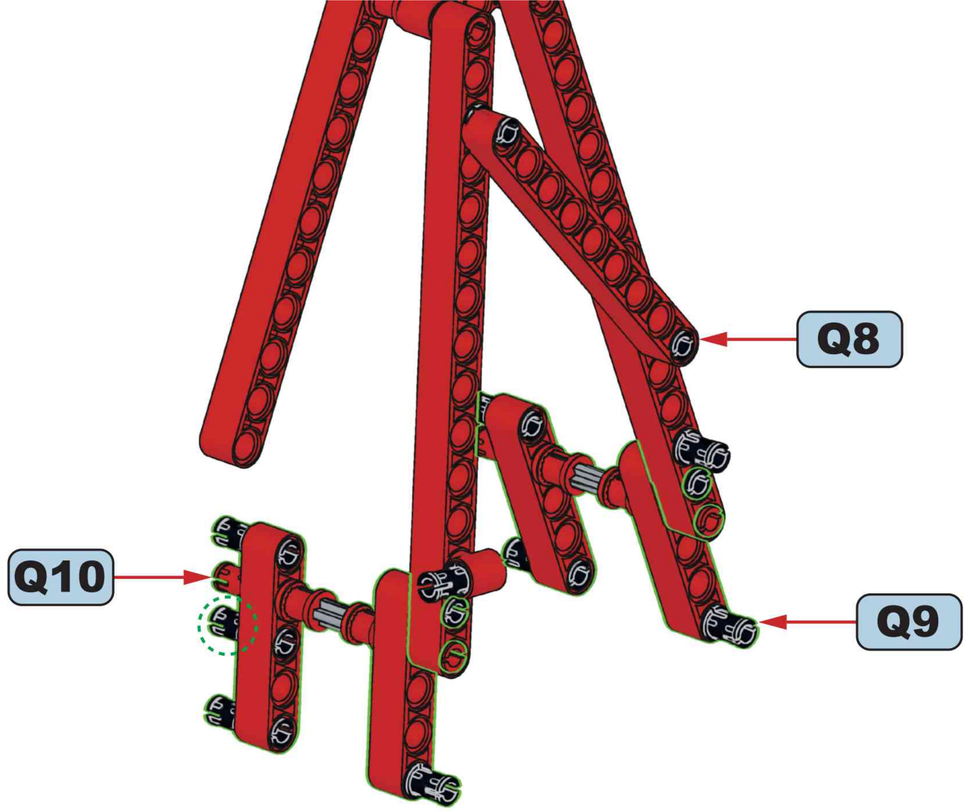

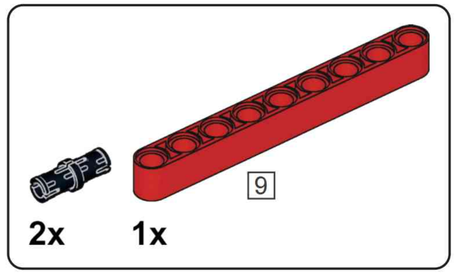

Q12

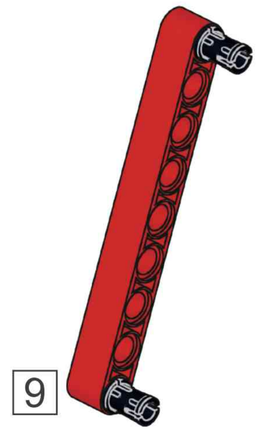

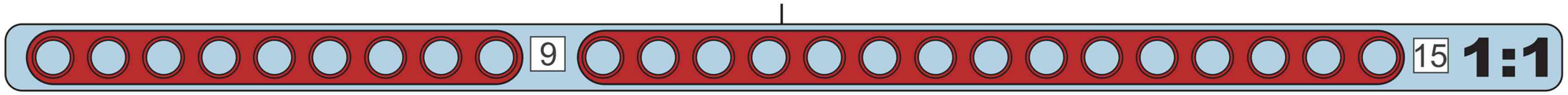

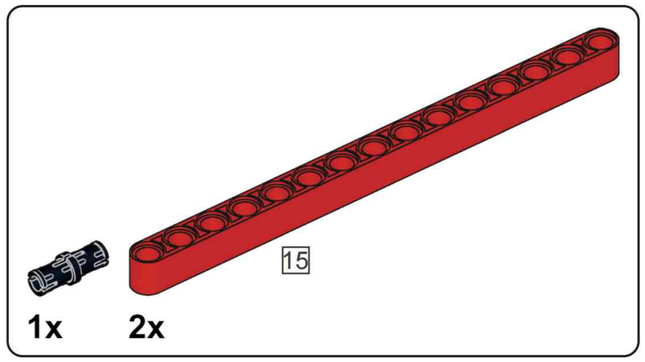

Q13

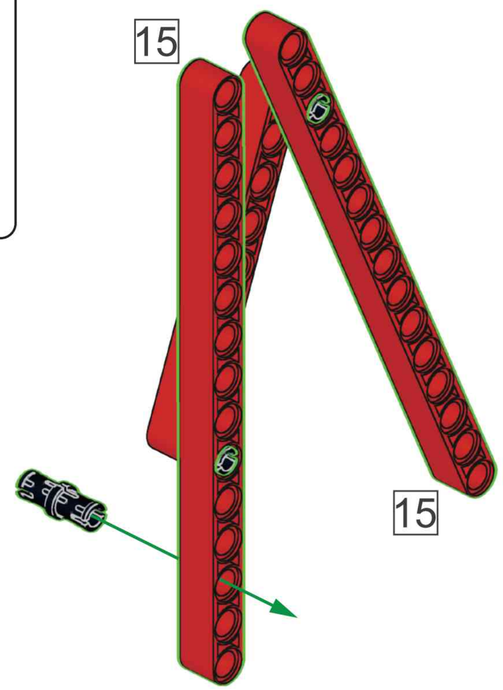

Q14

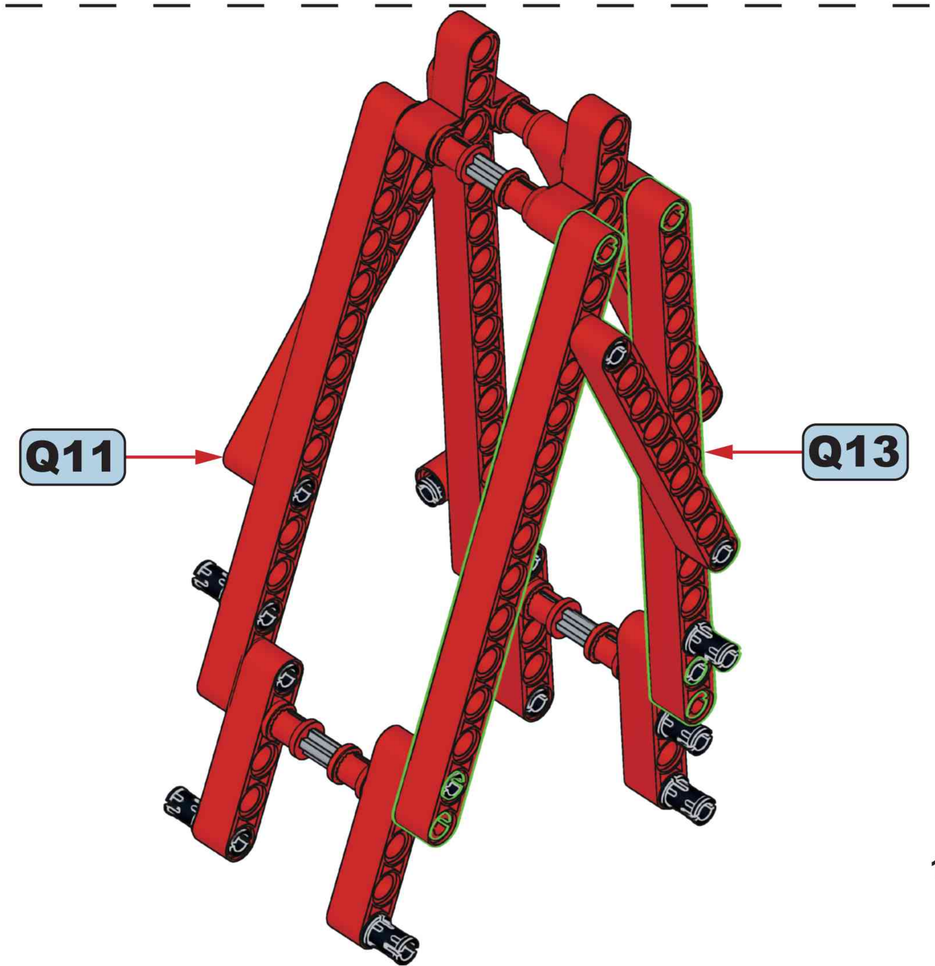

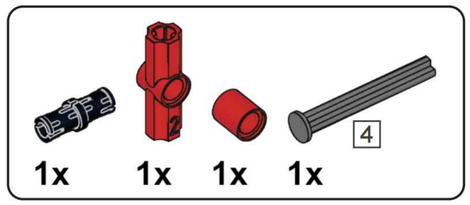

Q15

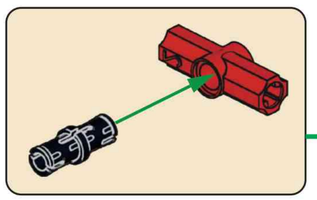

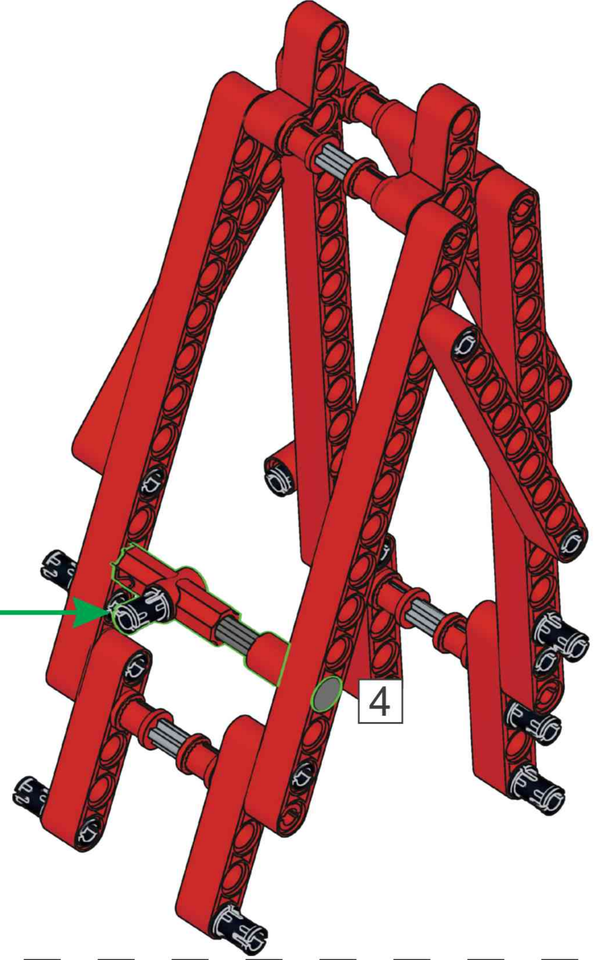

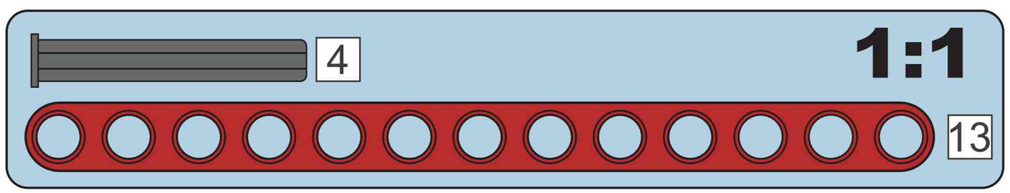

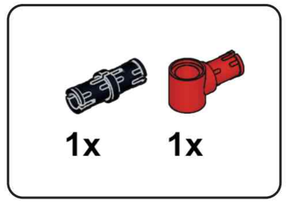

Q16

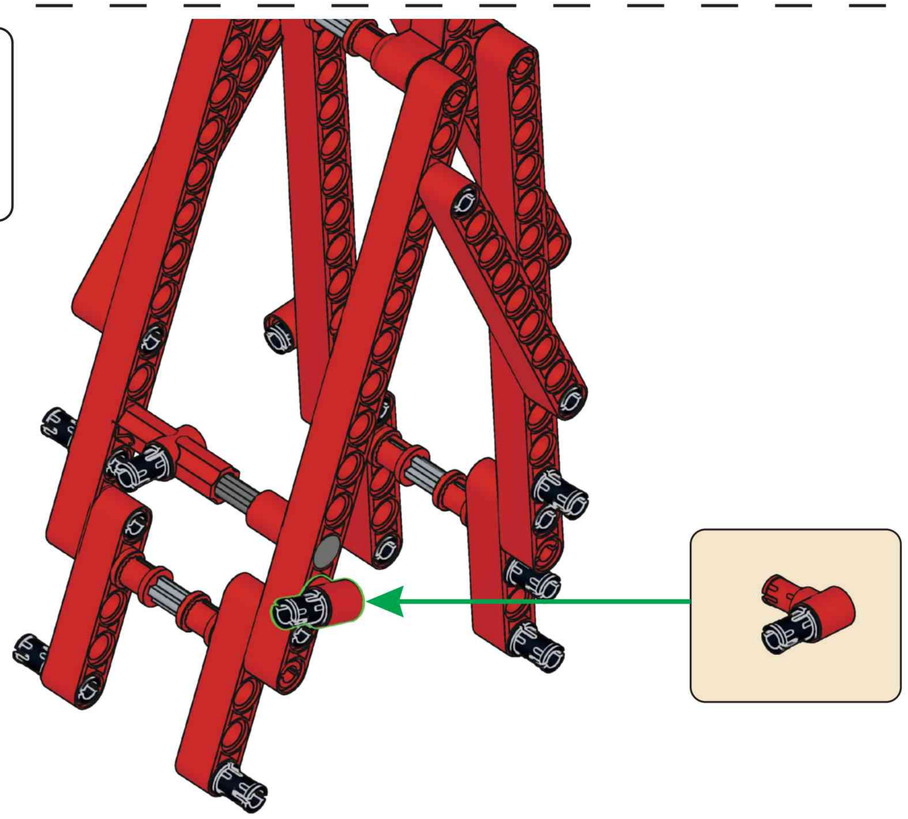

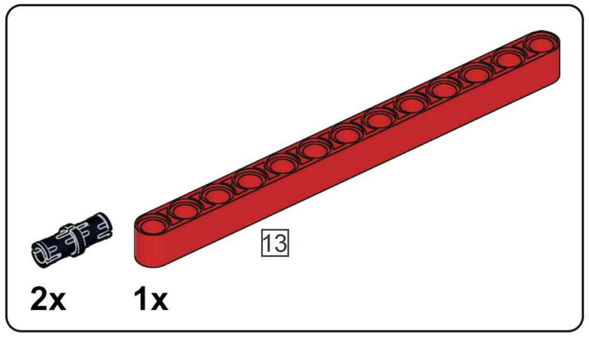

Q17



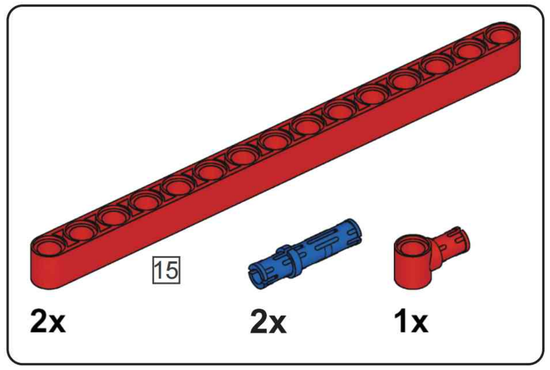

Q18

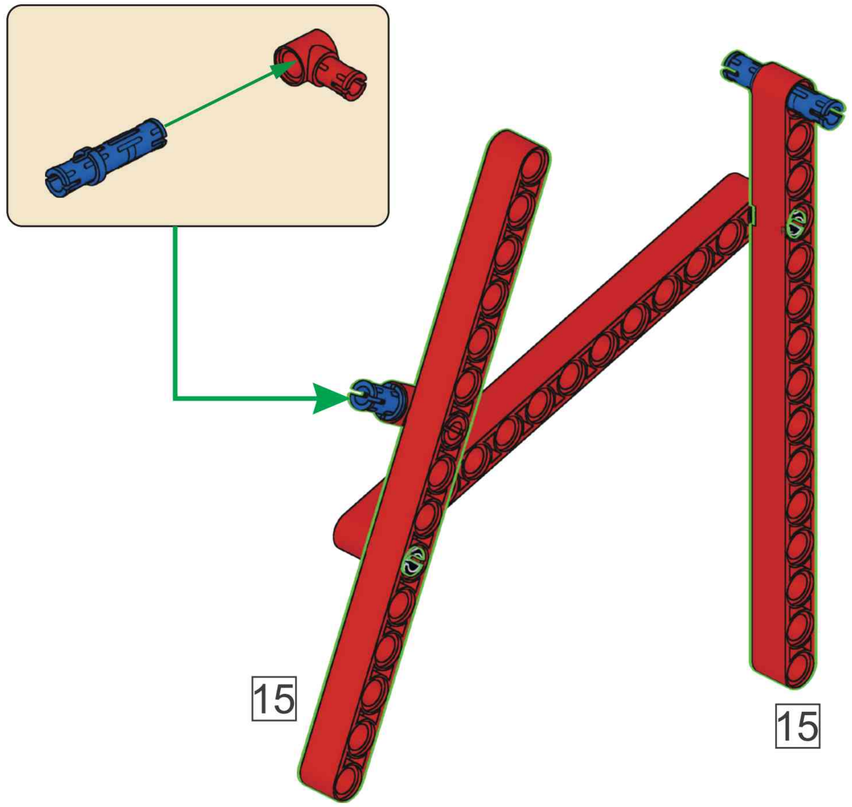

Q19

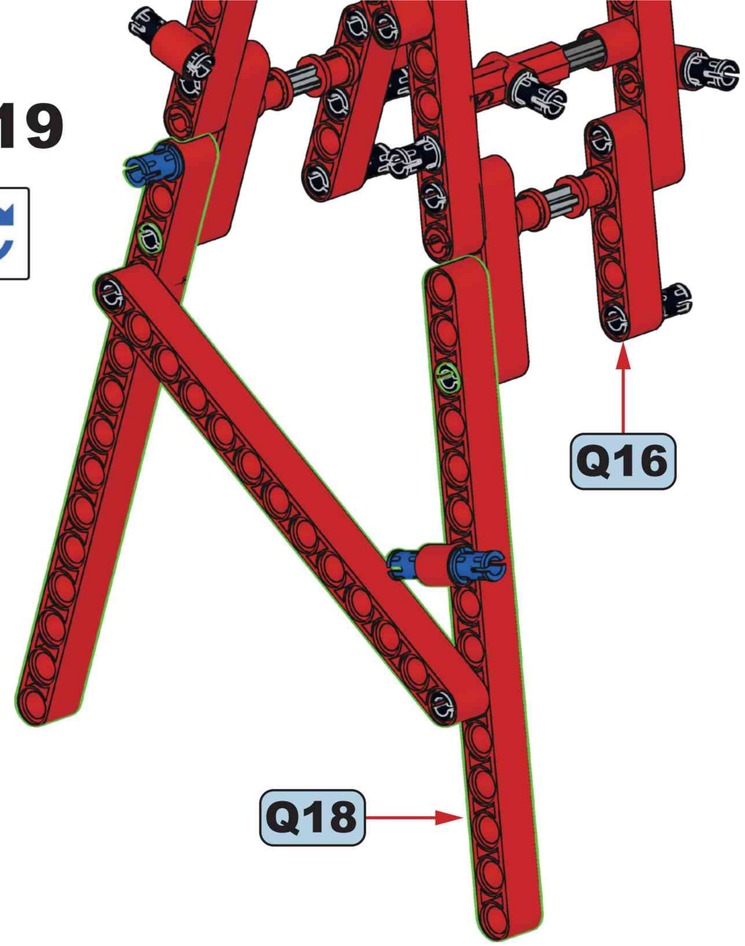

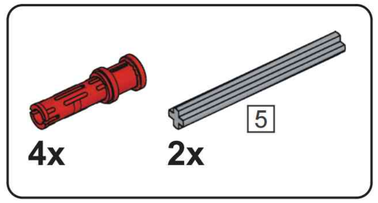

Q20

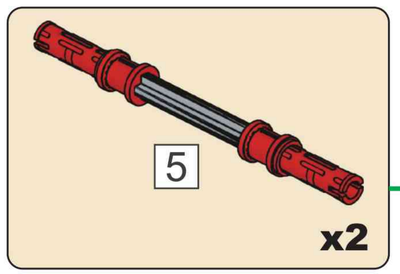

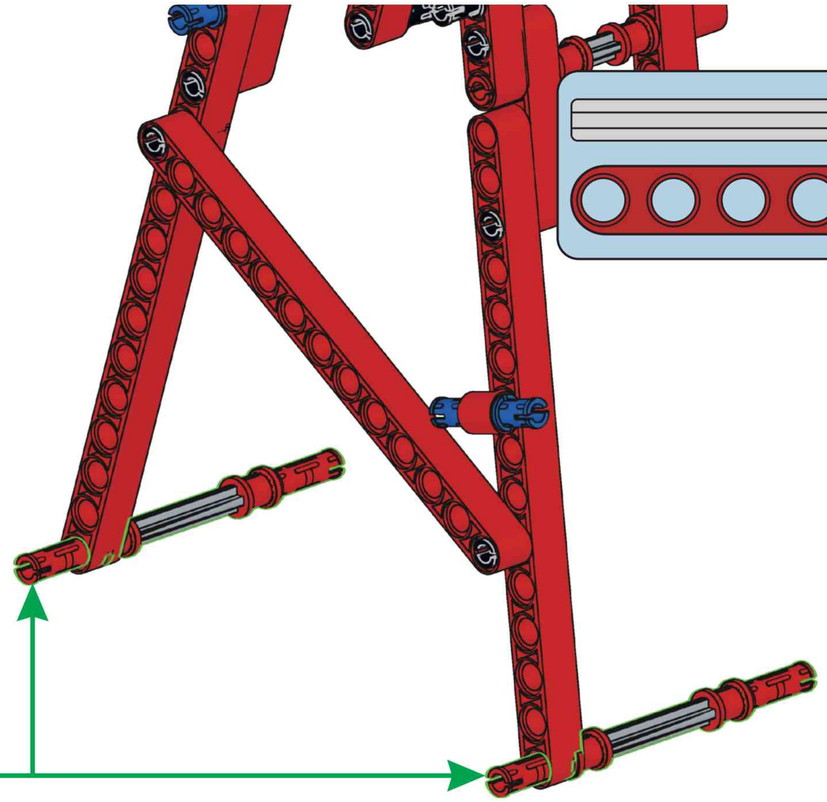

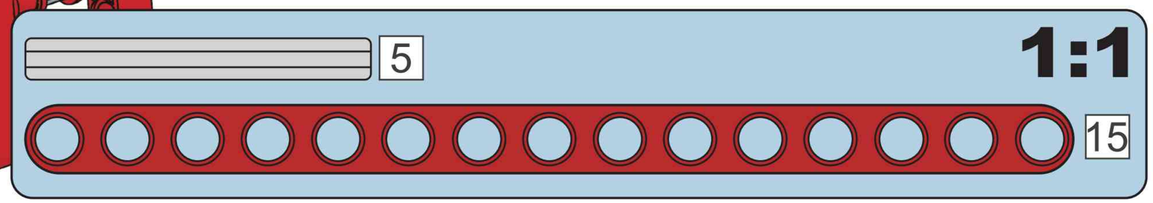

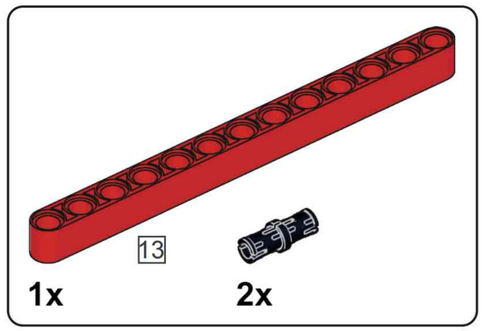

Q21

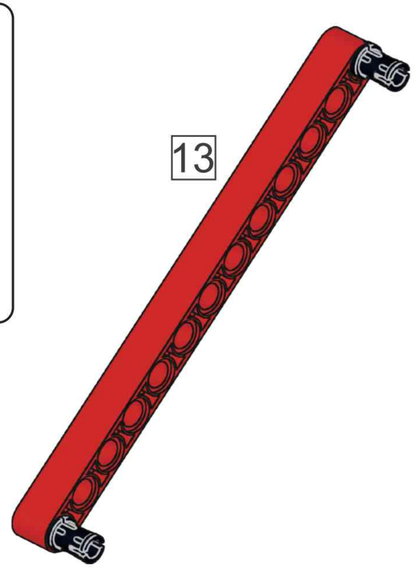

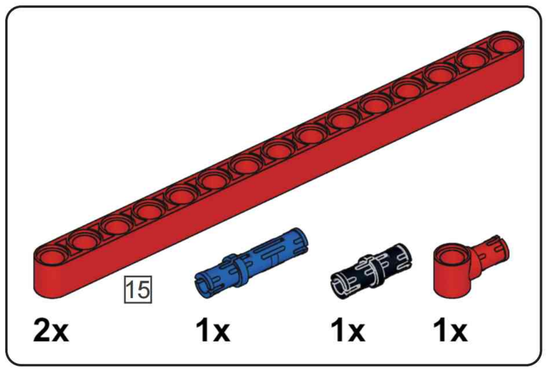

Q22

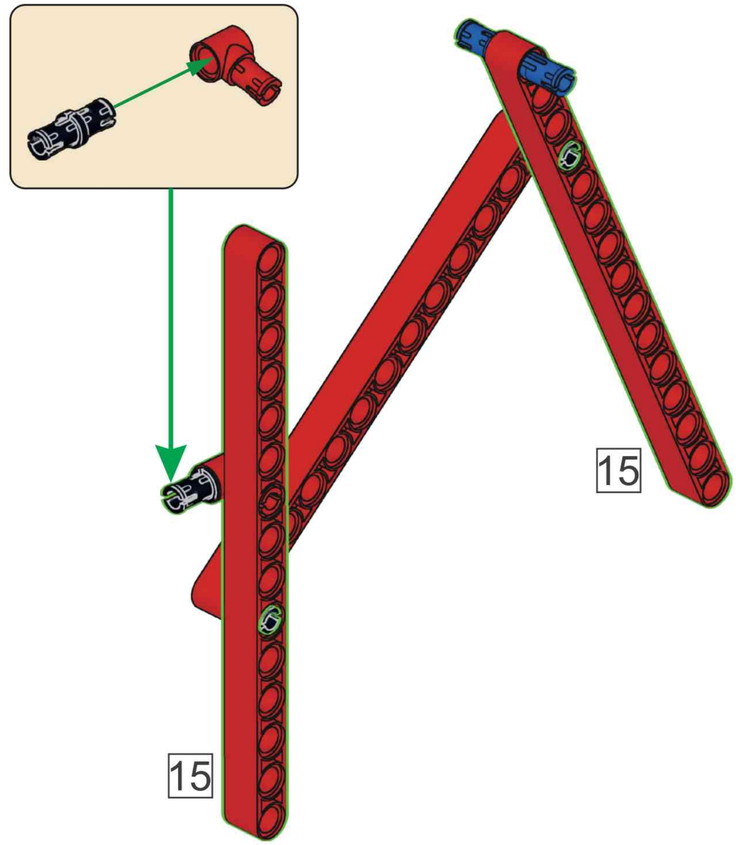

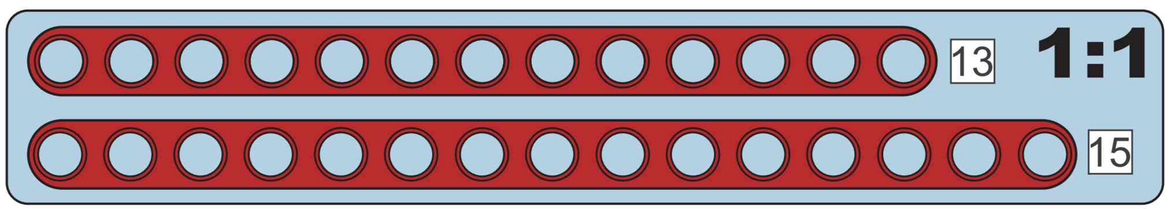

Q23

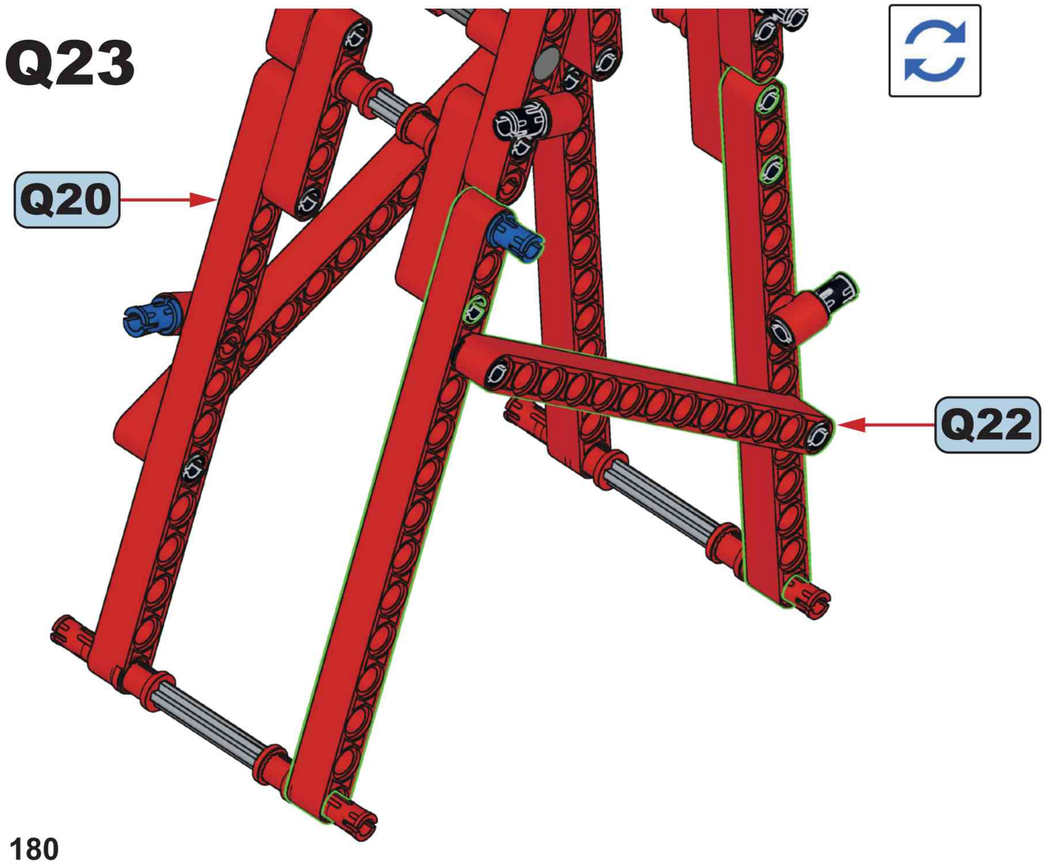

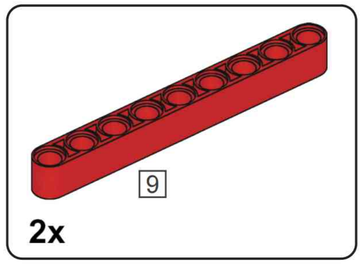

Q24

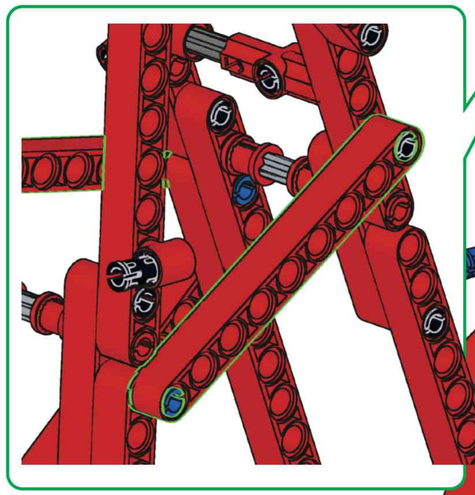

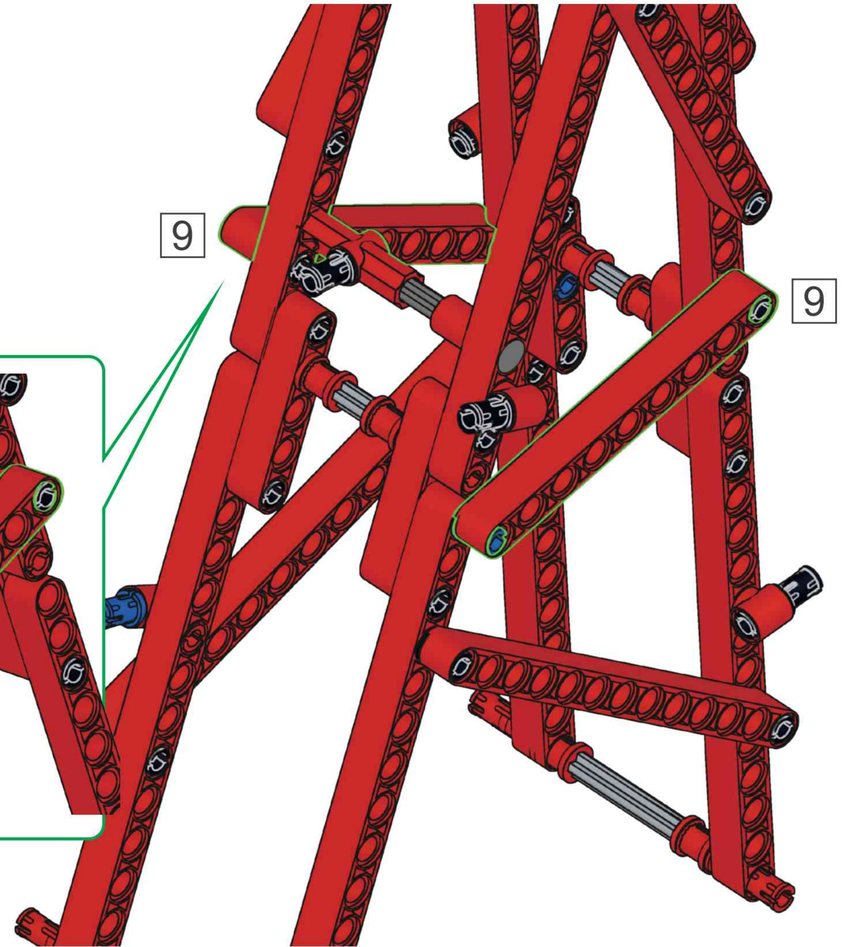

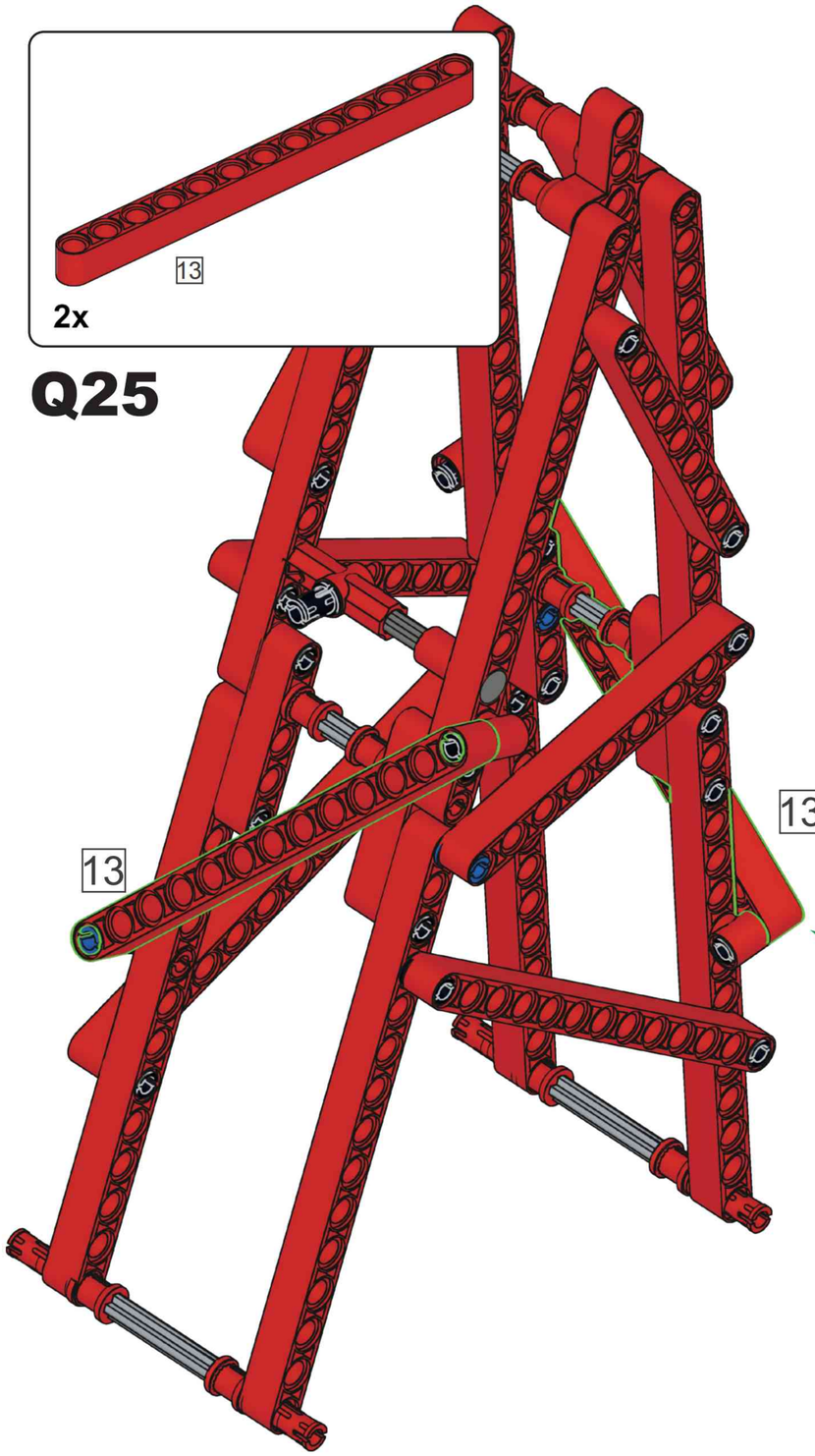

Q25

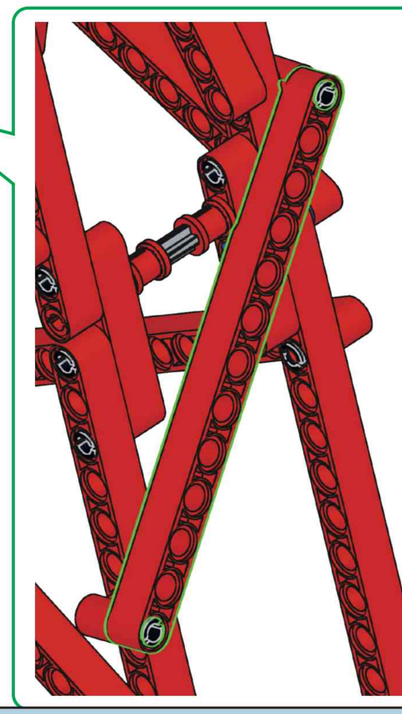

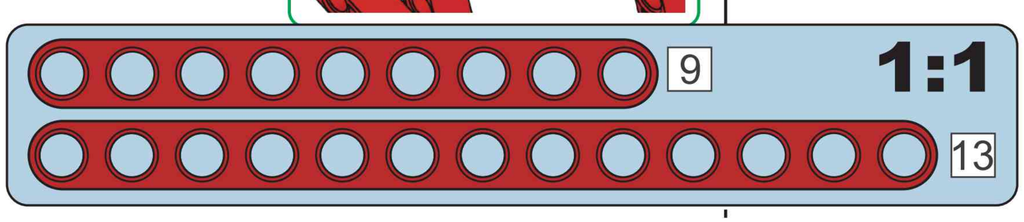

Q26



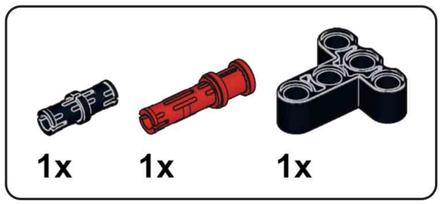

Q27

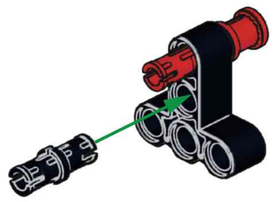

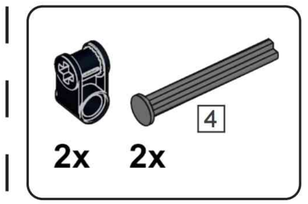

Q28

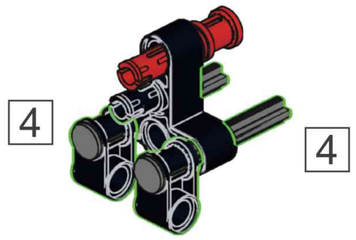

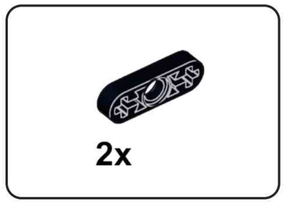

Q29

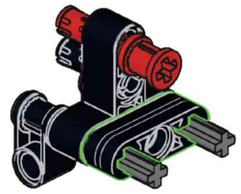

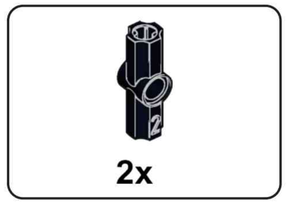

Q30

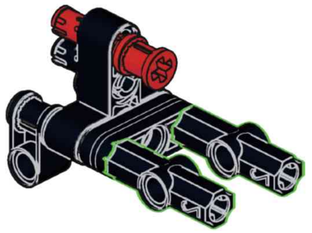

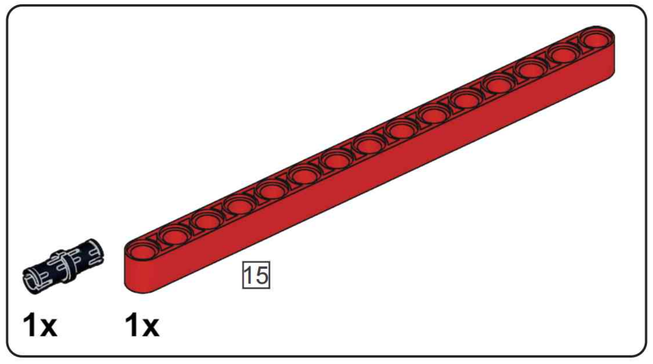

Q31

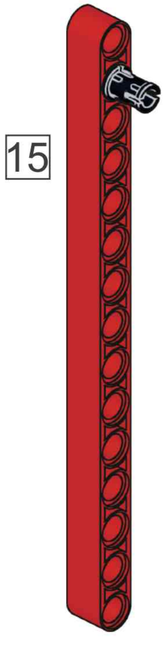

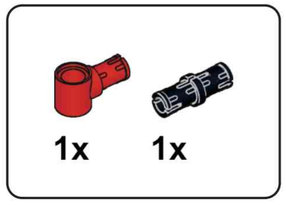

Q32

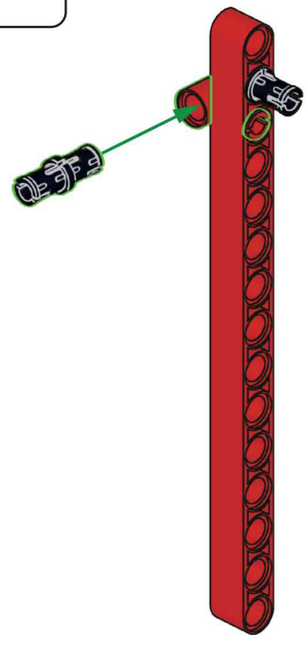

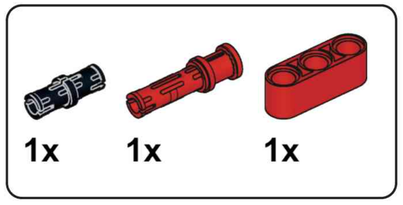

Q33

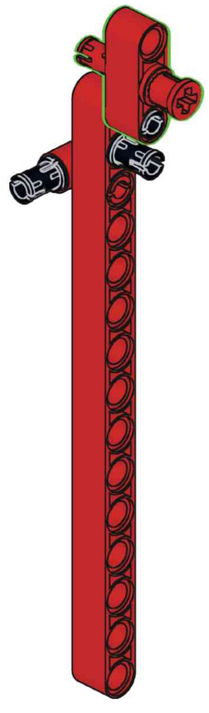

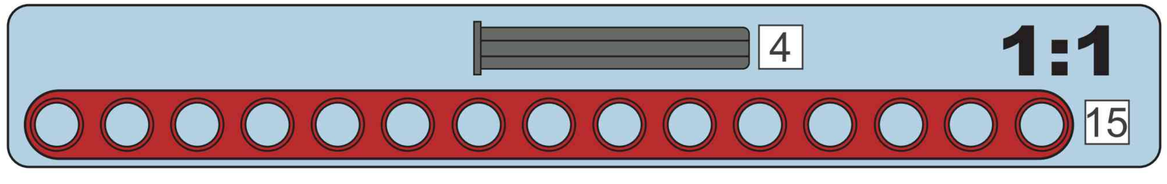

Q34

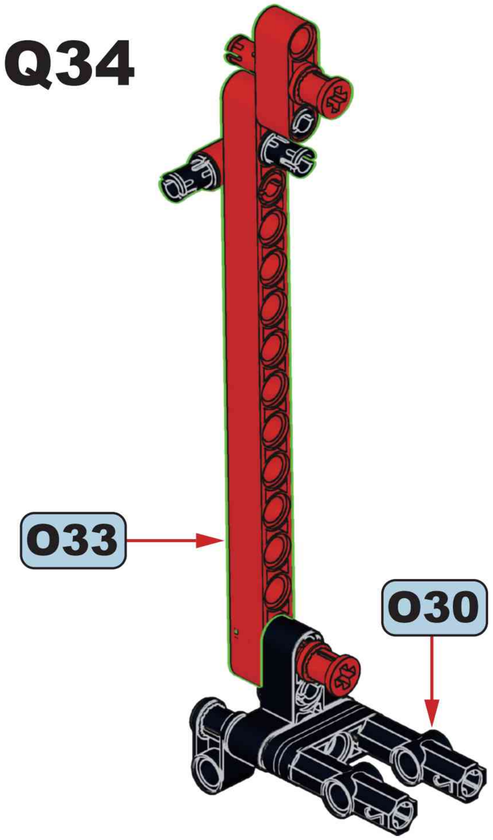



Q35

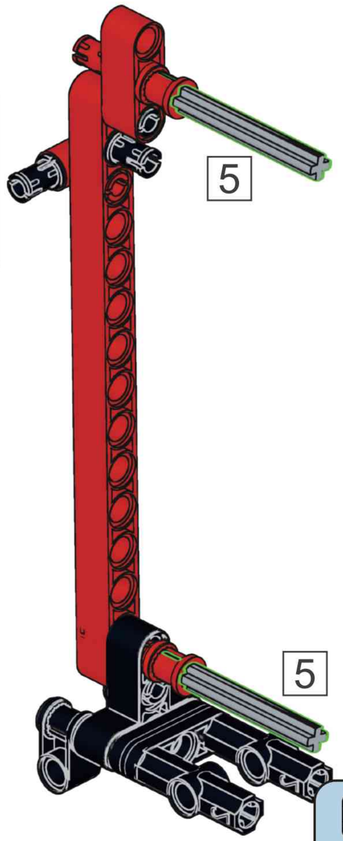

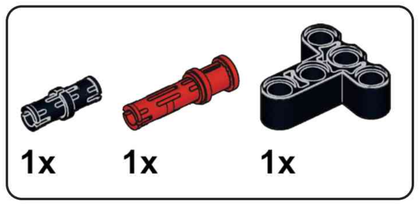

Q36

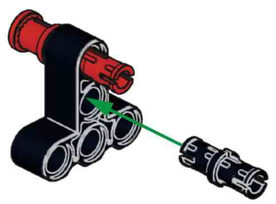

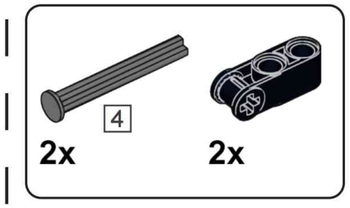

Q37

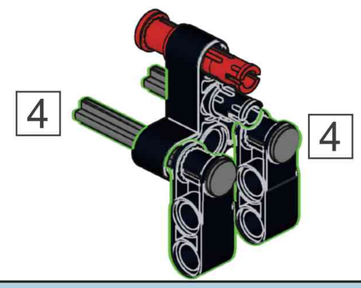

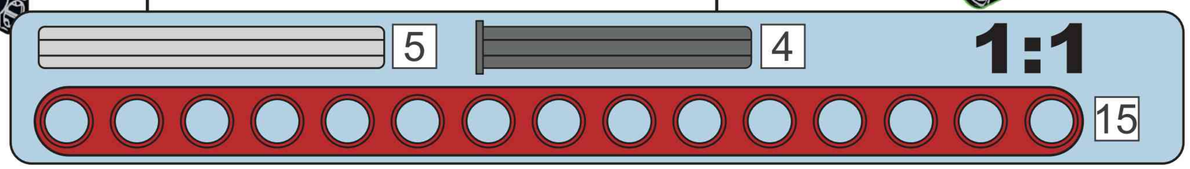

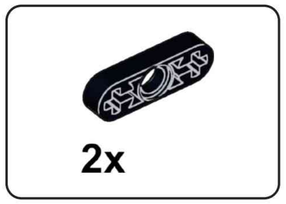

Q38

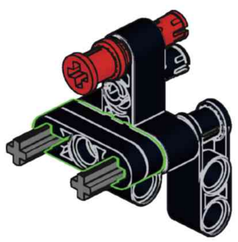

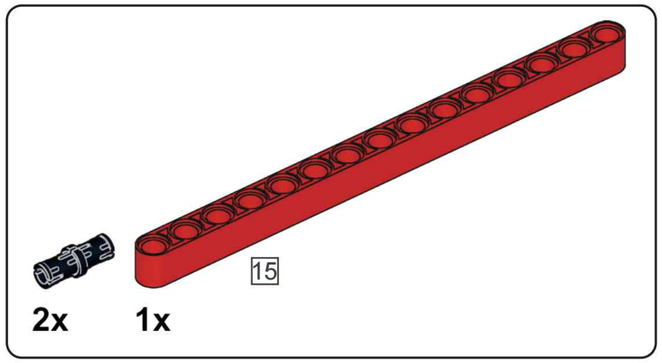

Q39

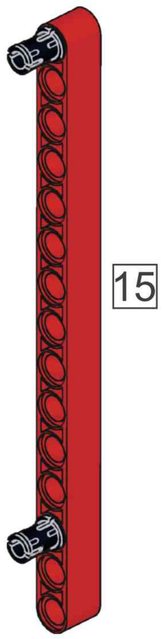

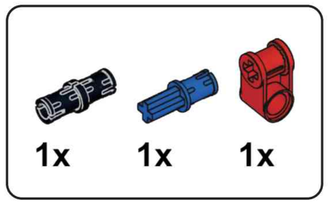

Q40

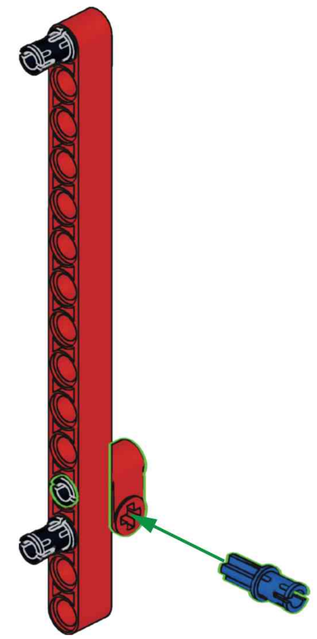

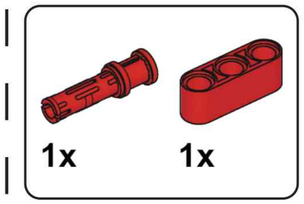

Q41

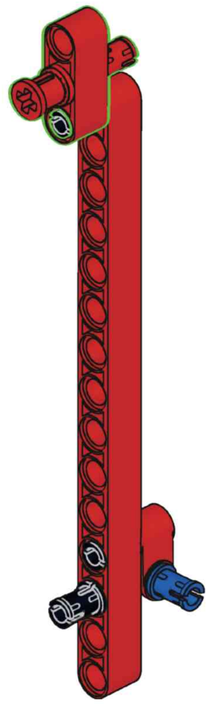

Q42

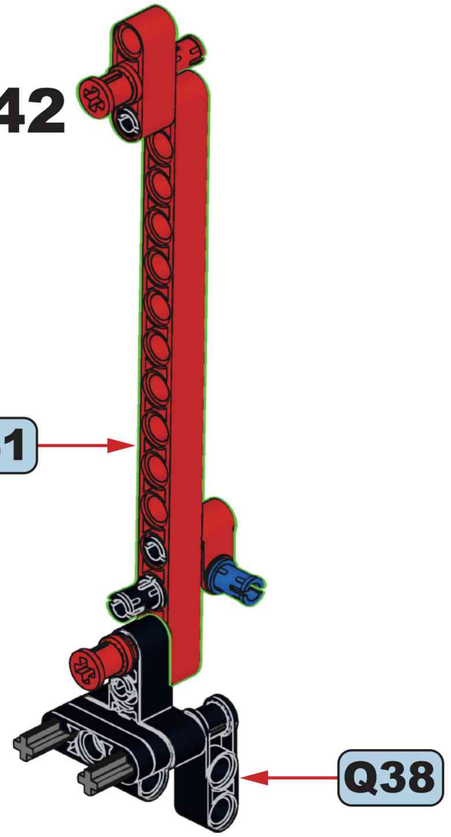

Q43

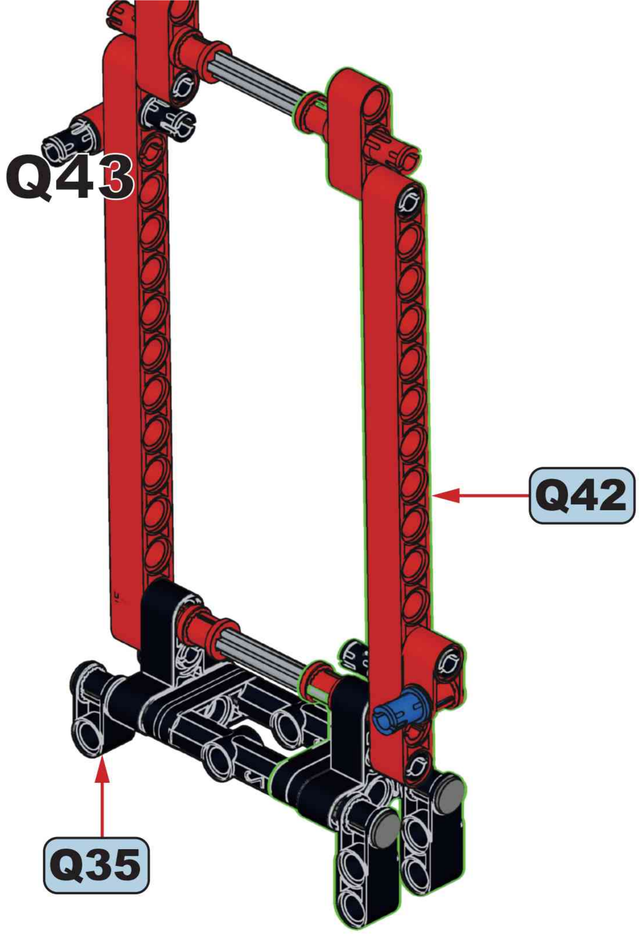

Q44

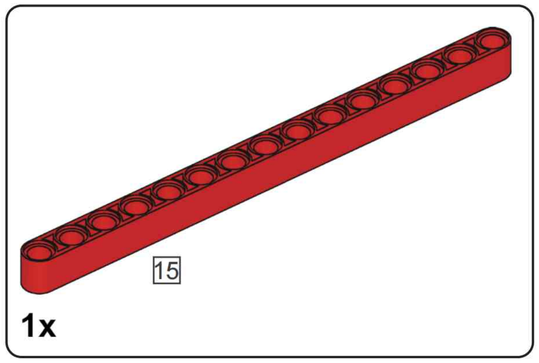

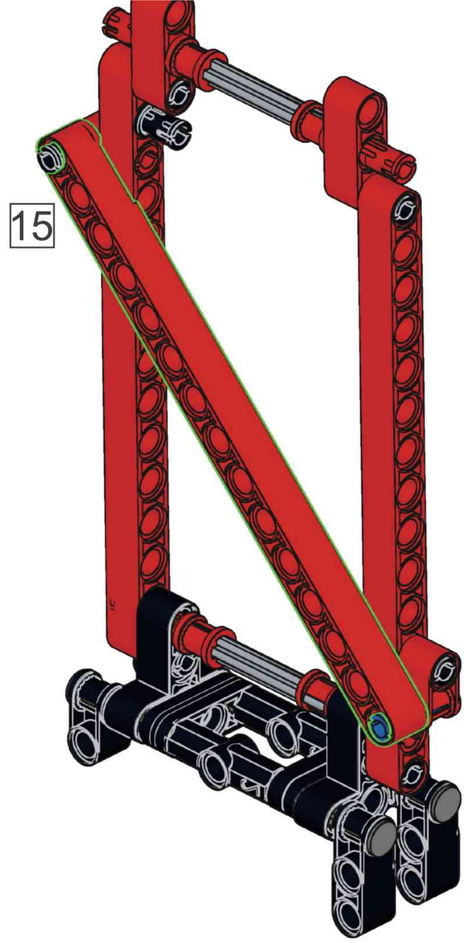

Q45

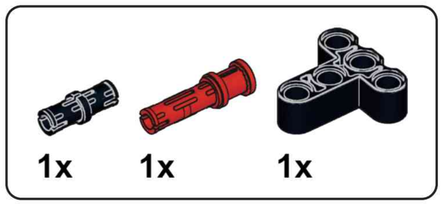

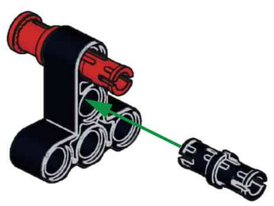

Q46

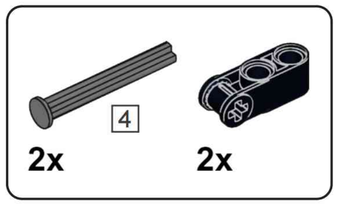

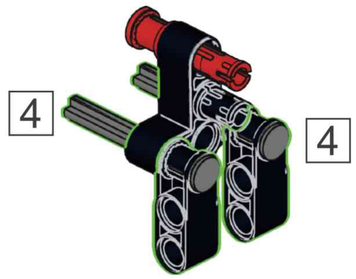

Q47

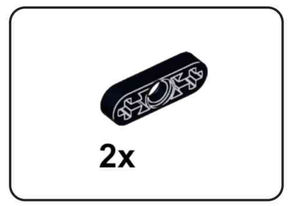

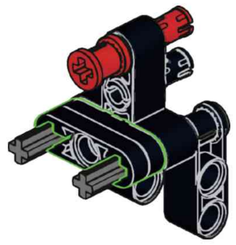

Q48

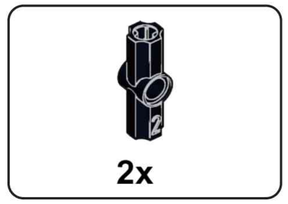

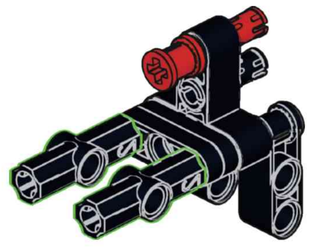

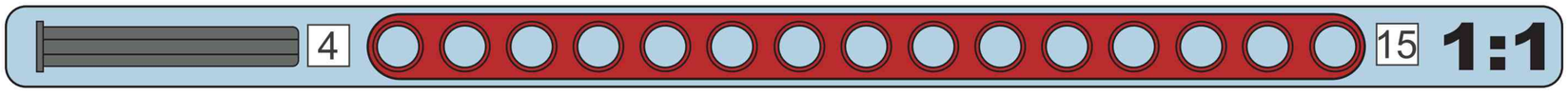

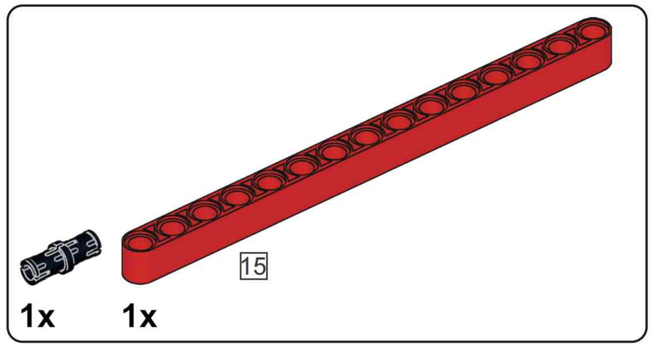

Q49

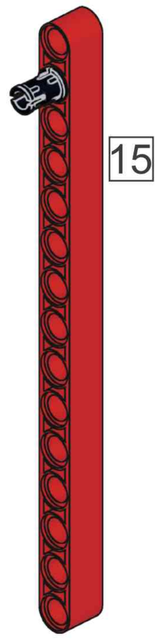

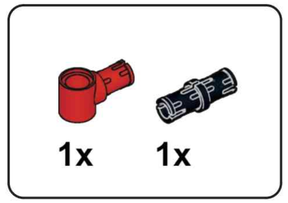

Q50

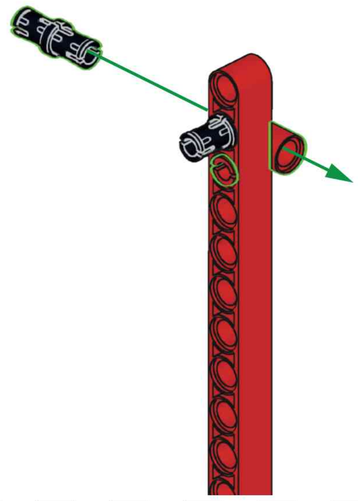

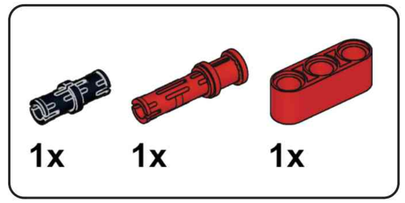

Q51

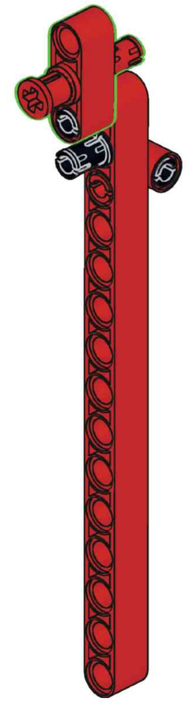

Q52

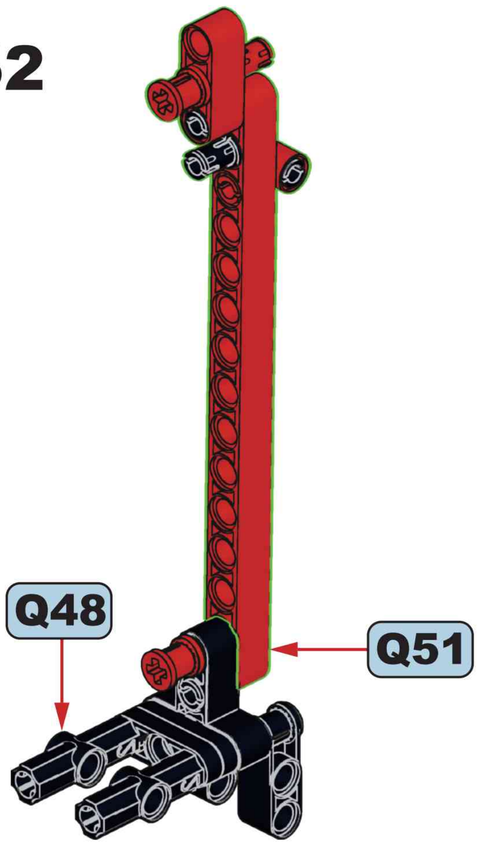

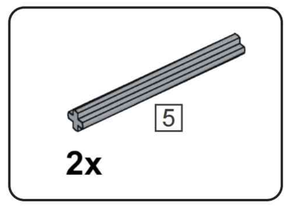

Q53

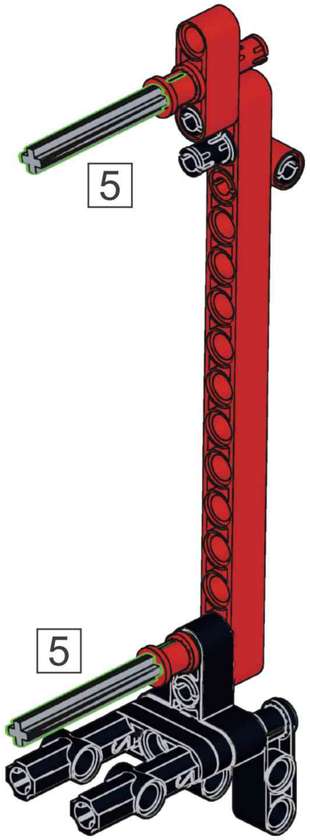

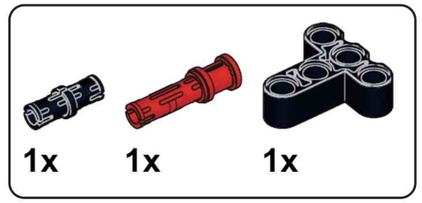

Q54

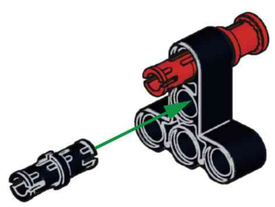

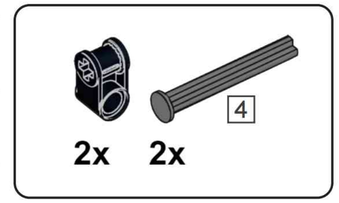

Q55

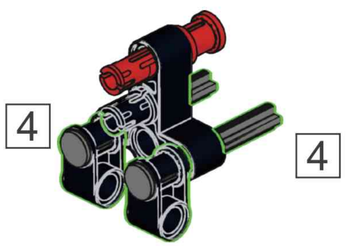

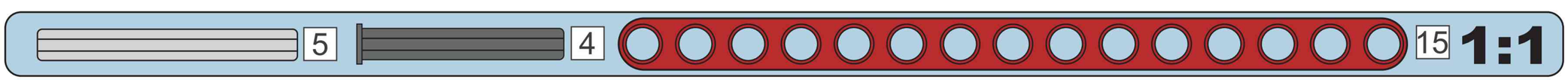

2x

Q56

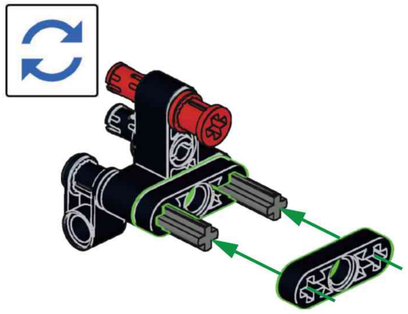

2x 1x

15

Q57

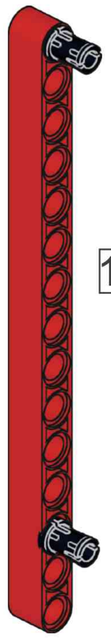

15

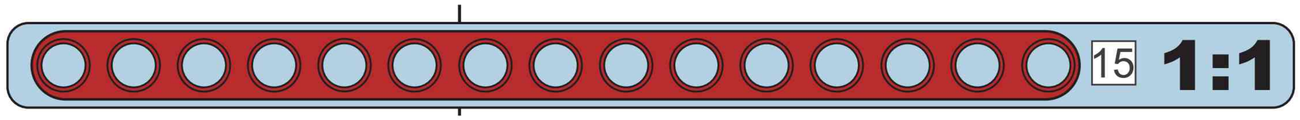

15 1:1

1x 1x 1x

Q58

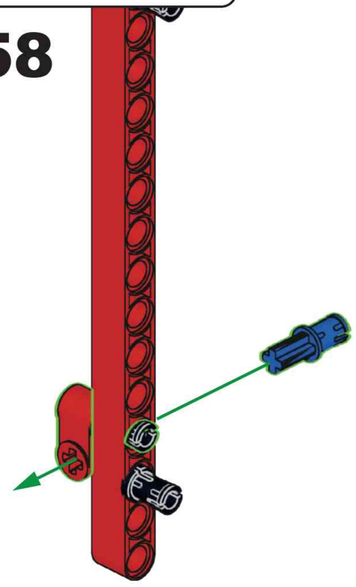

1x 1x

Q59

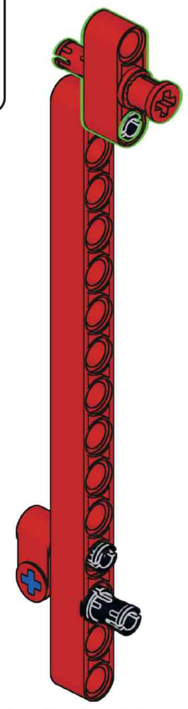

Q60

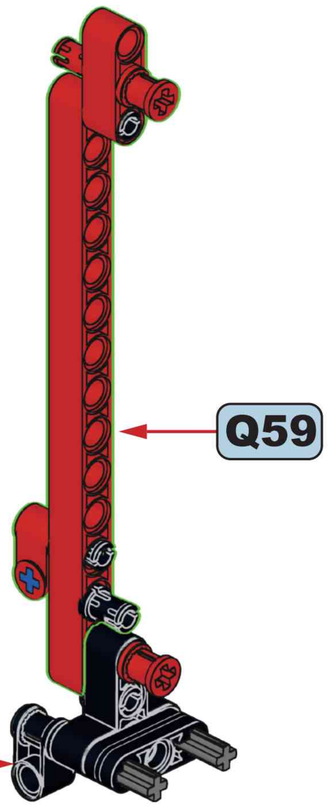

Q61

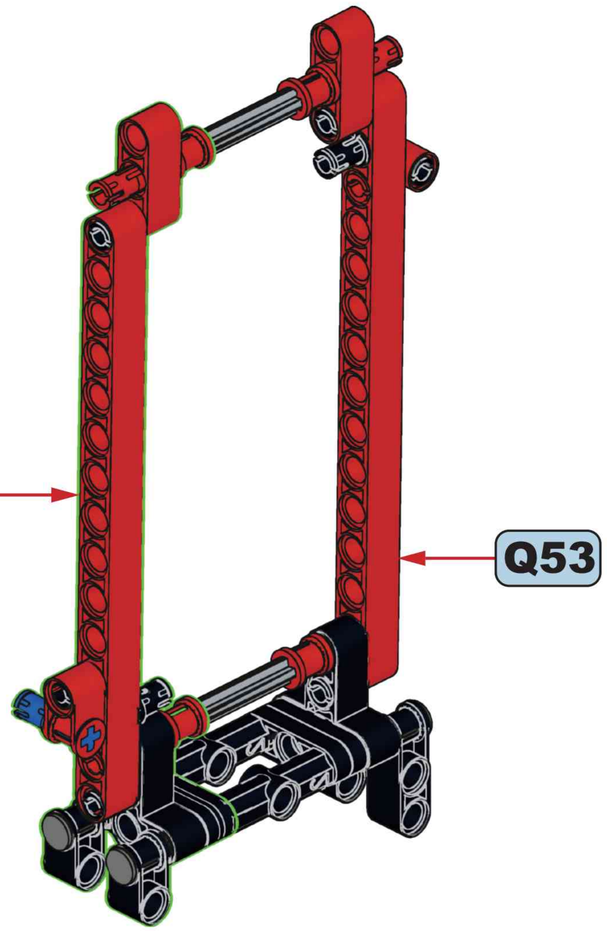

15

1x

Q62

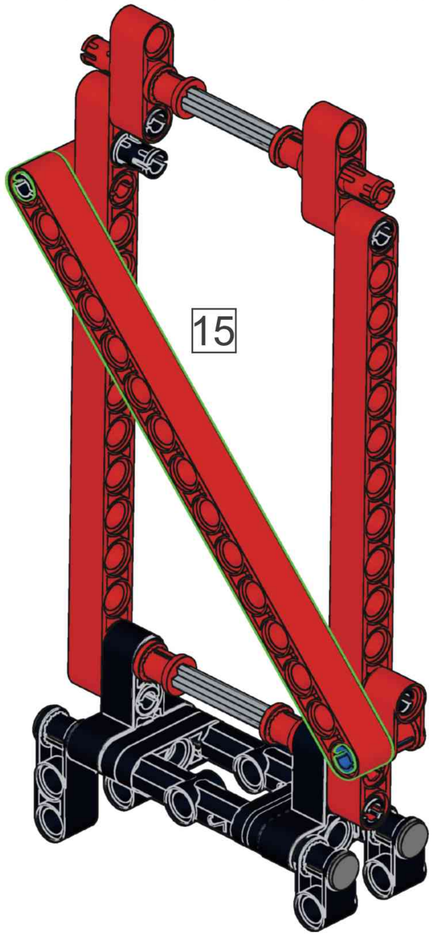

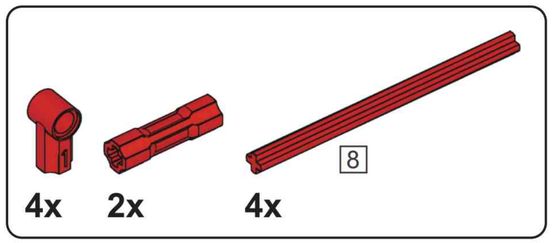

Q63

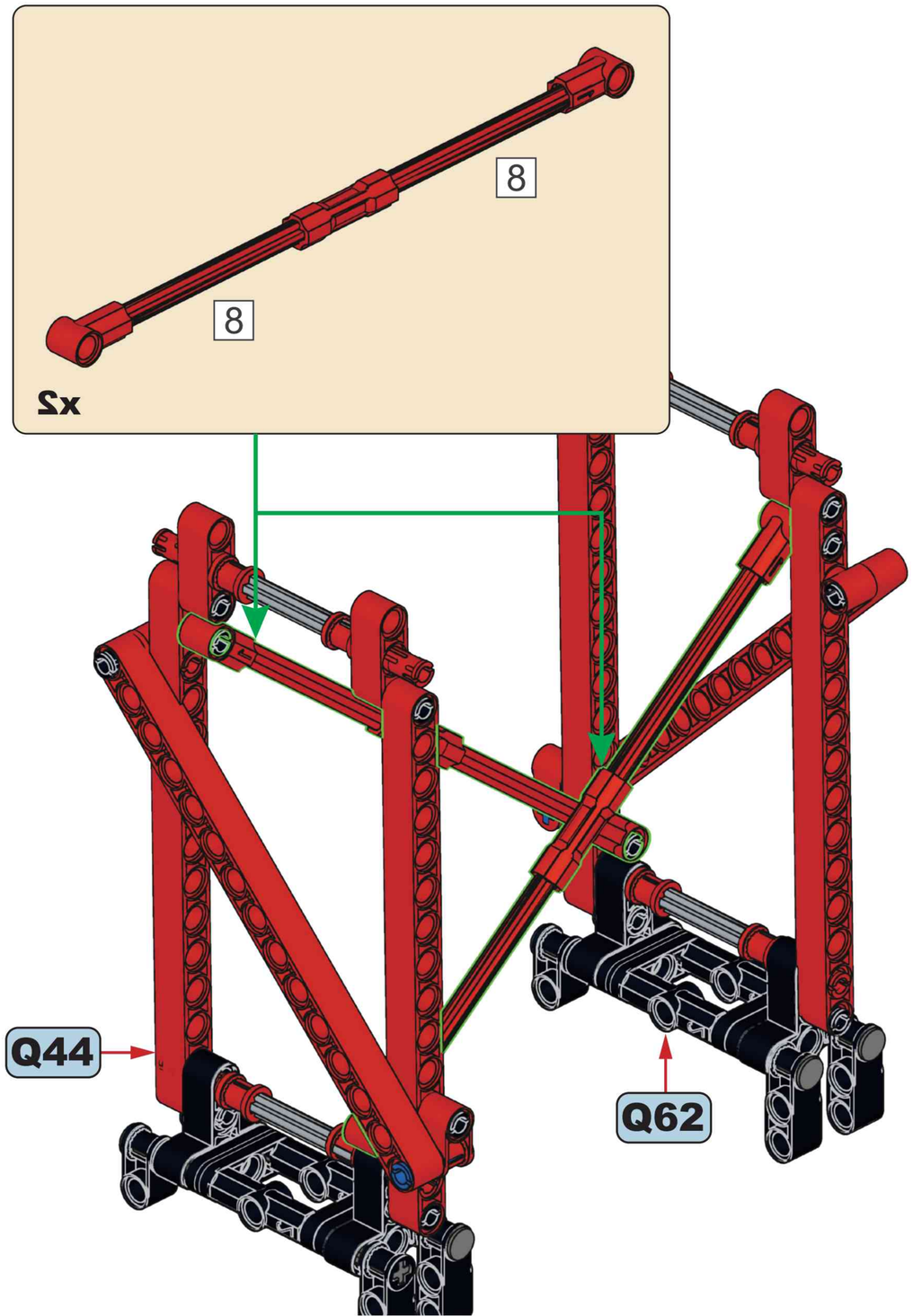

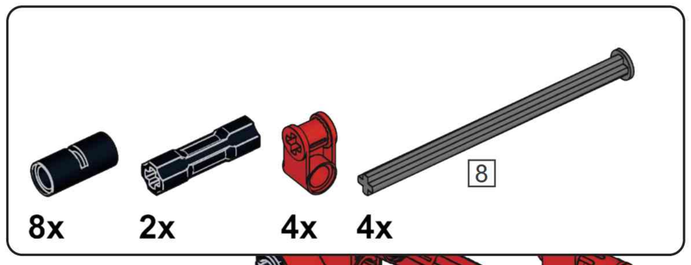

Q64

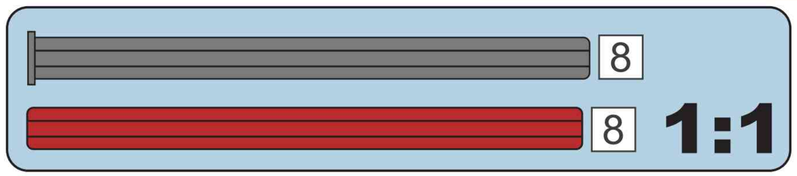

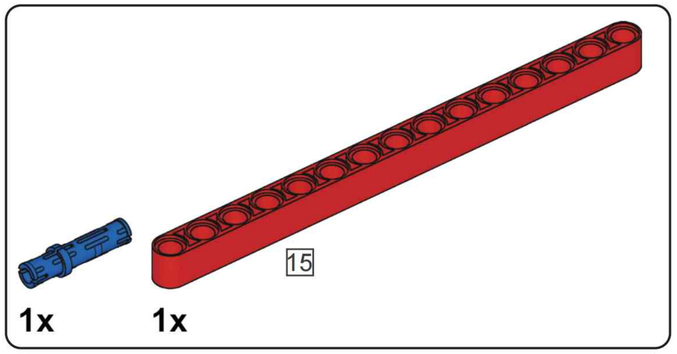

Q65

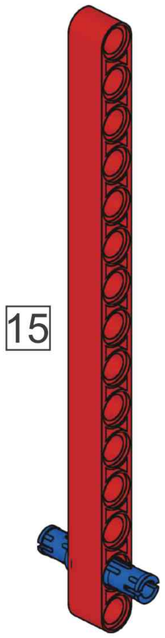

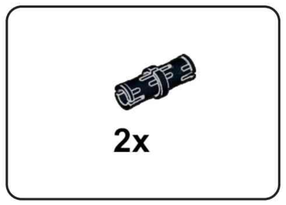

Q66

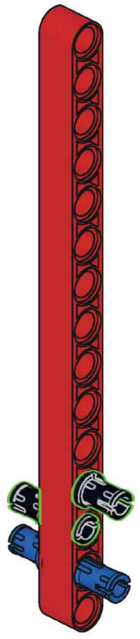

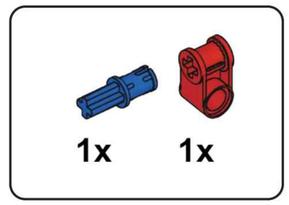

Q67

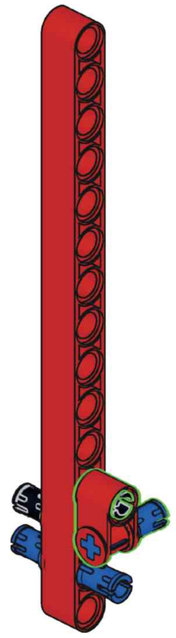

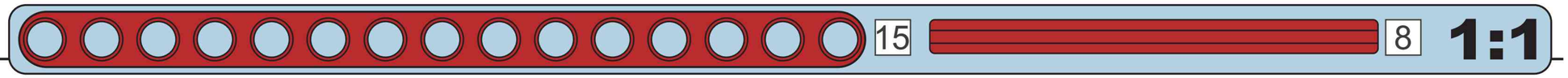

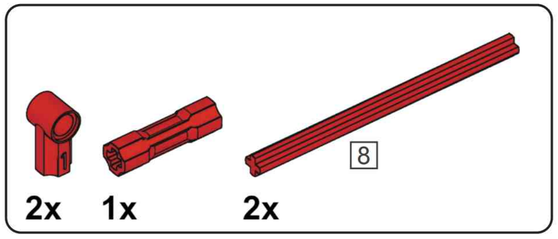

Q68

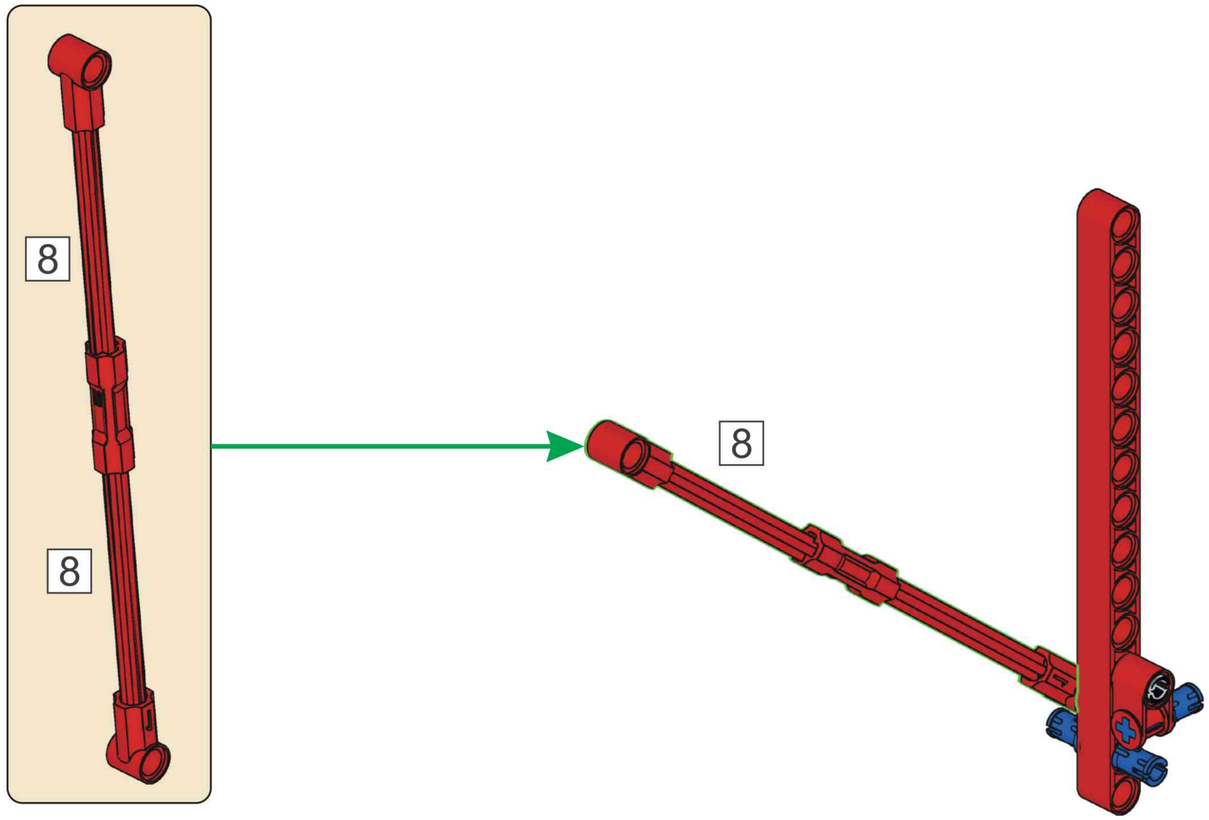

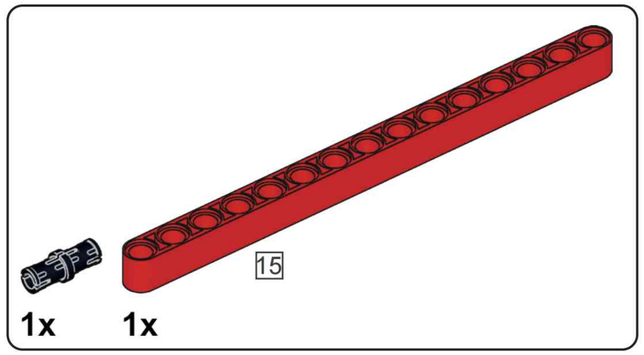

Q69

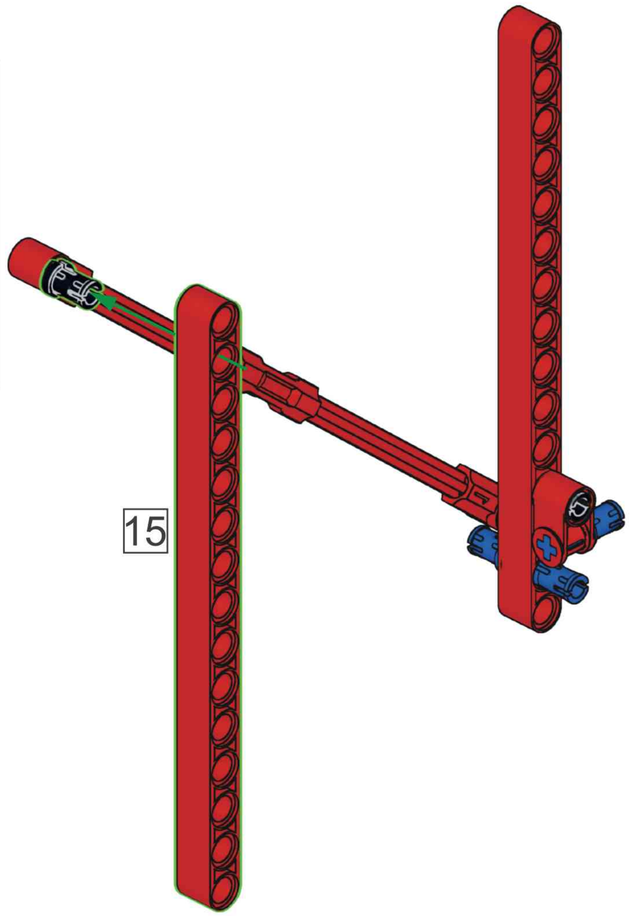

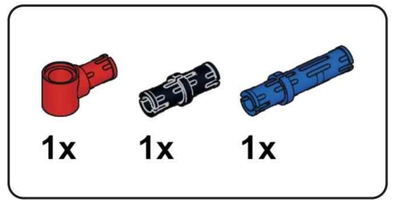

Q70

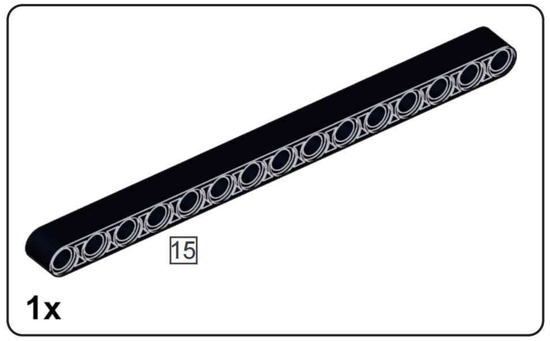

Q71

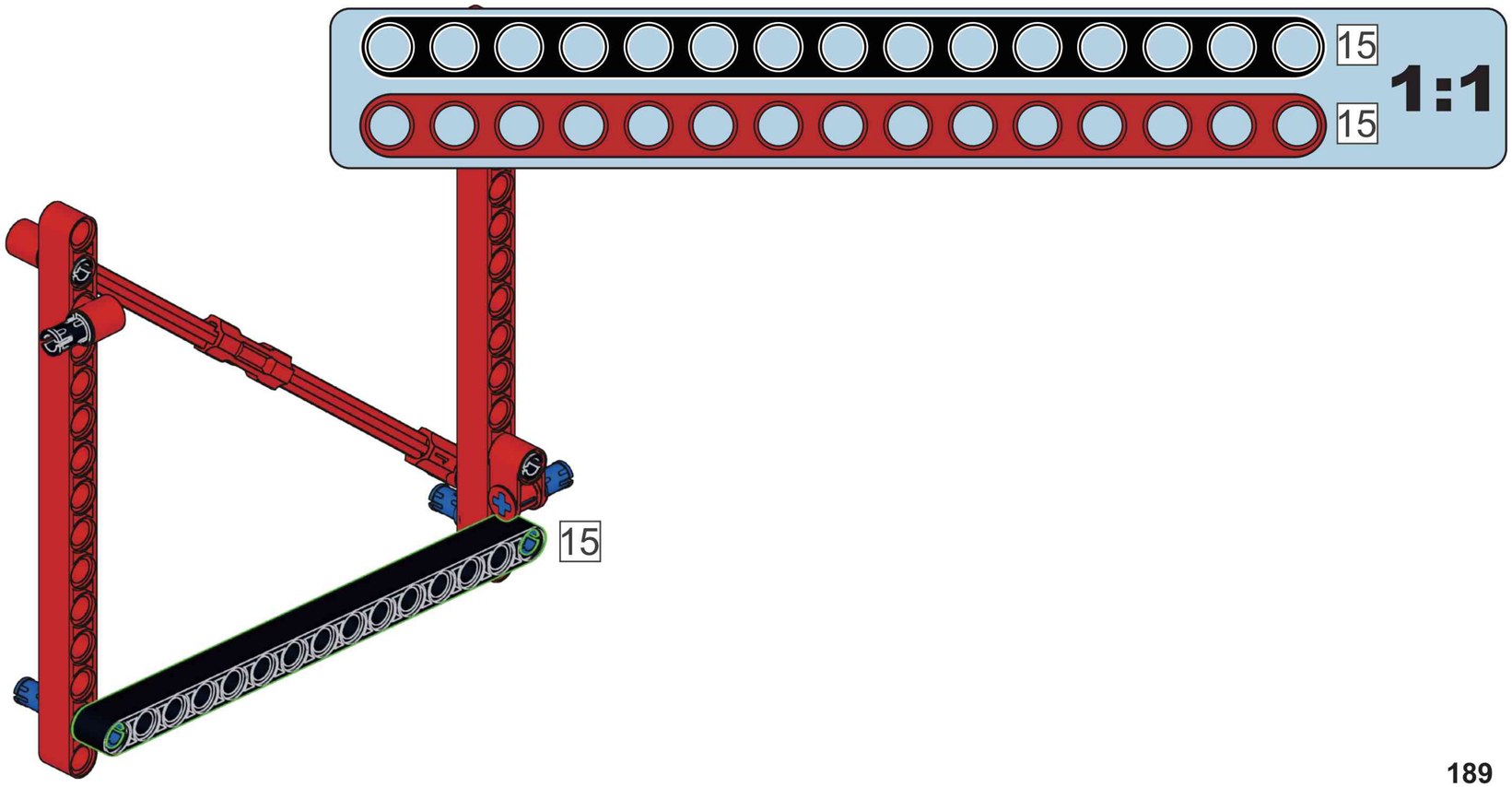

Q72

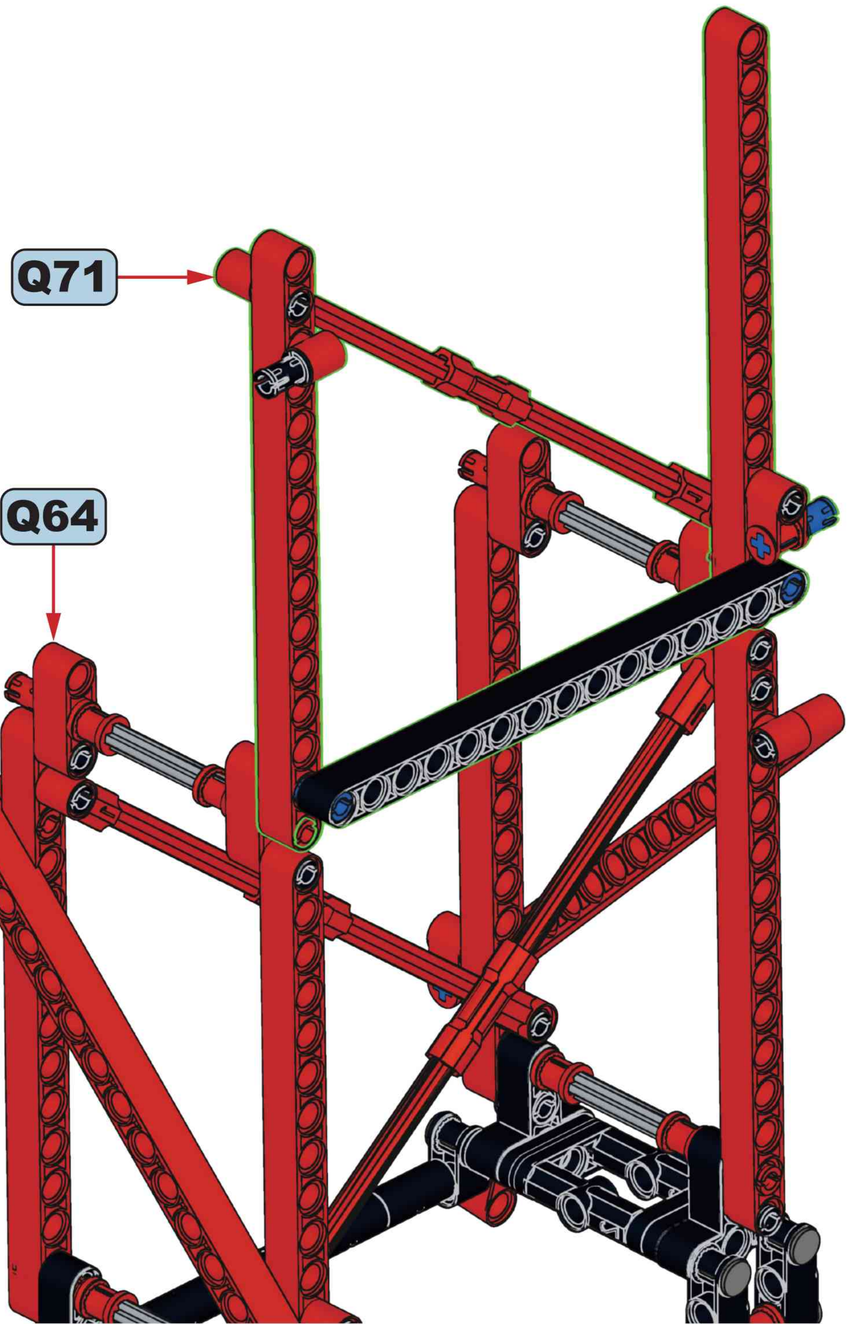

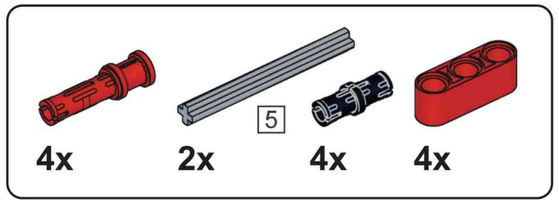

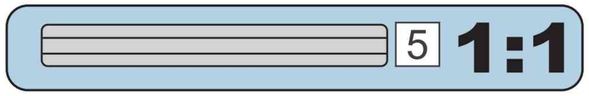

Q73

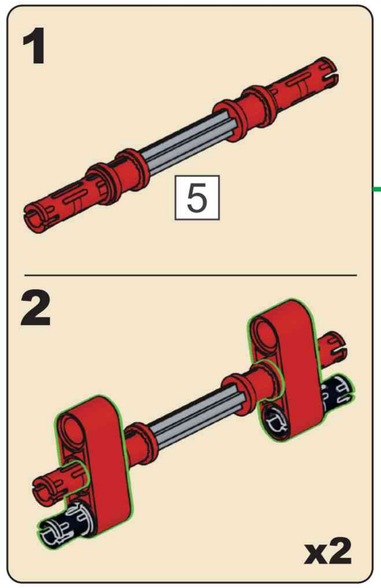

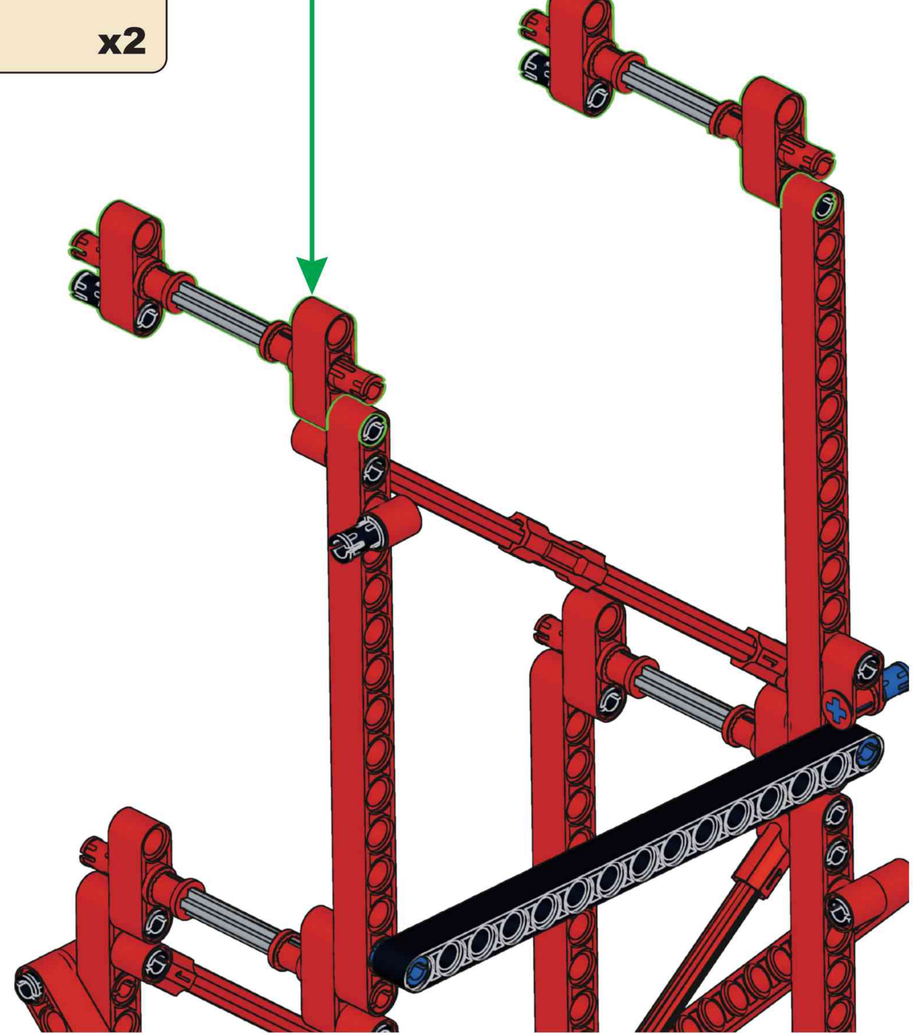

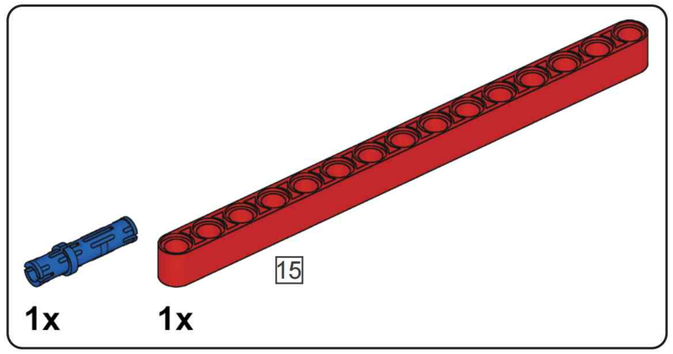

Q74

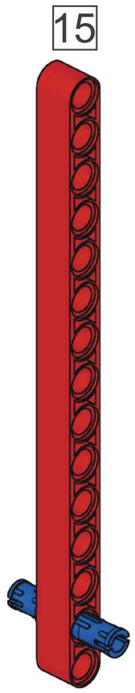

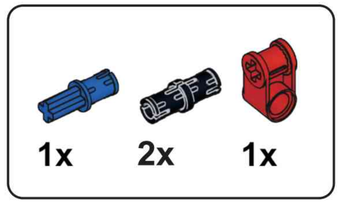

Q75

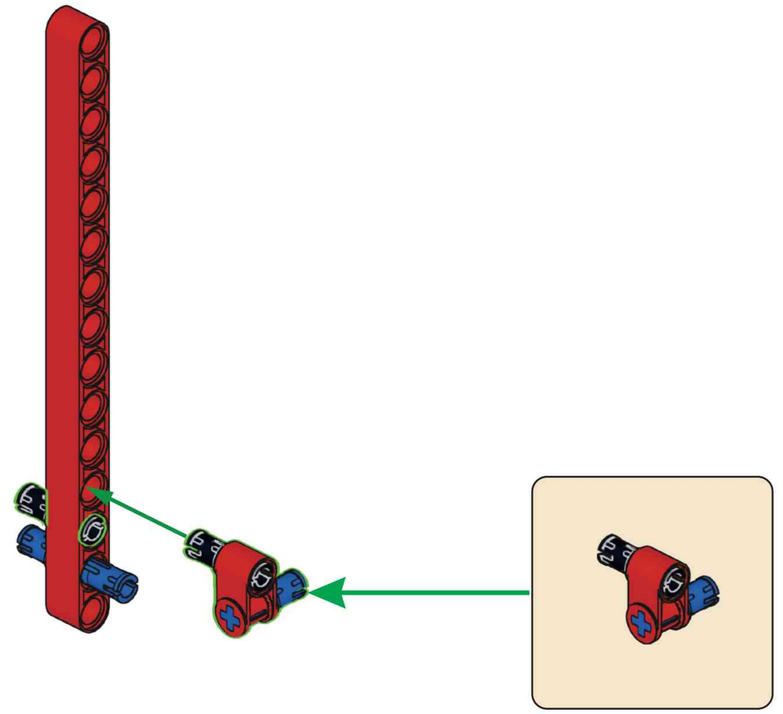

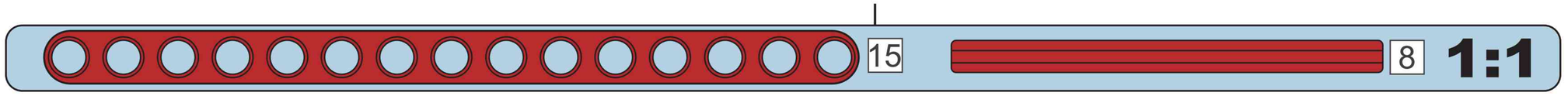

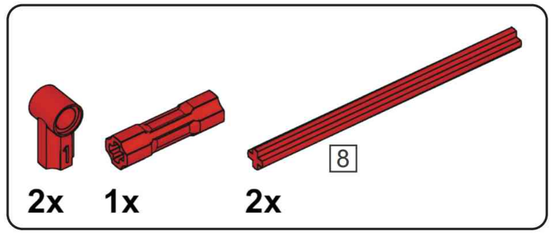

Q76

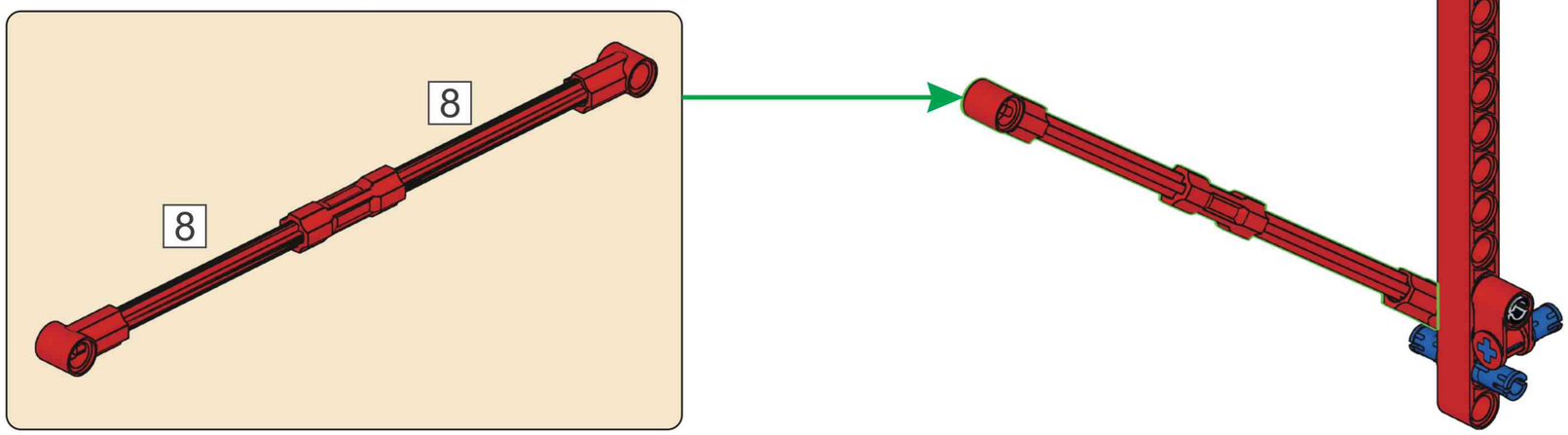

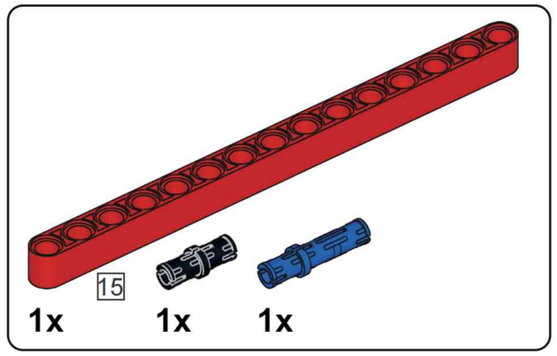

Q77

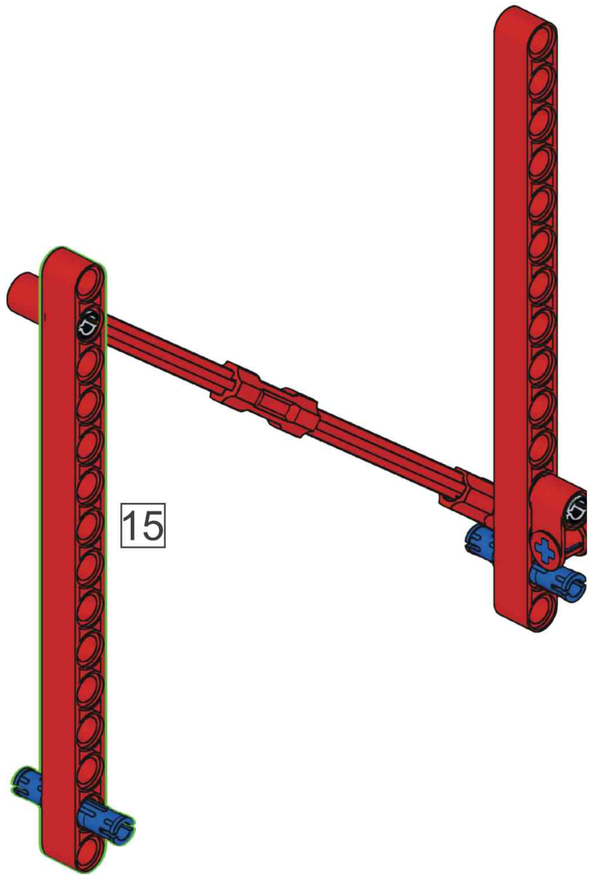

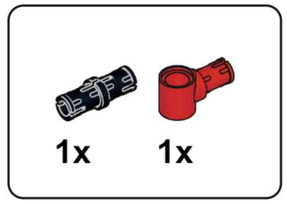

Q78

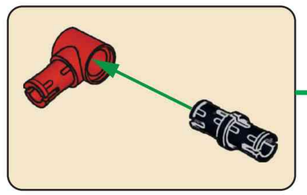

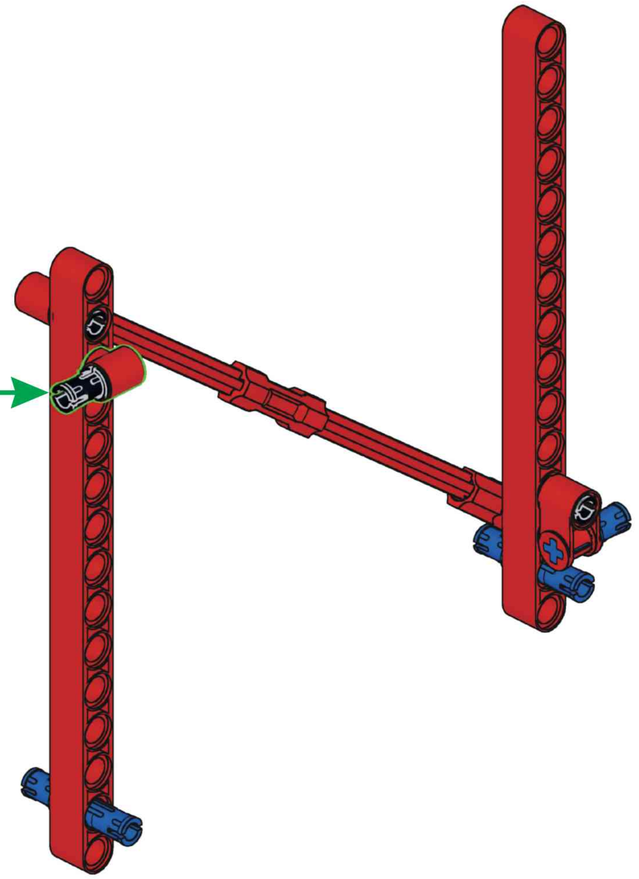

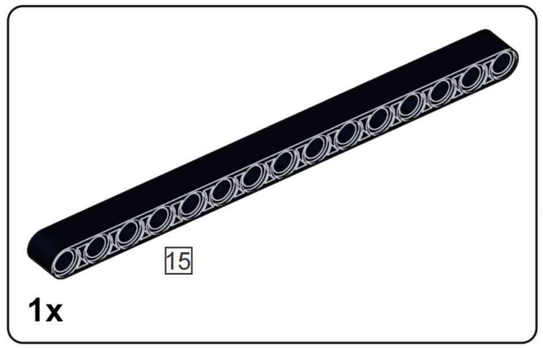

Q79

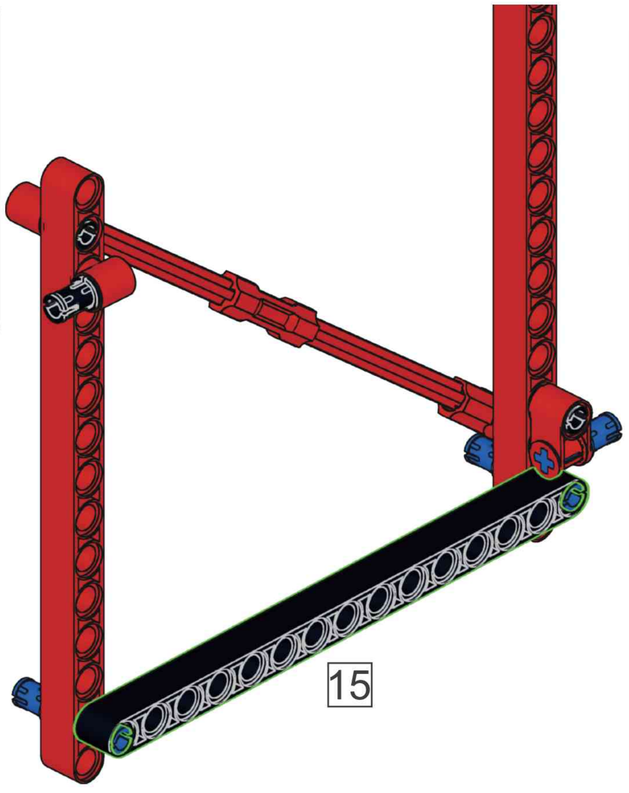

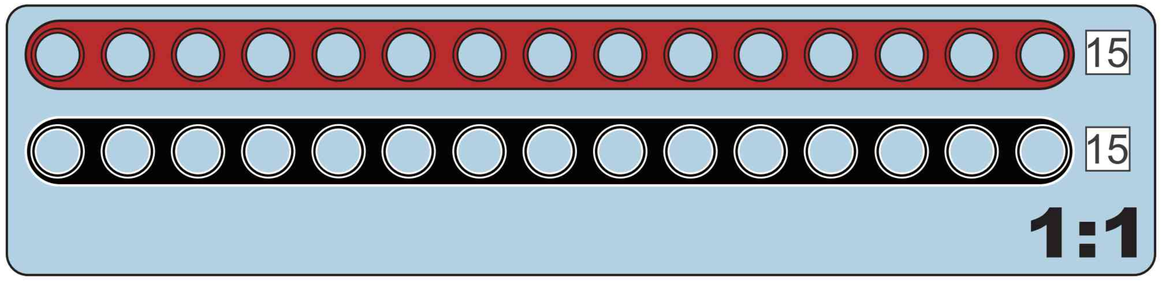

Q80



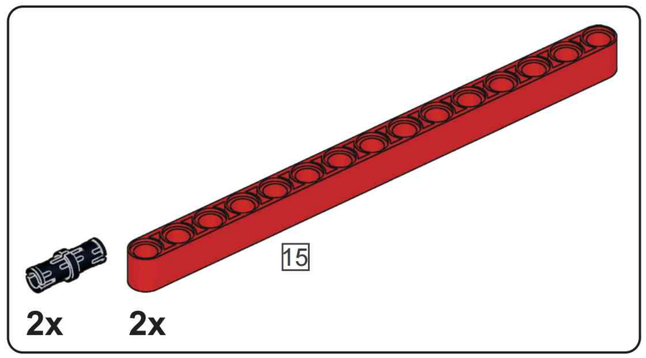

Q81

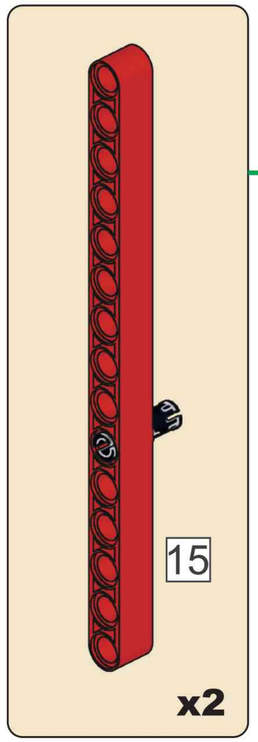

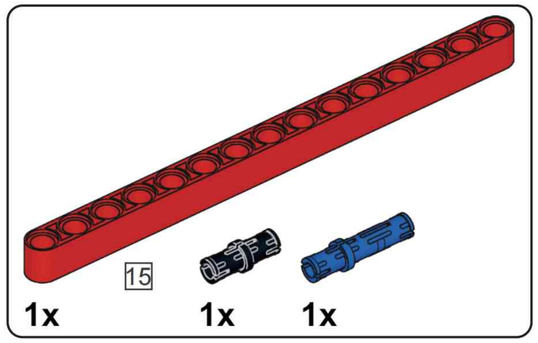

Q82

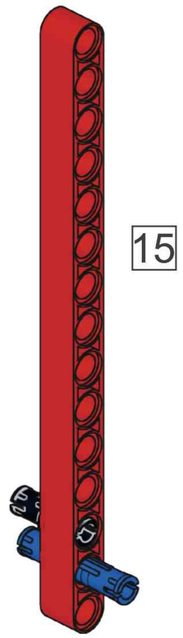

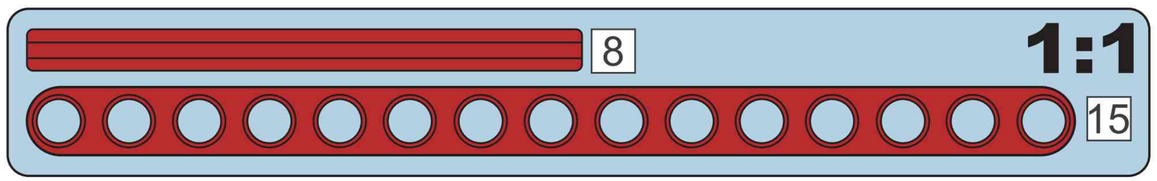

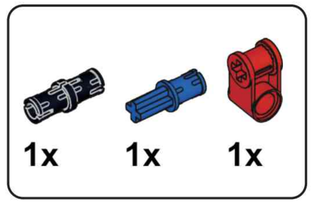

Q83

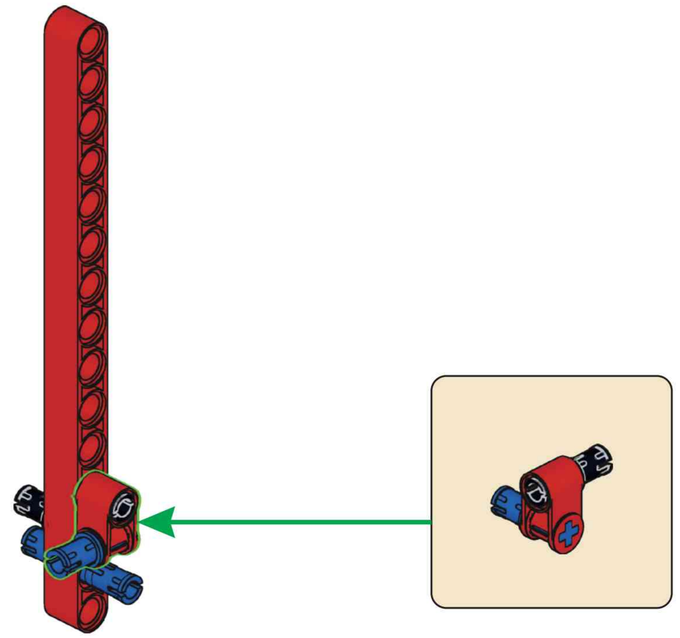

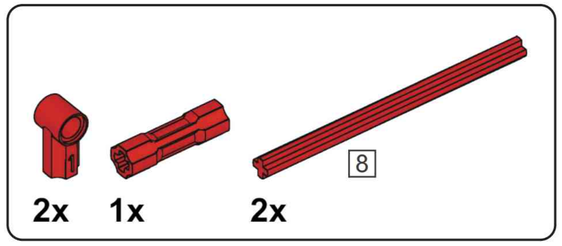

Q84

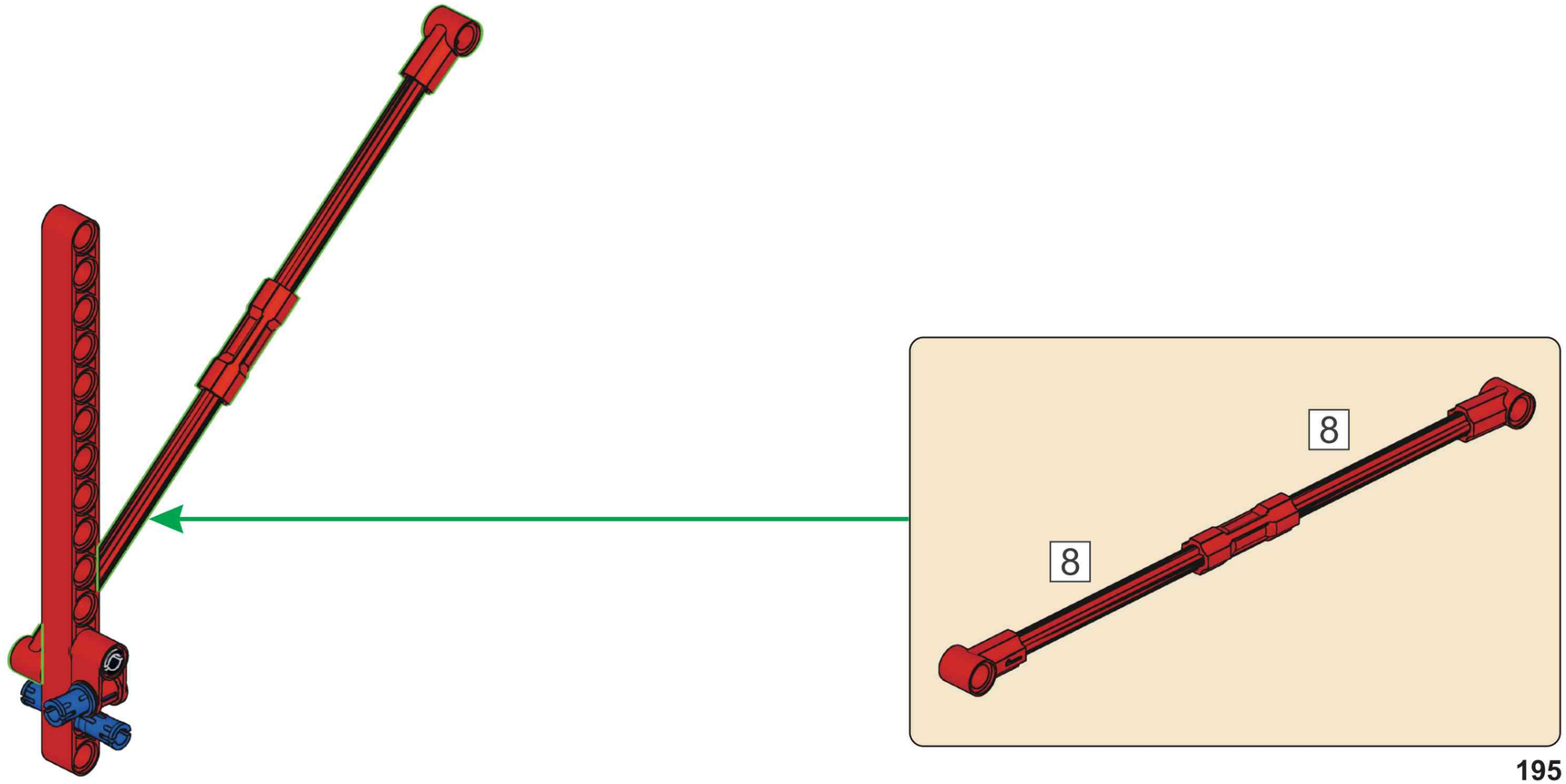

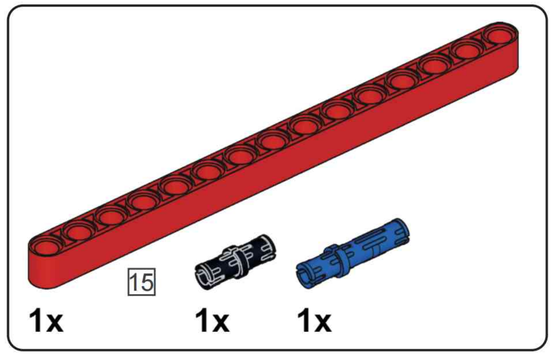

Q85

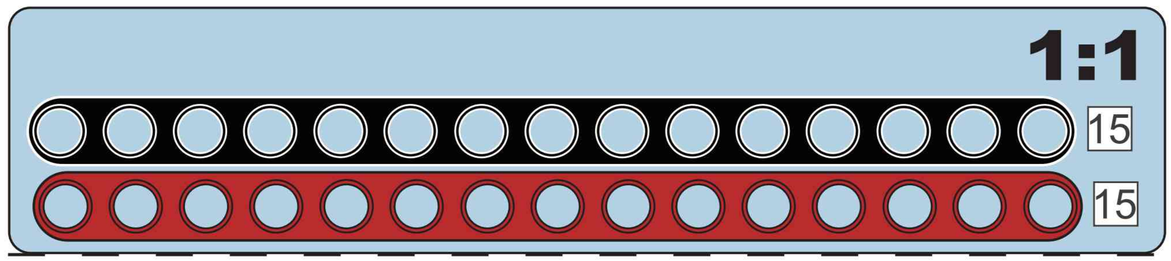

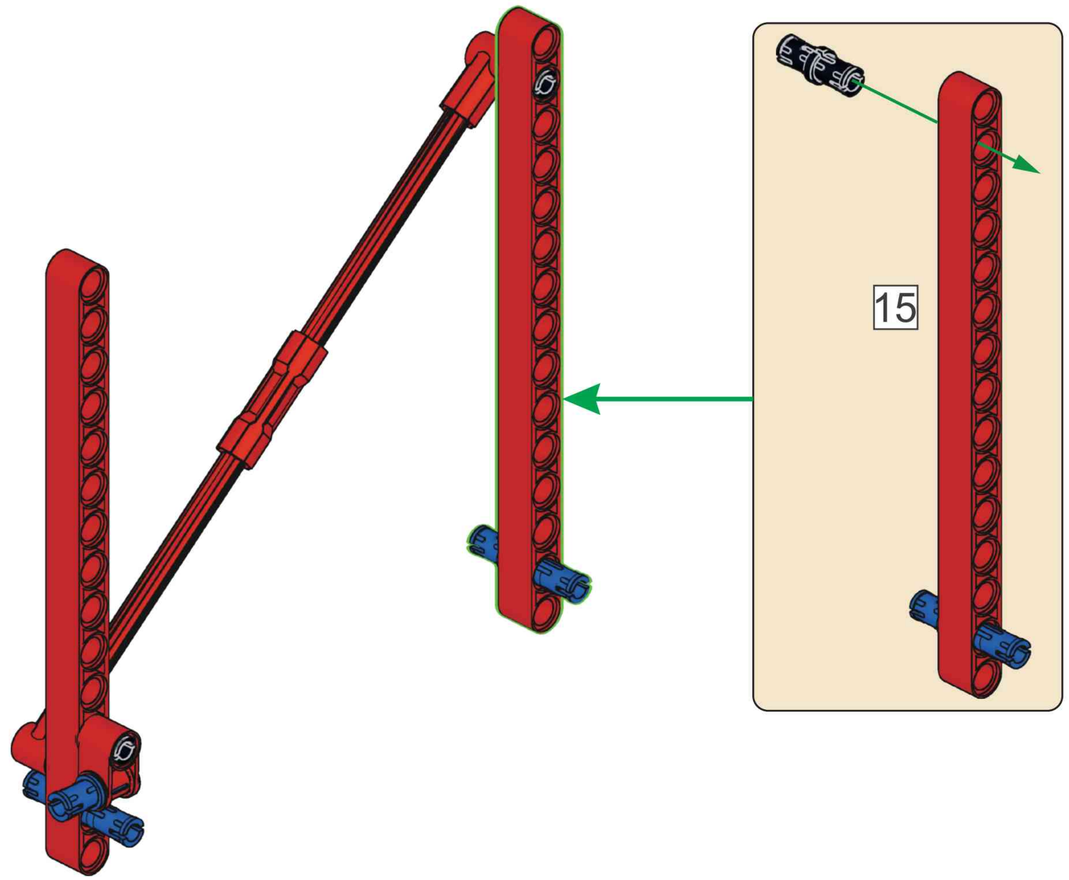

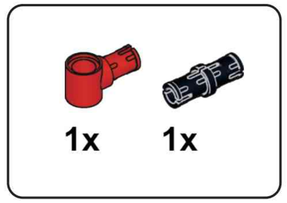

Q86

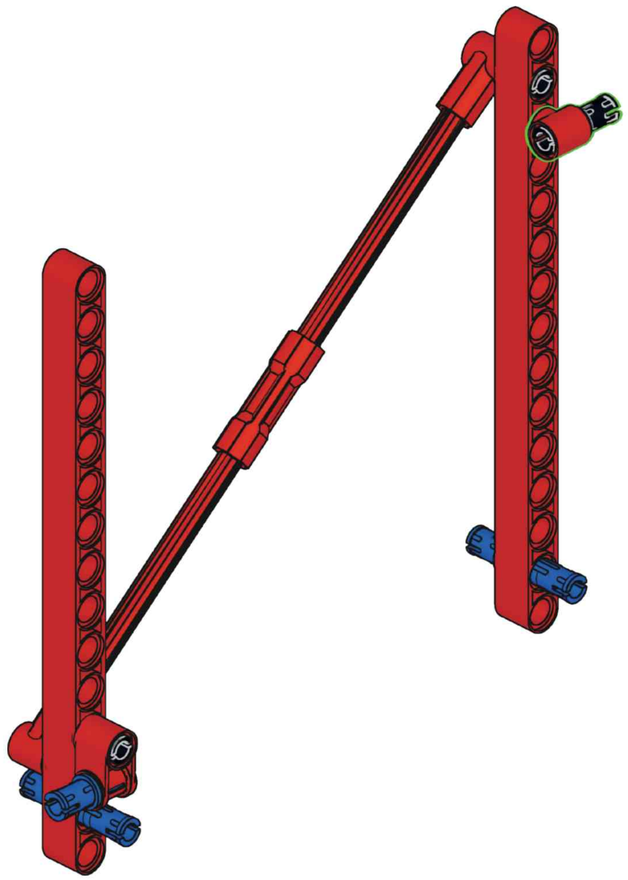

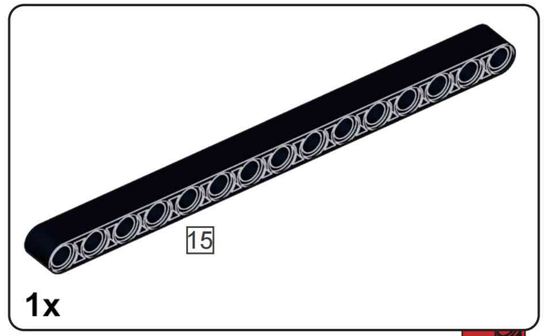

Q87

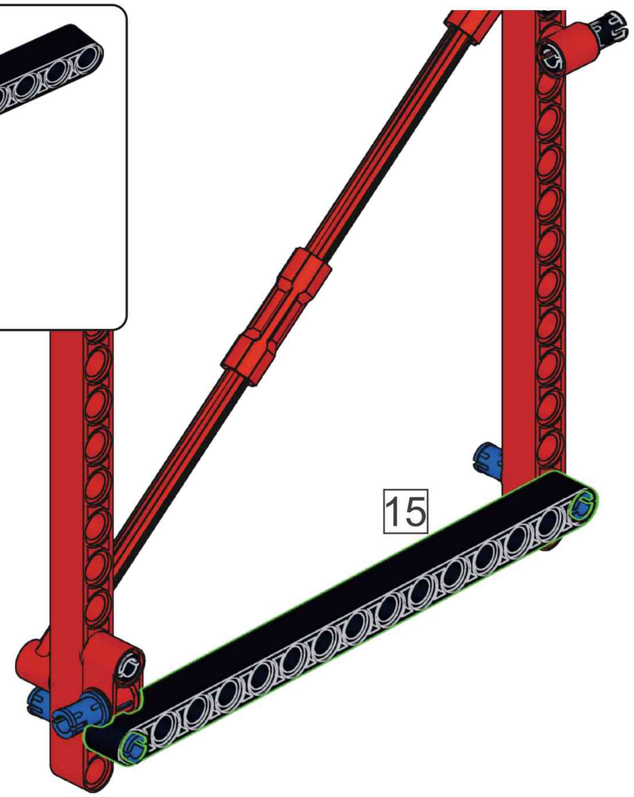

Q88

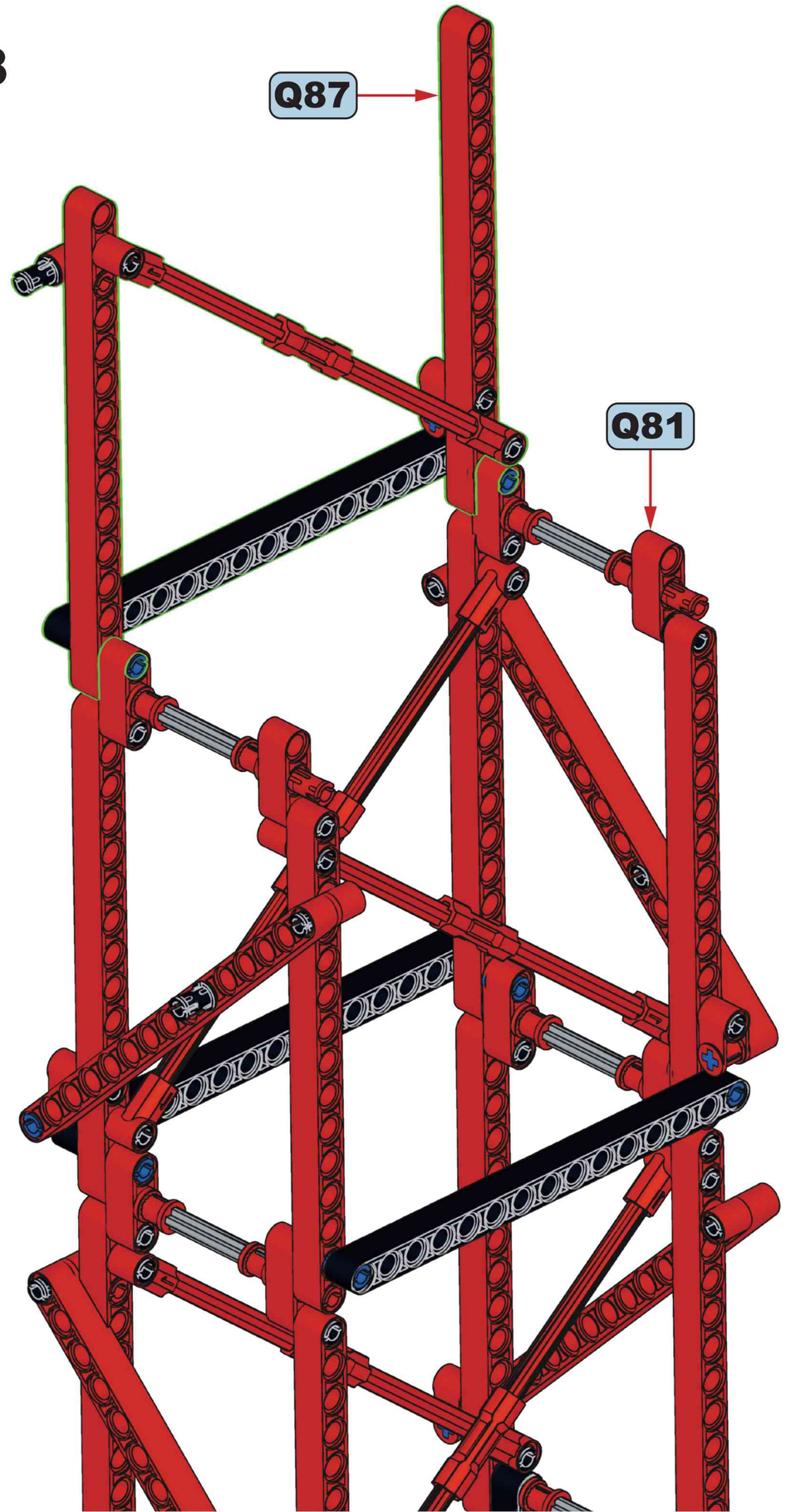

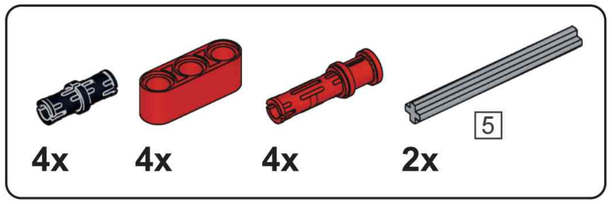

Q89

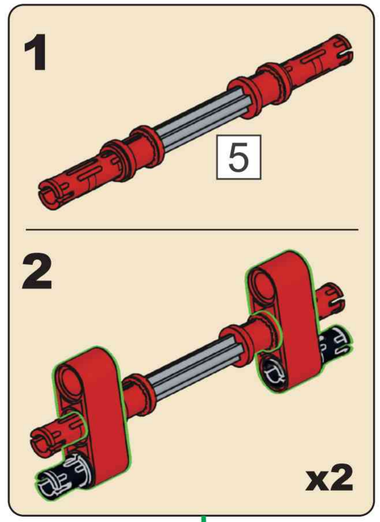

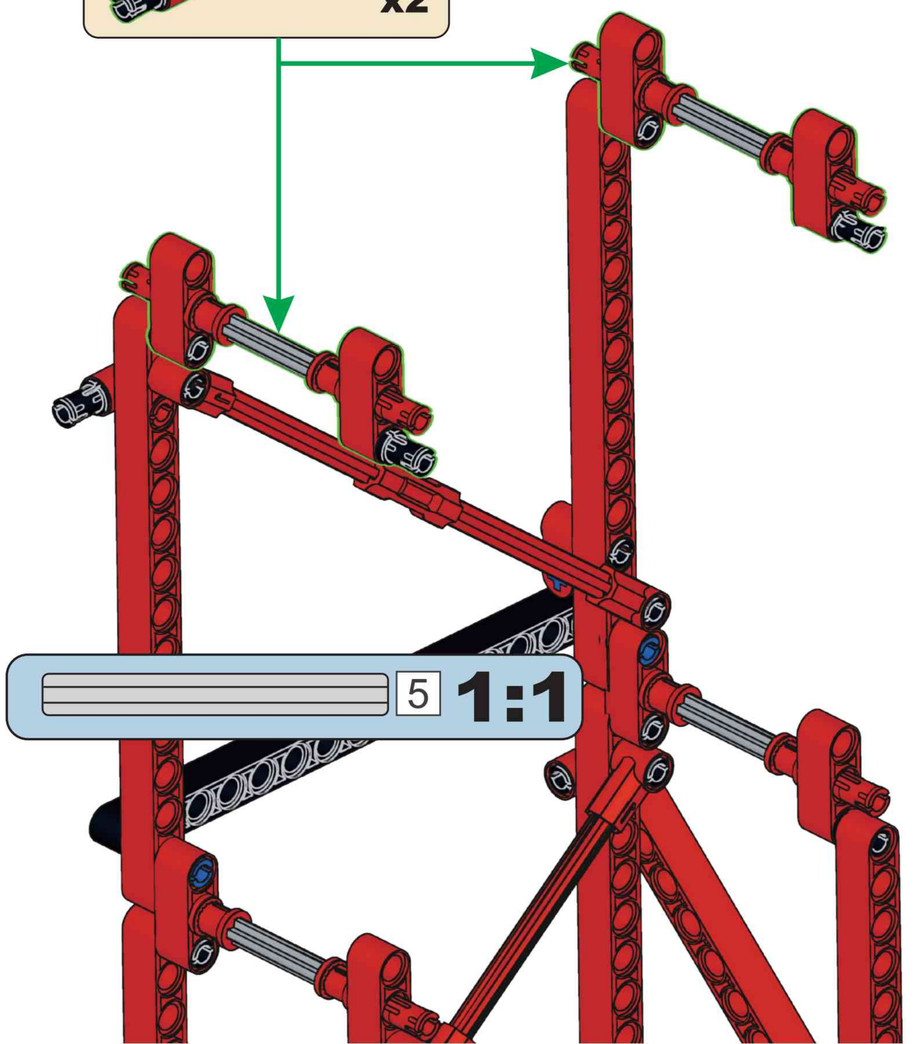

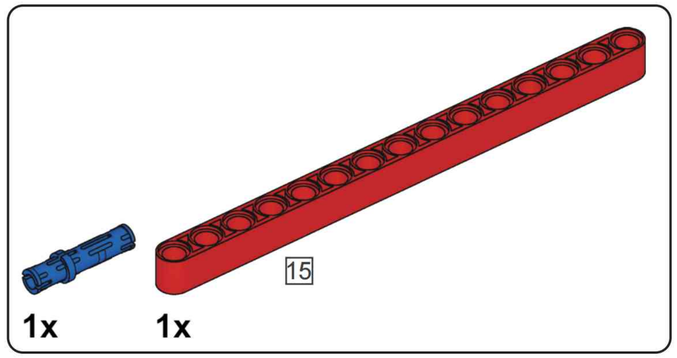

Q90

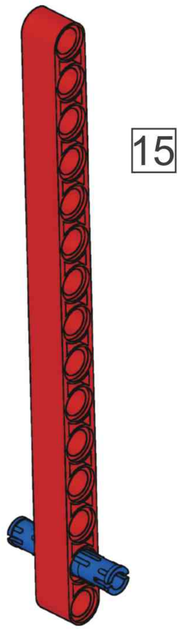

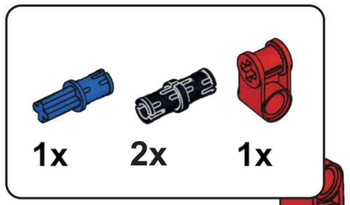

Q91

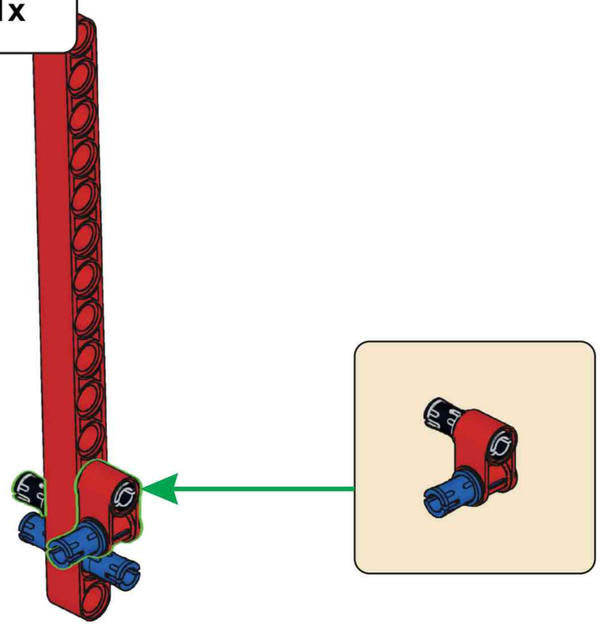

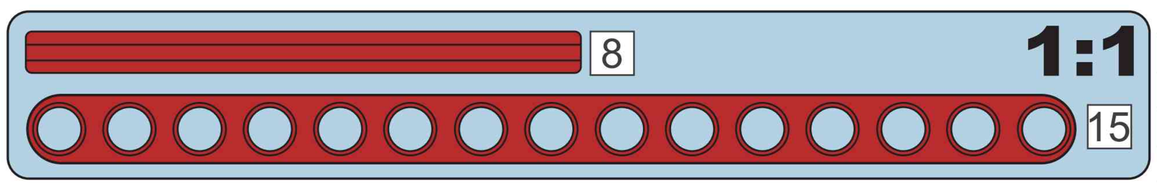

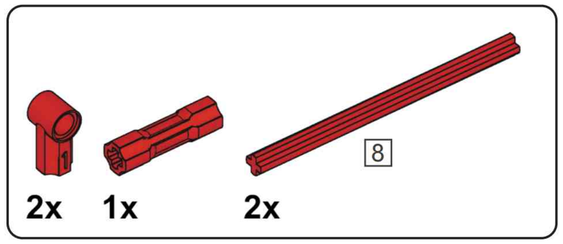

Q92

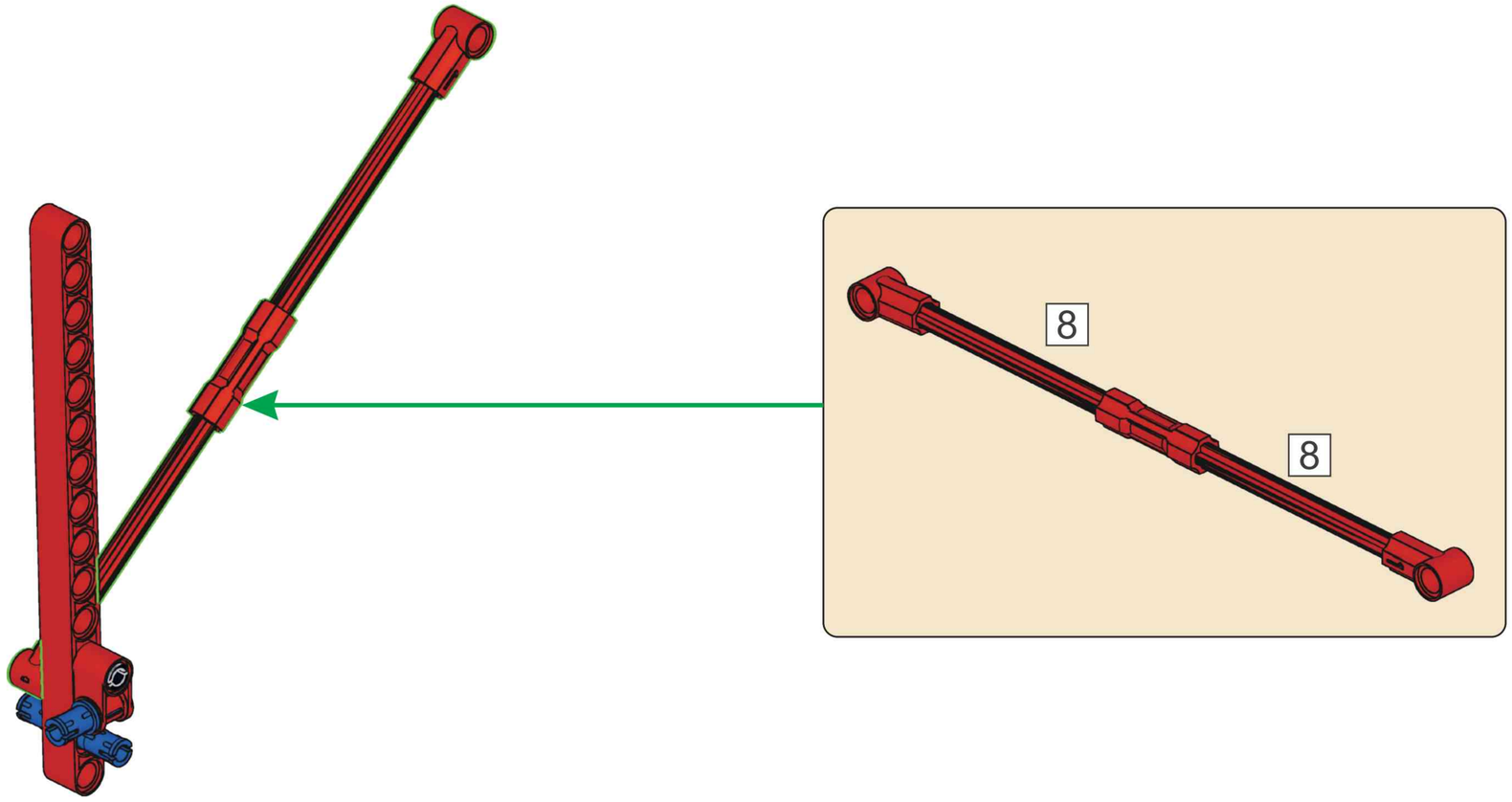

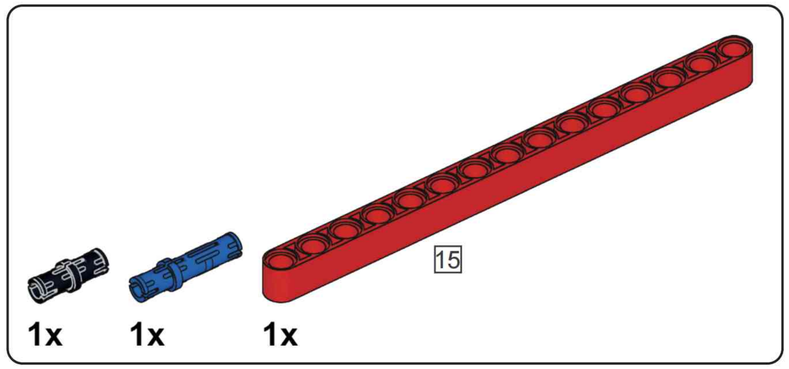

Q93

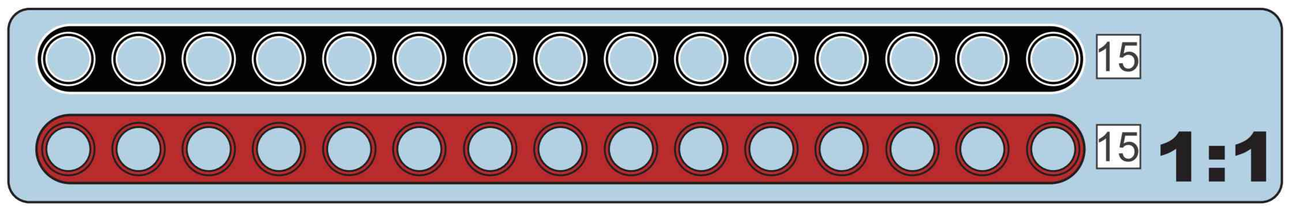

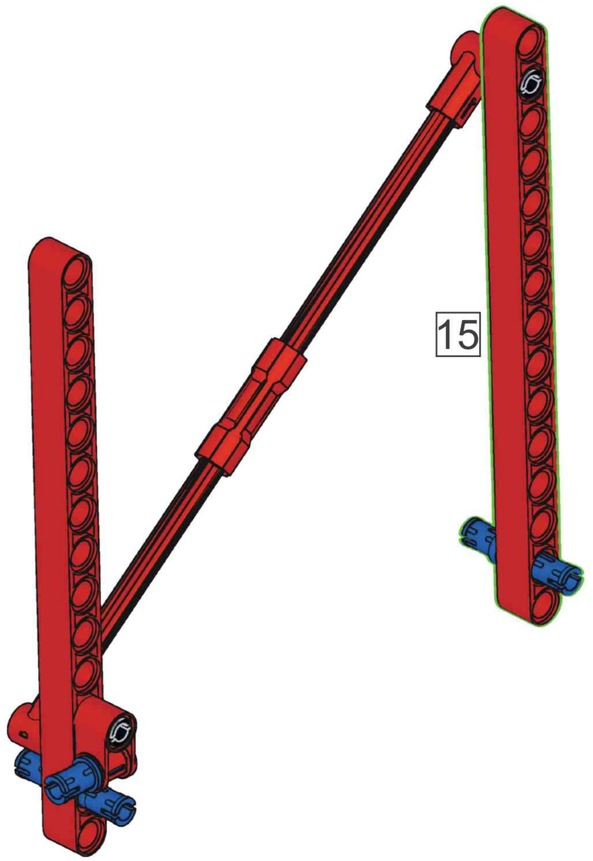

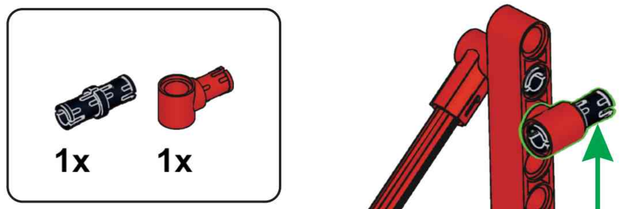

Q94

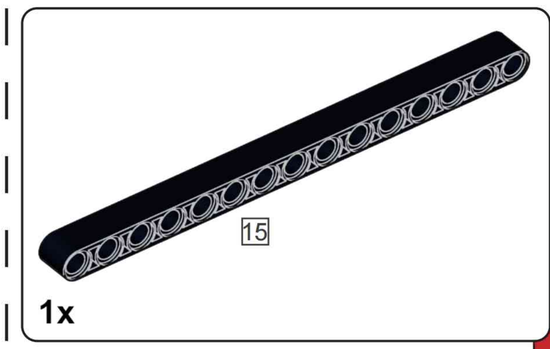

Q95

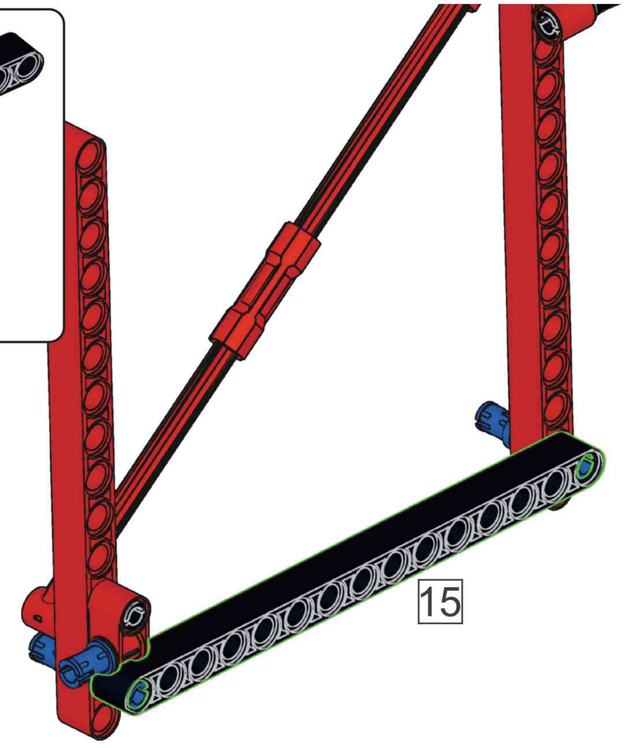

Q96



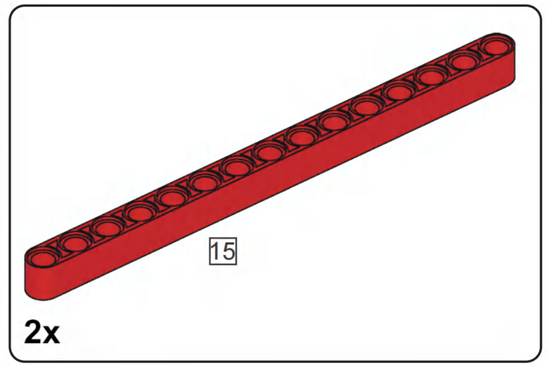

Q97

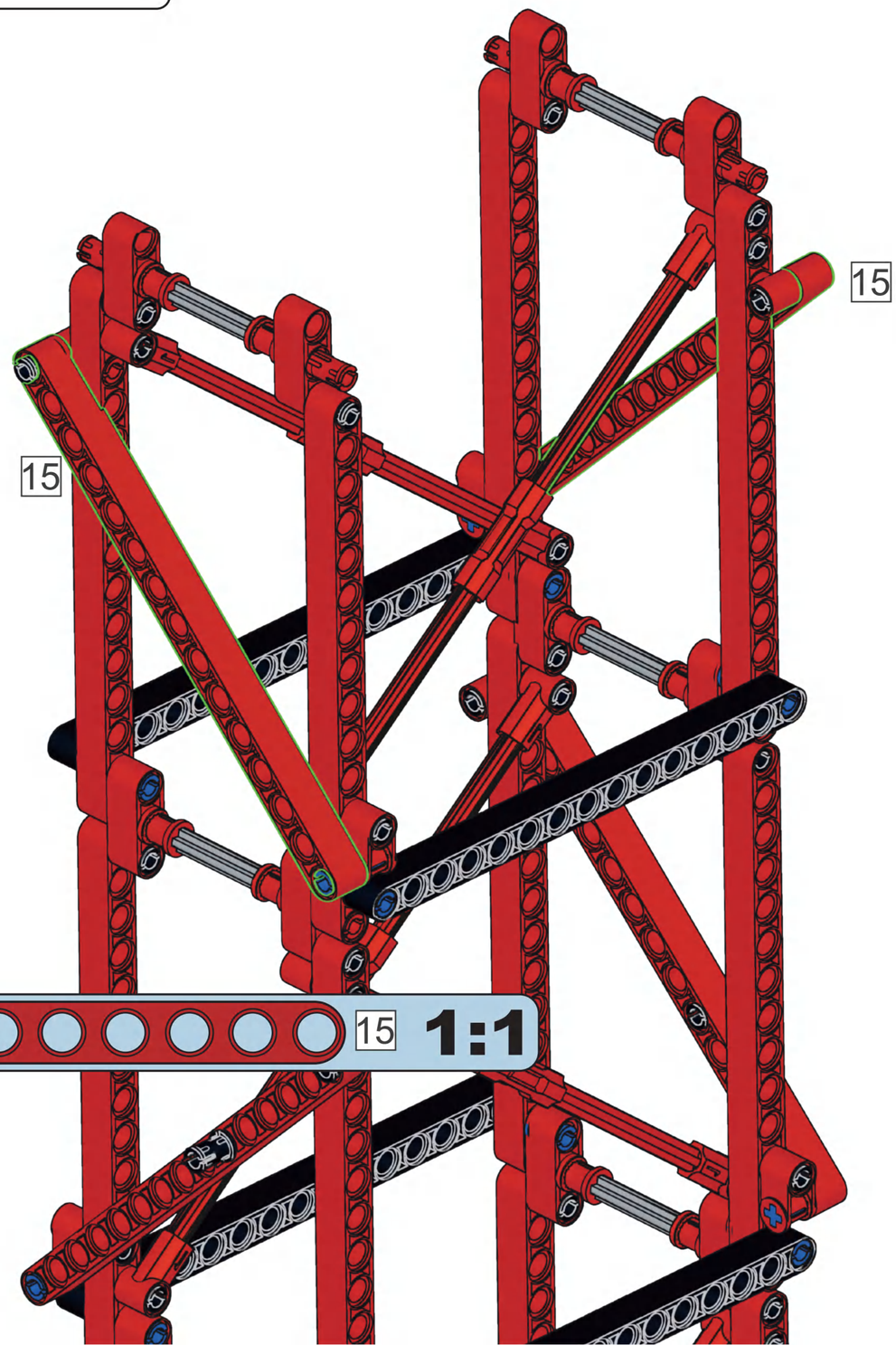

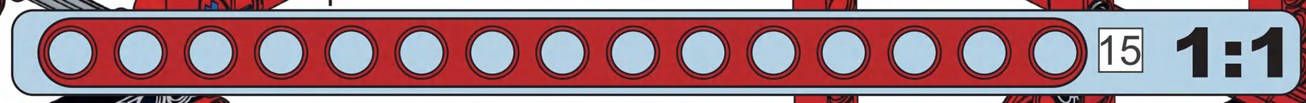

18

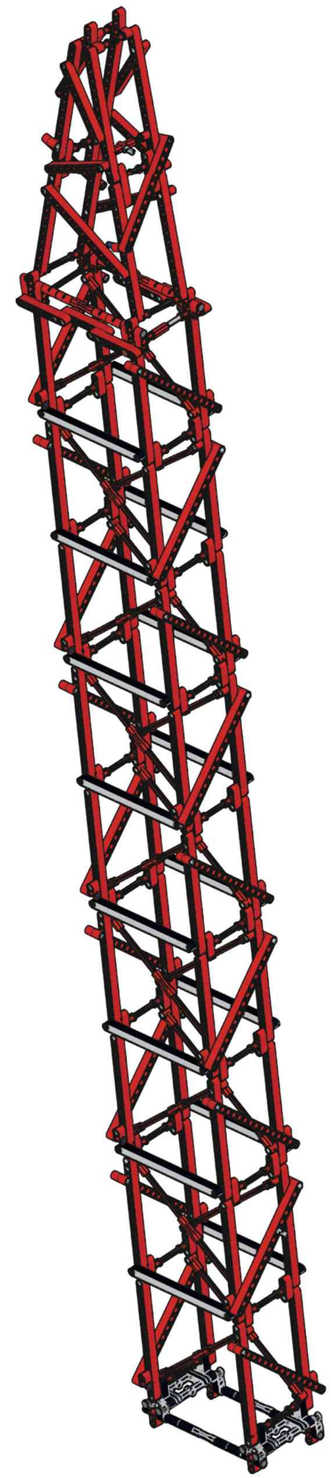

R

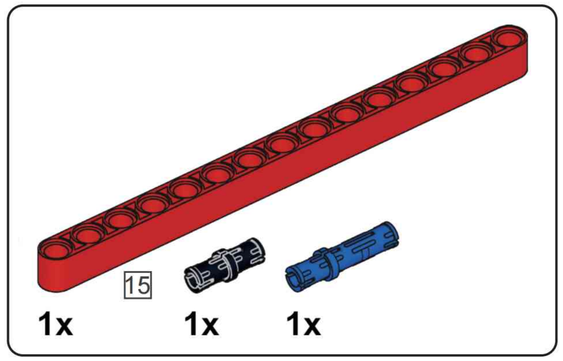

R1

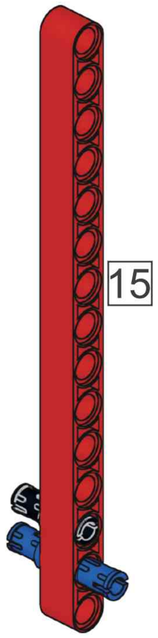

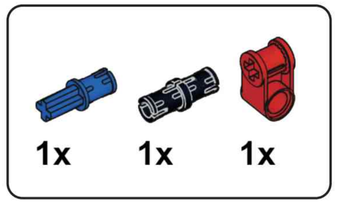

R2

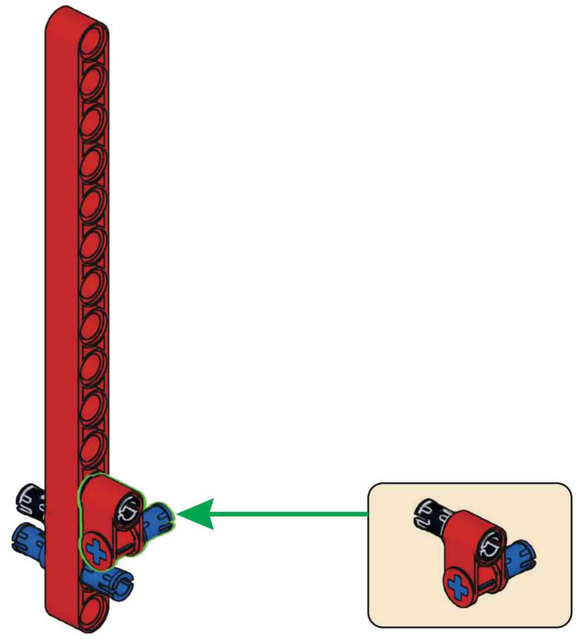

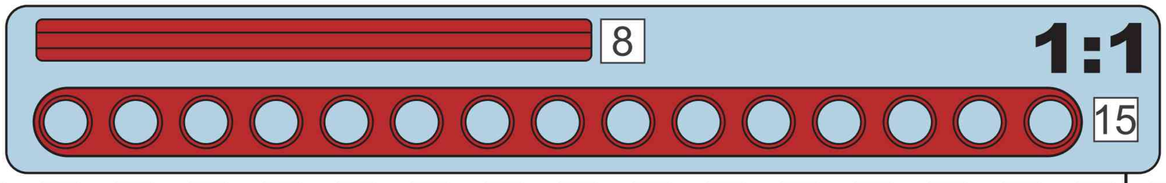

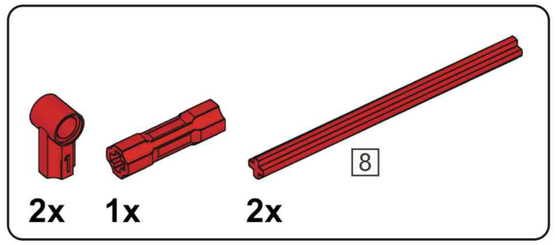

R3

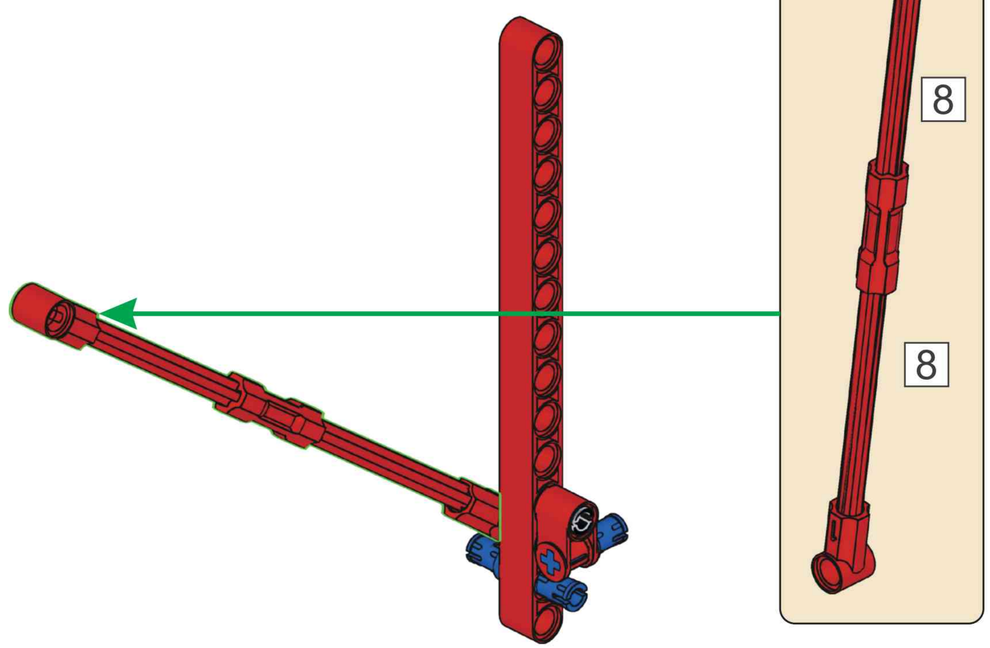

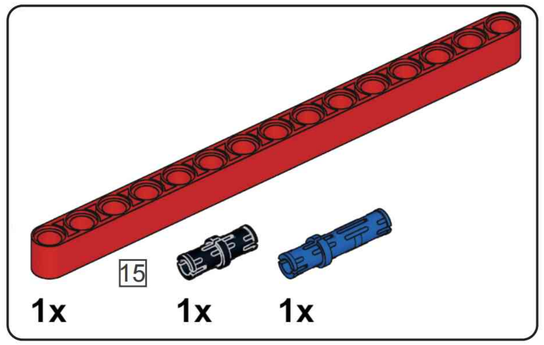

R4

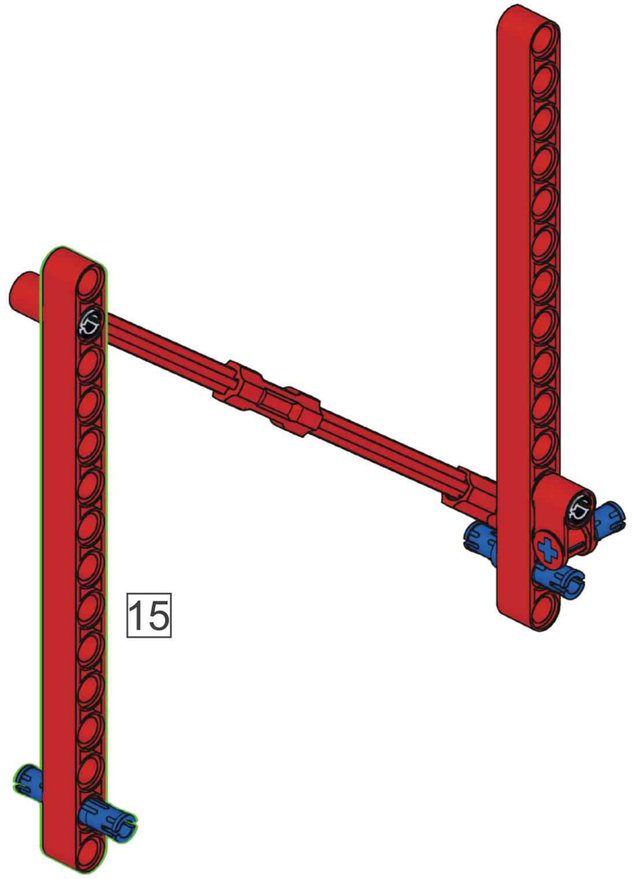

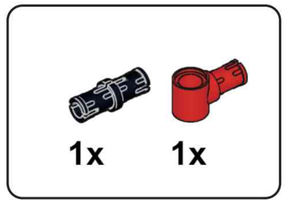

R5

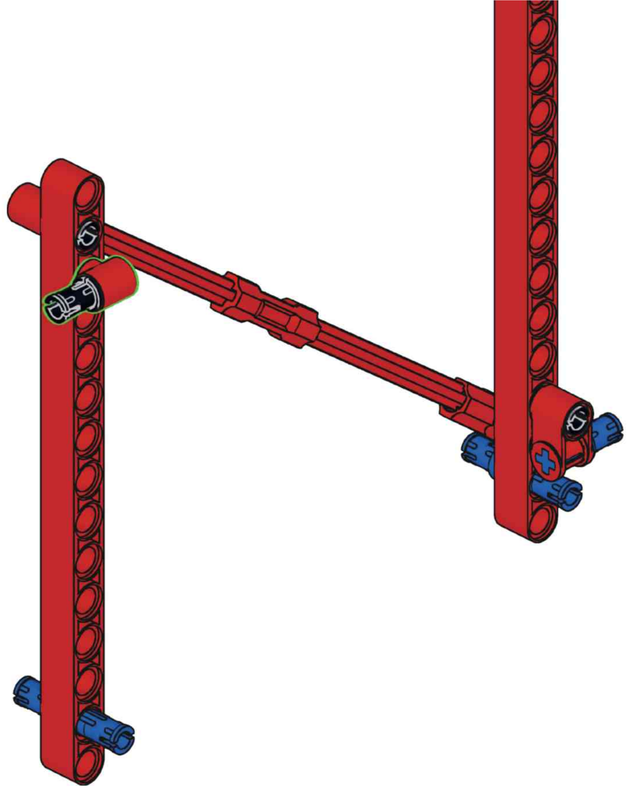

R7

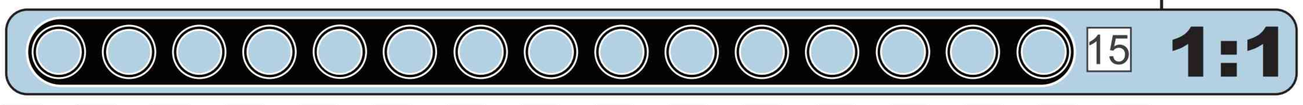

1:1

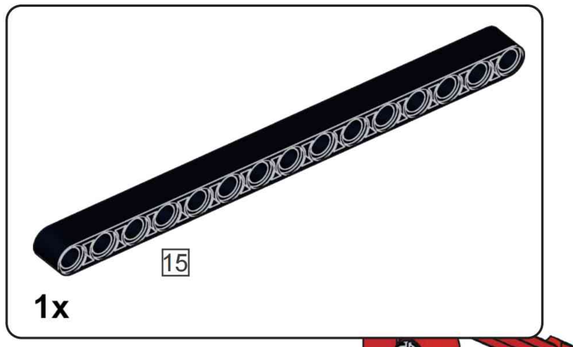

R6

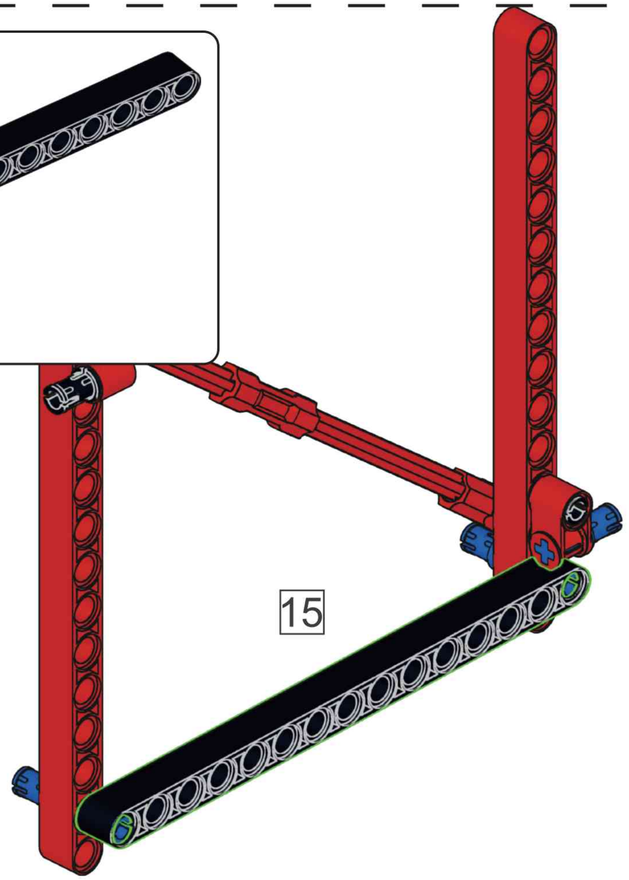

R6

R79

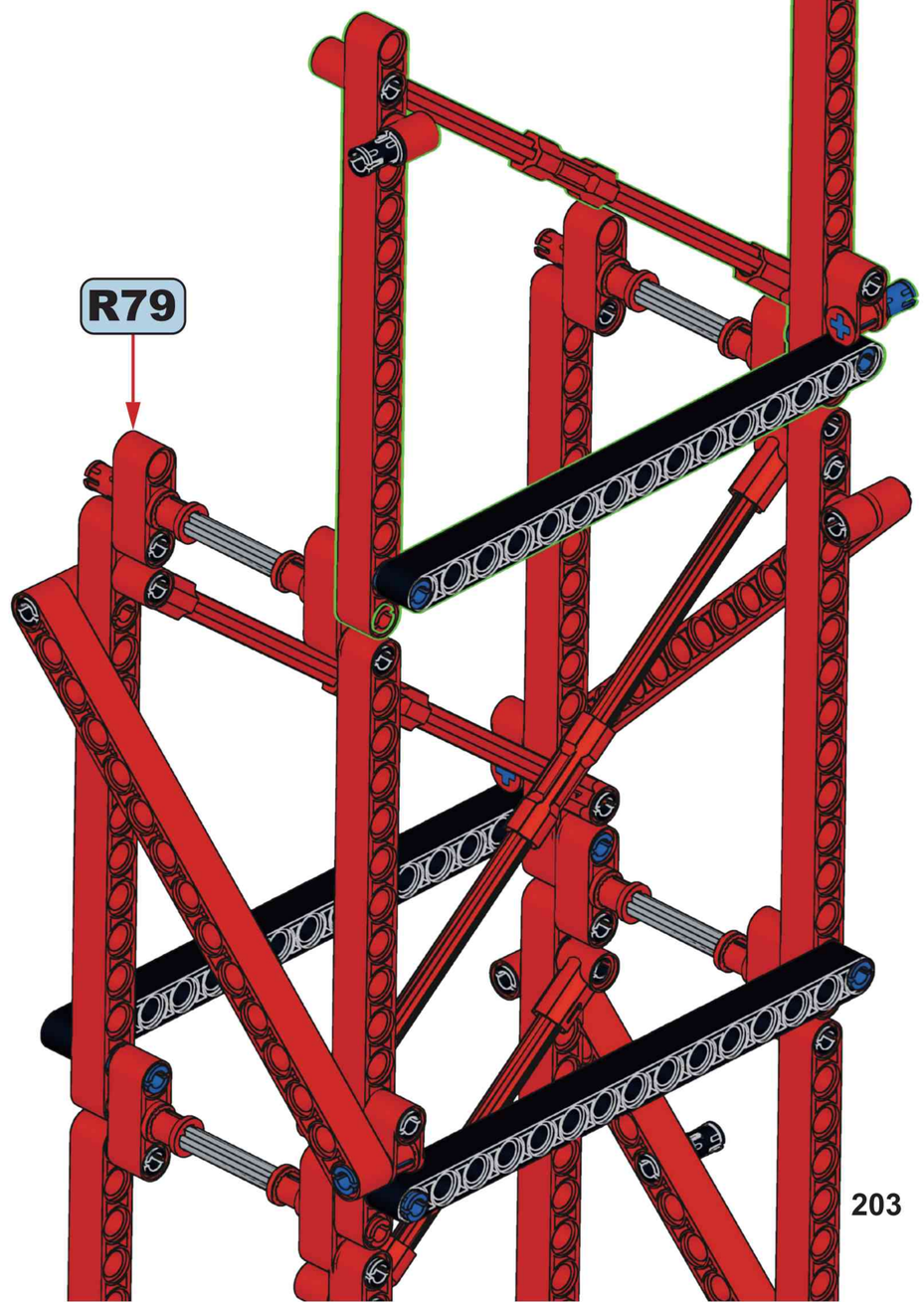

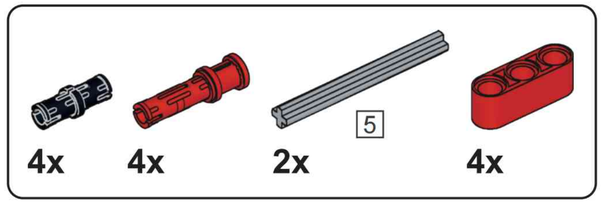

R8

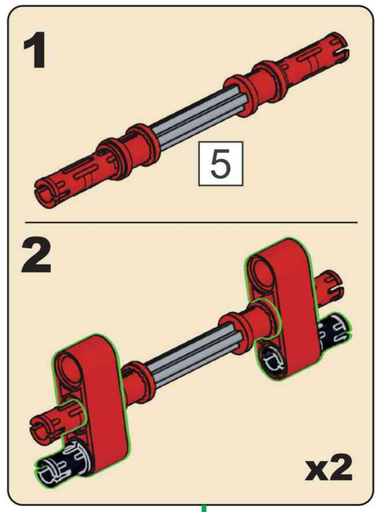

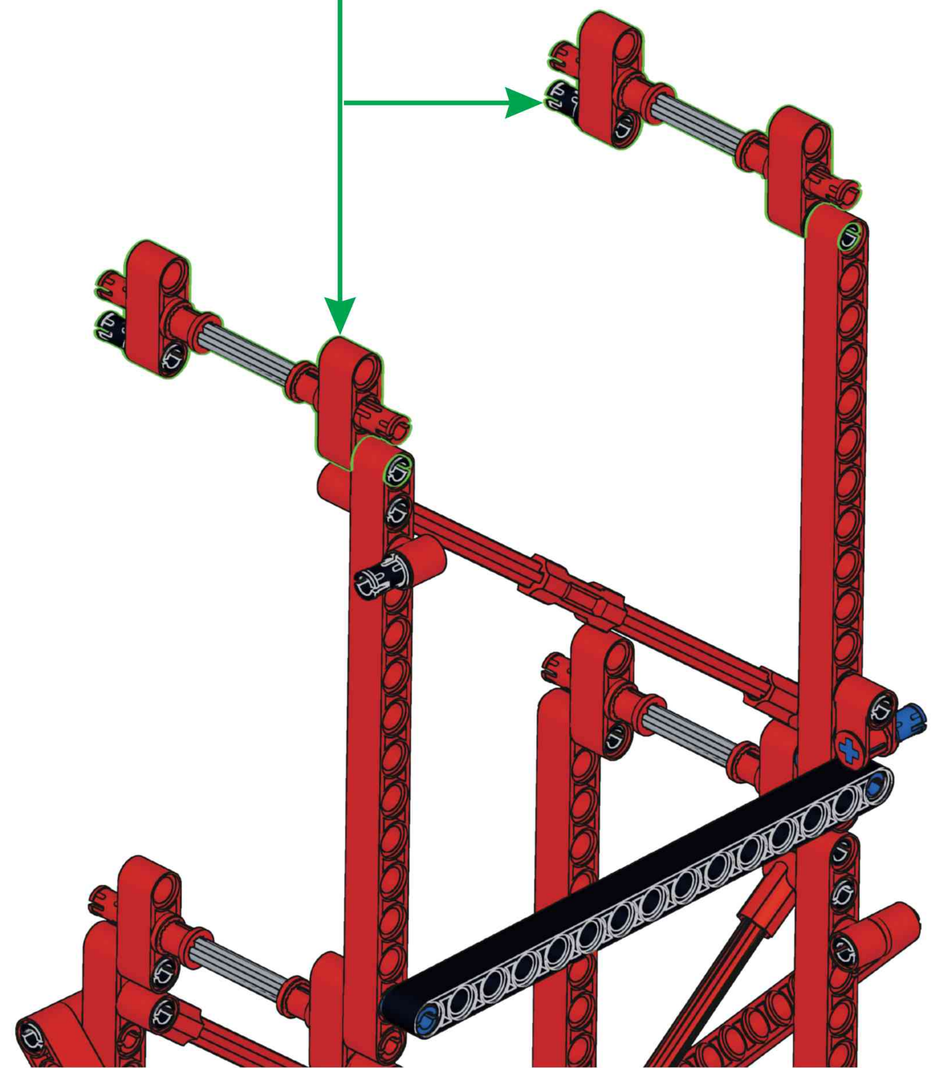

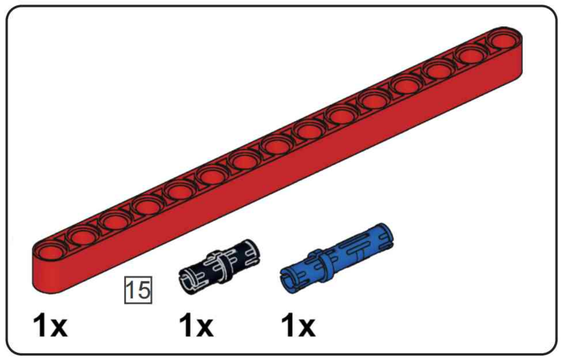

R9

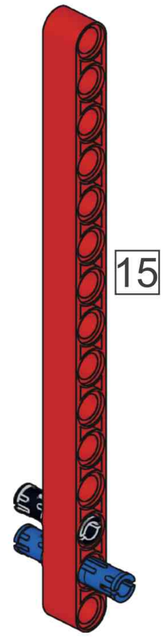

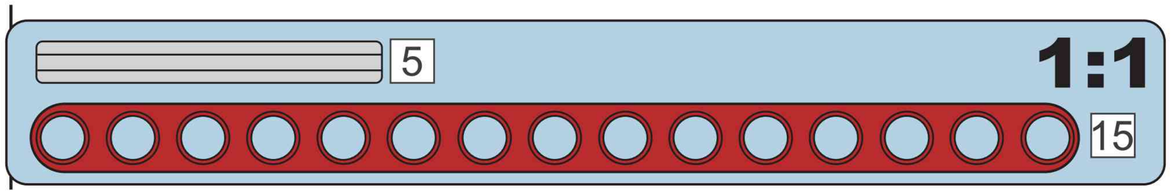

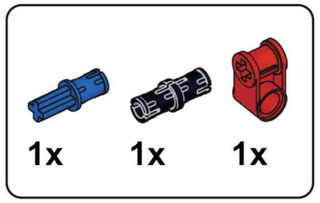

R10

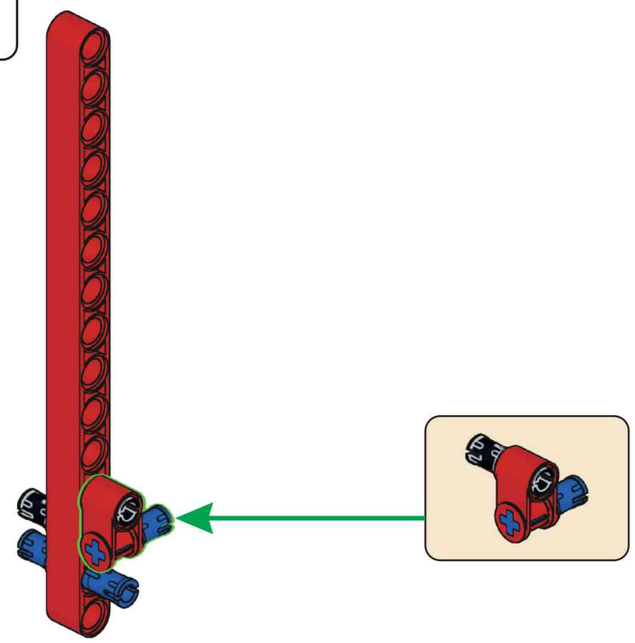

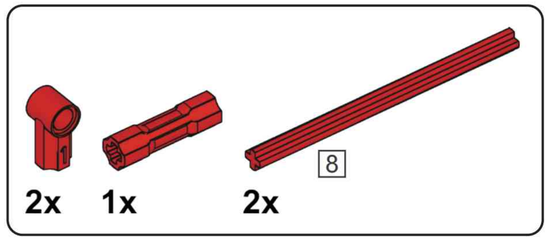

R11

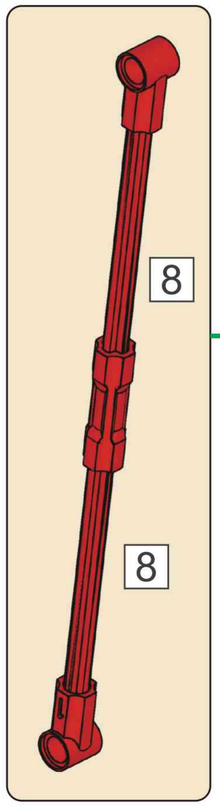

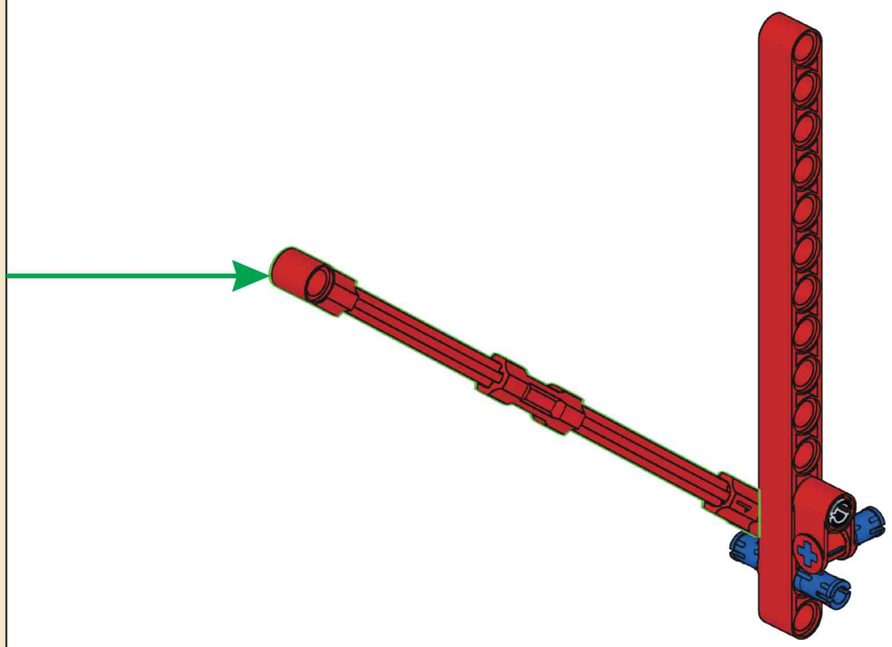

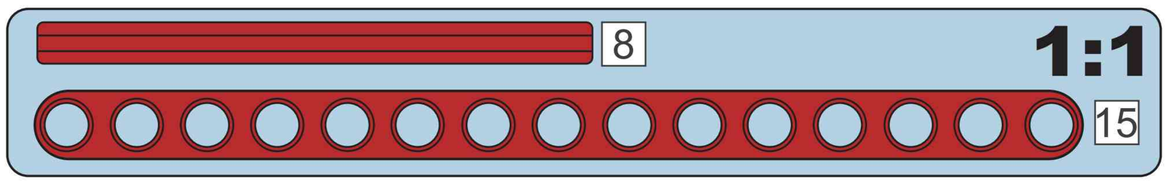

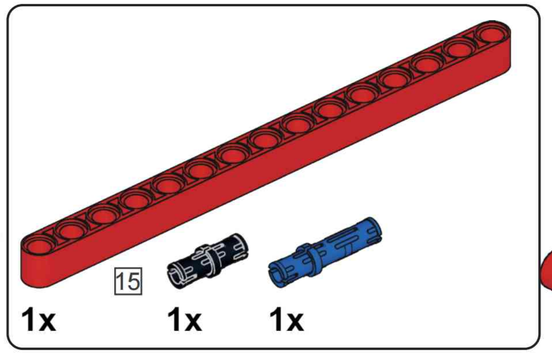

R12

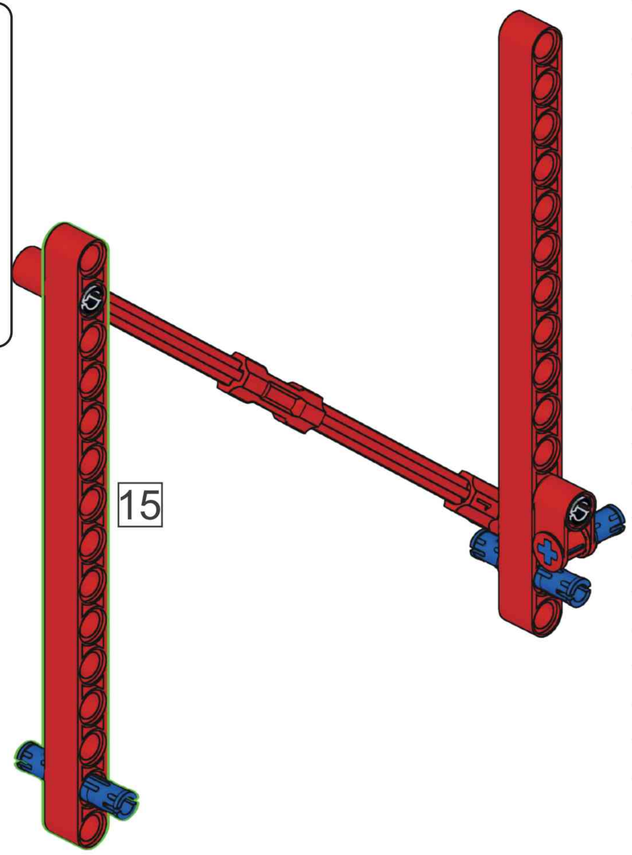

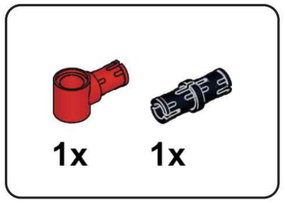

R13

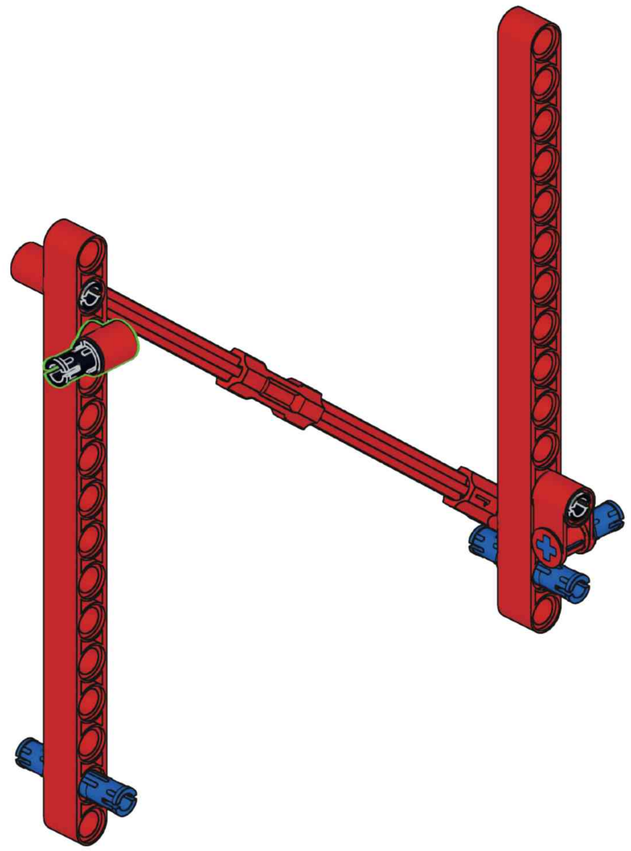

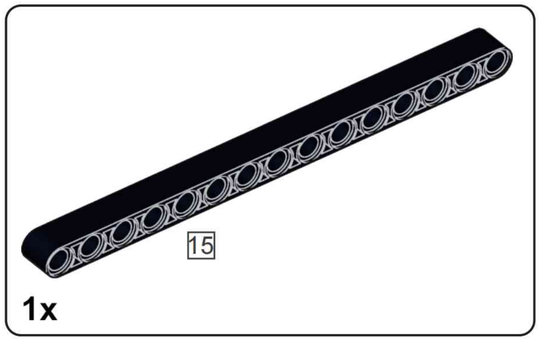

1x

R14

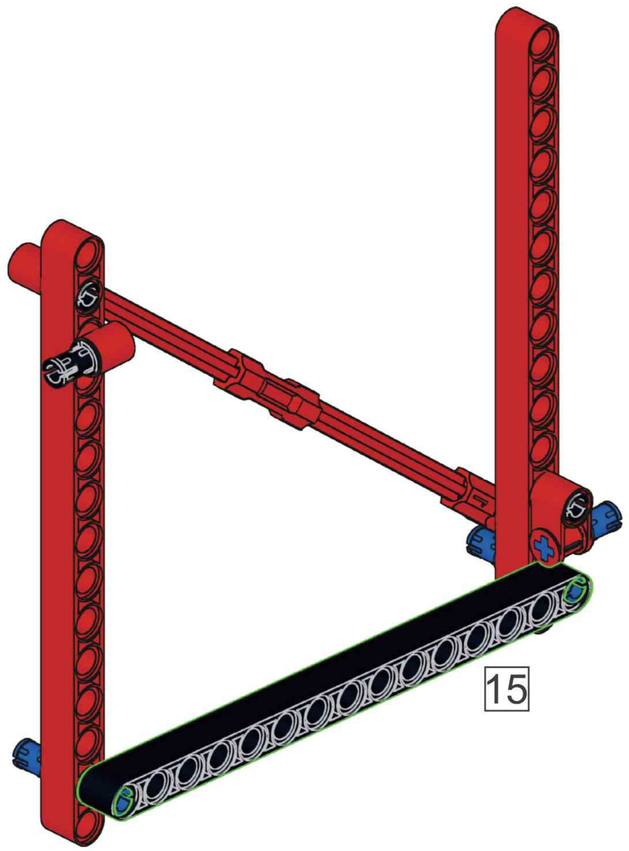

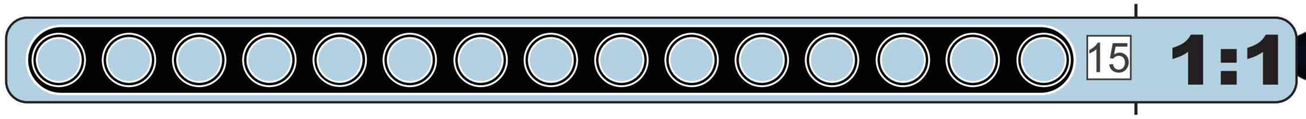

R15

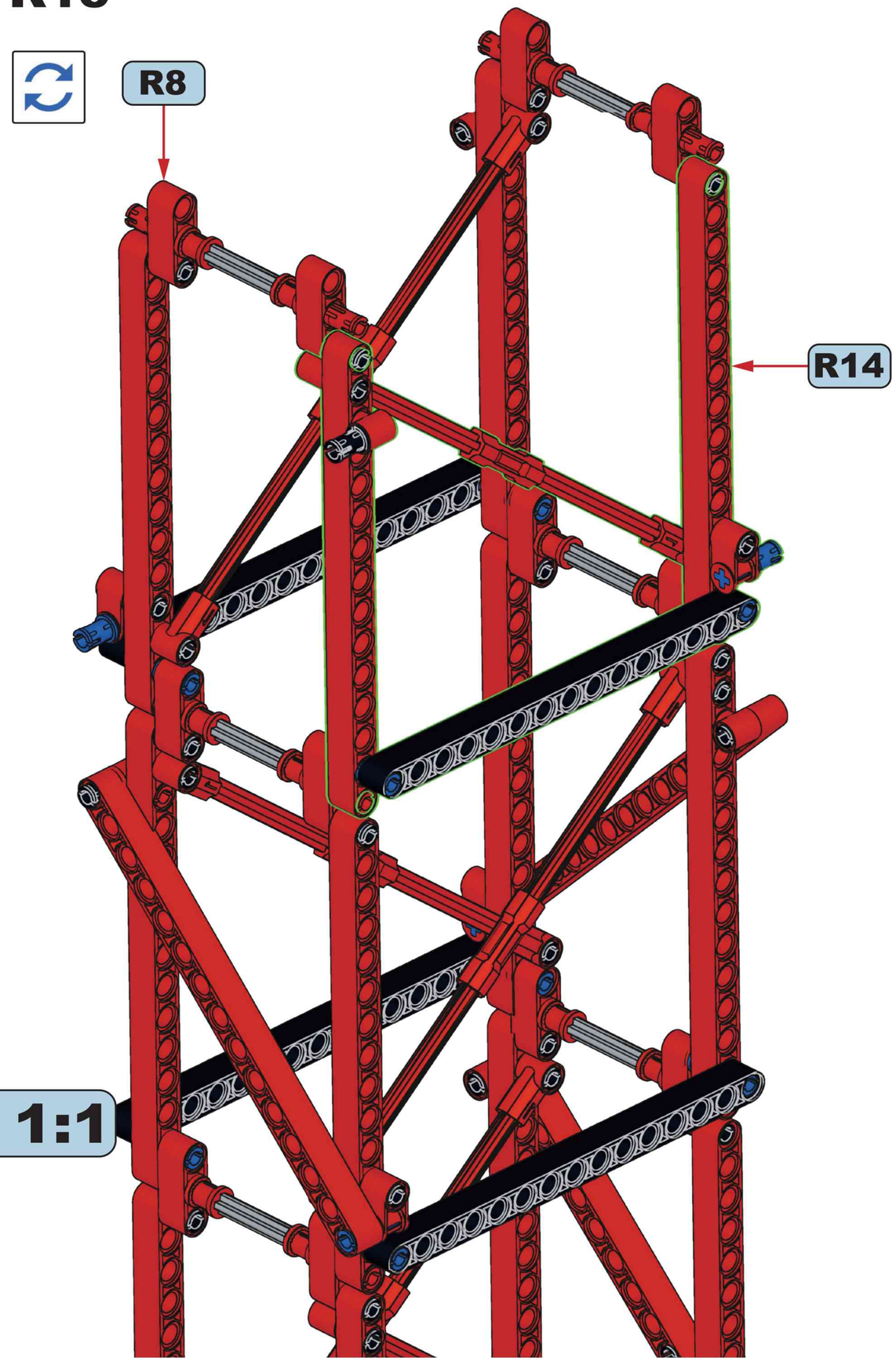

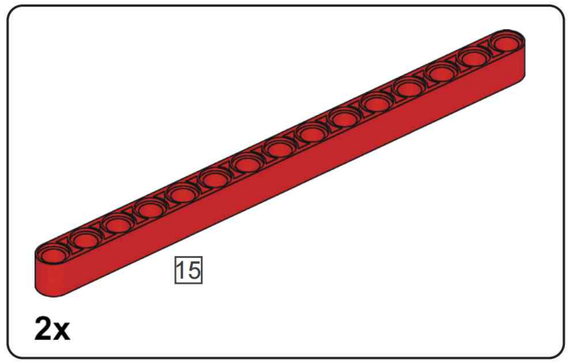

R16

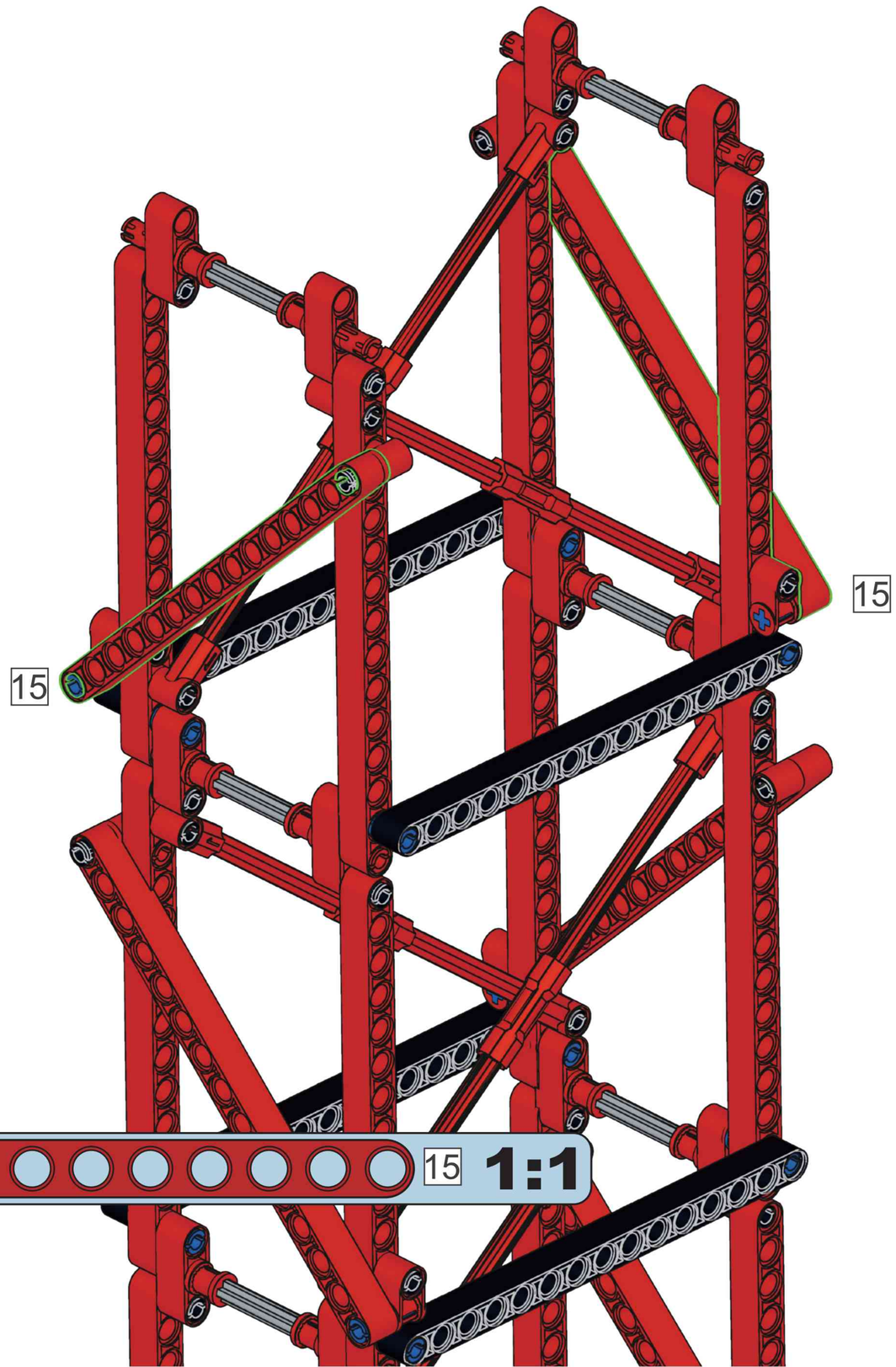

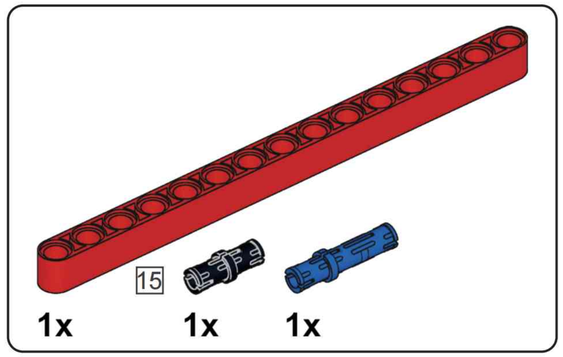

R17

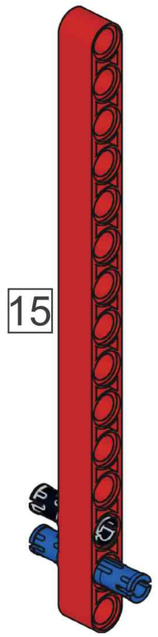

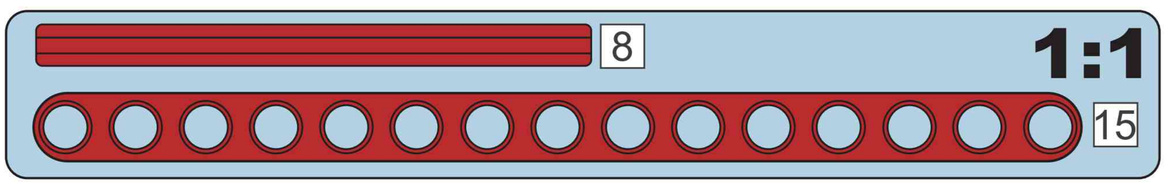

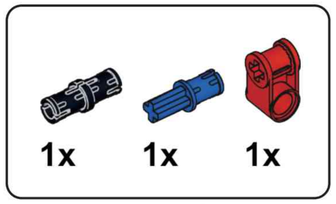

R18

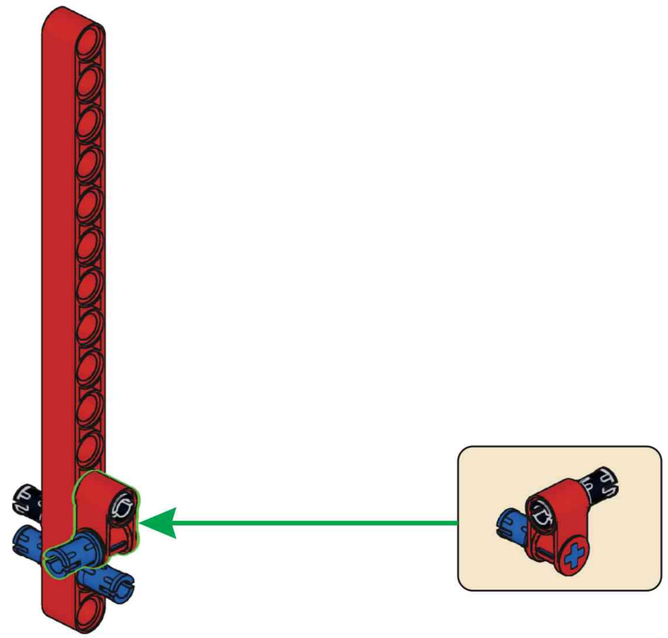

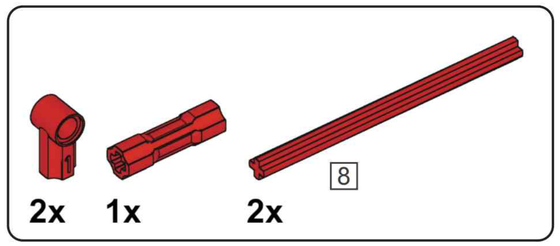

R19

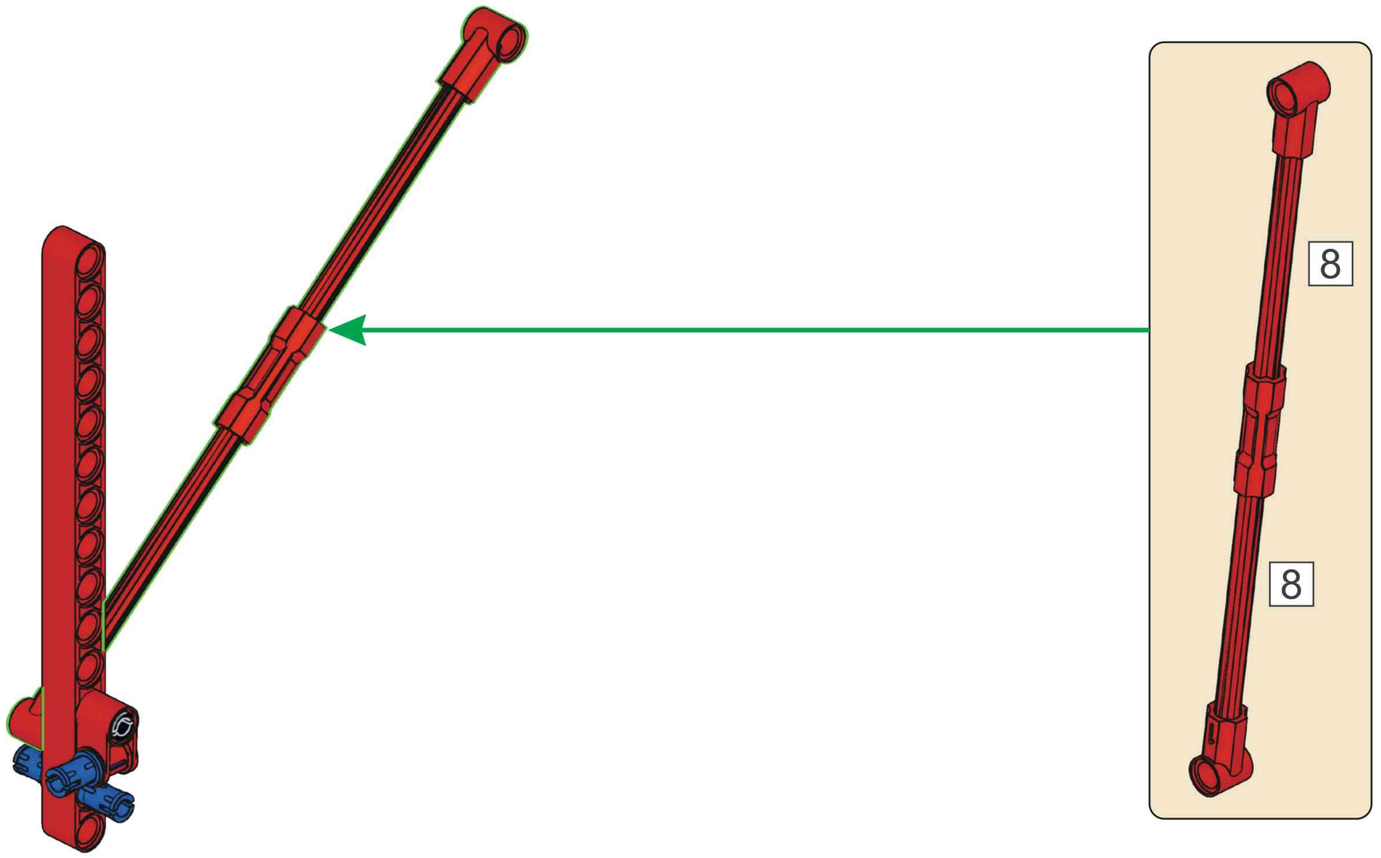

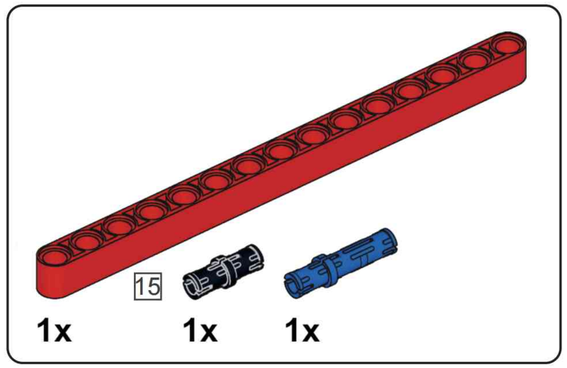

R20

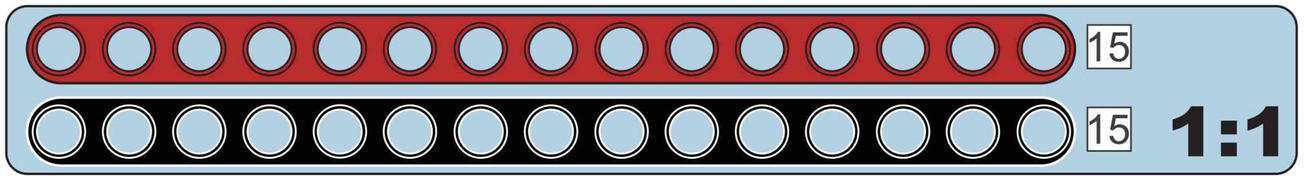

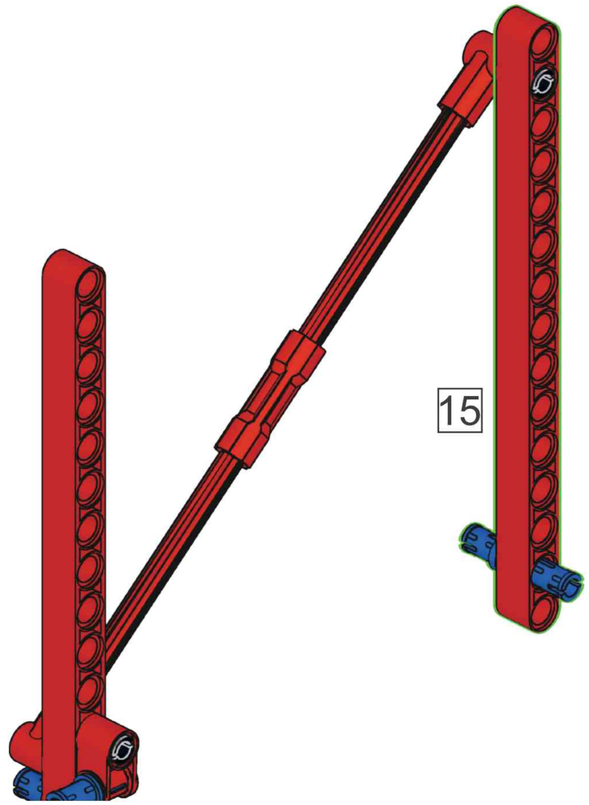

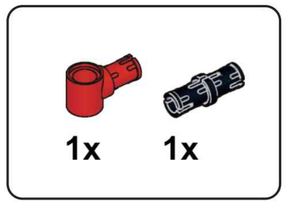

R21

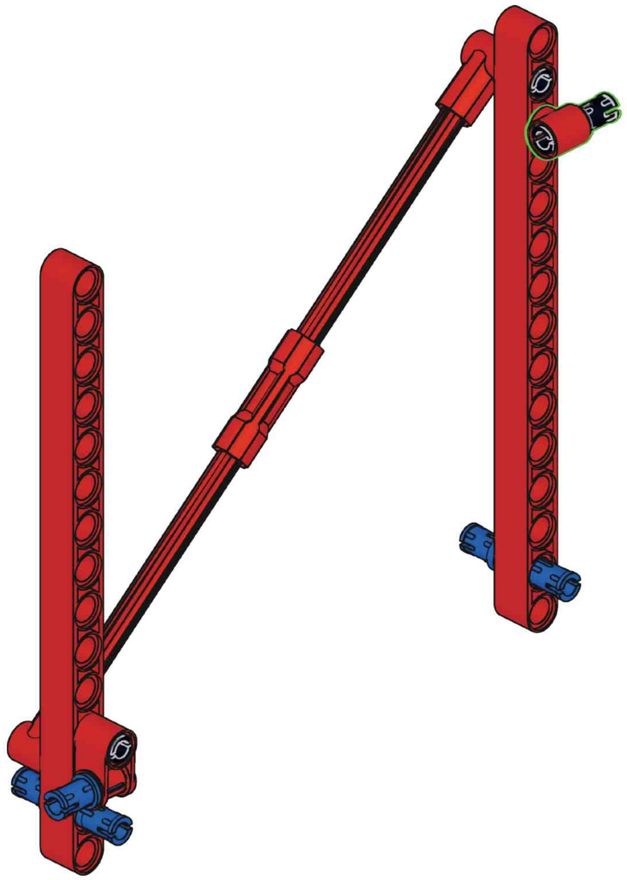

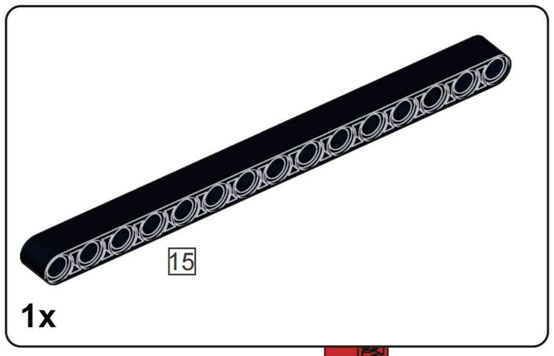

R22

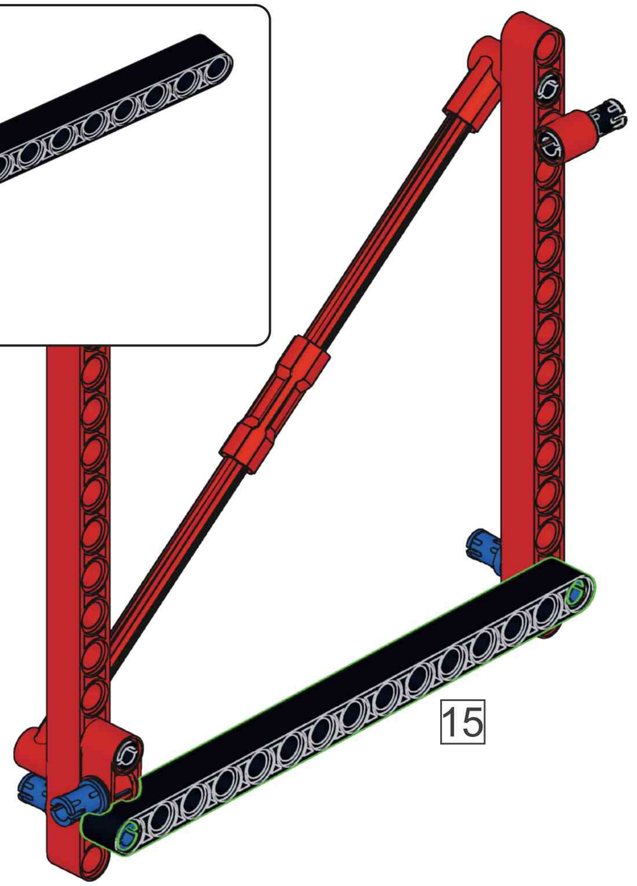

R23

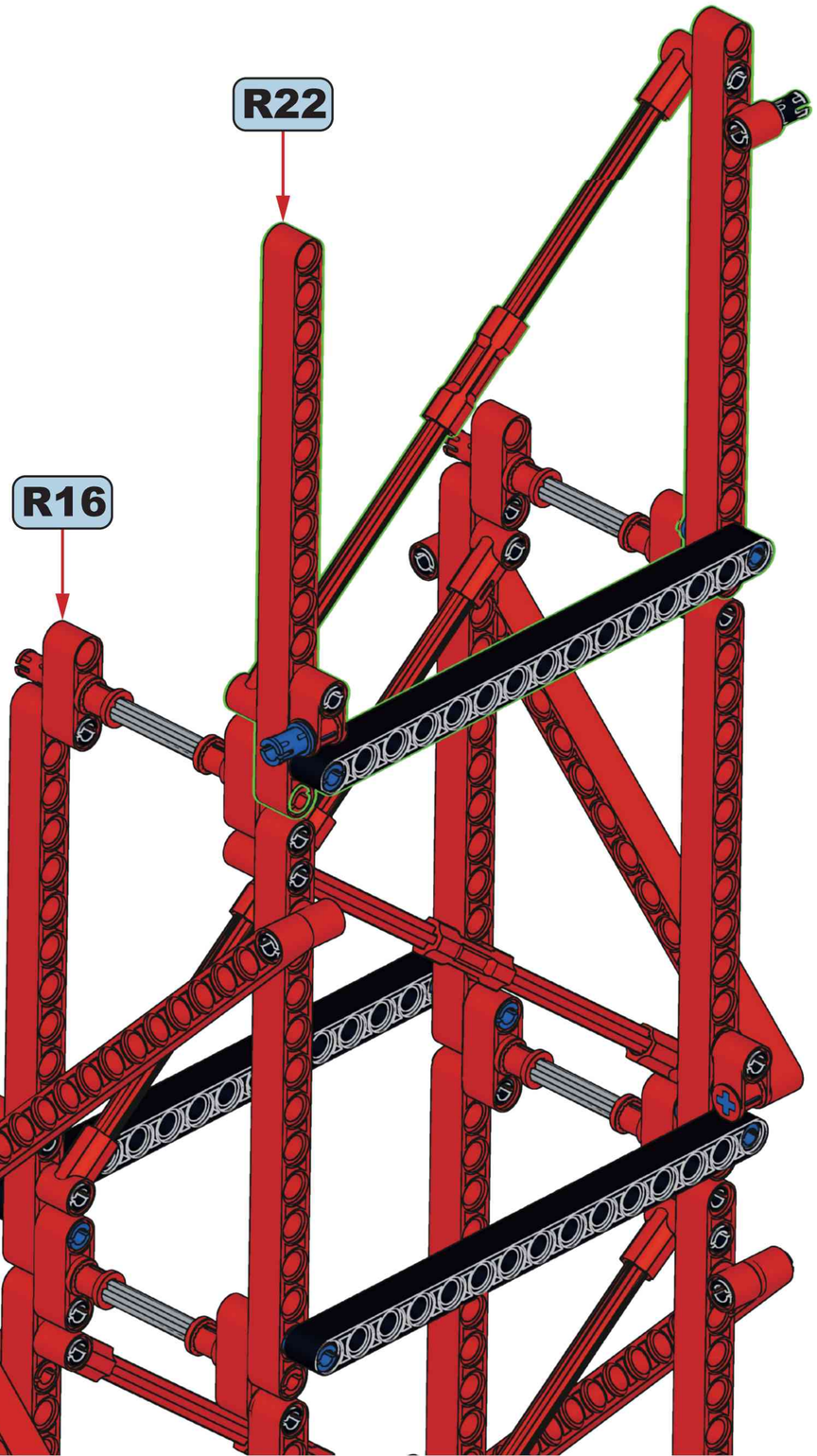

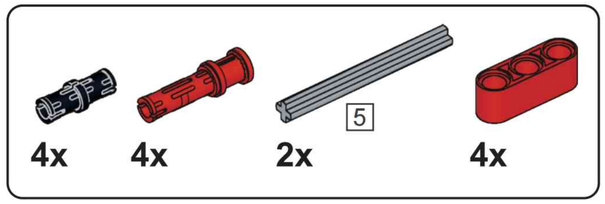

R24

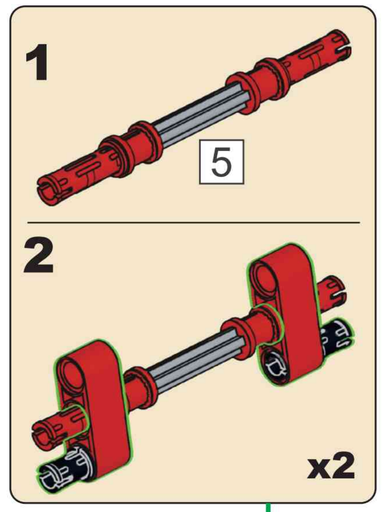

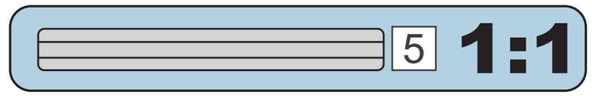

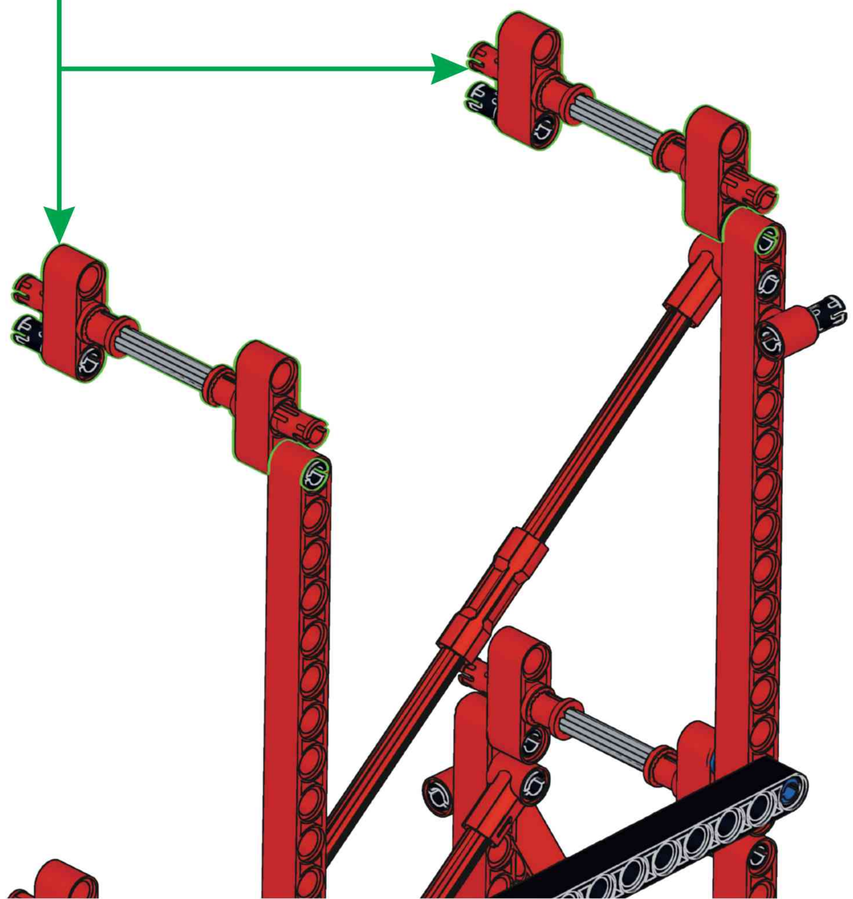

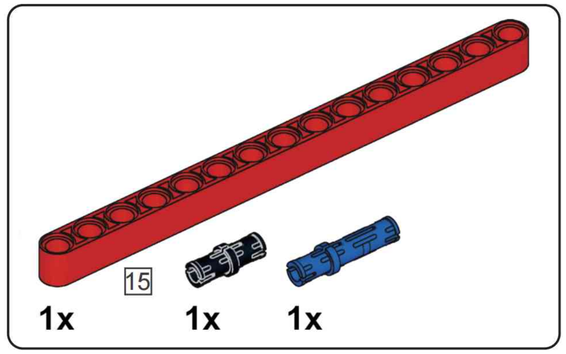

R25

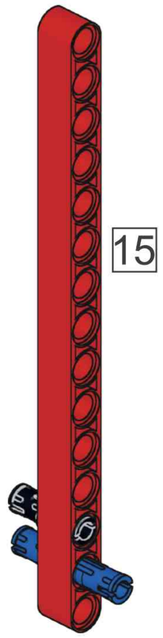

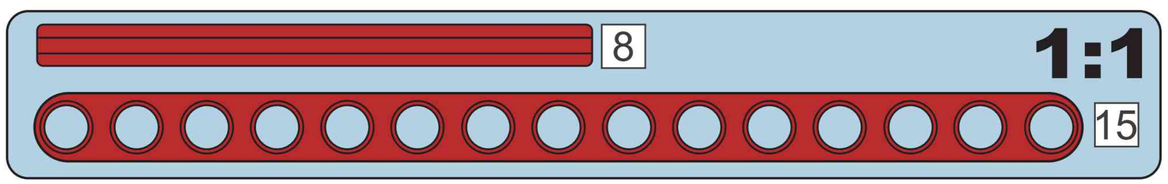

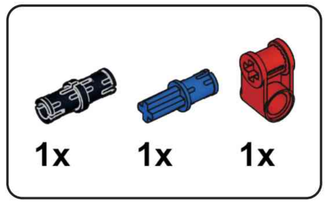

R26

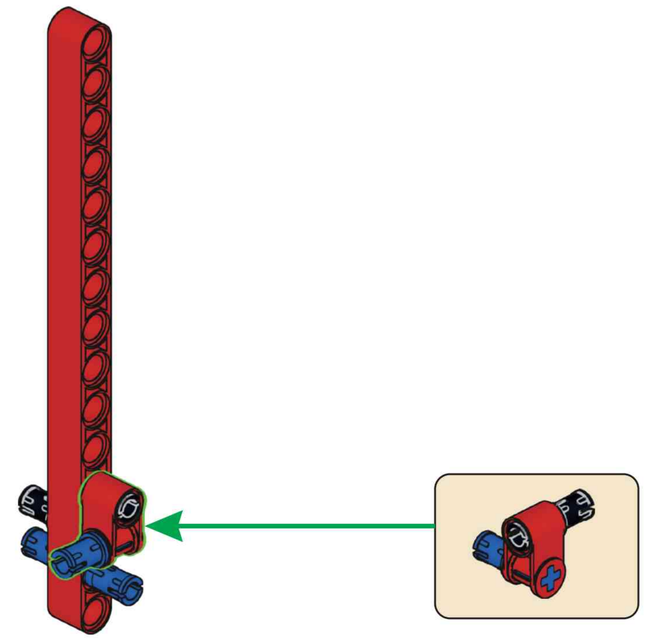

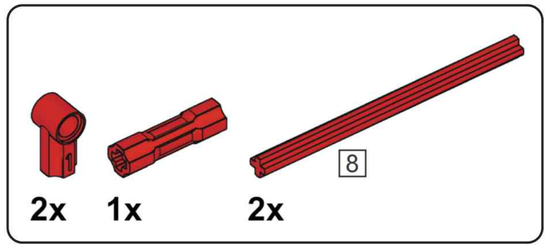

R27

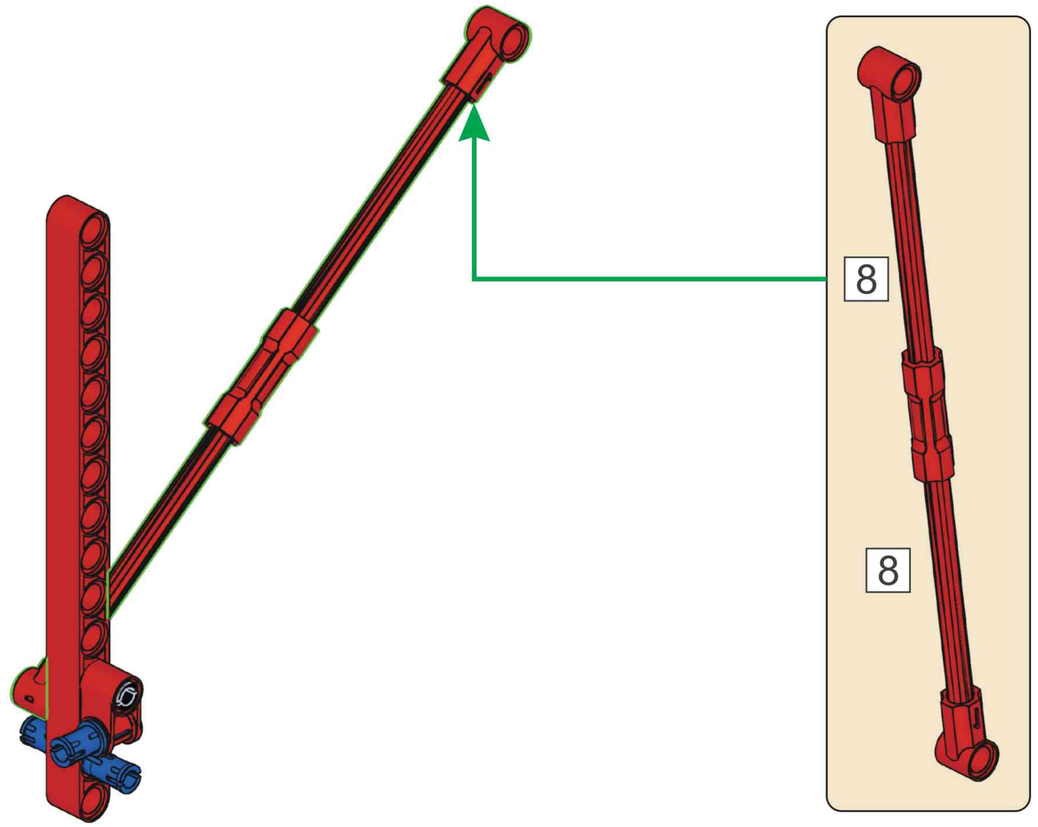

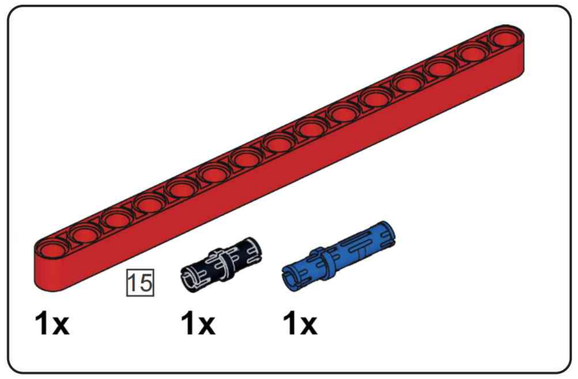

R28

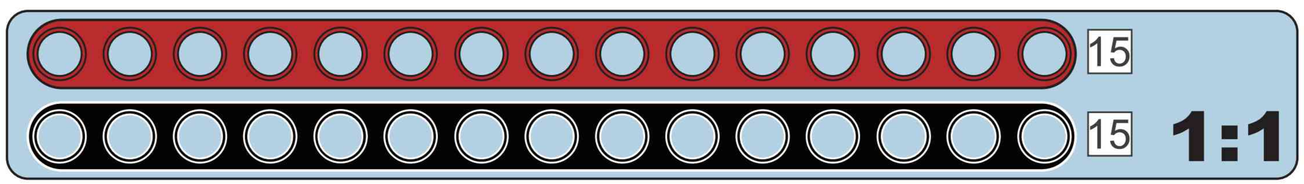

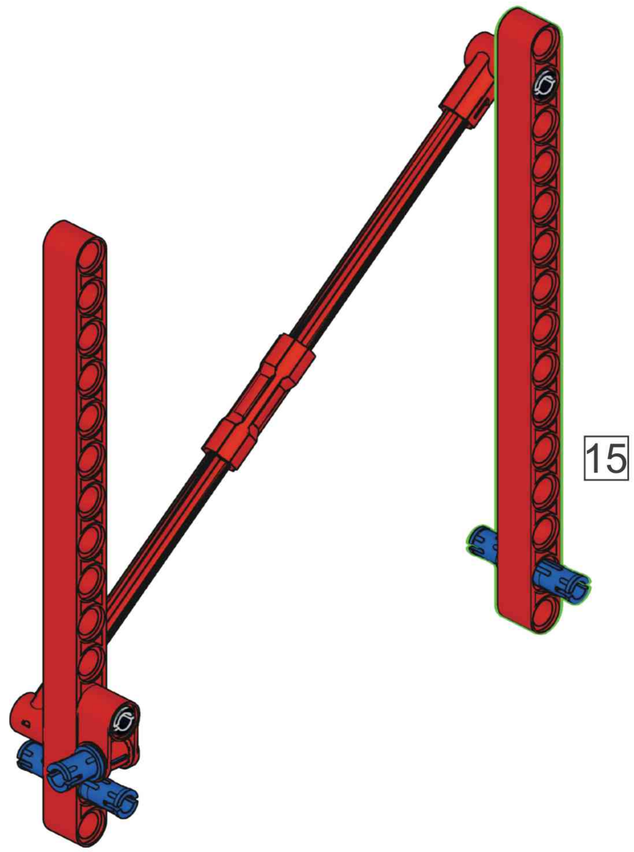

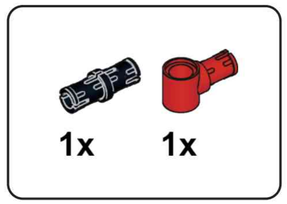

R29

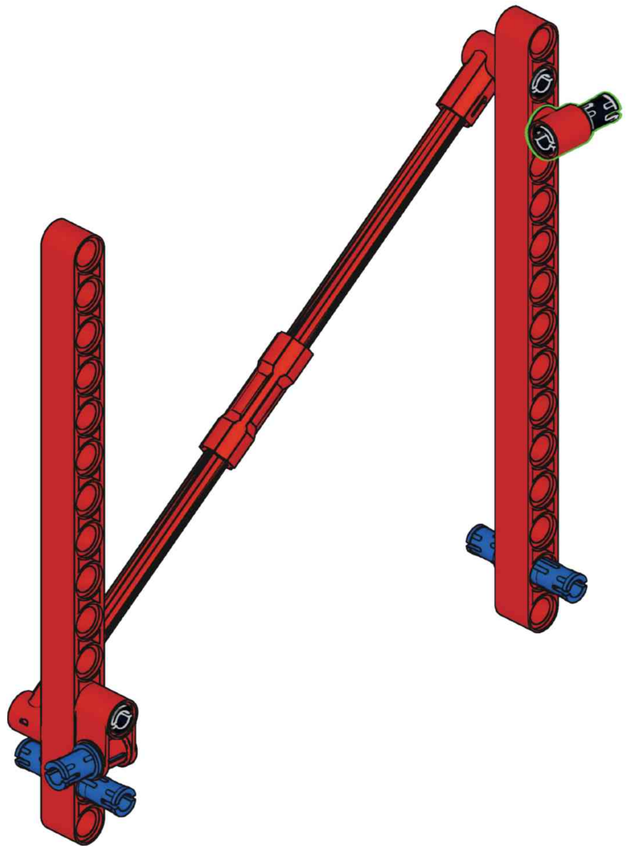

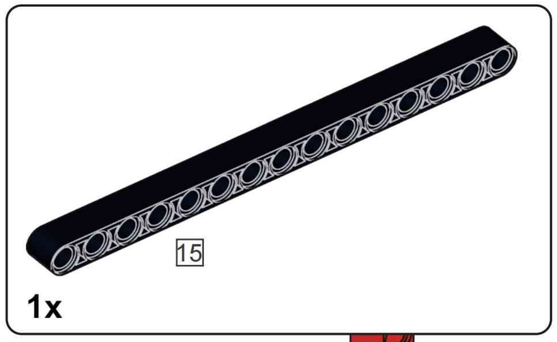

R30

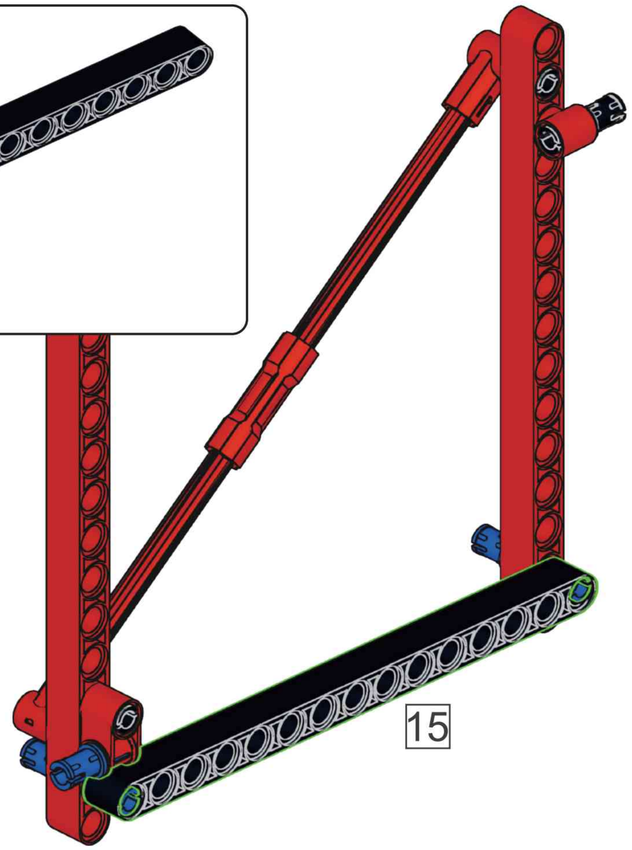

R31

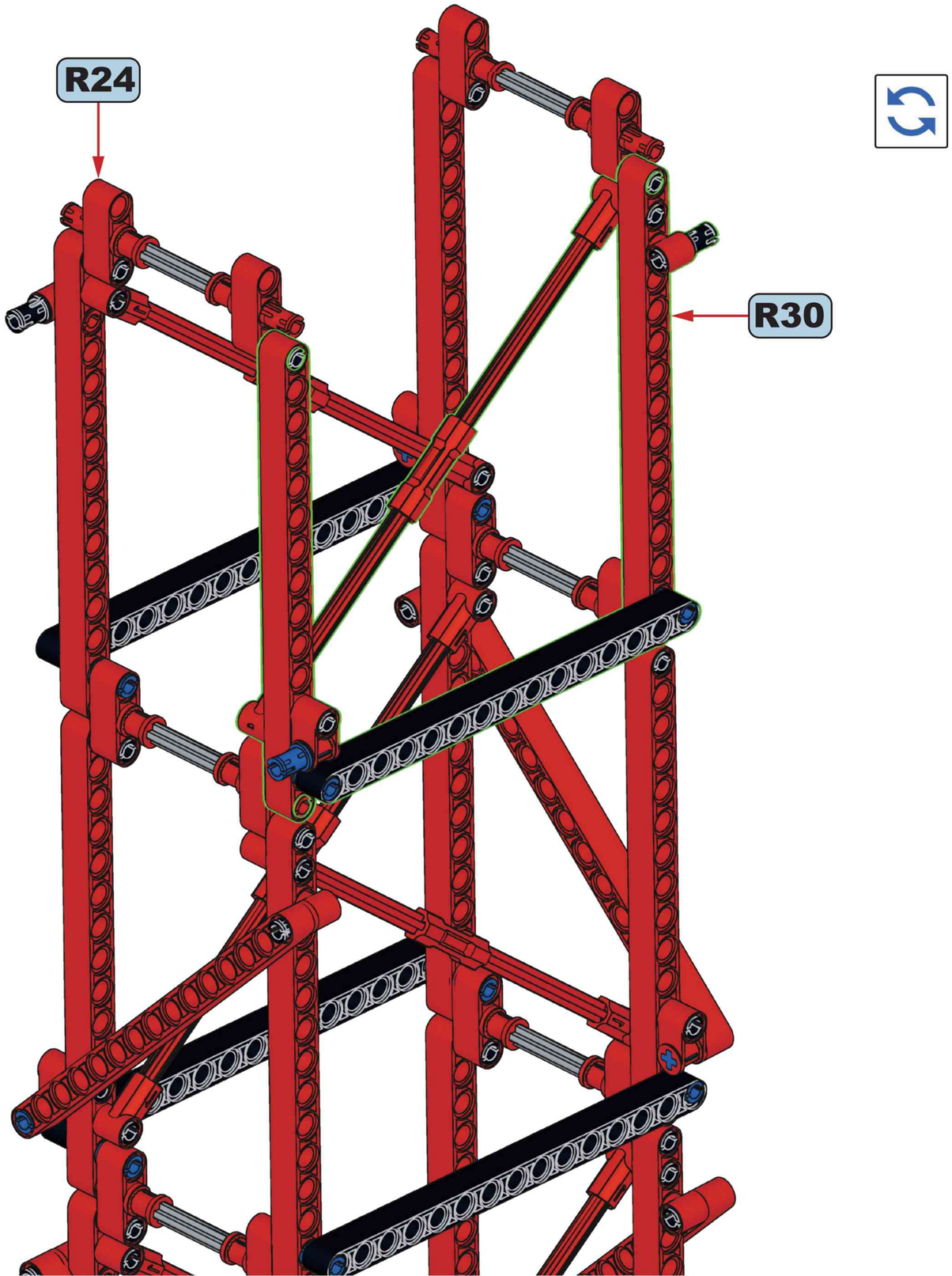

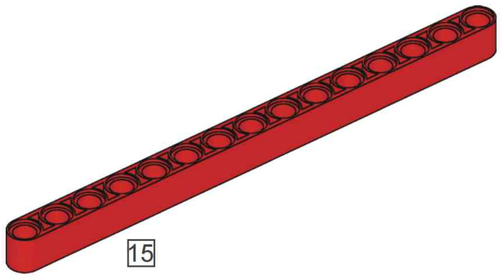

2x

R32

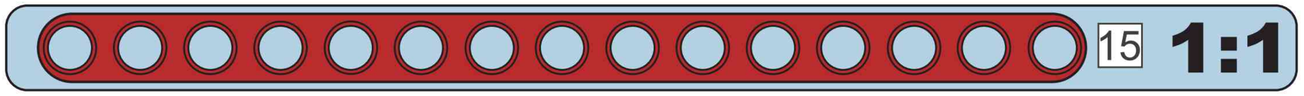

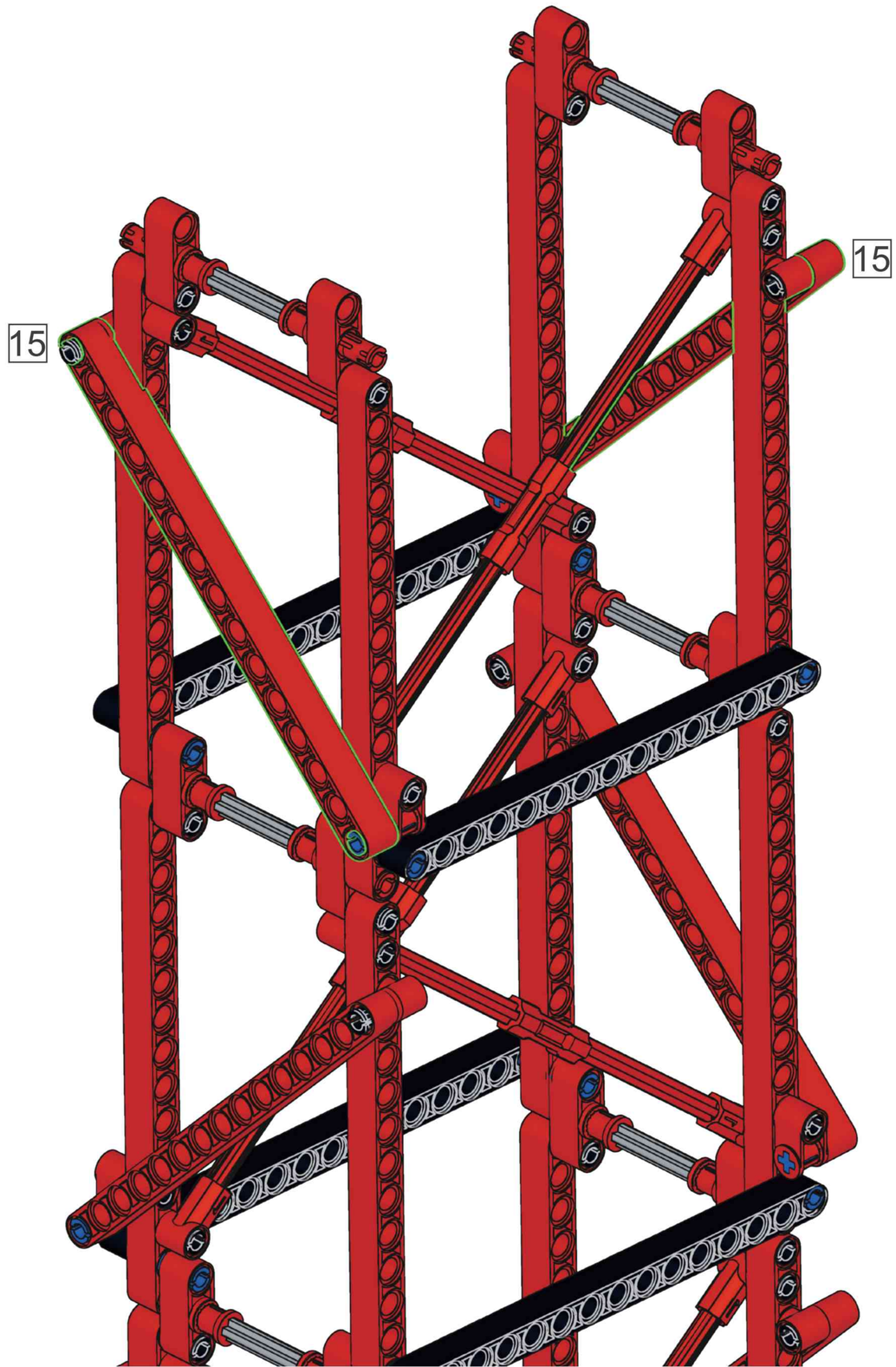

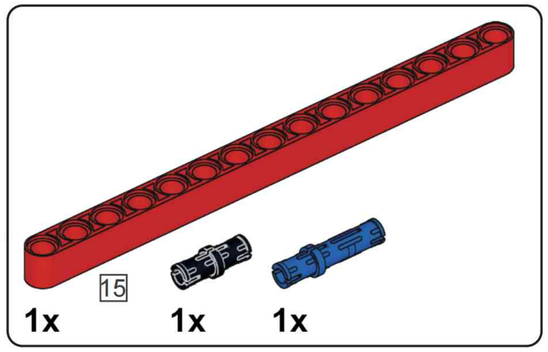

R33

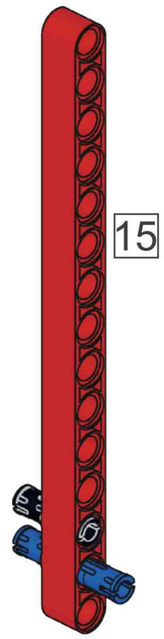

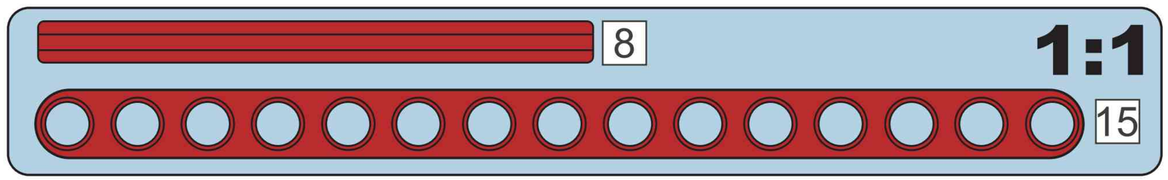

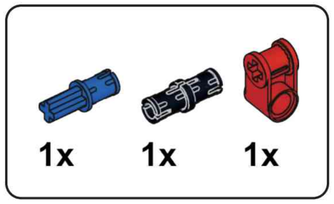

R34

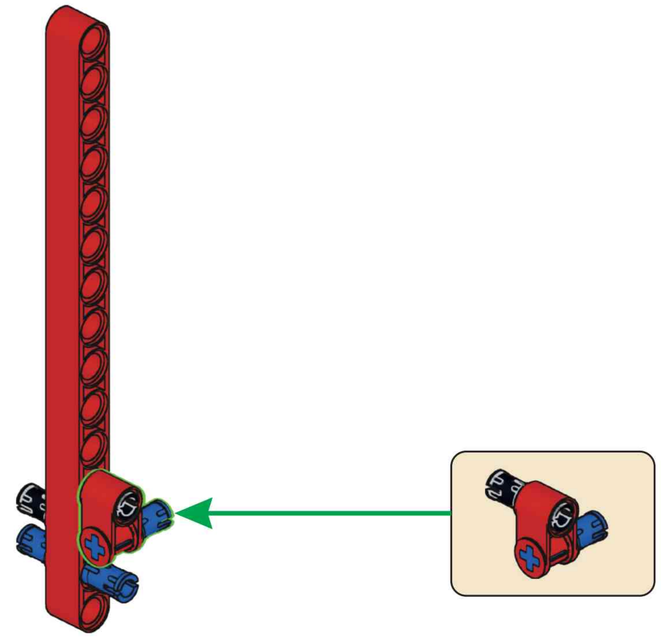

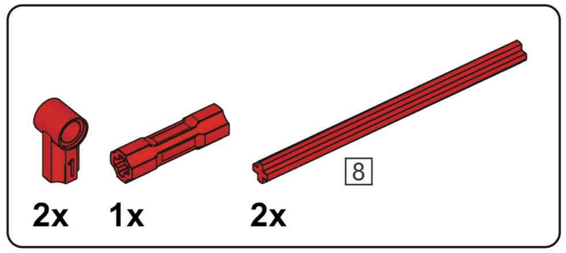

R35

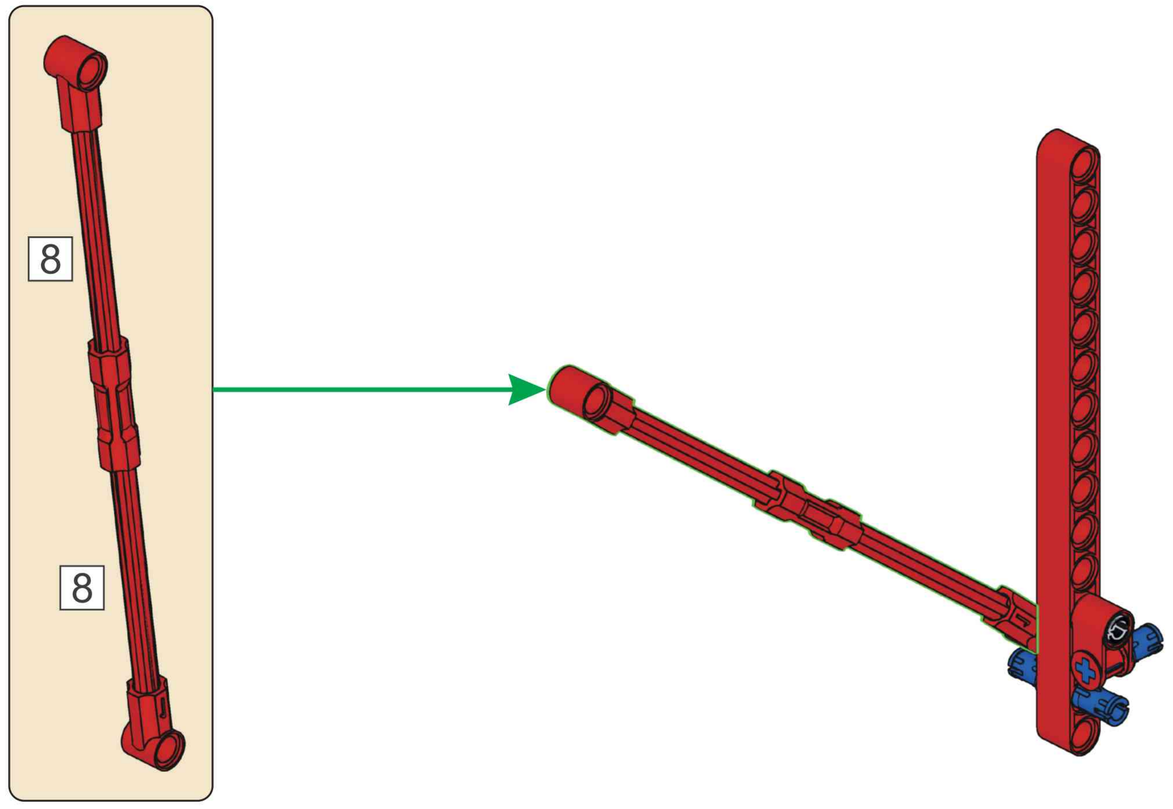

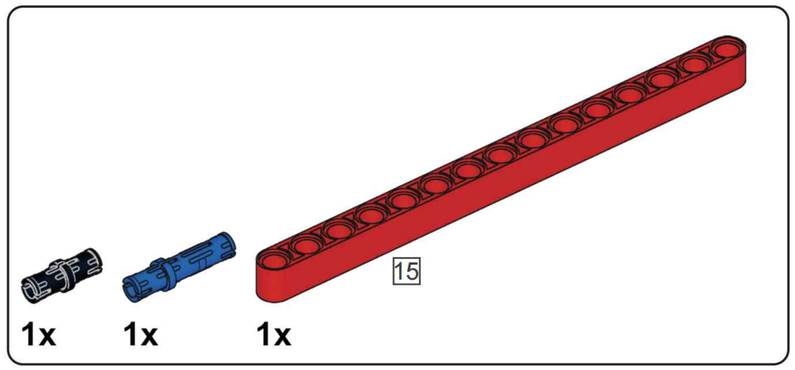

R36

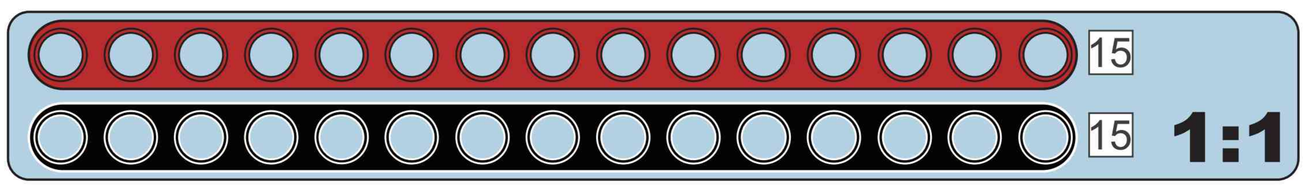

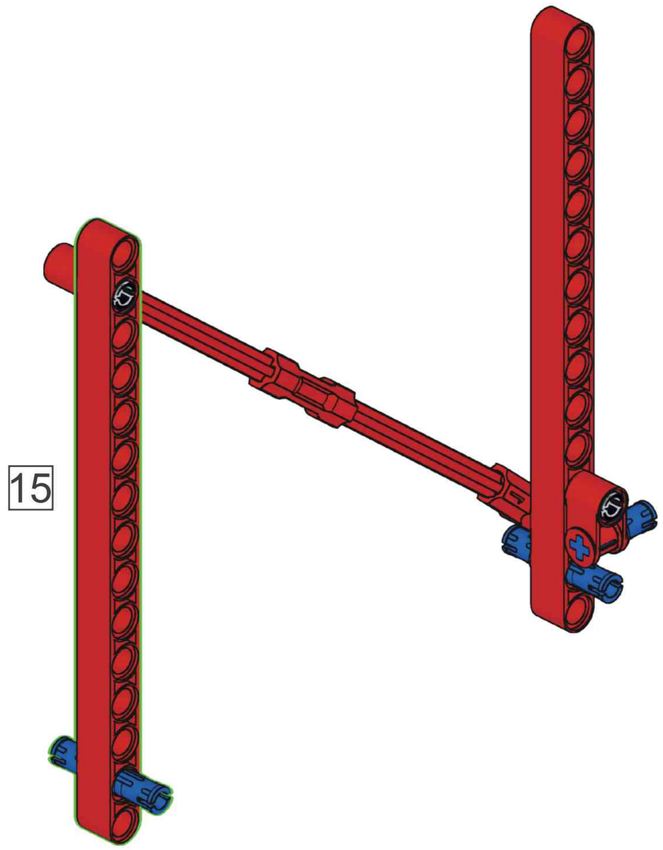

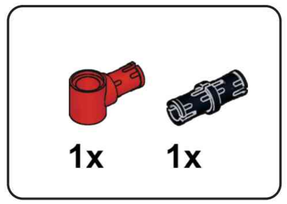

R37

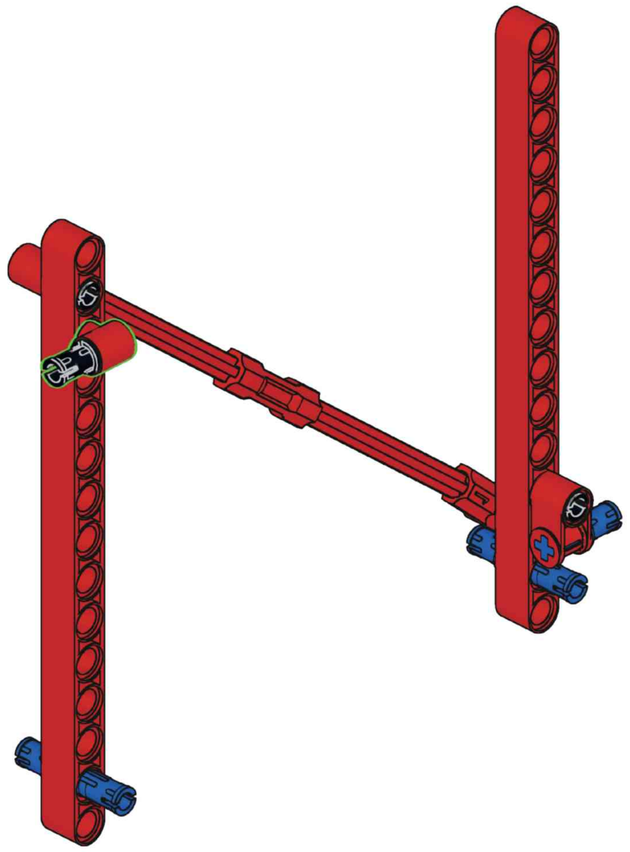

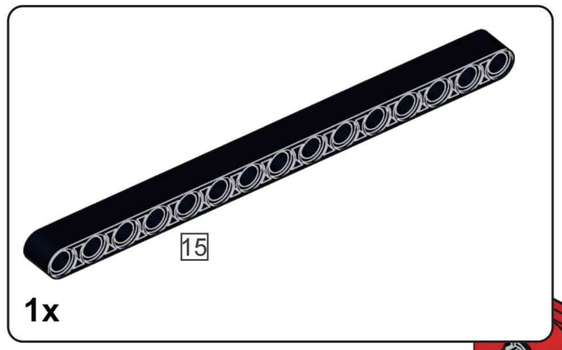

R38

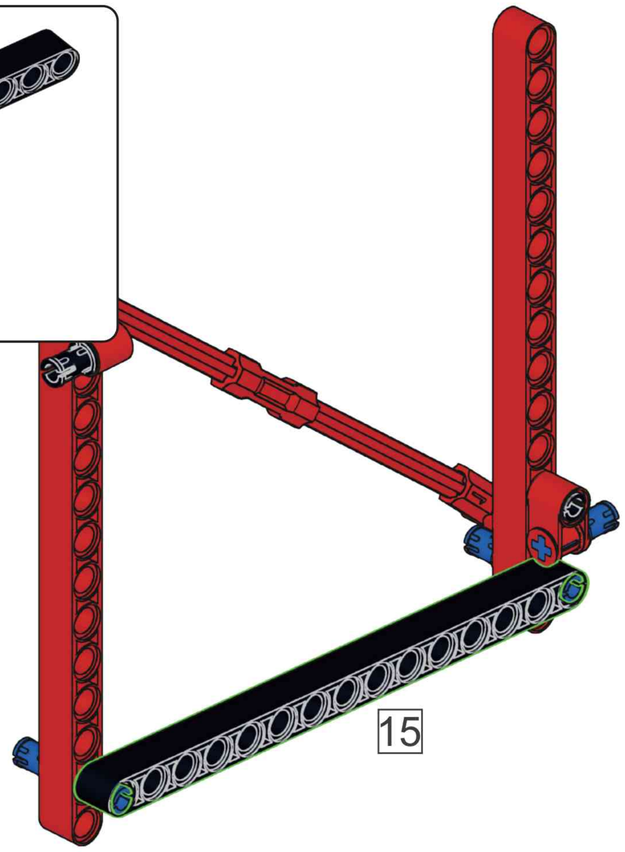

R39

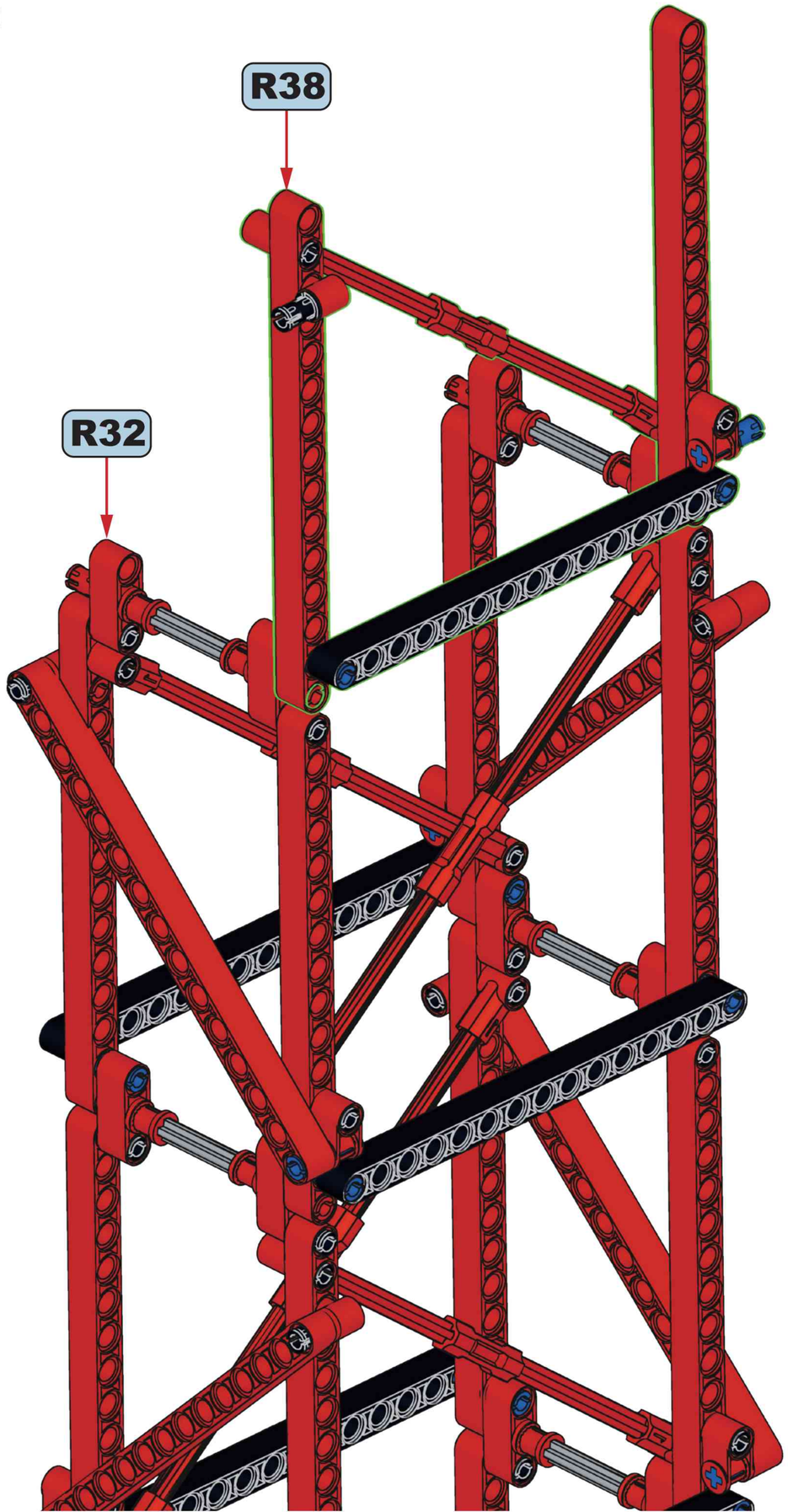

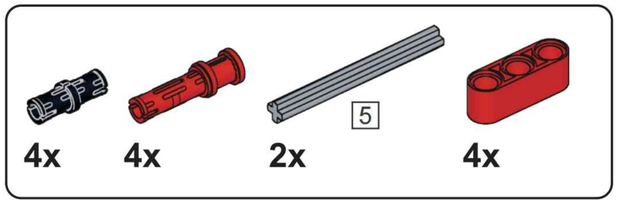

R40

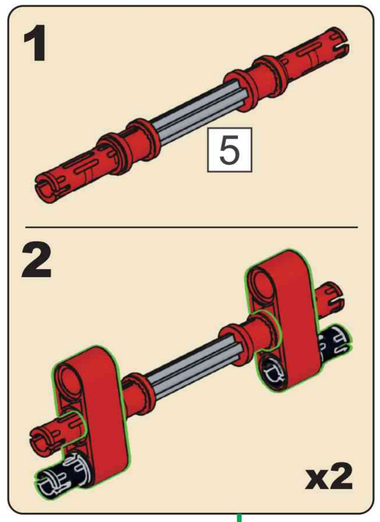

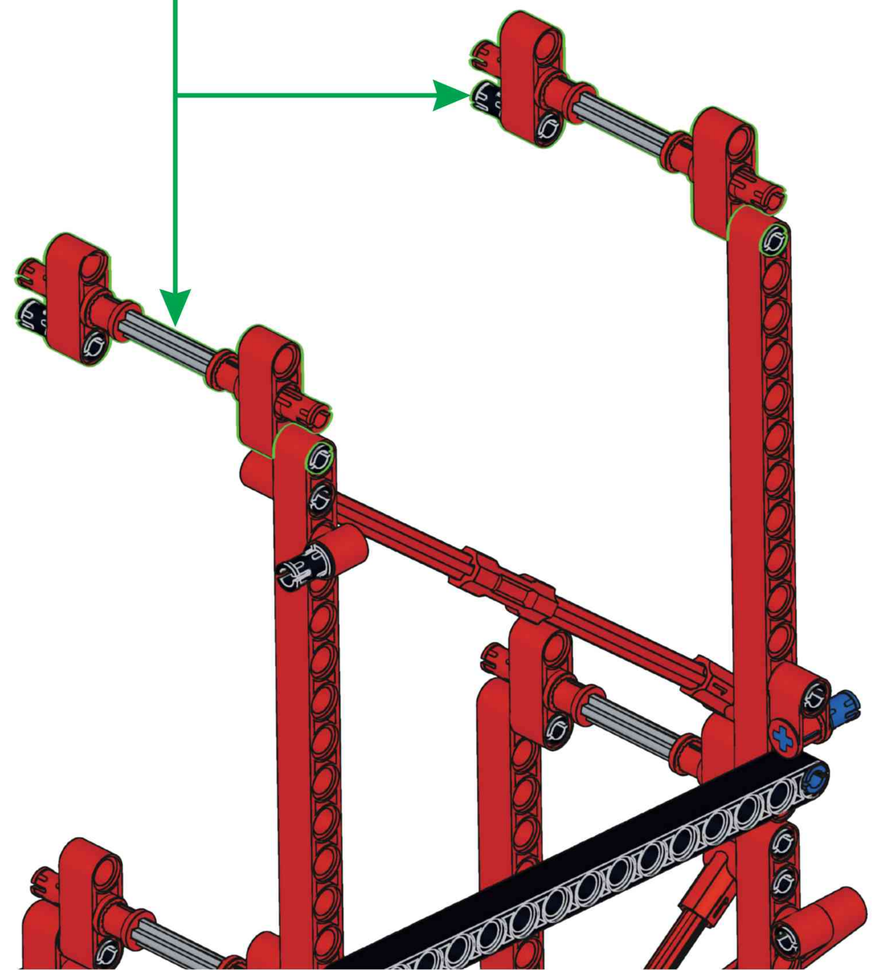

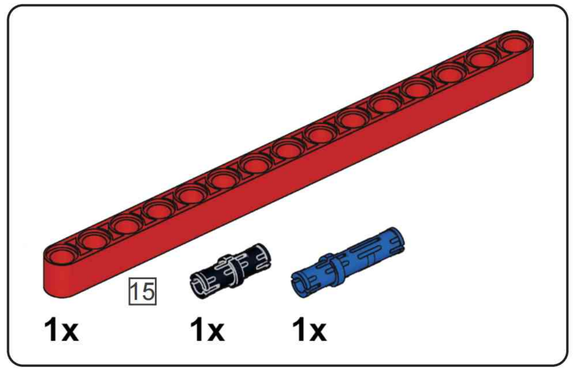

R41

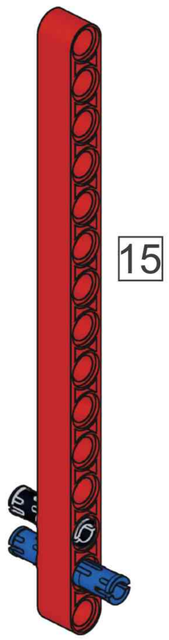

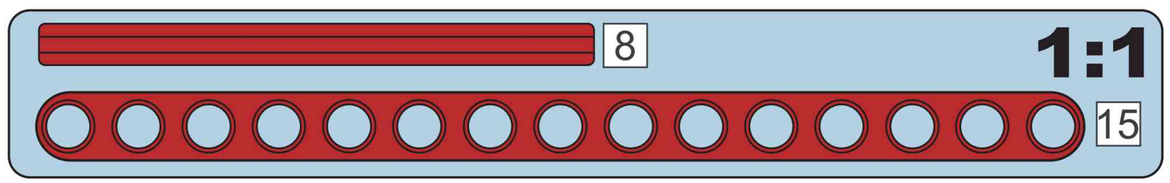

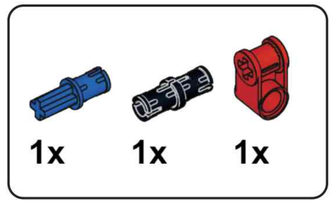

R42

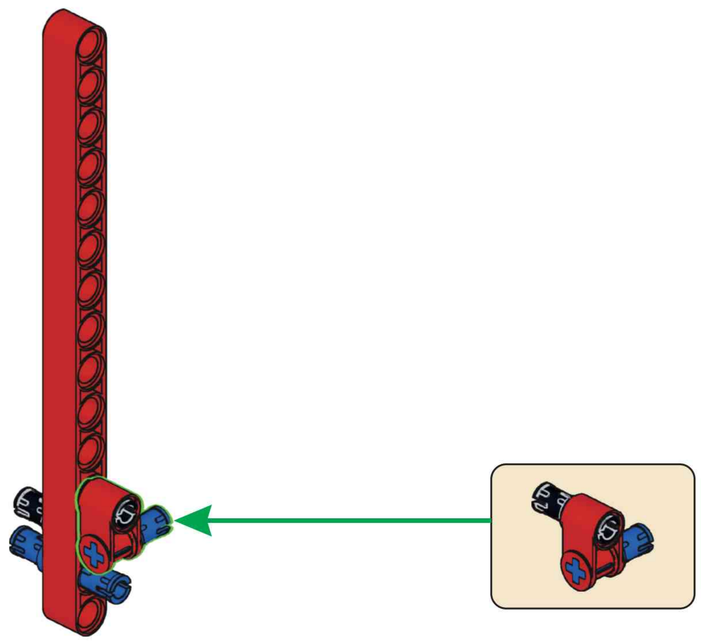

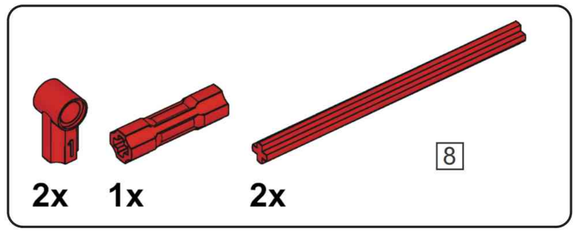

R43

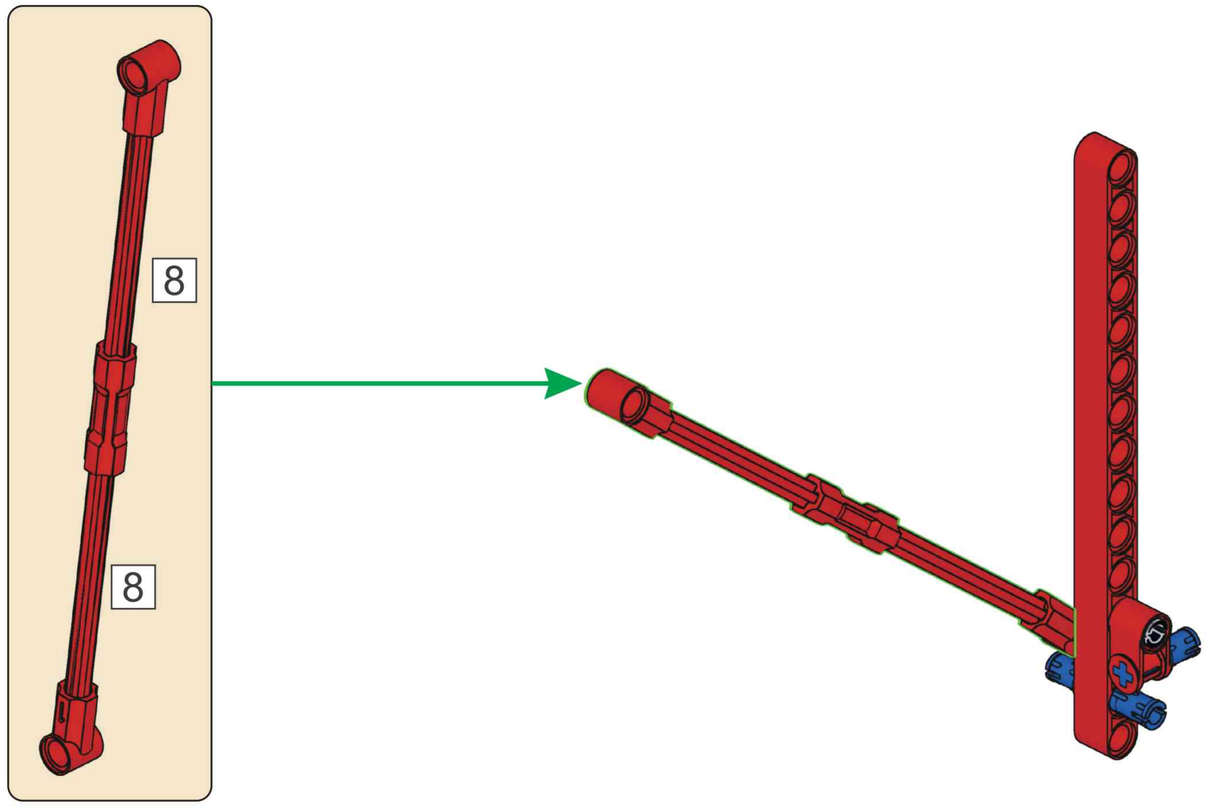

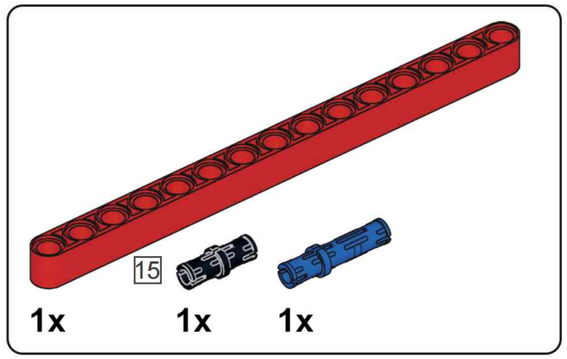

R44

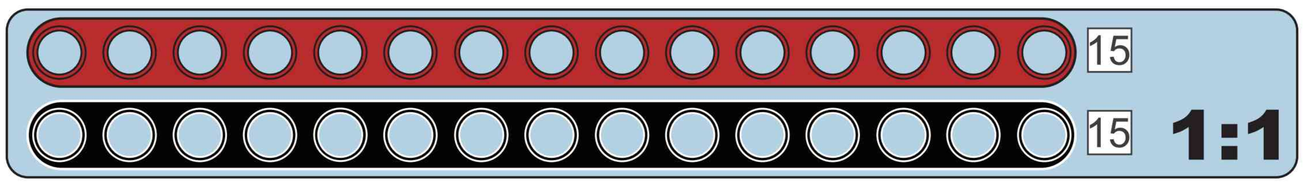

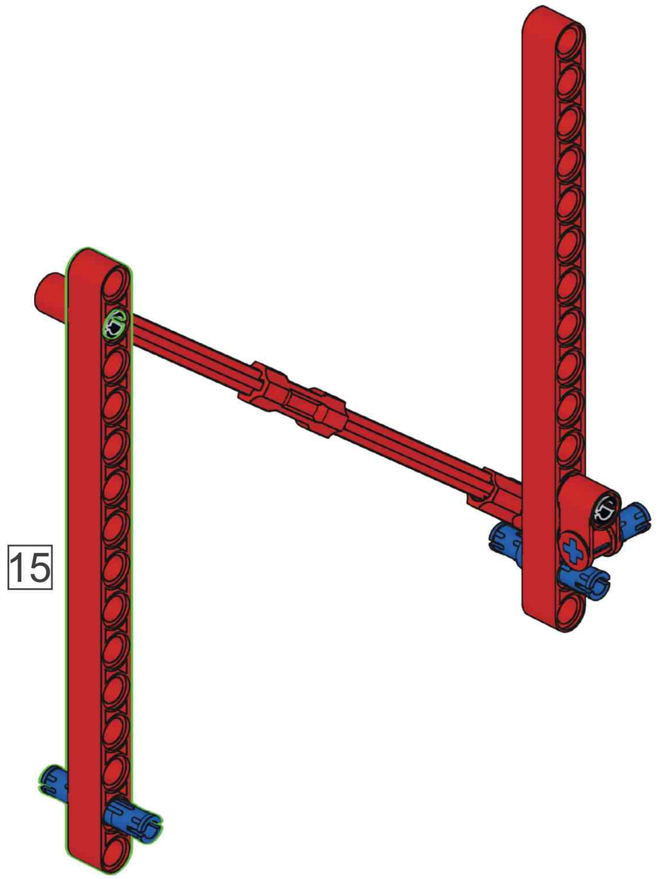

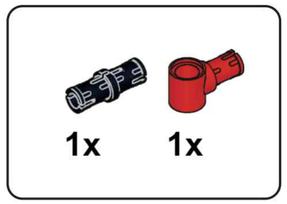

R45

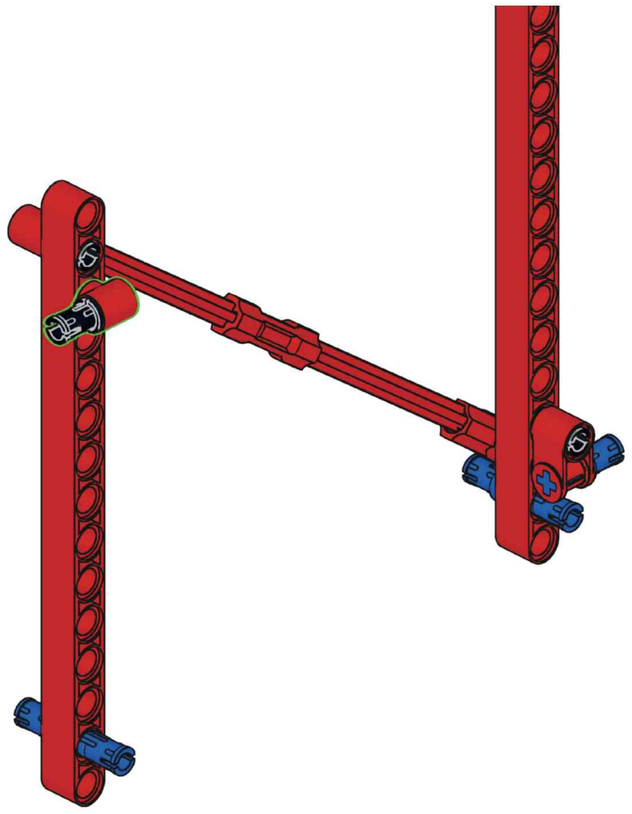

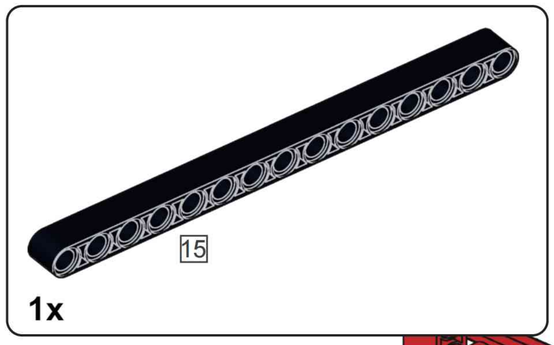

R46

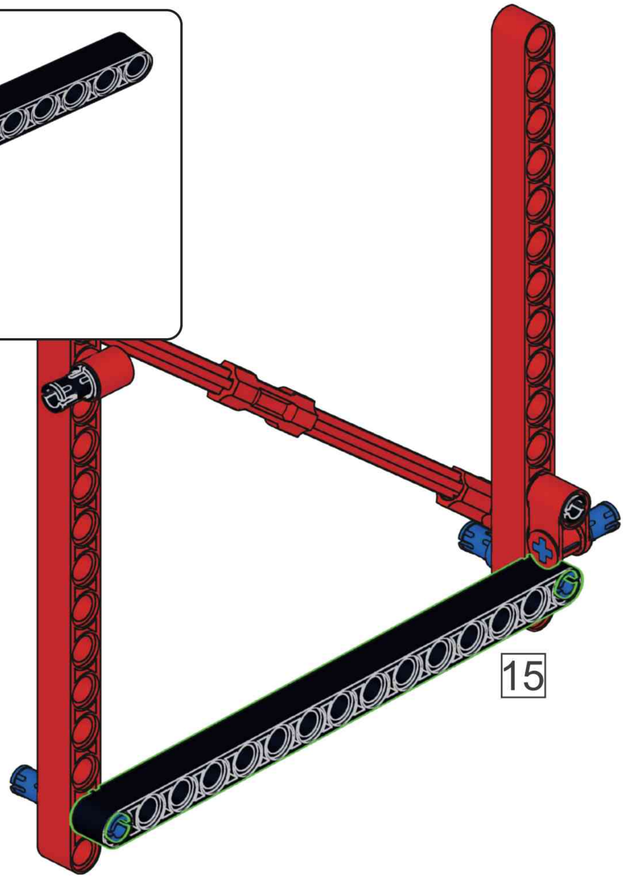

R47

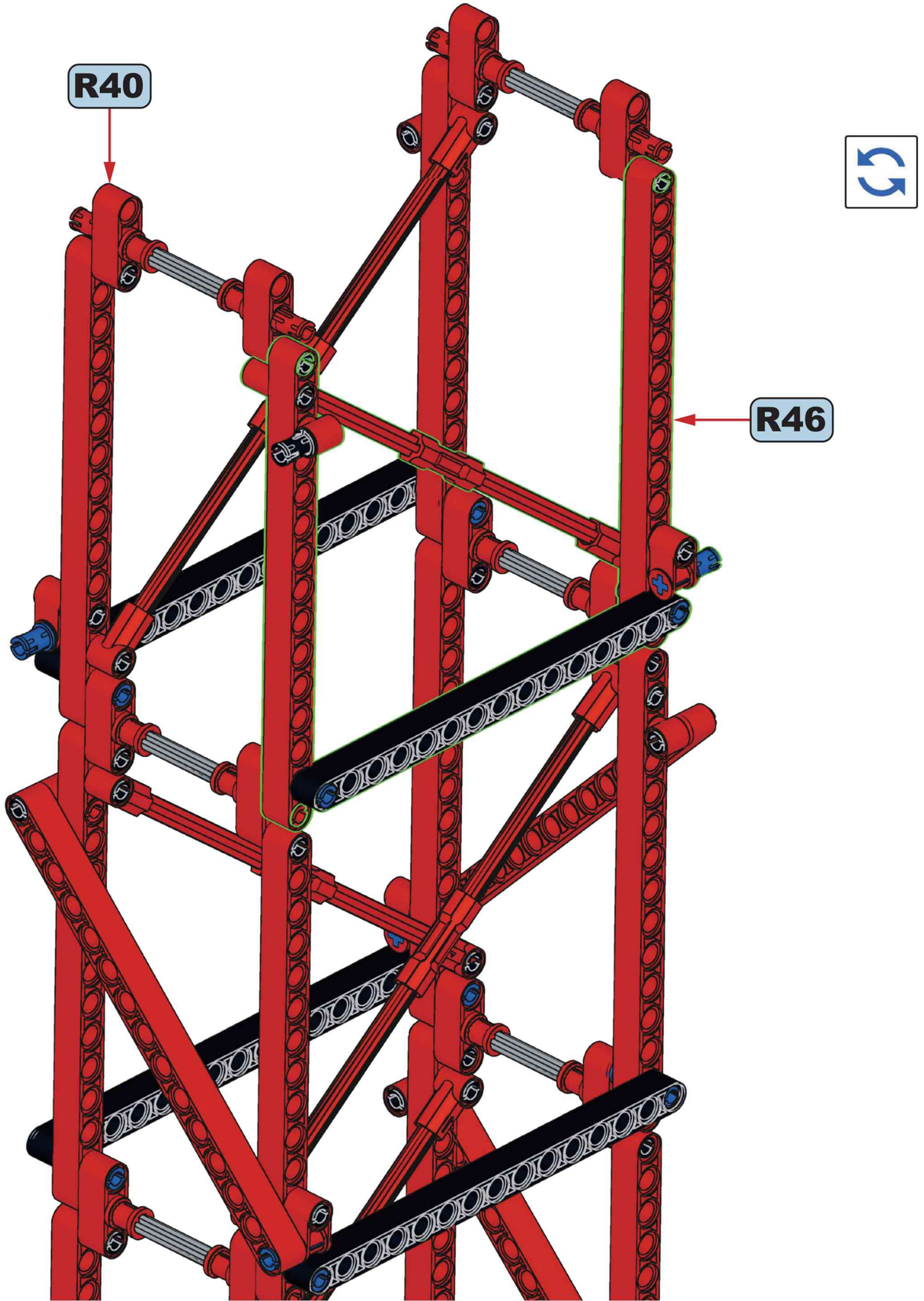

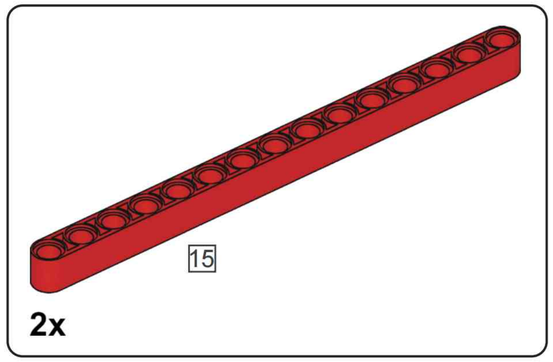

R48

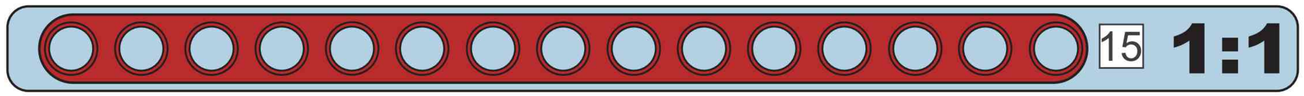

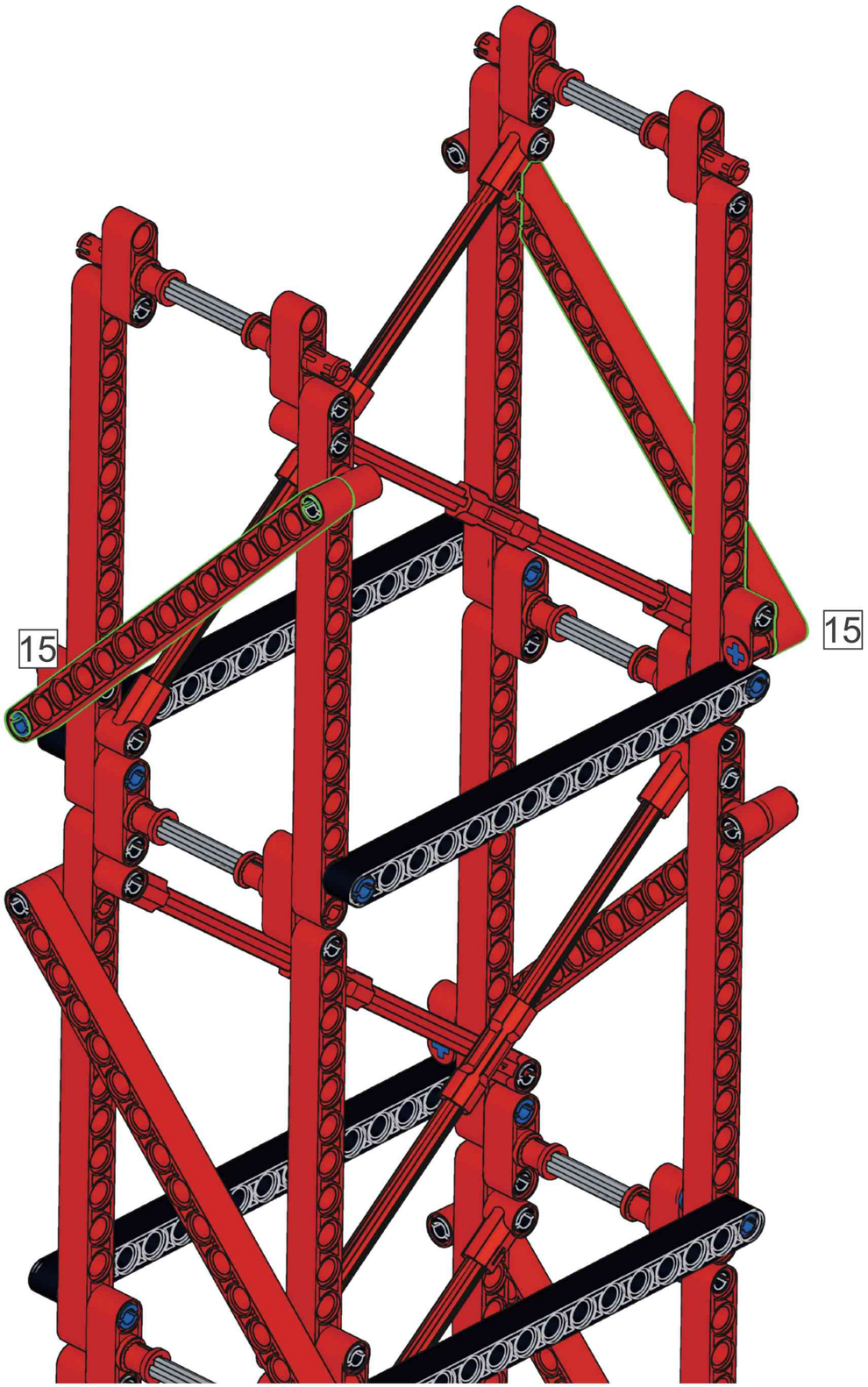

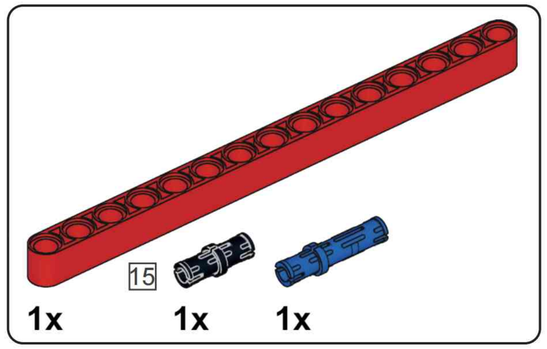

R49

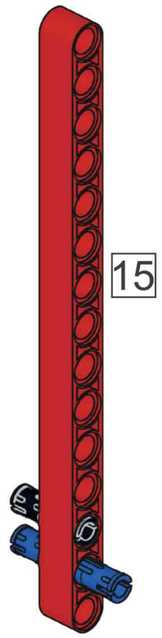

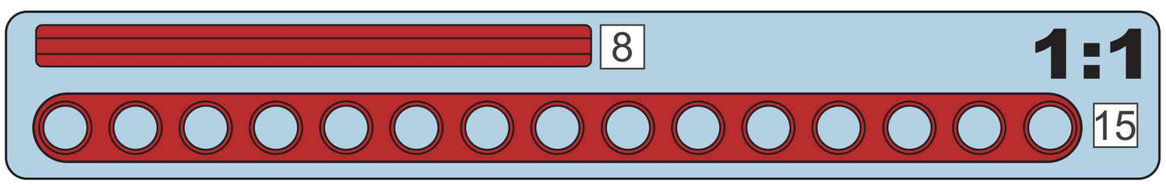

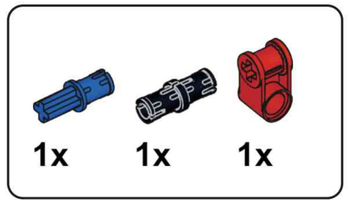

R50

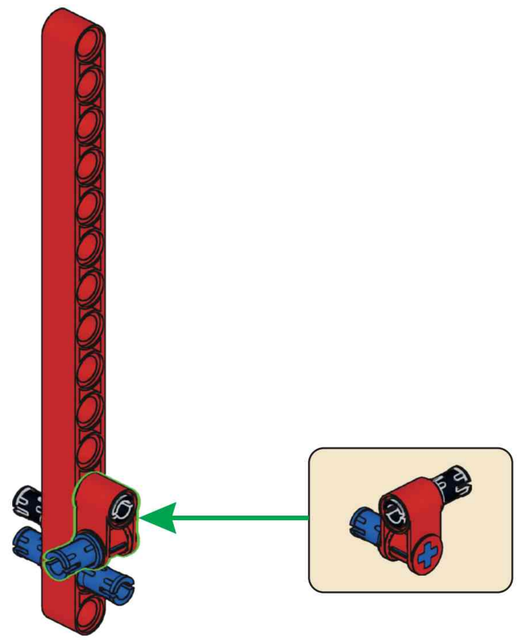

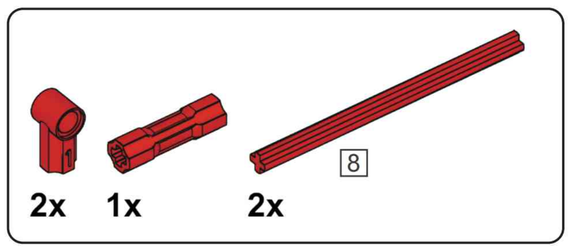

R51

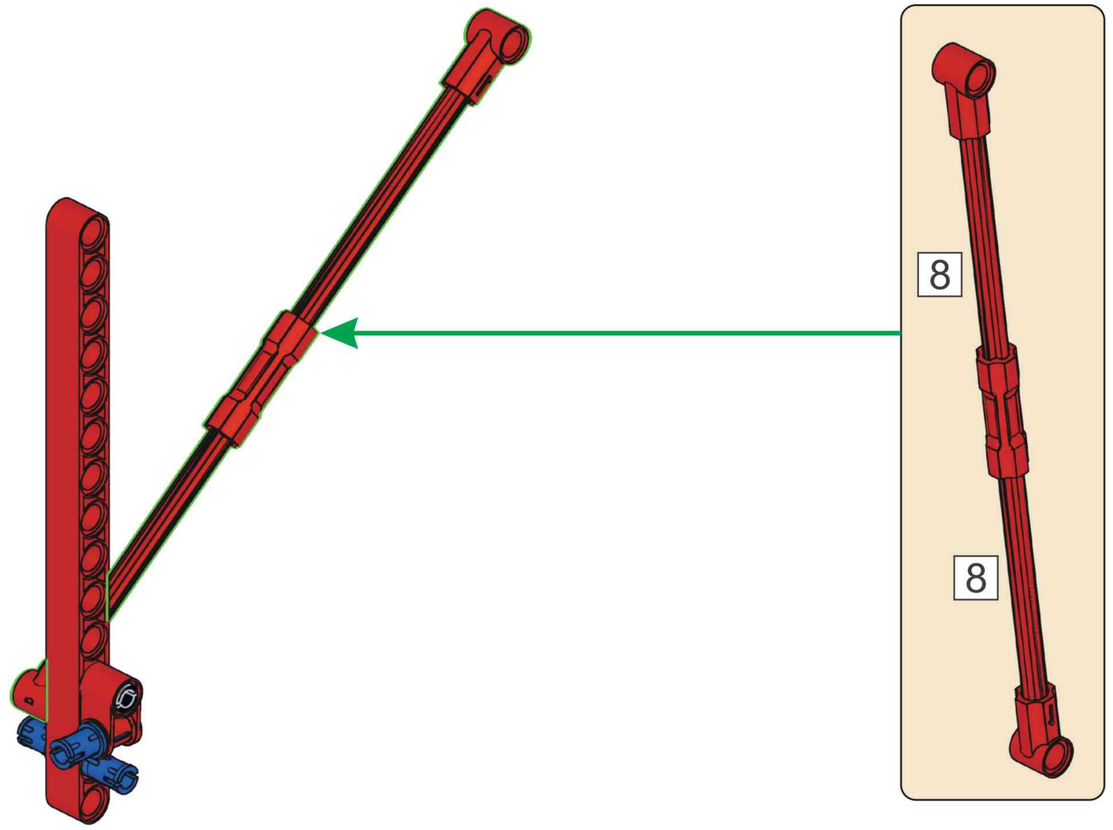

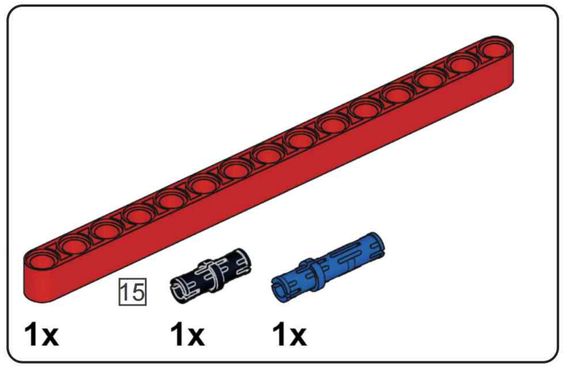

R52

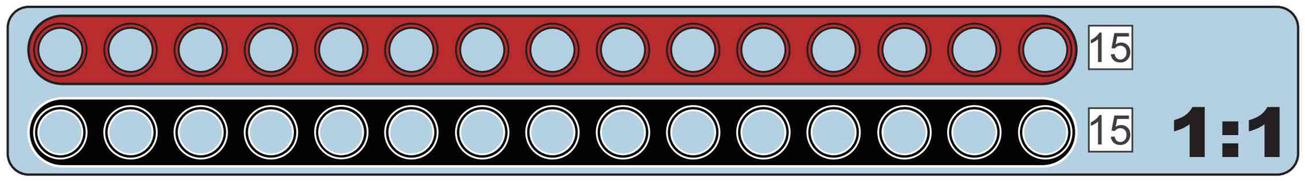

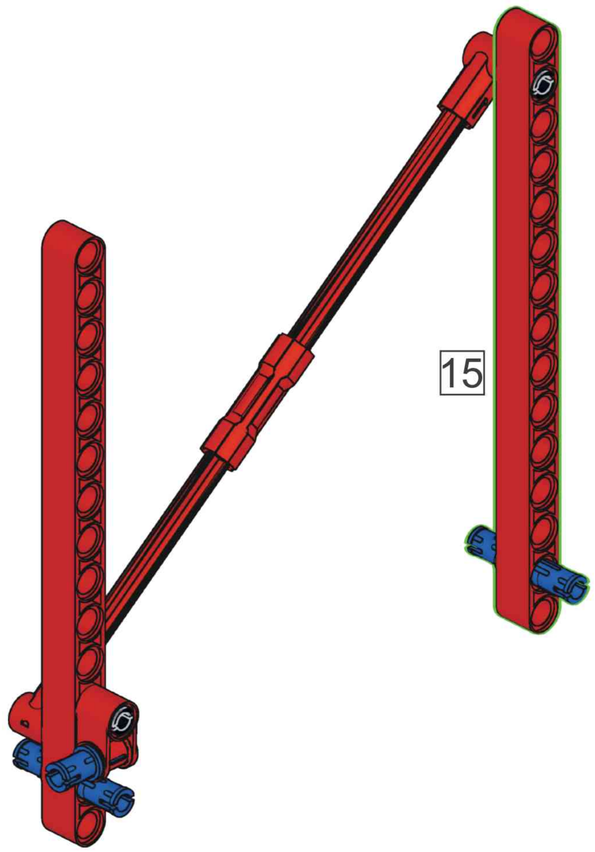

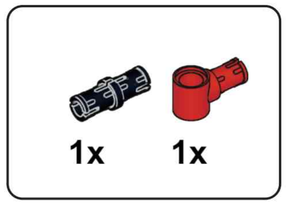

R53

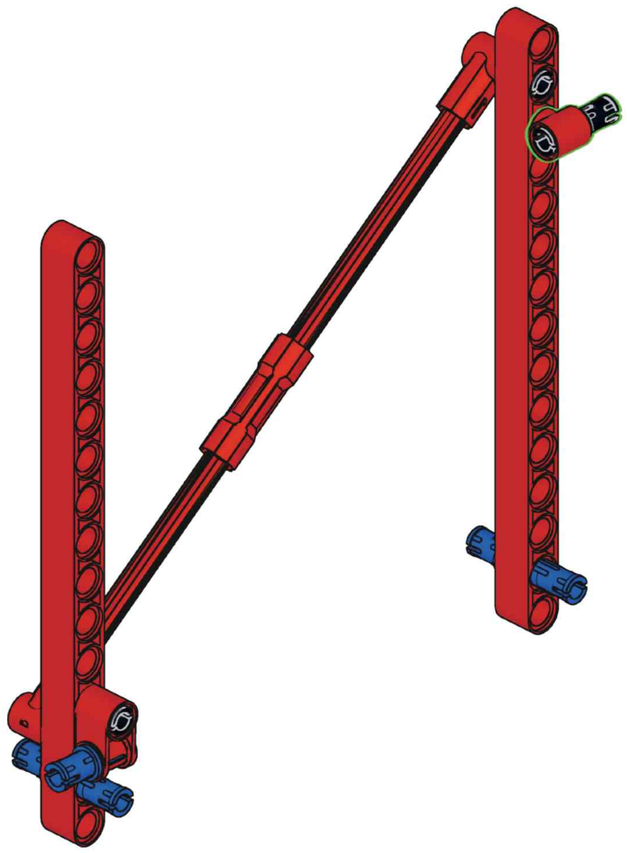

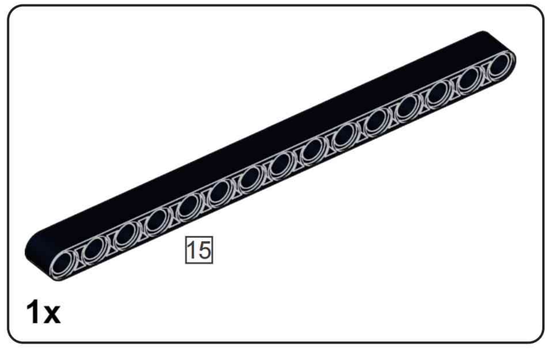

R54

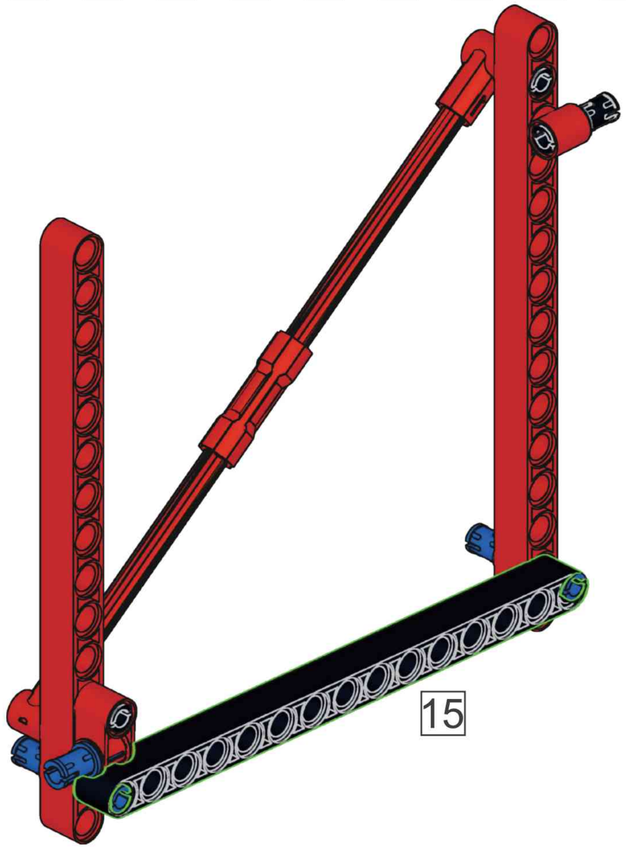

R55

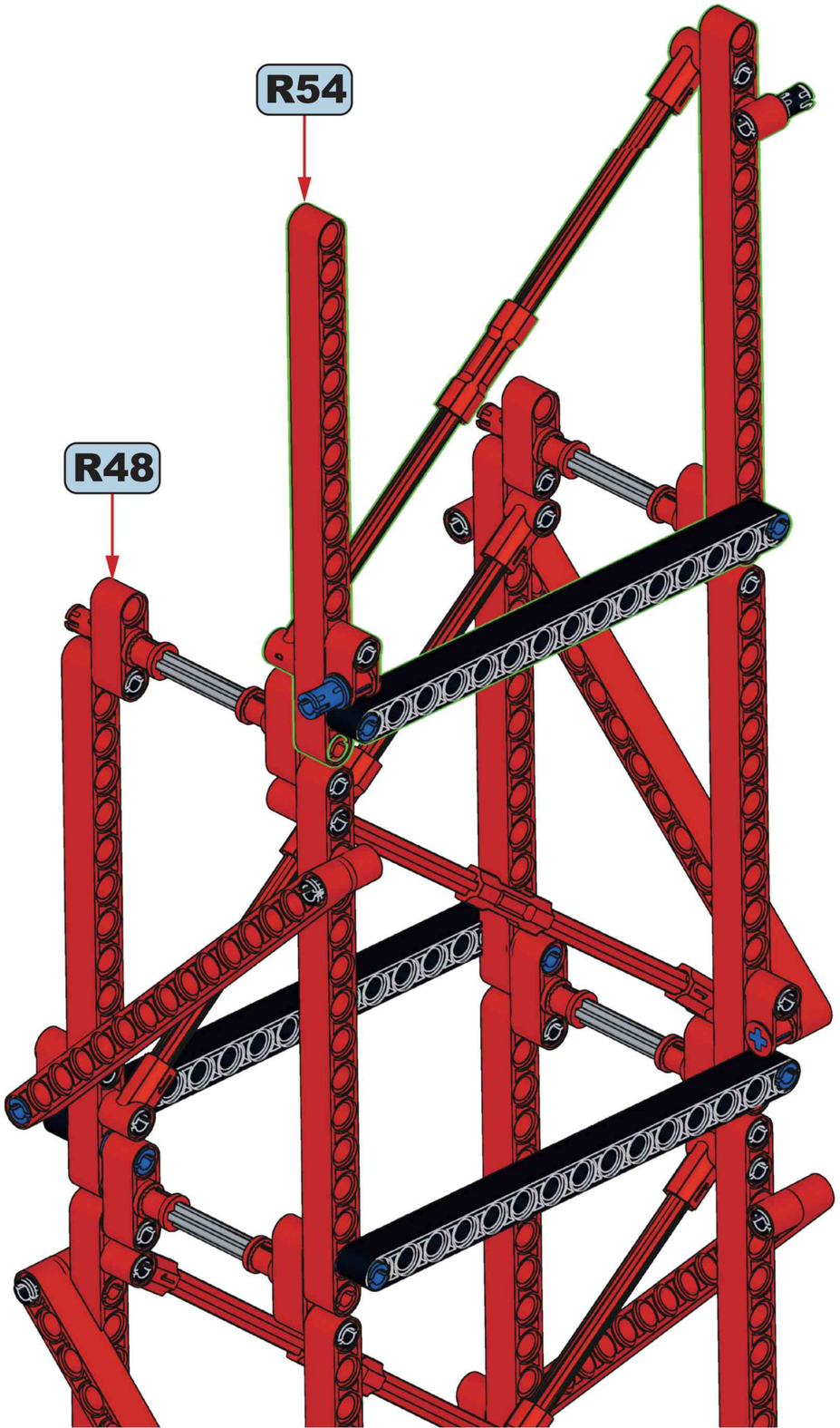

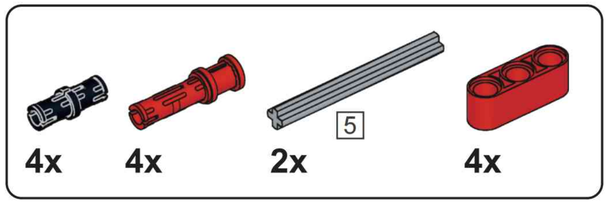

R56

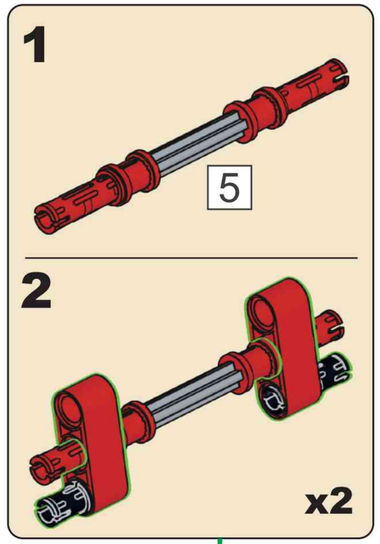

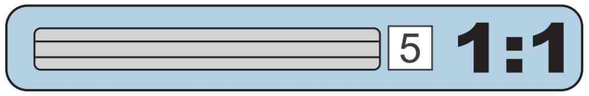

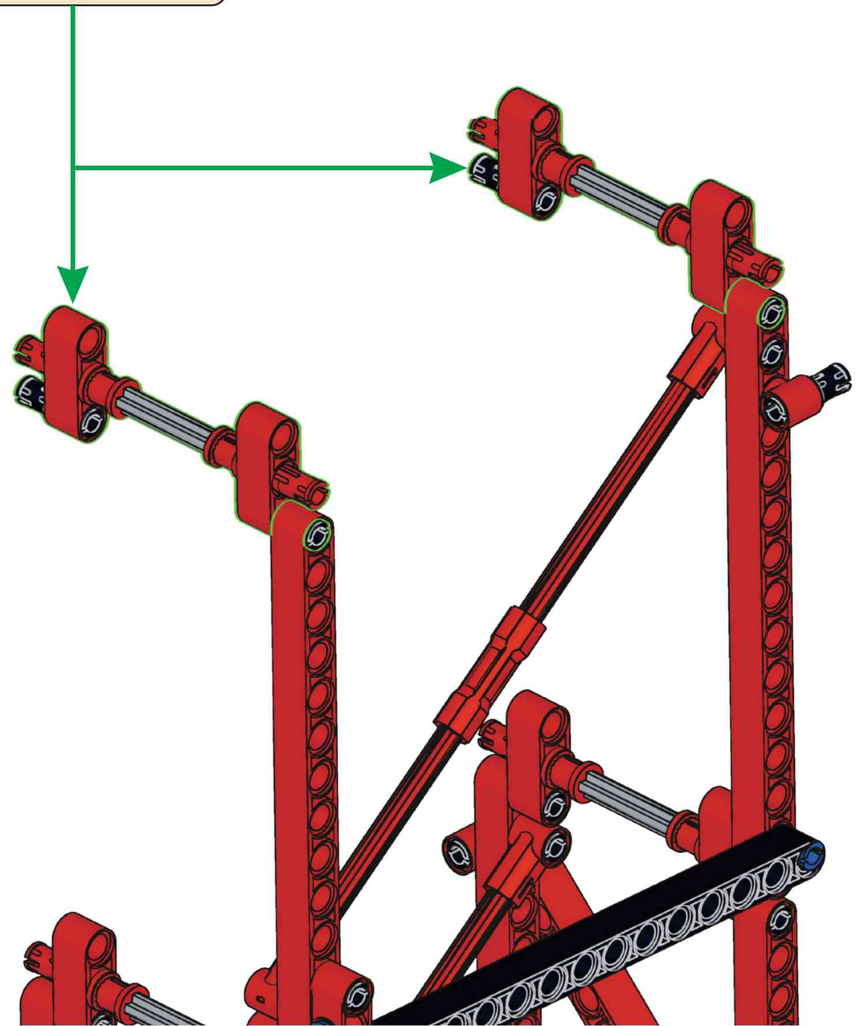

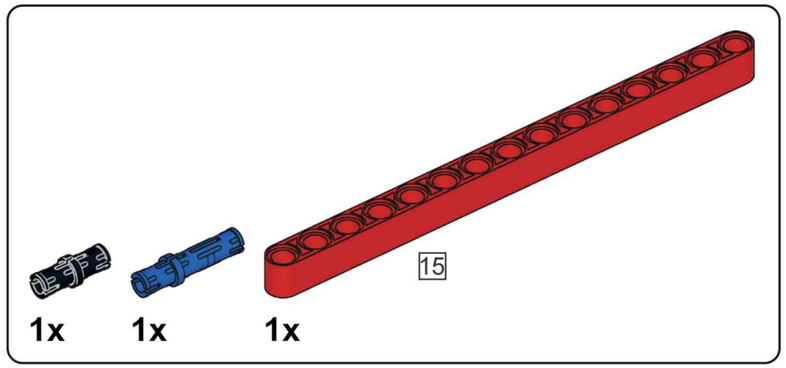

R57

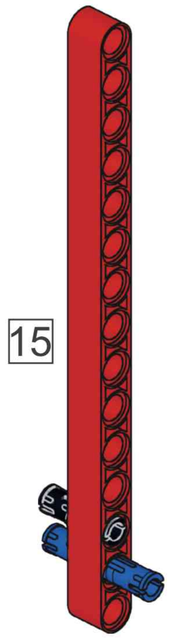

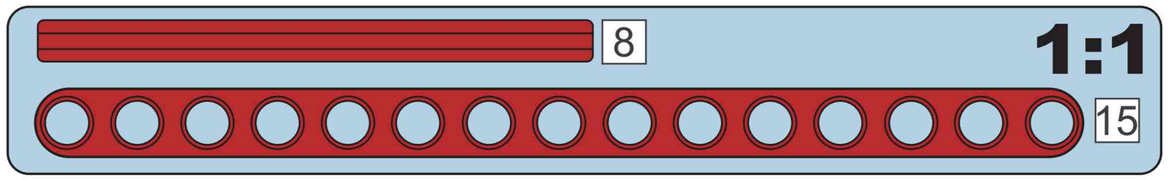

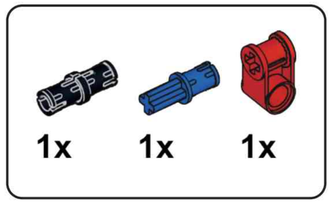

R58

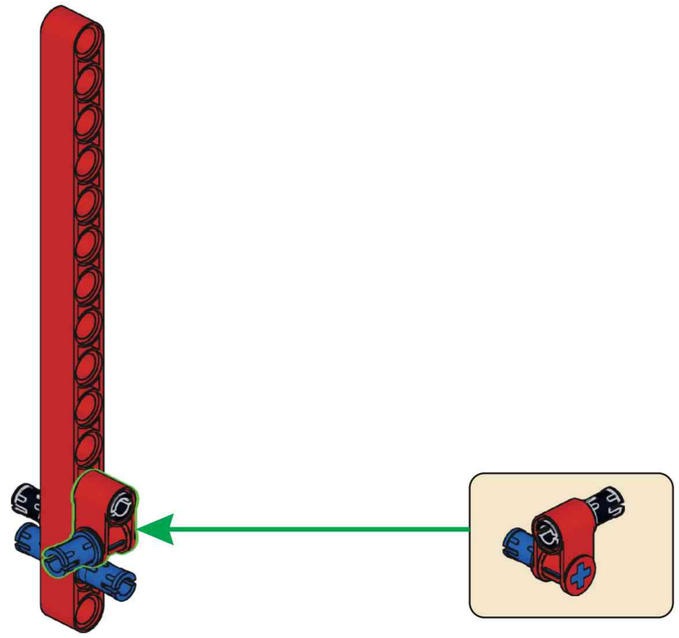

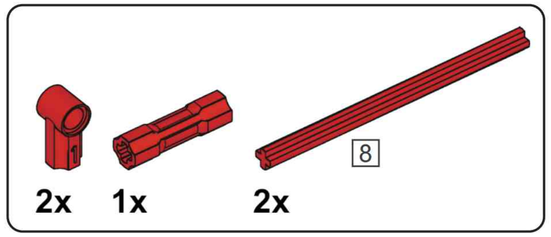

R59

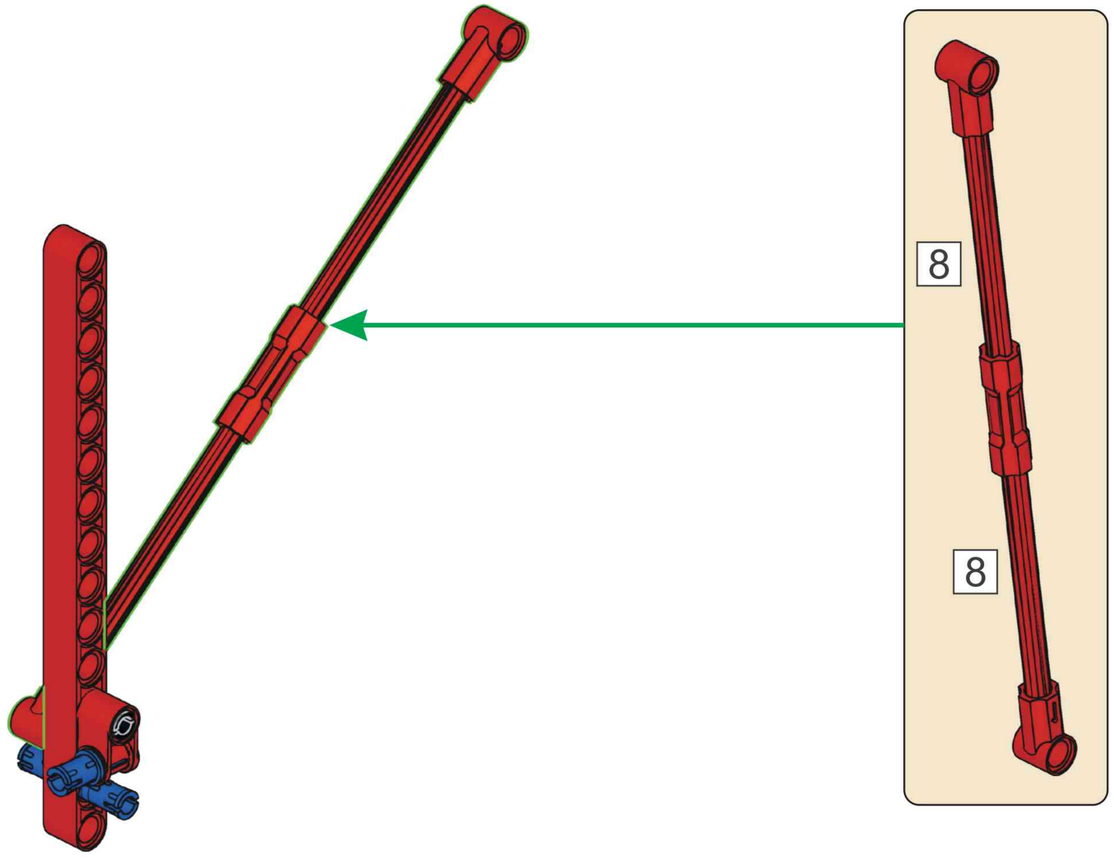

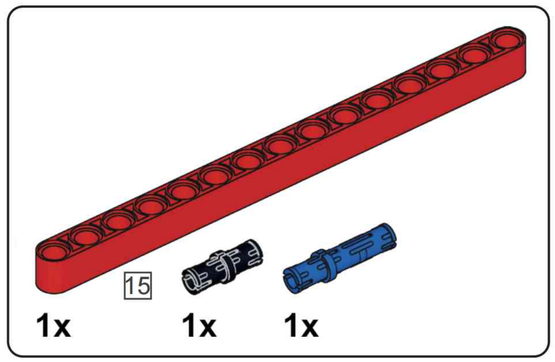

R60

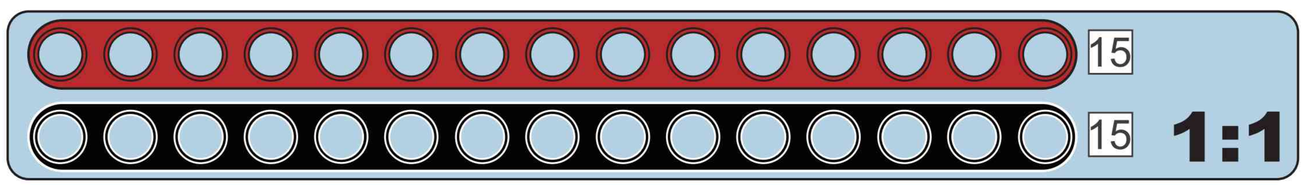

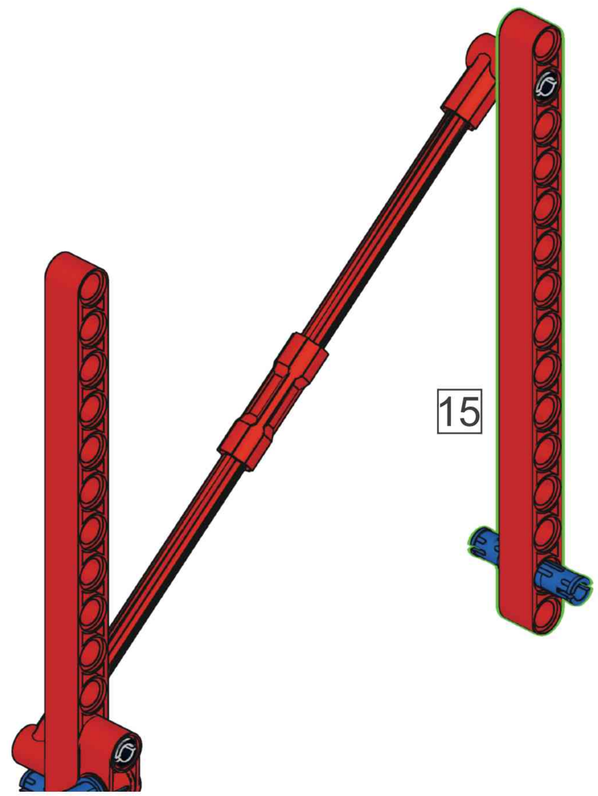

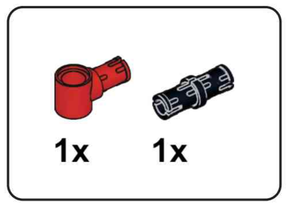

R61

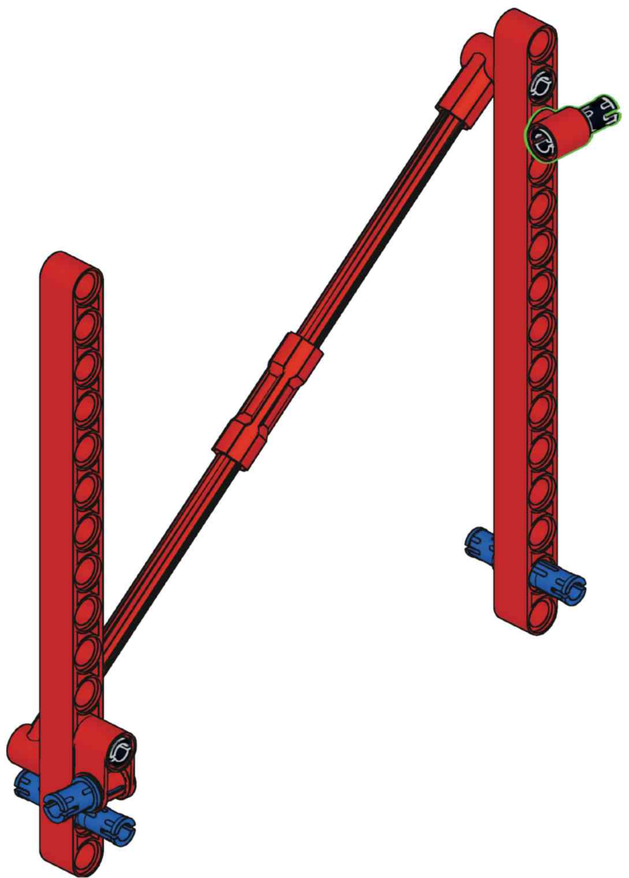

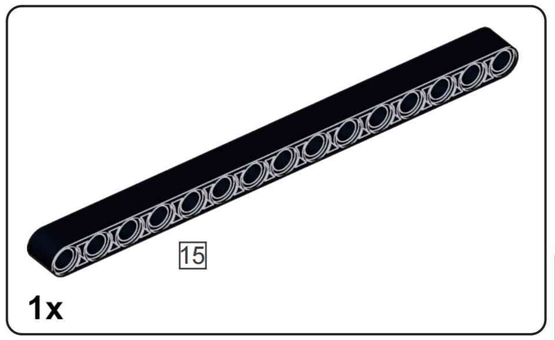

R62

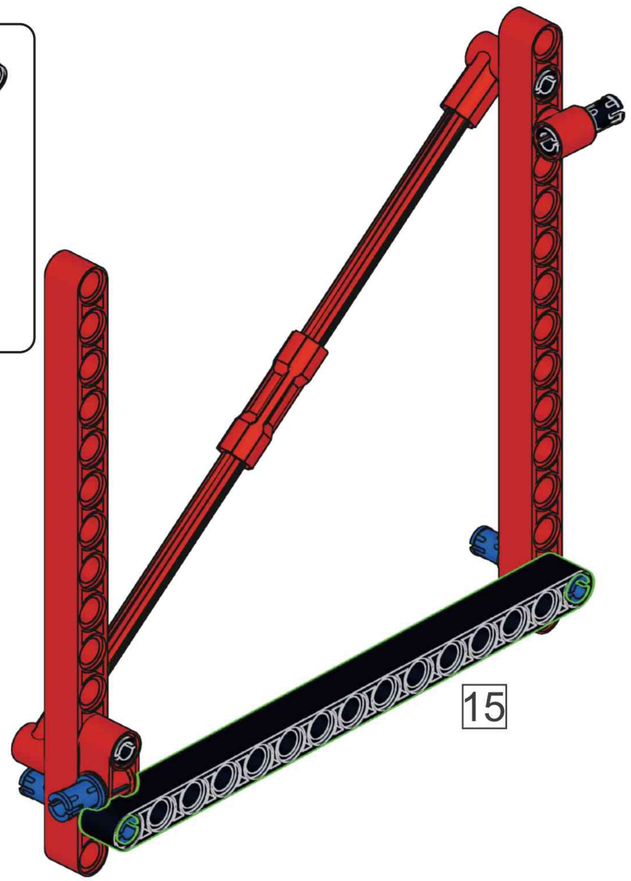

R63



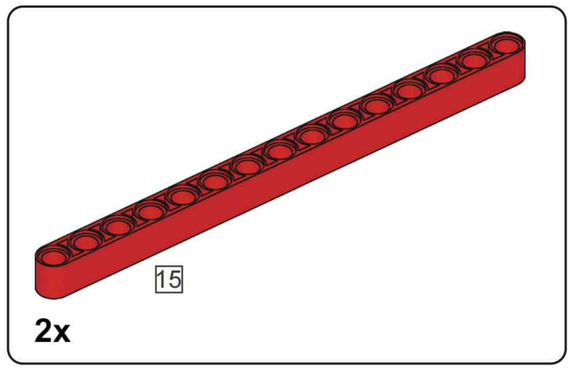

R64

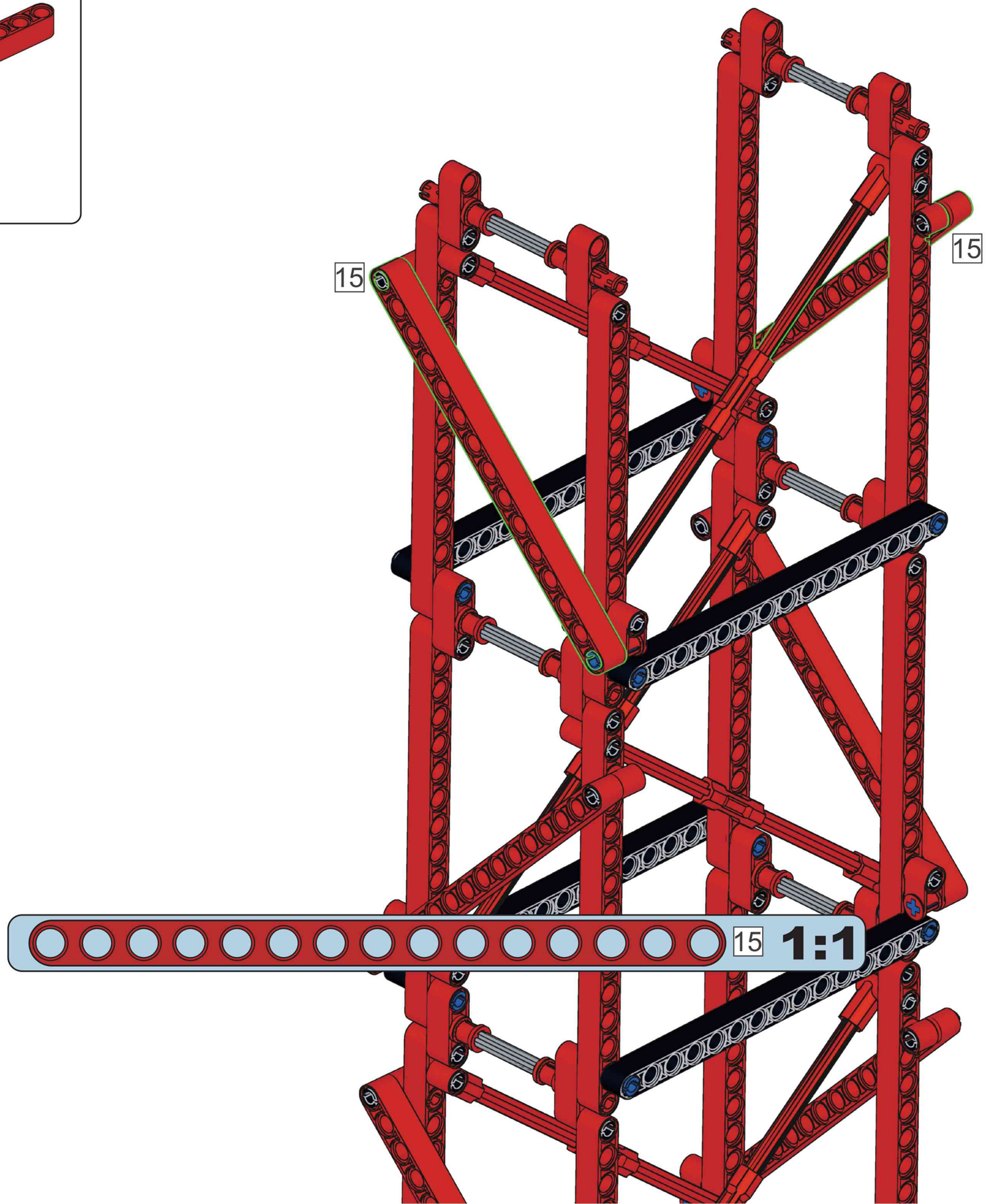

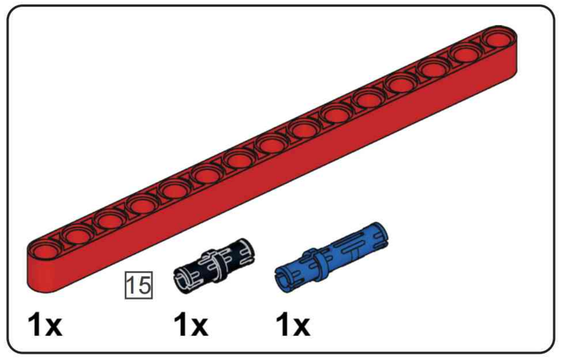

R65

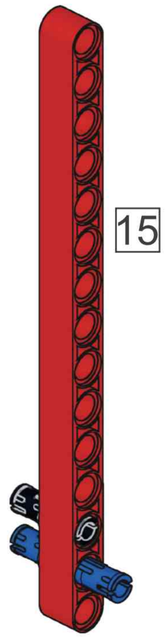

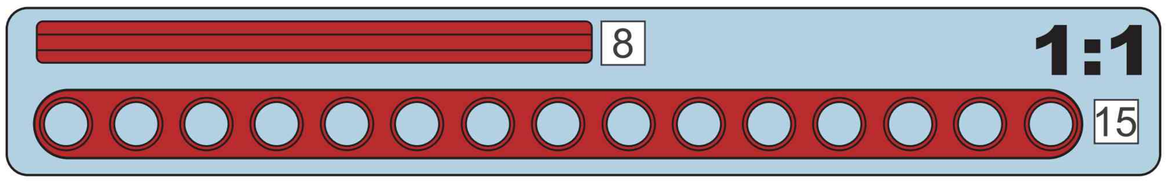

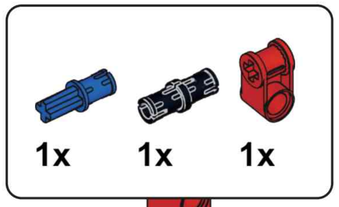

R66

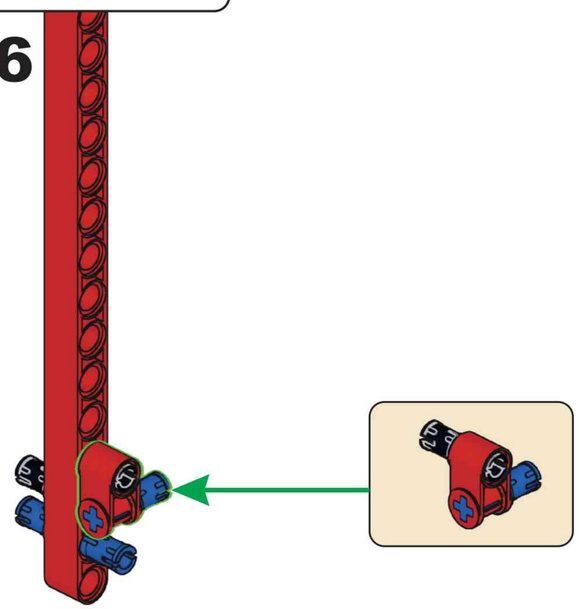

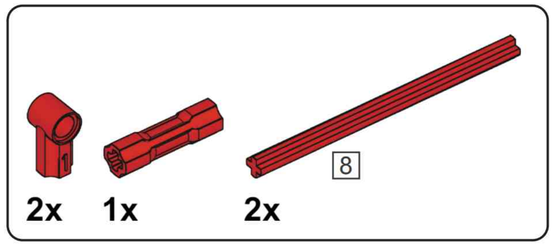

R67

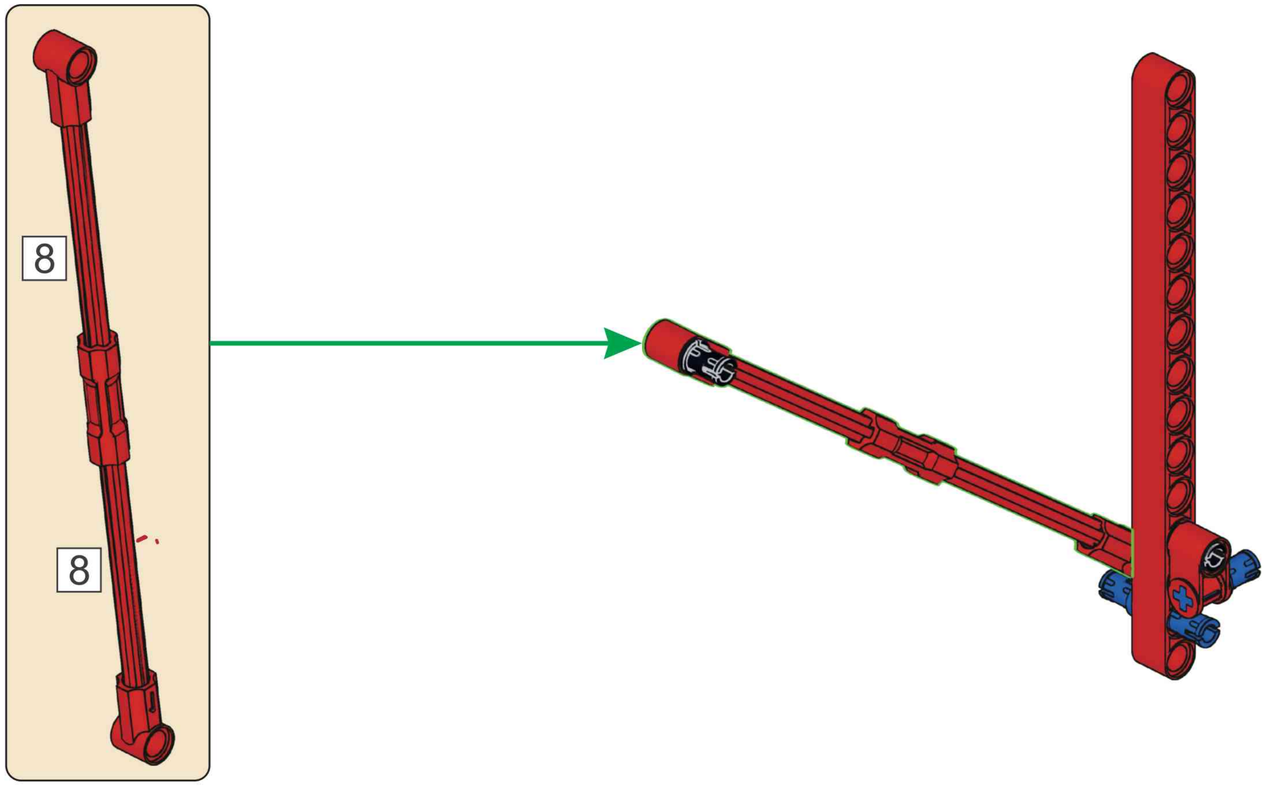

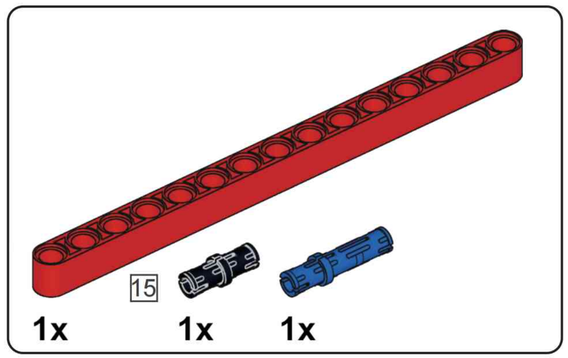

R68

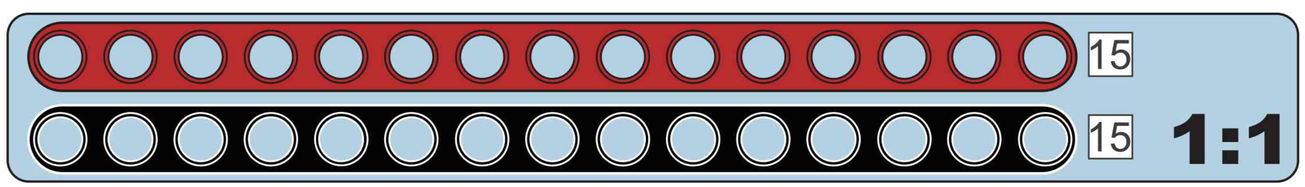

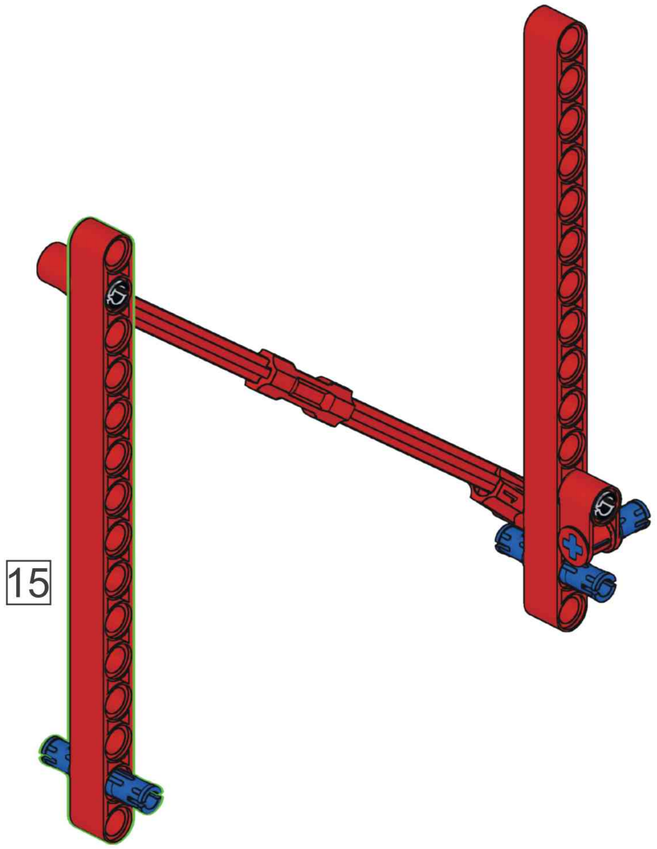

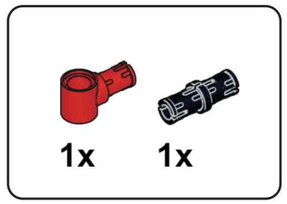

R69

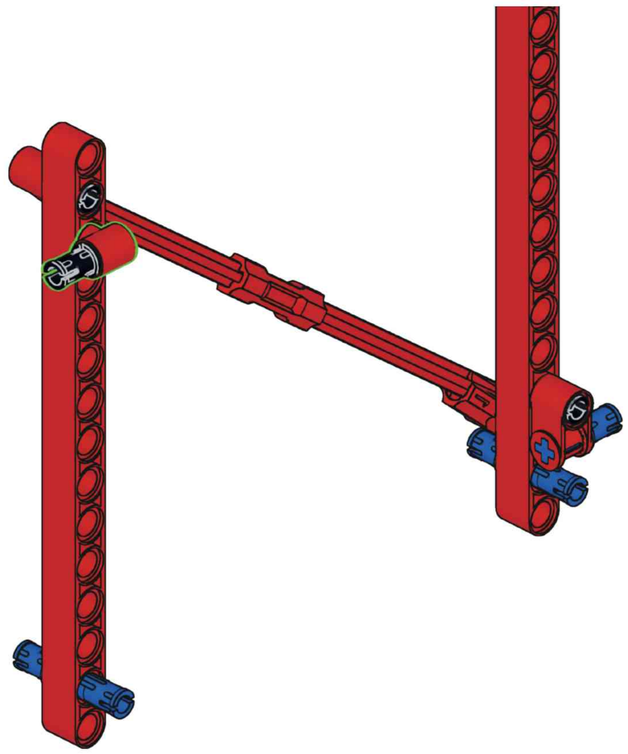

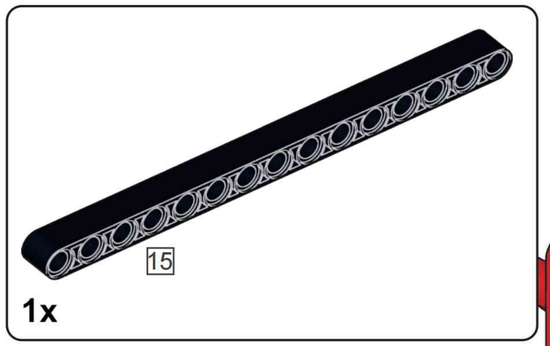

R70

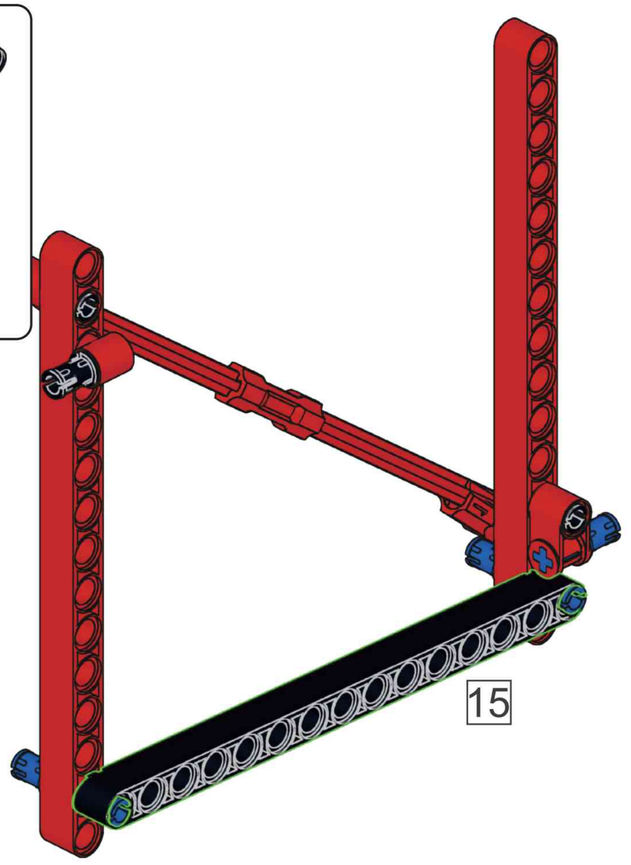

R71

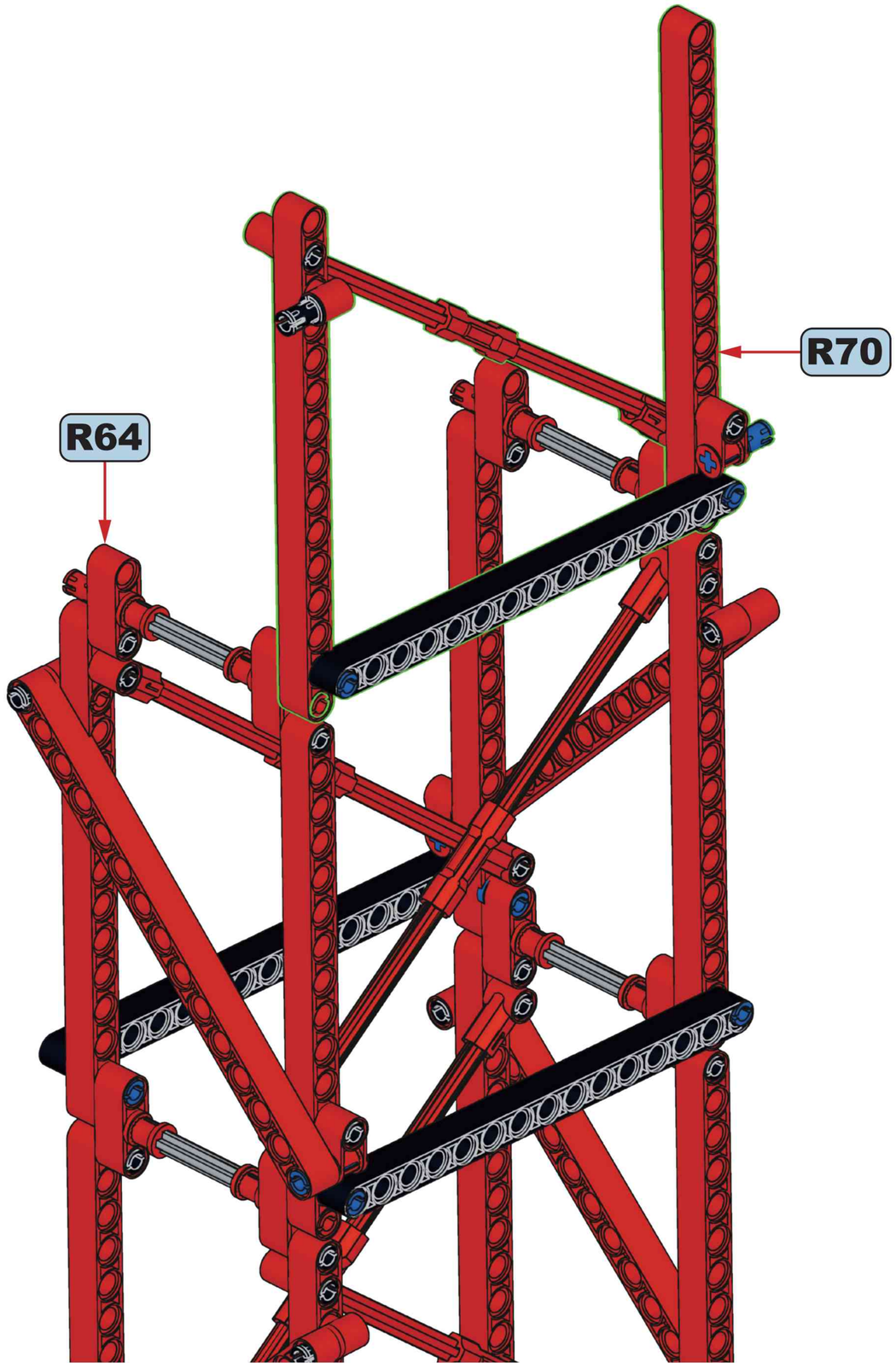

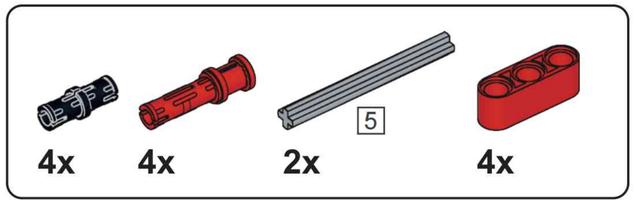

R72

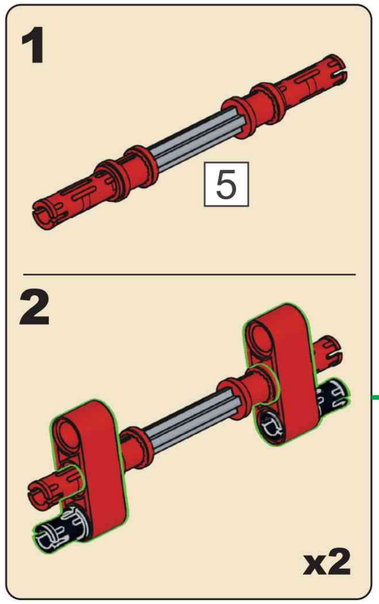

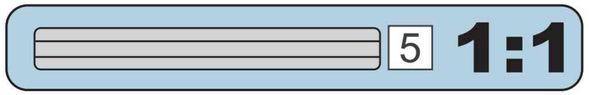

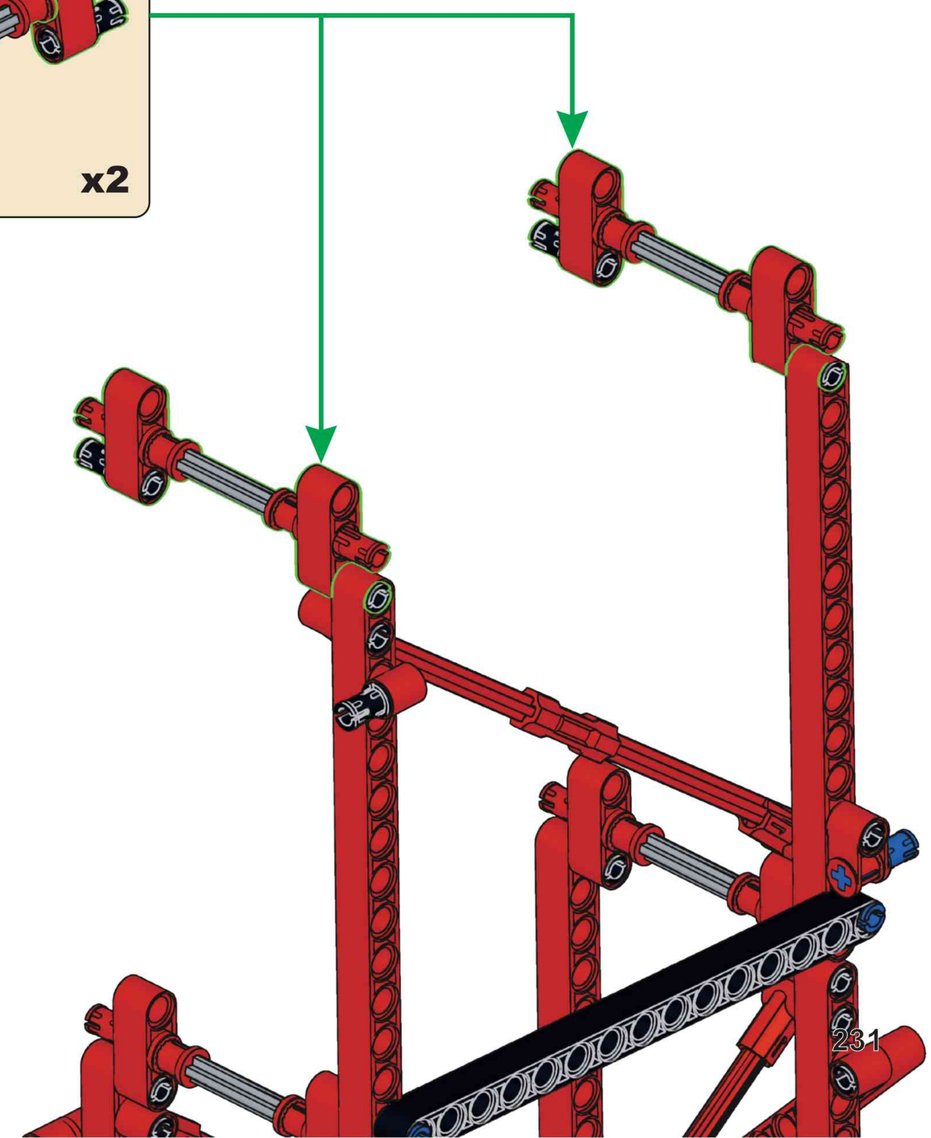

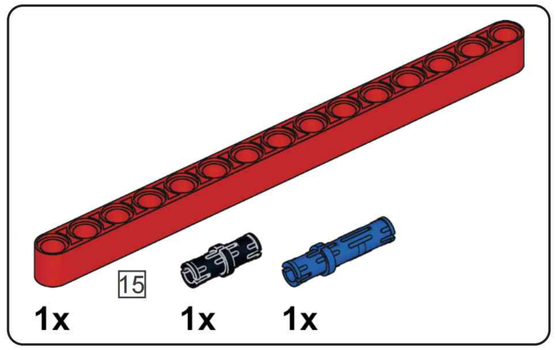

R73

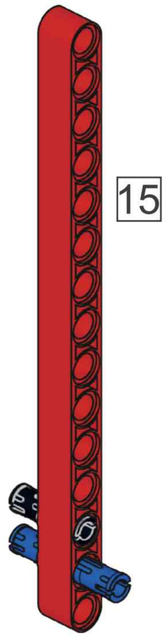

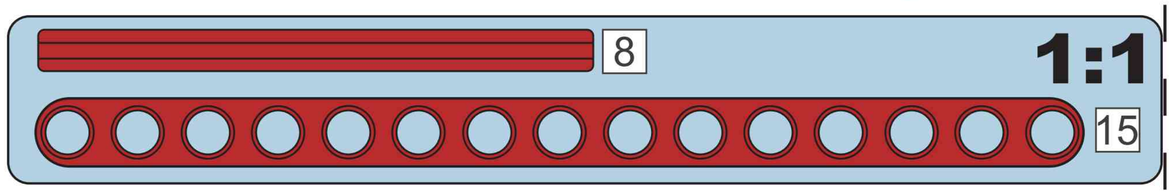

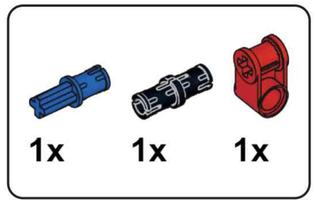

R74

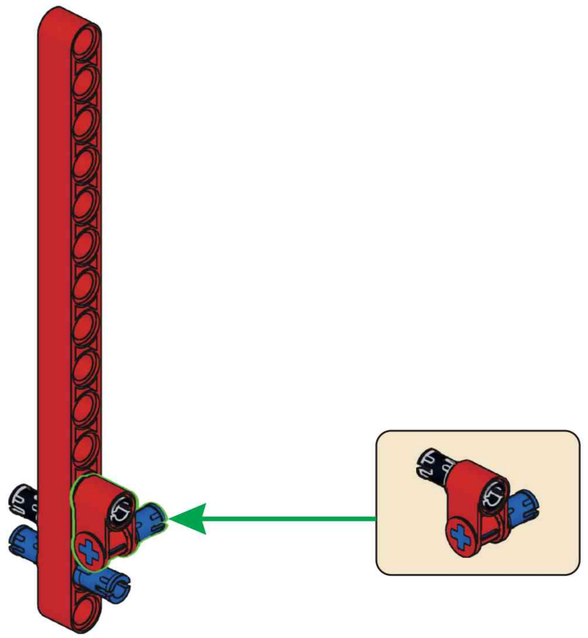

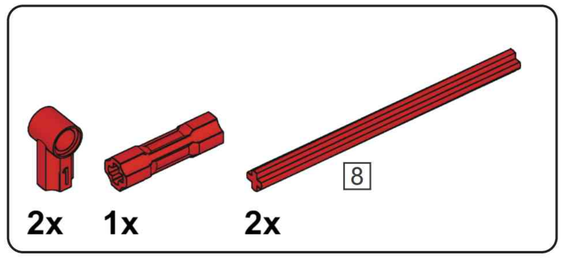

R75

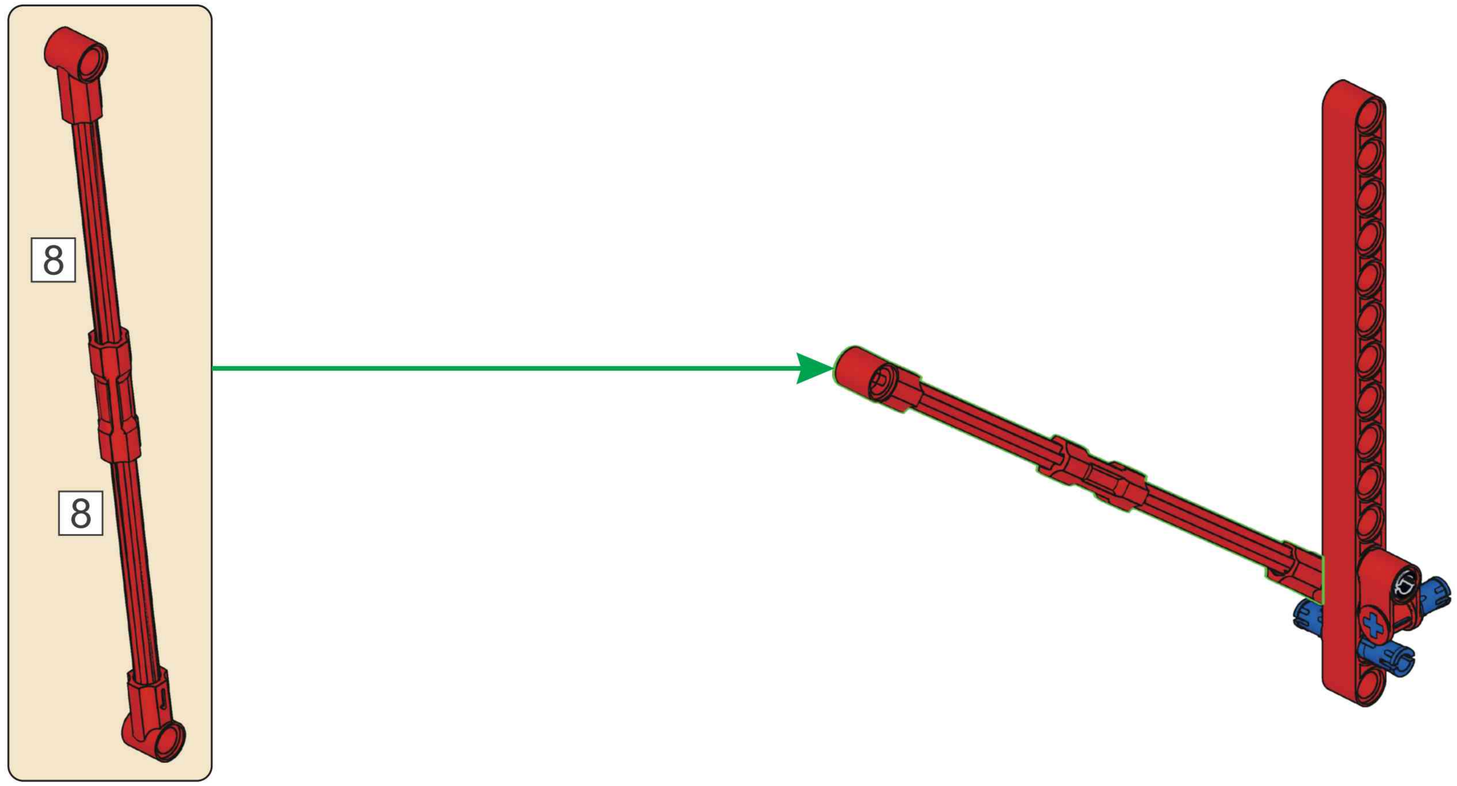

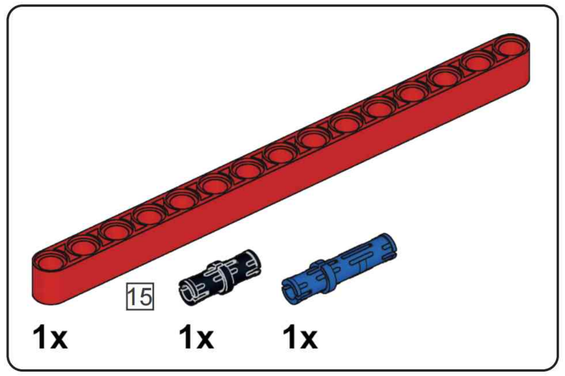

R76

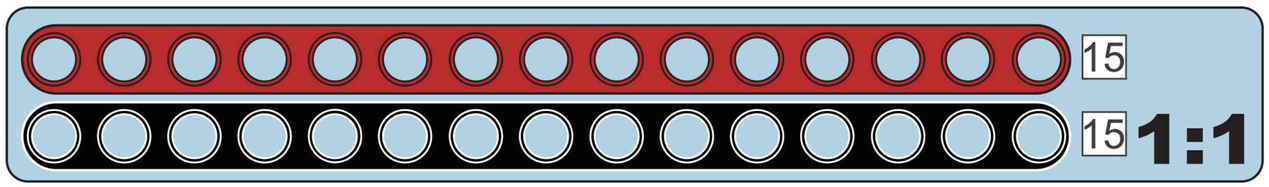

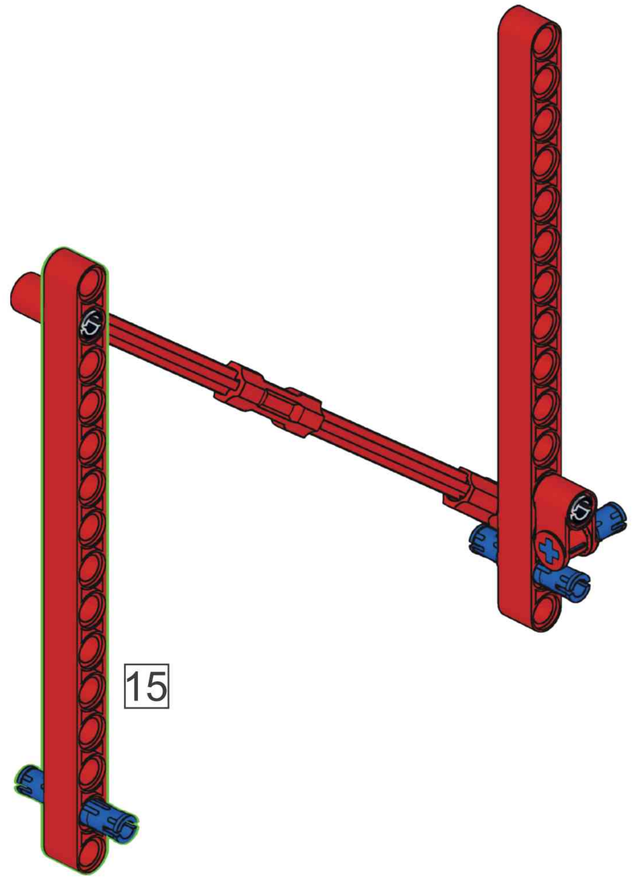

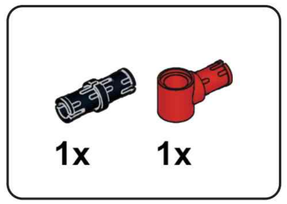

R77

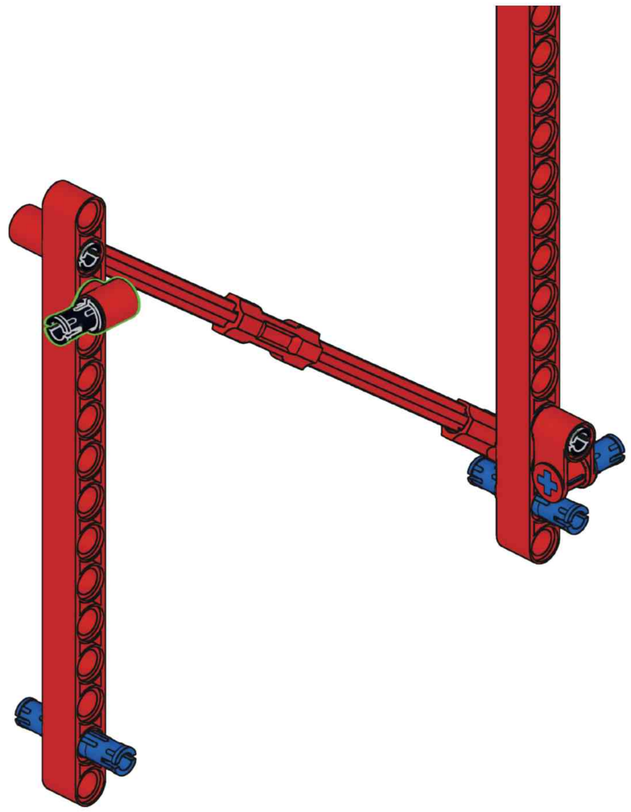

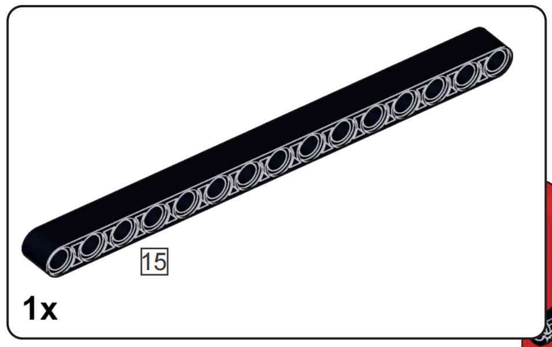

R78

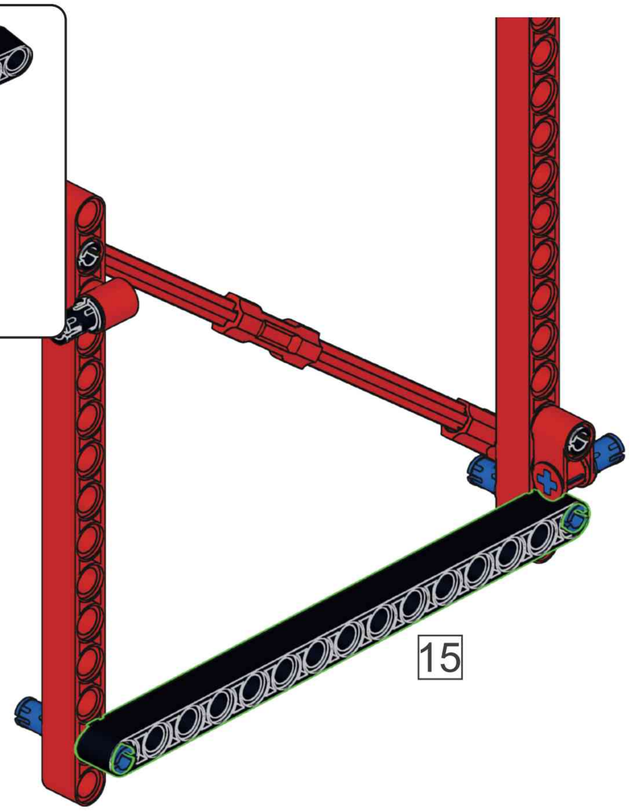

R79

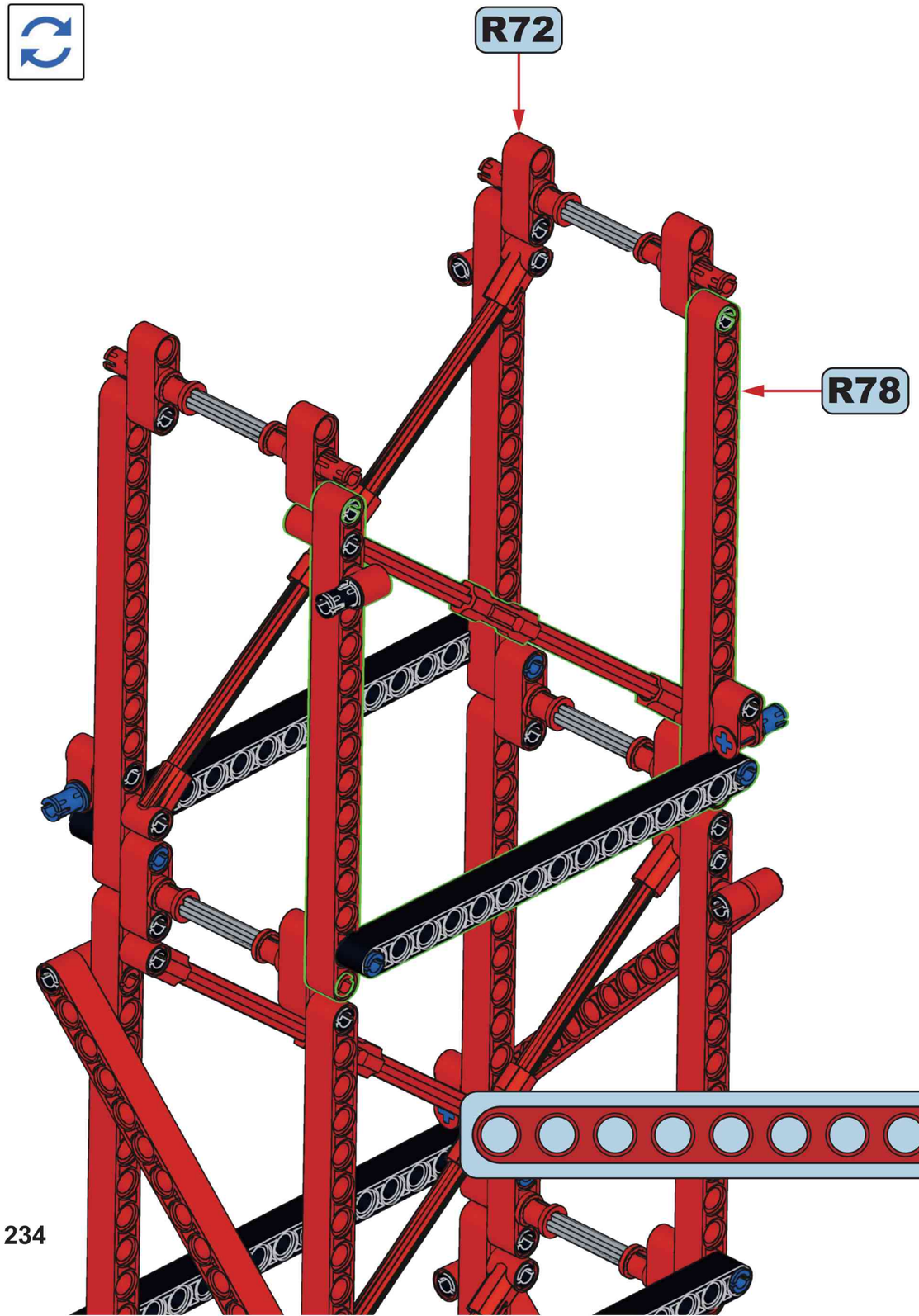

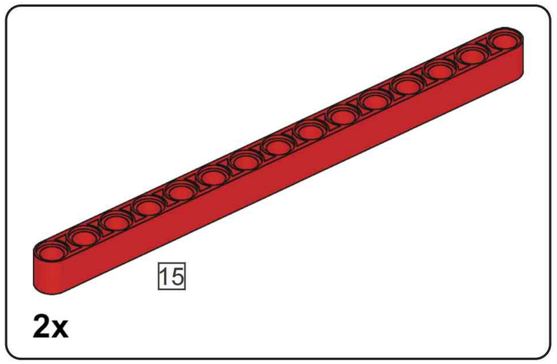

R80

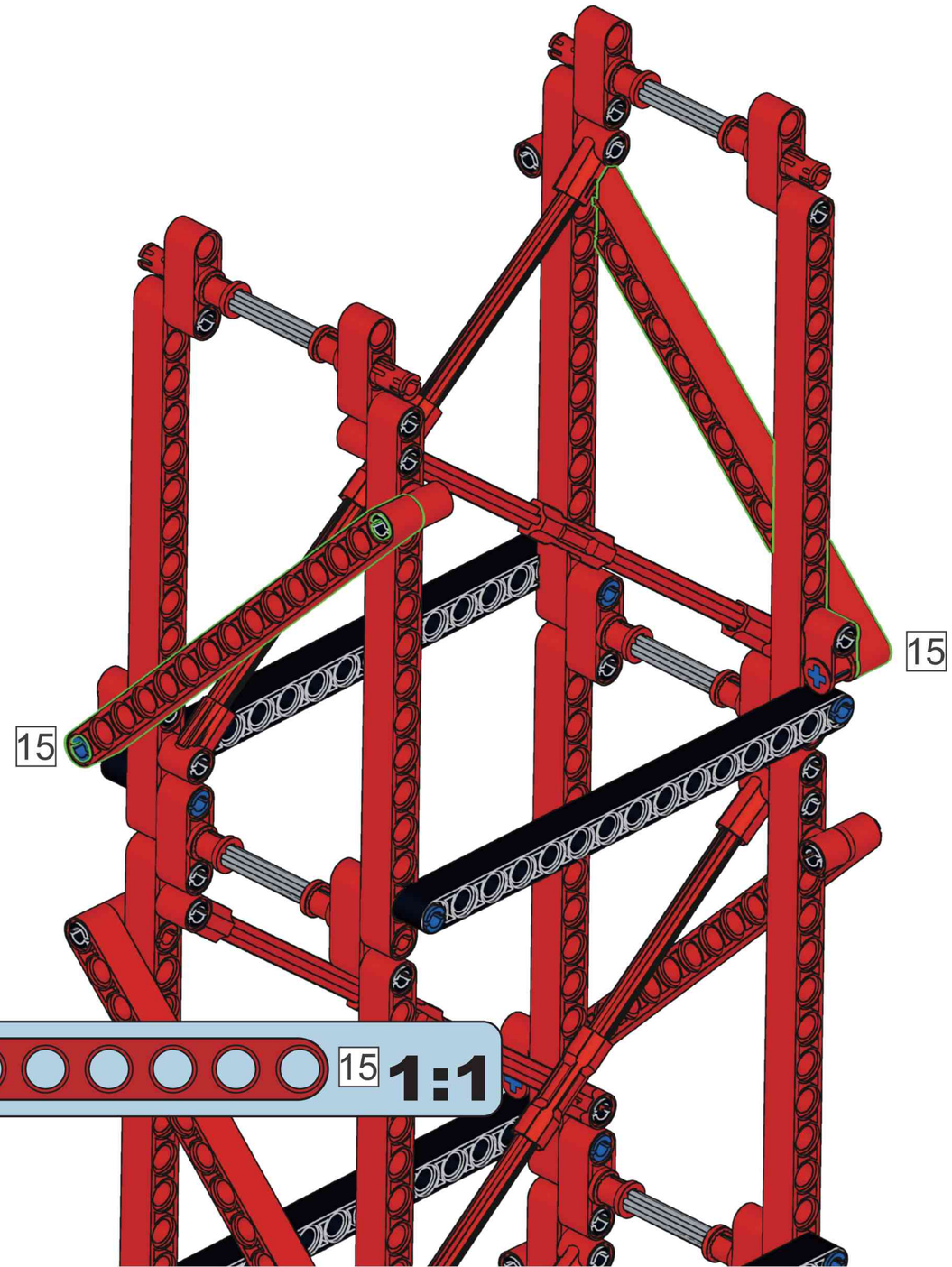

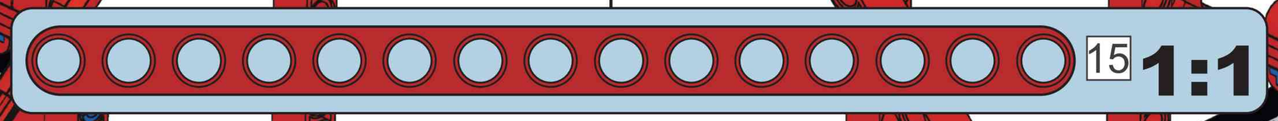

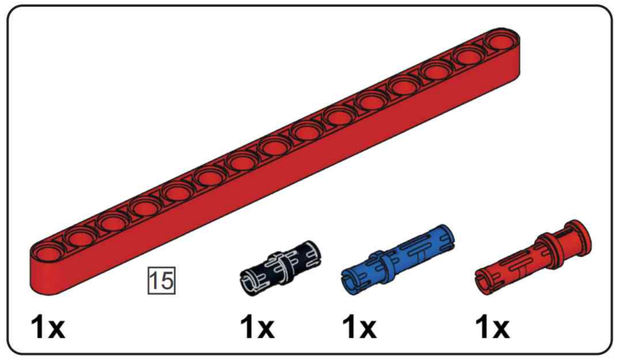

R81

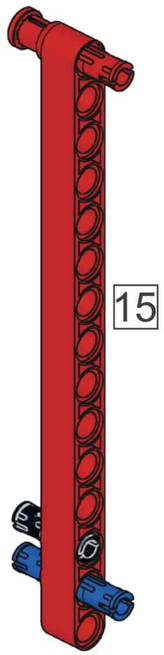

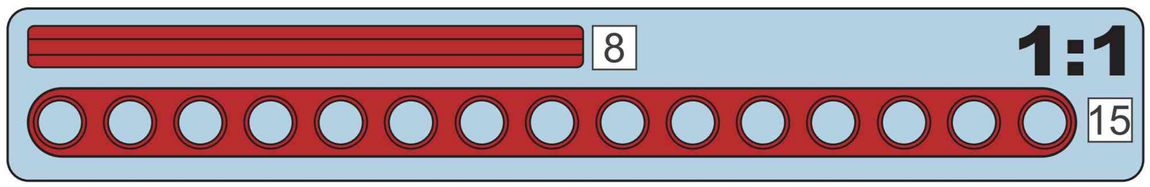

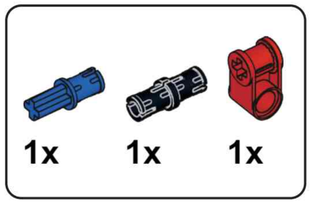

R82

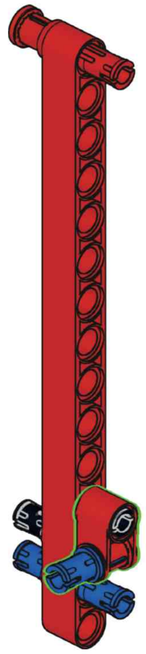

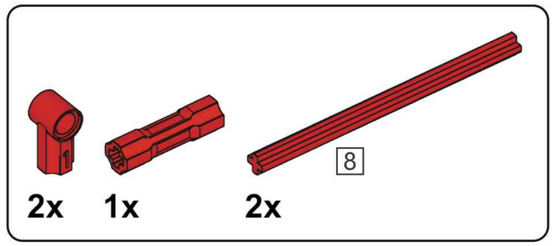

R83

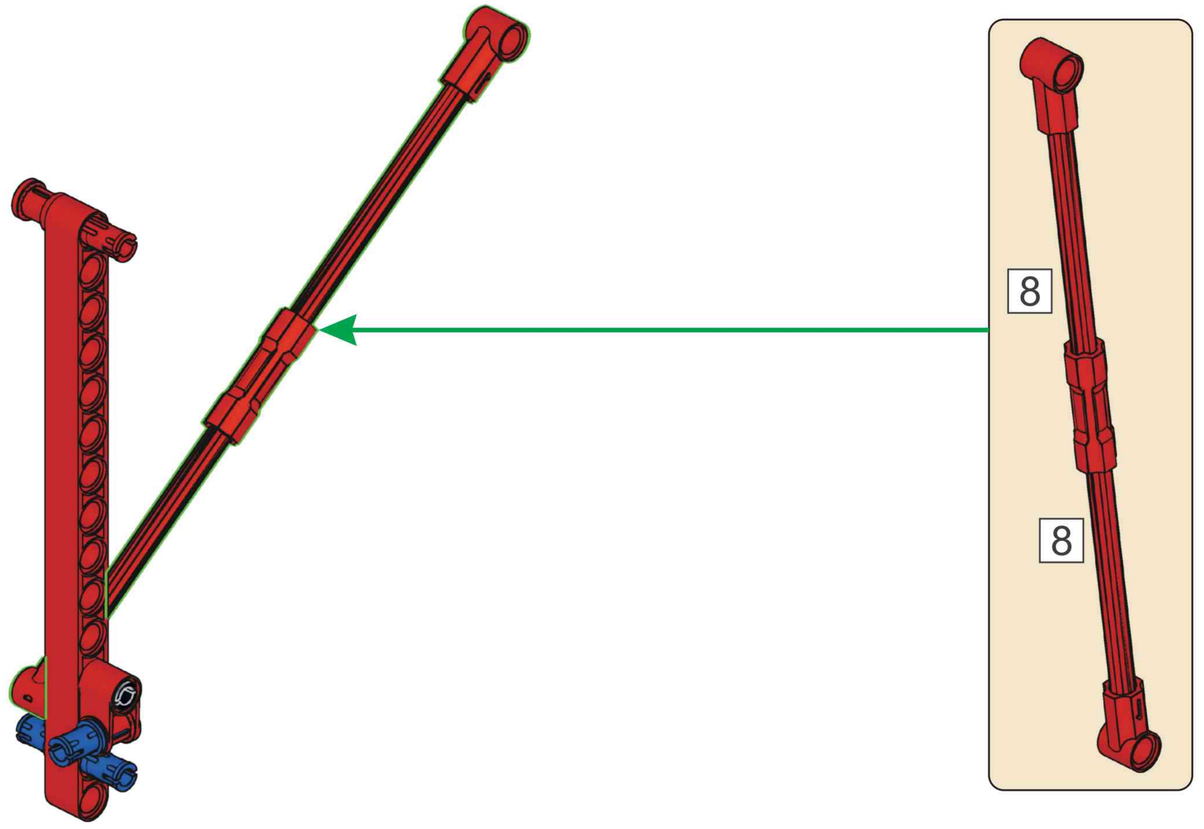

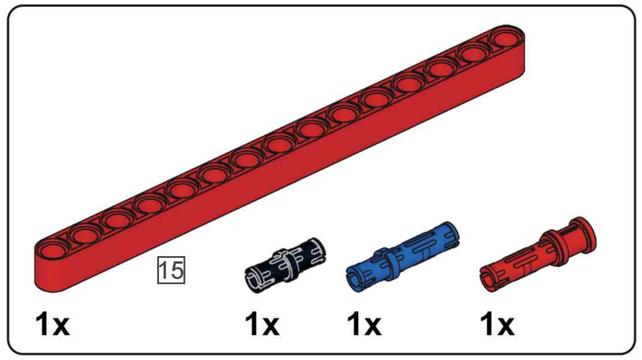

R84

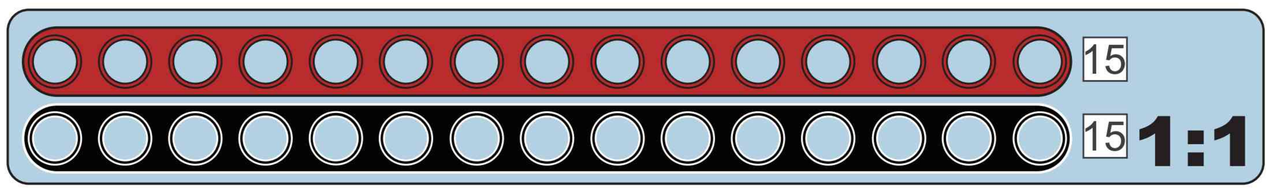

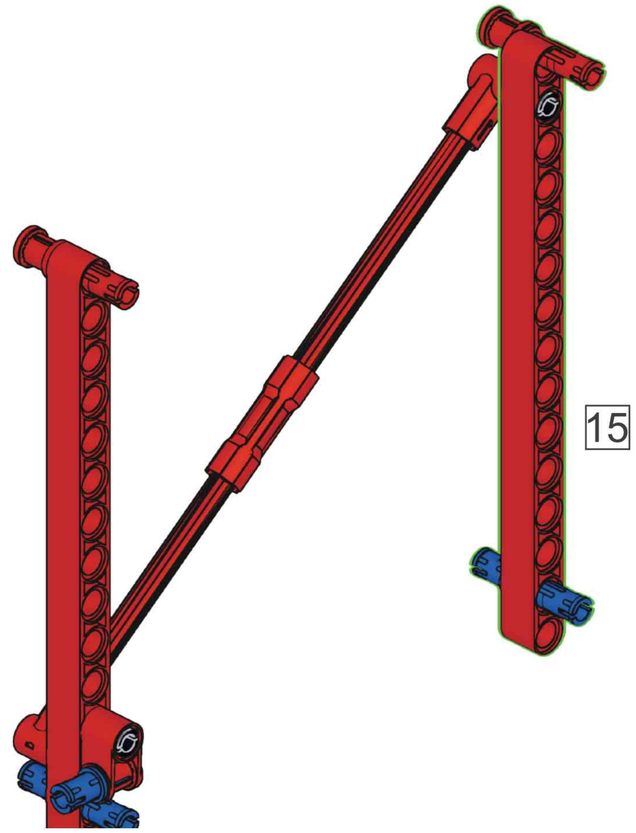

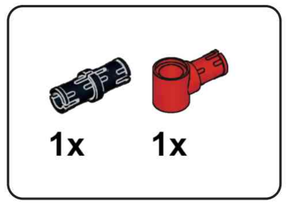

R85

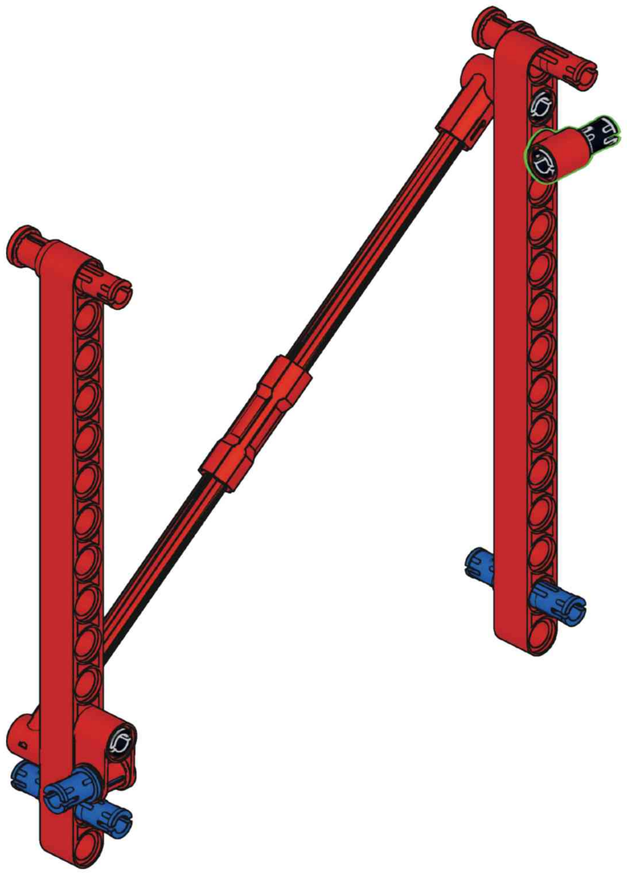

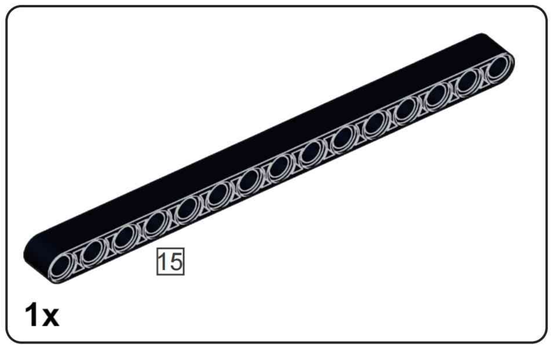

R86

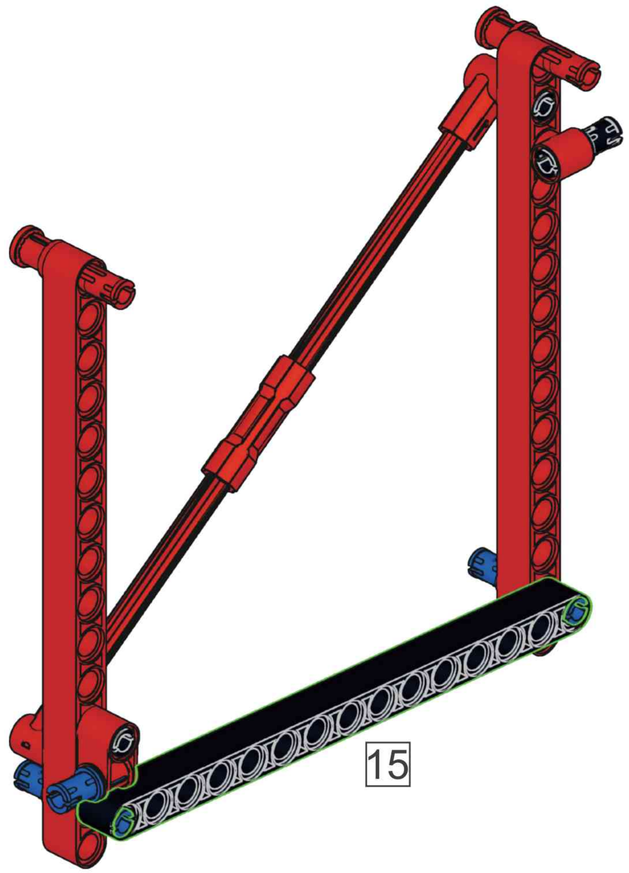

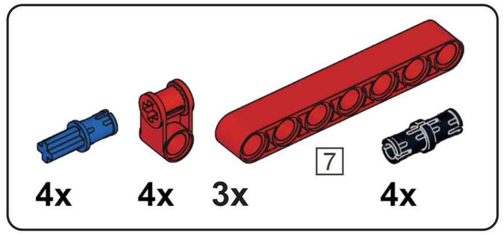

R87

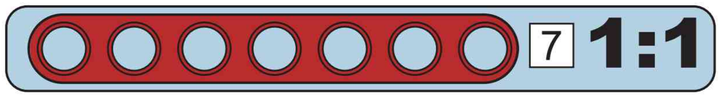

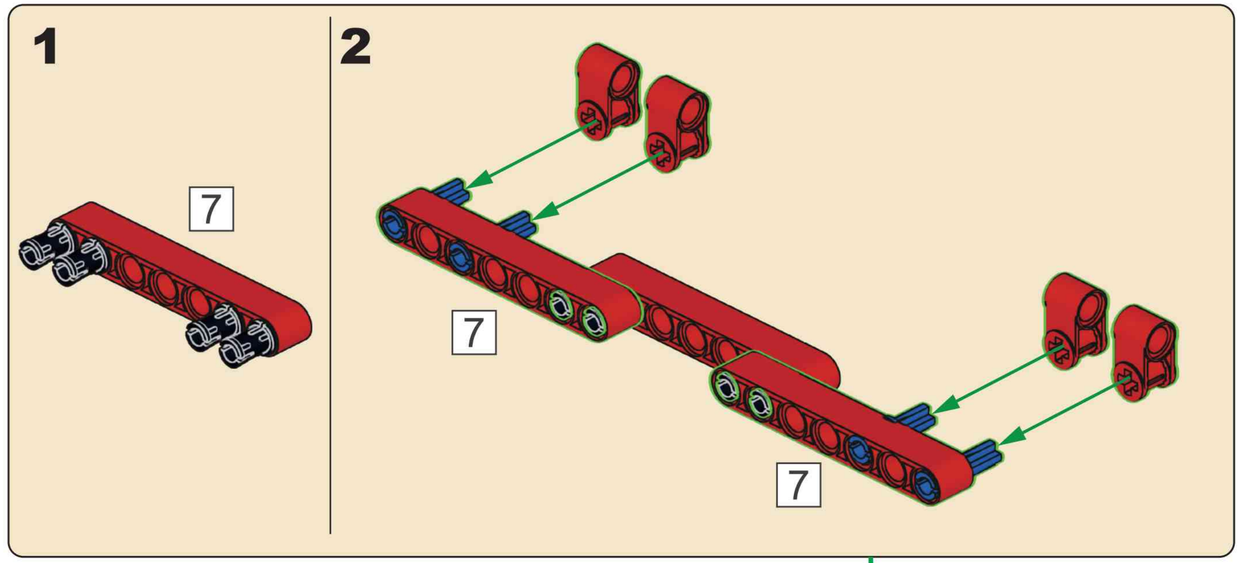

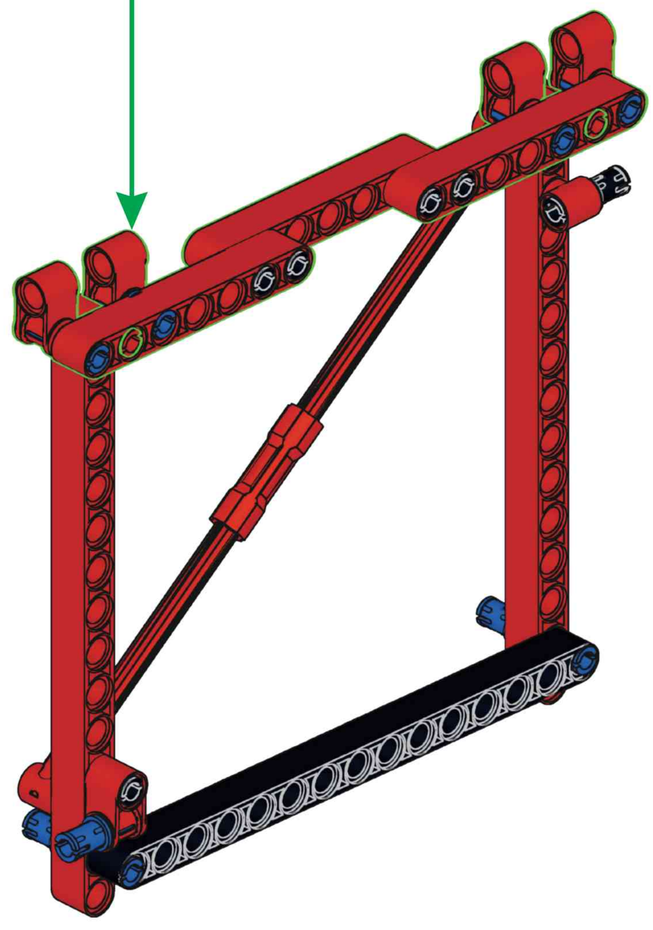

R88

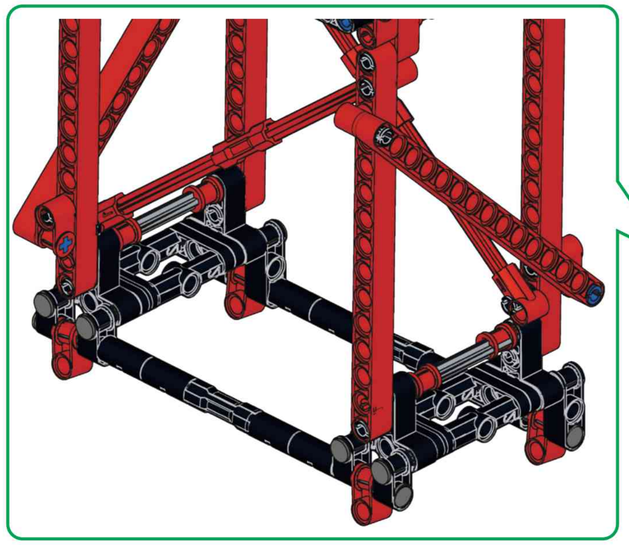

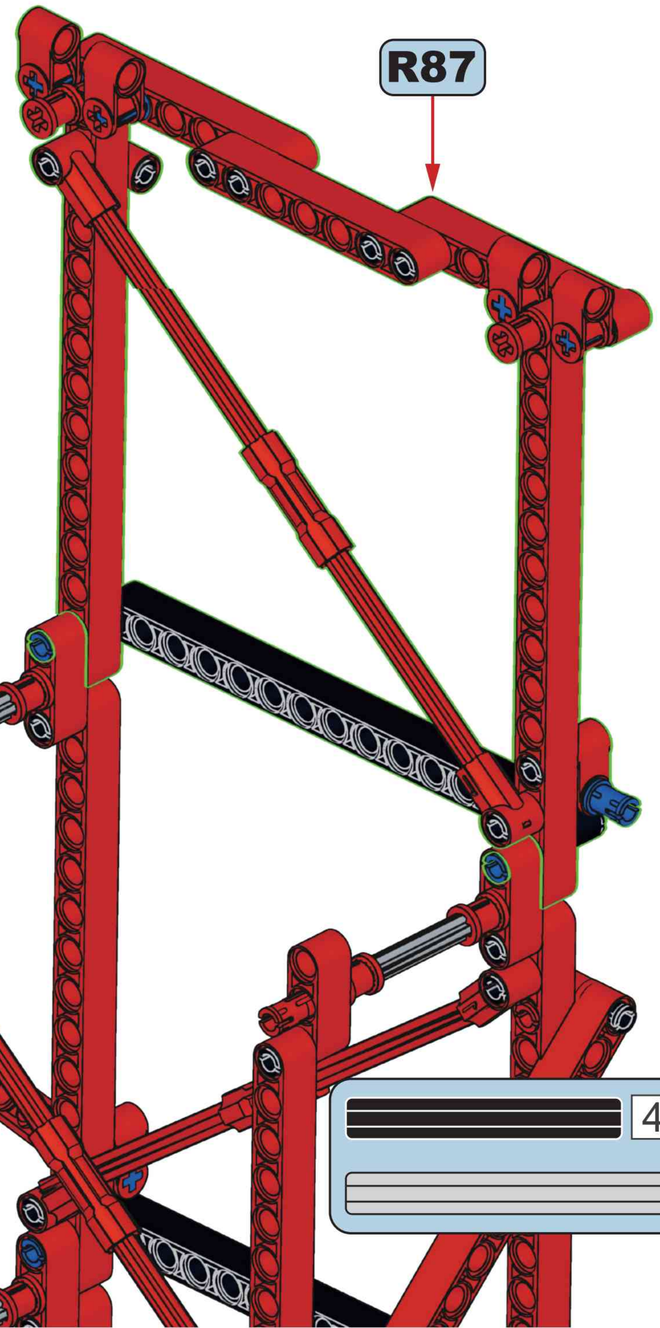

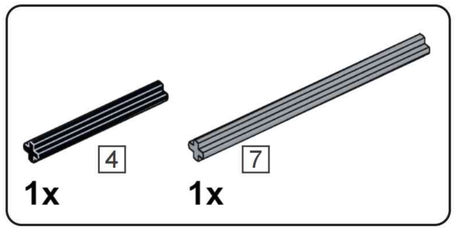

R89

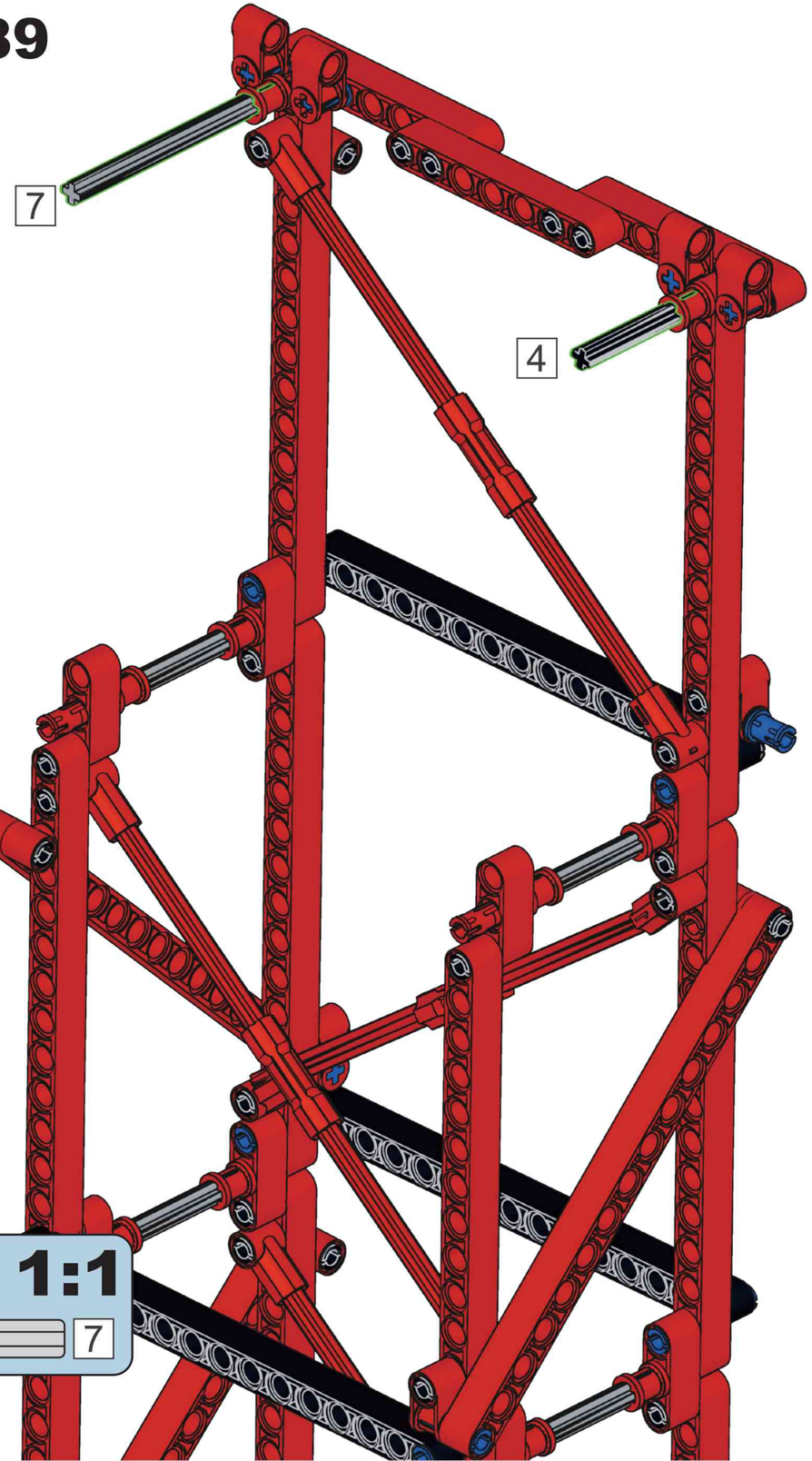

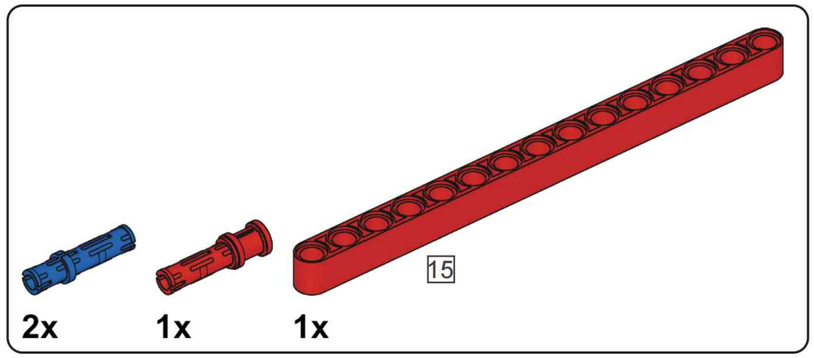

R90

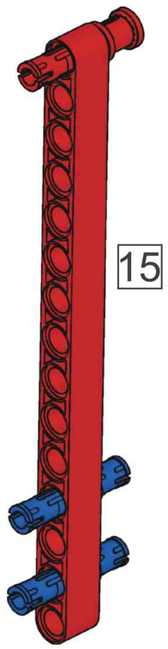

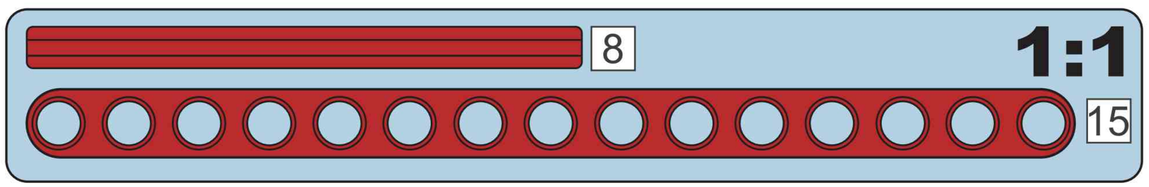

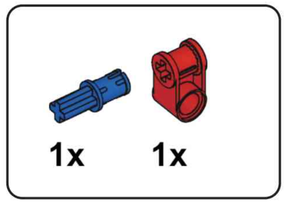

R91

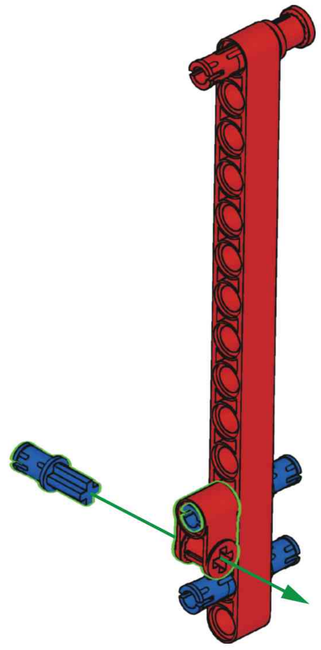

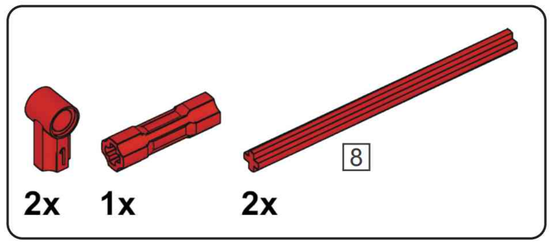

R92

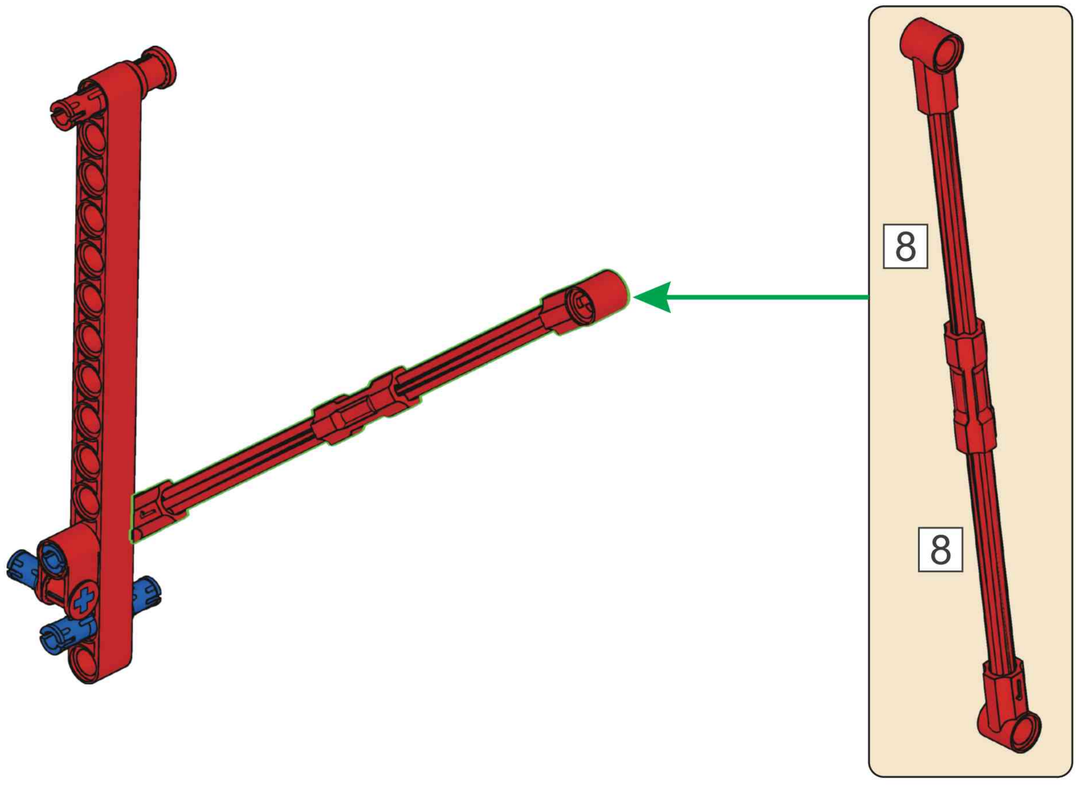

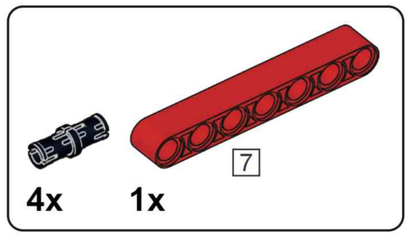

R93

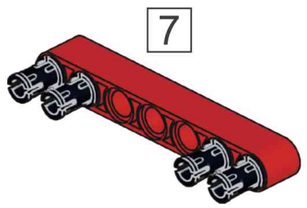

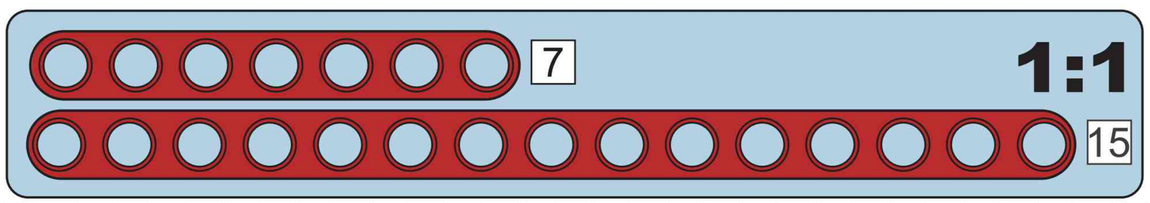

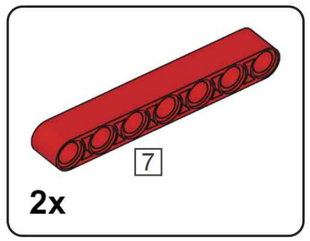

R94

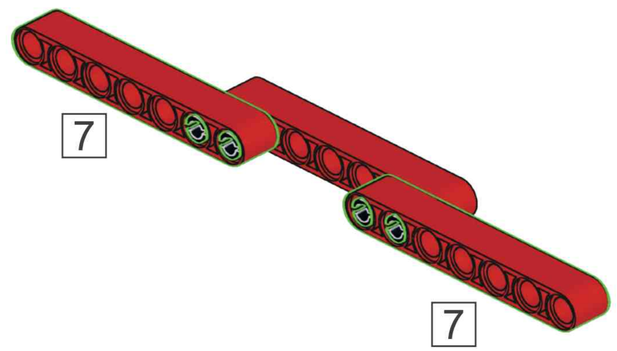

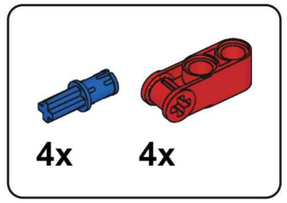

R95

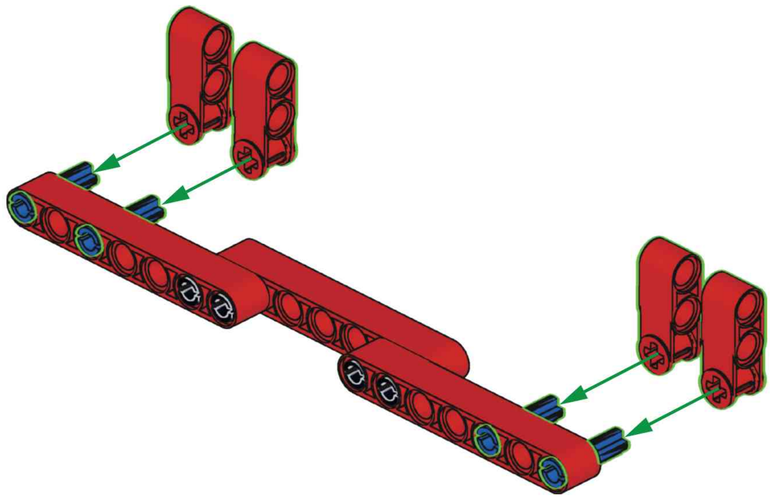

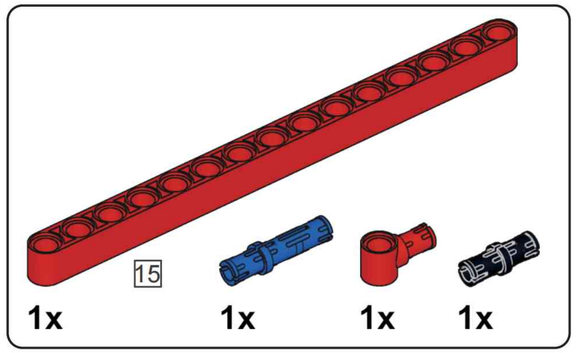

R96

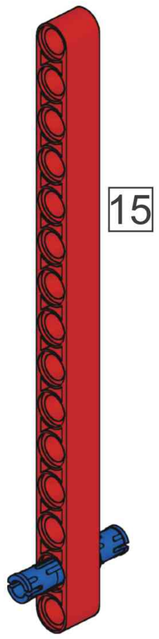

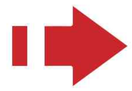

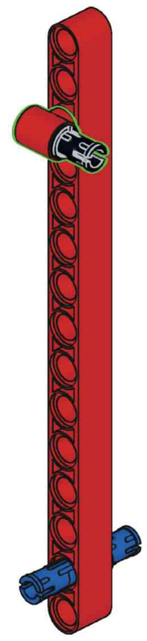

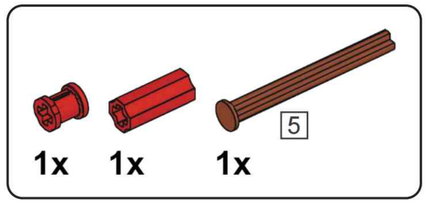

R97

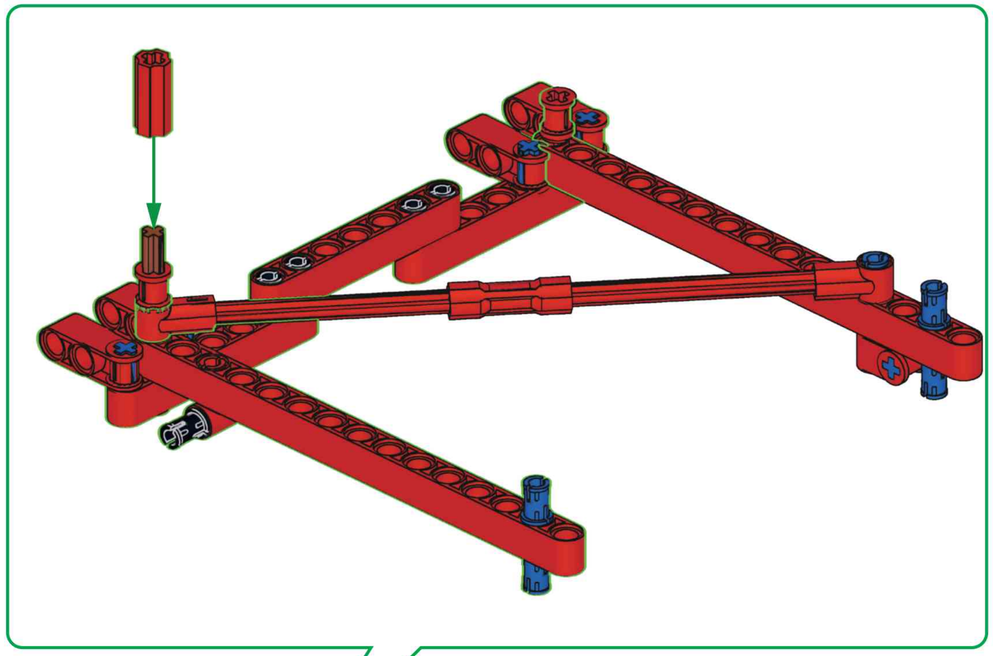

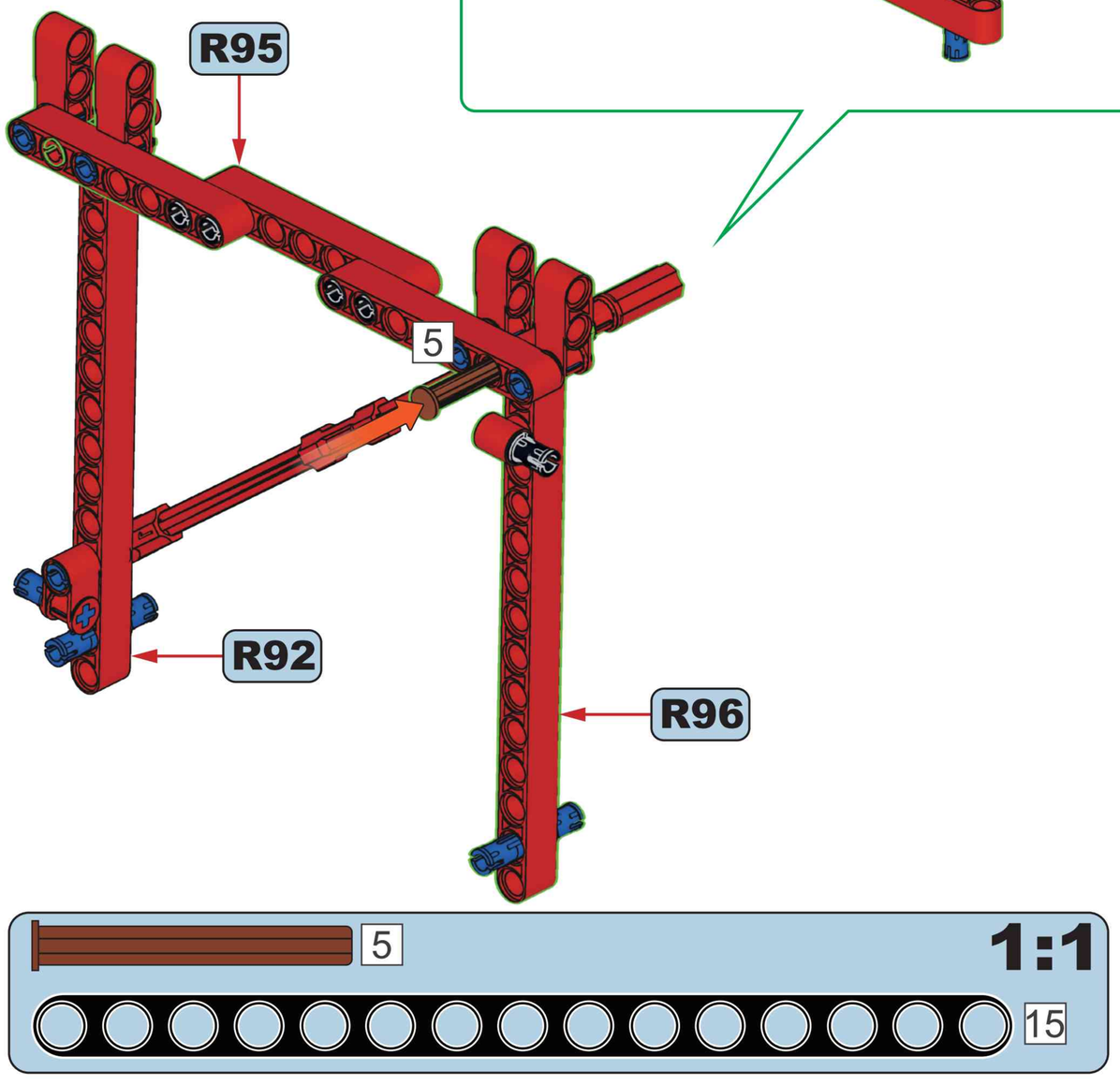

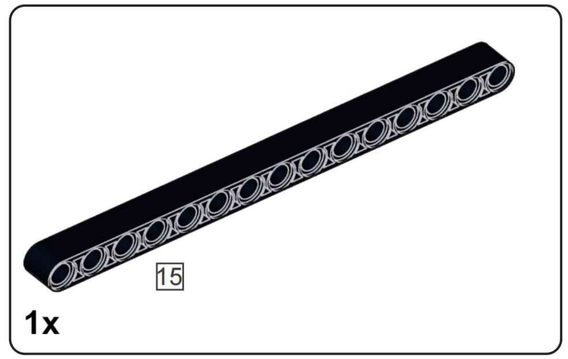

R98

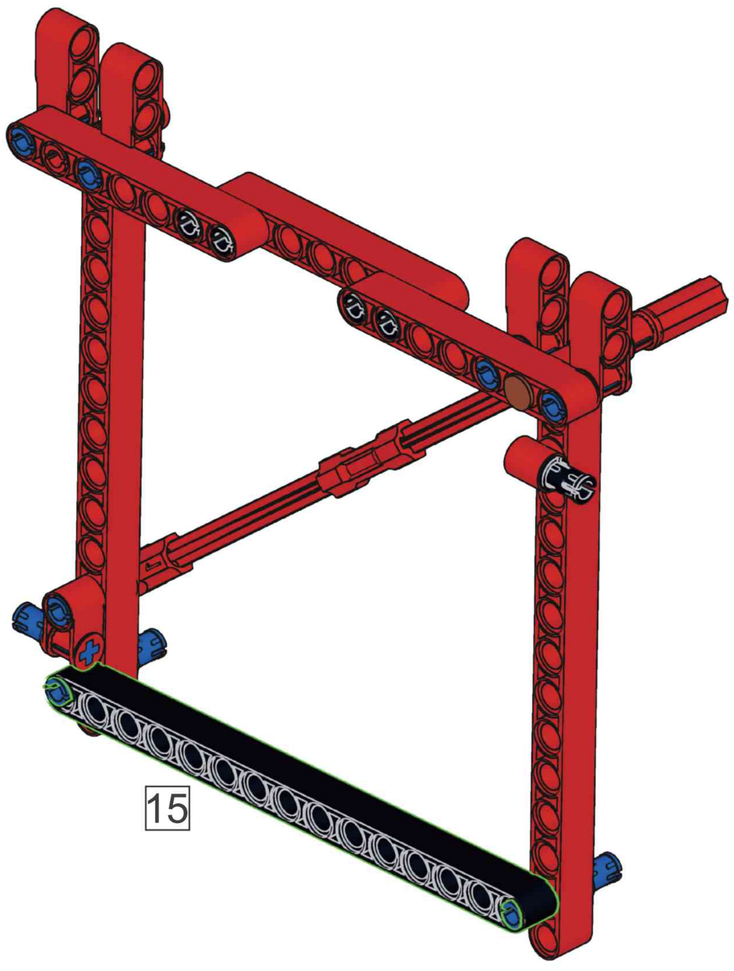

R99

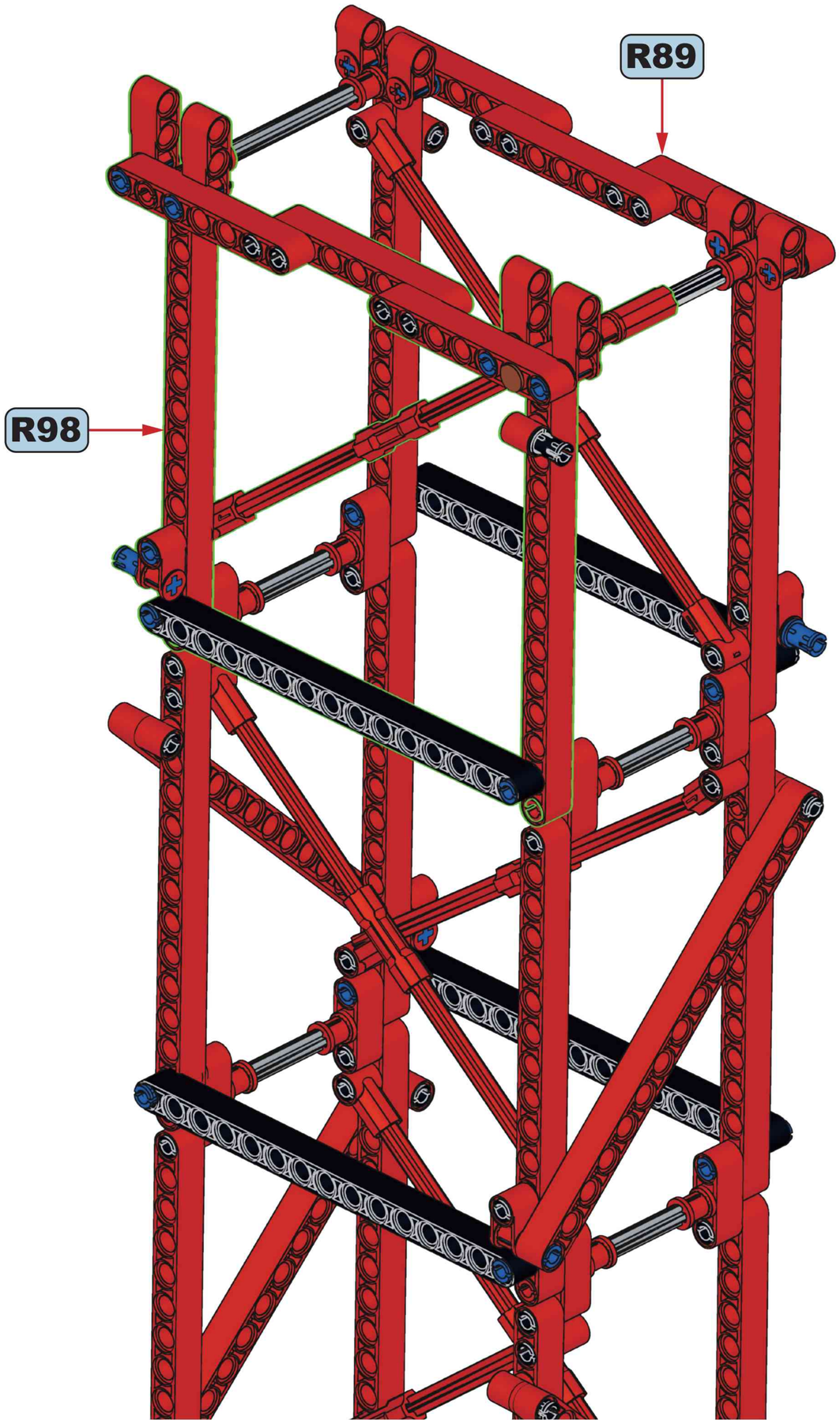

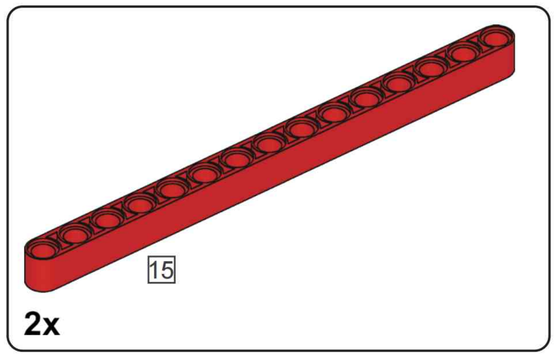

R100

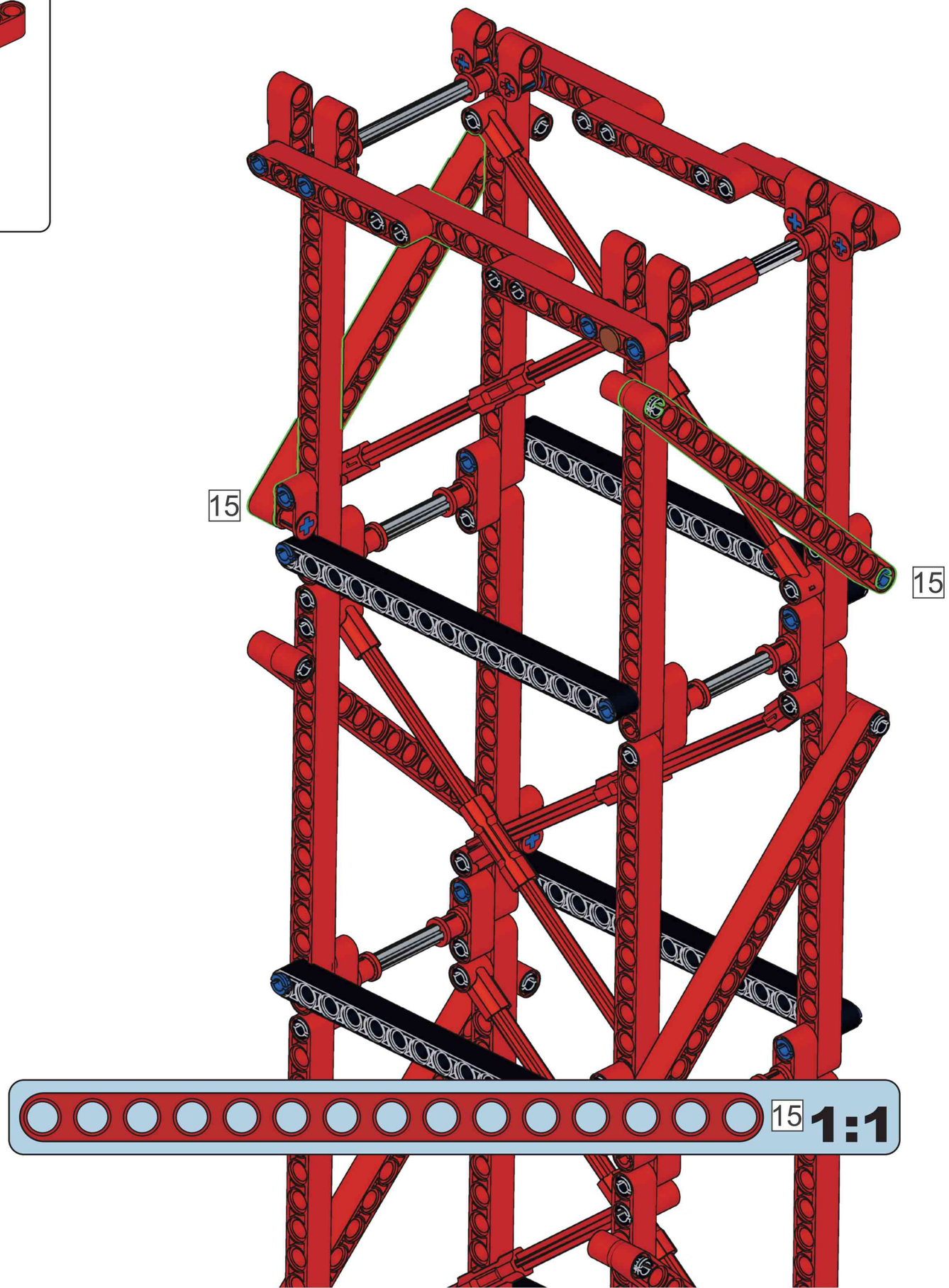

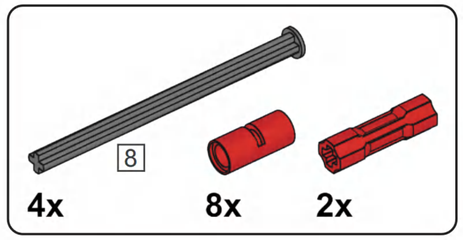

R101

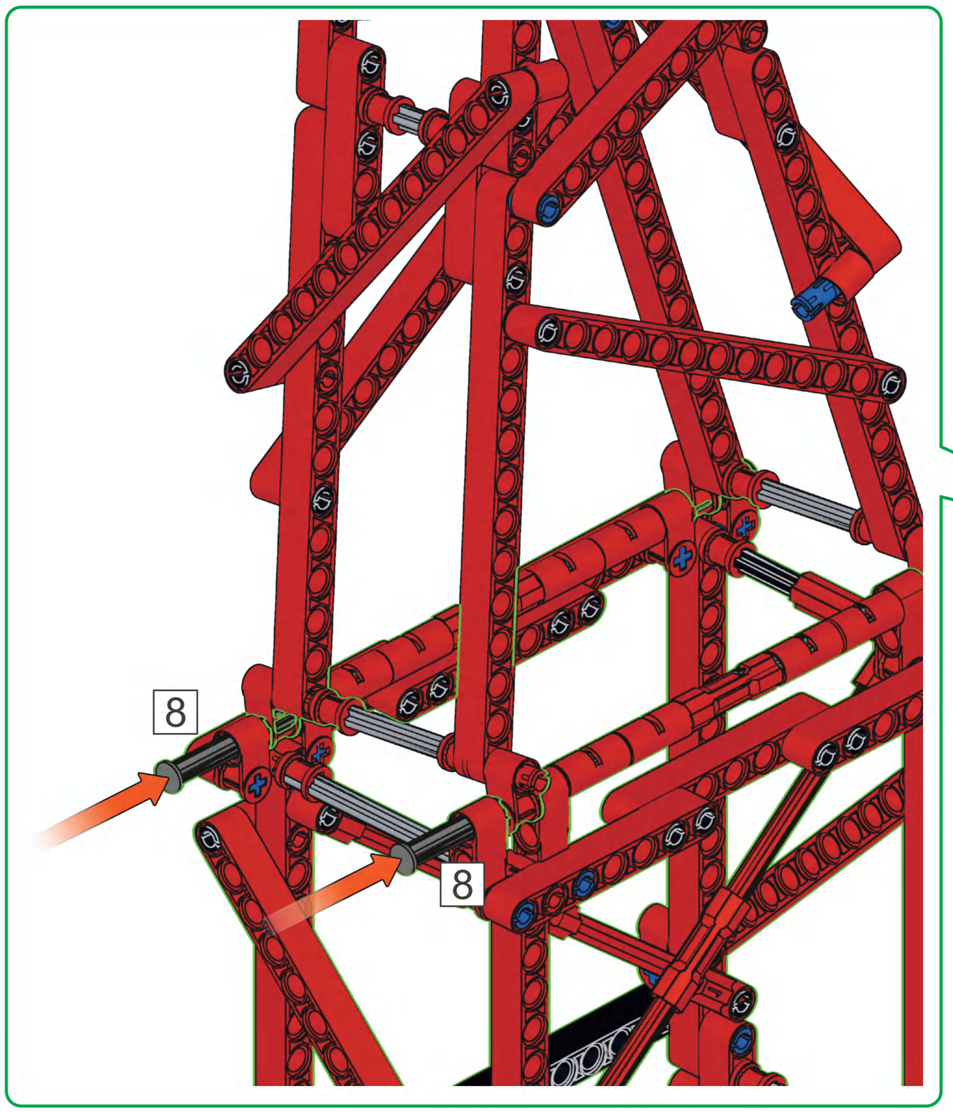

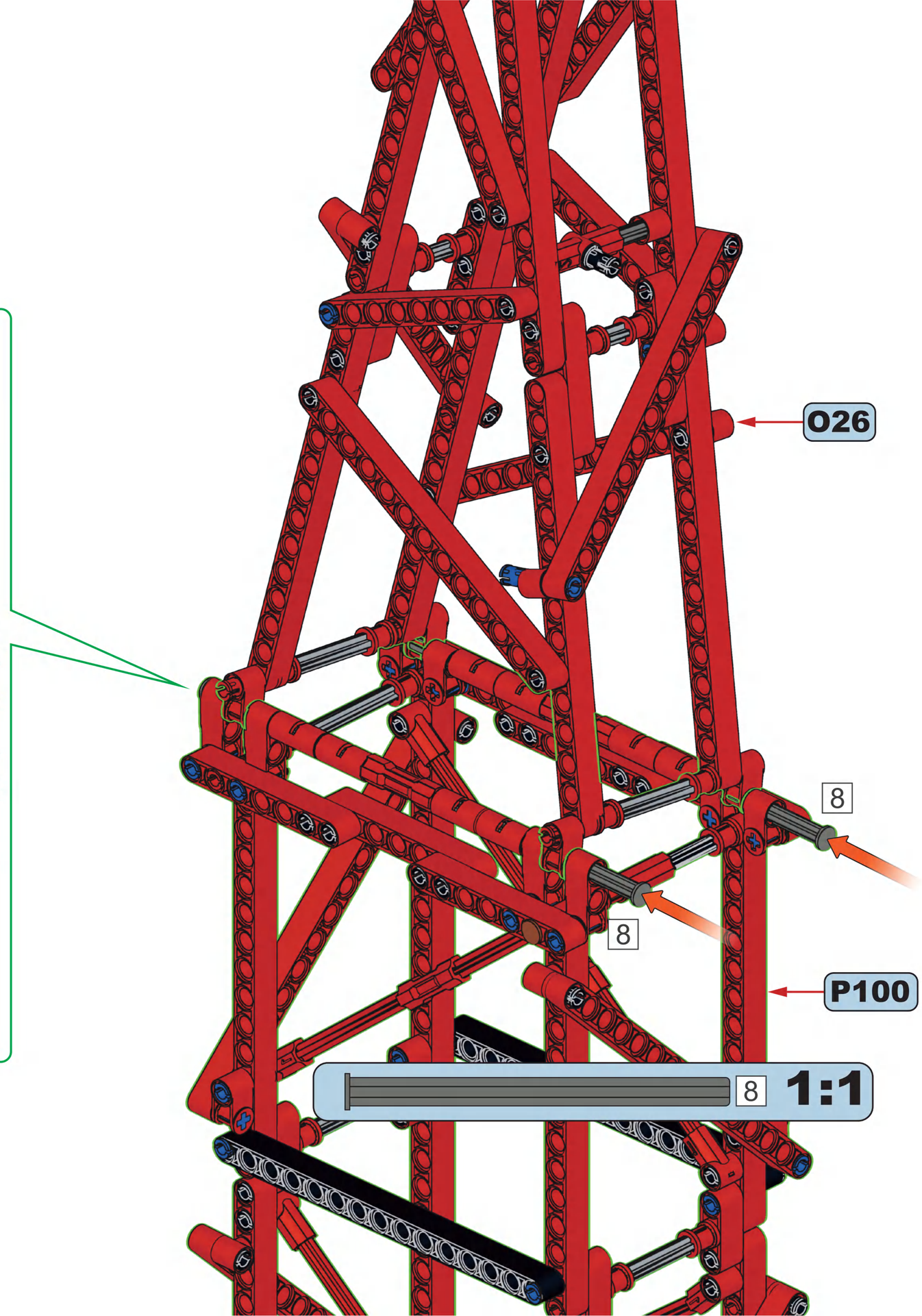

R102

1

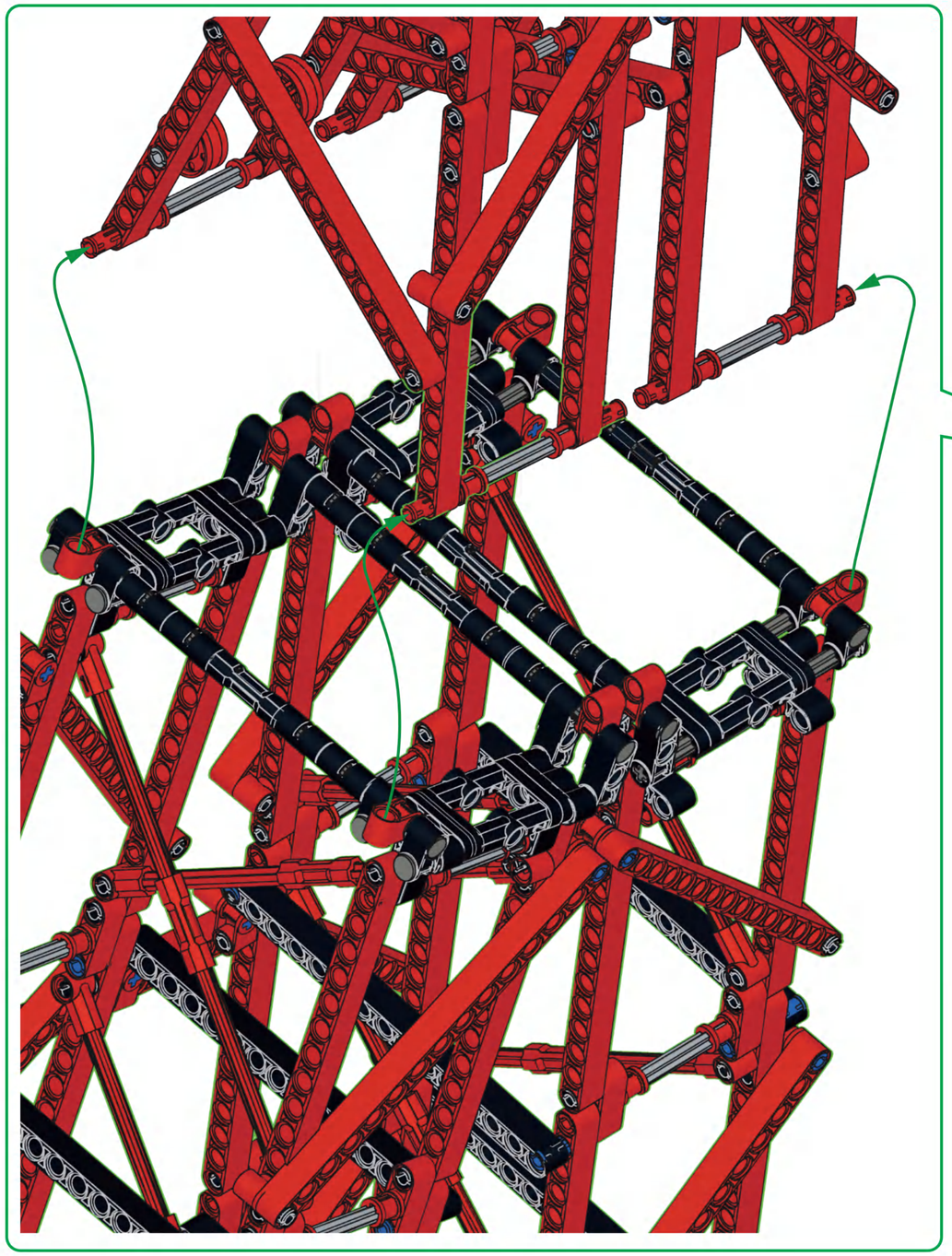

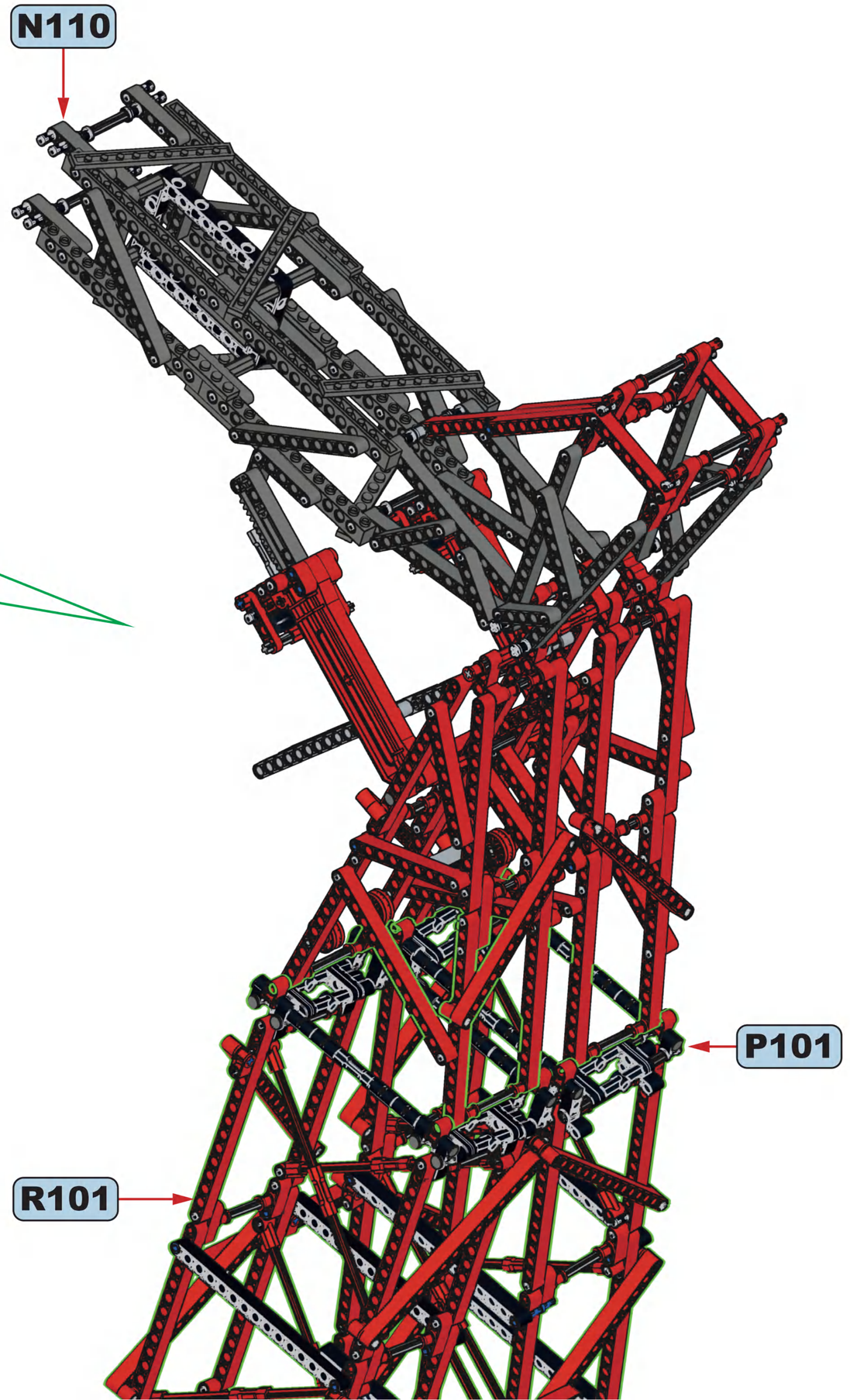

2

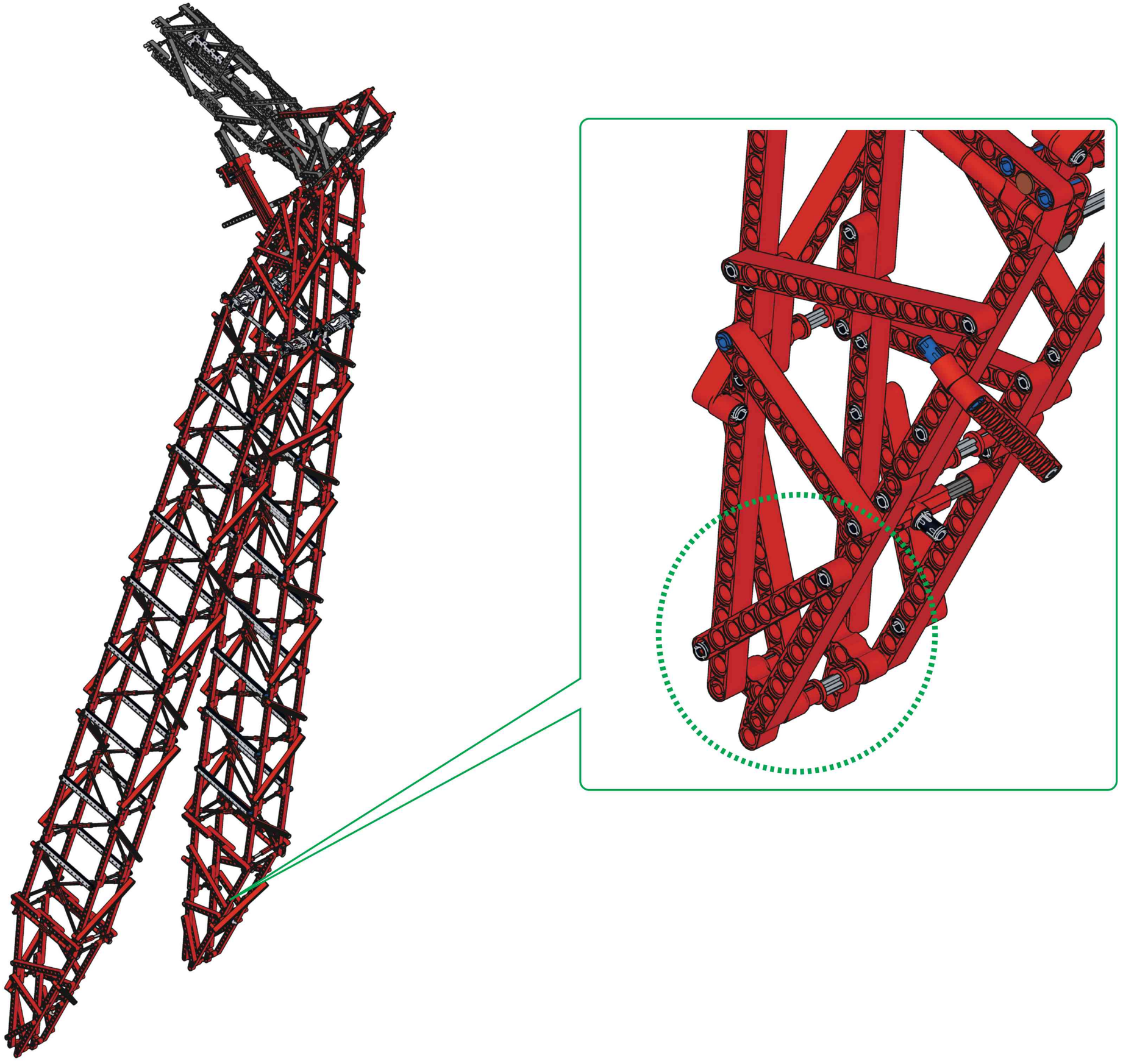

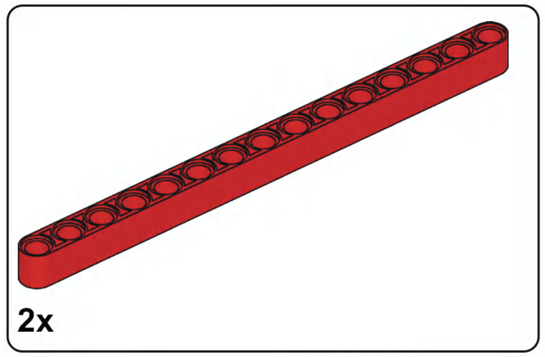

R103





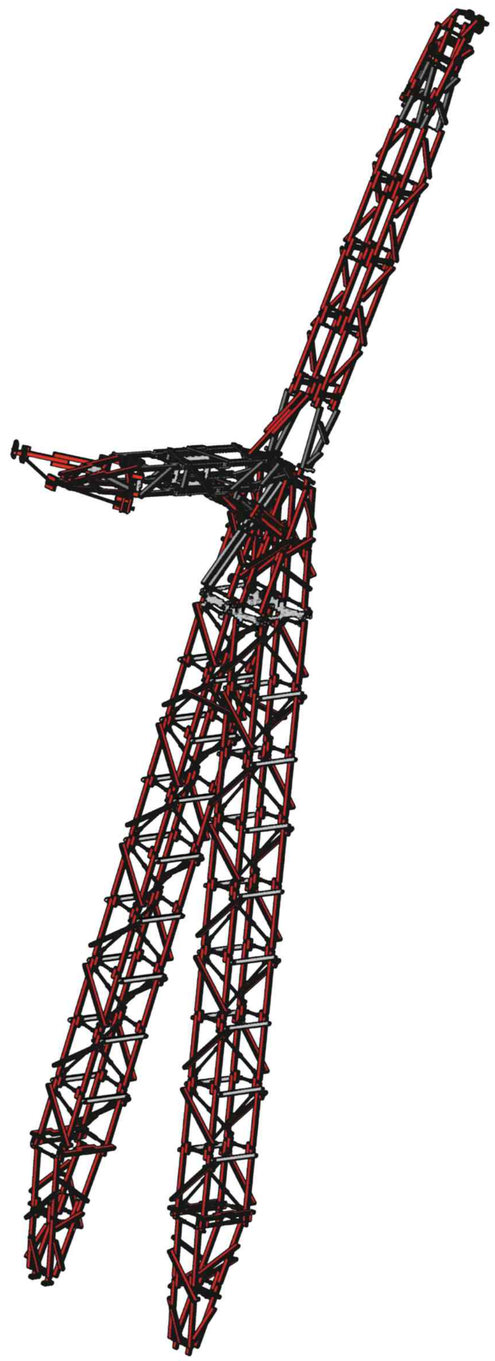

S

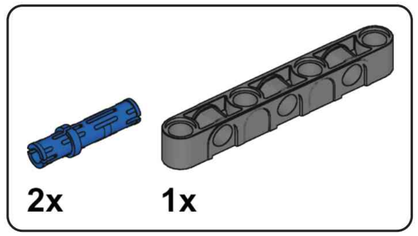

S1

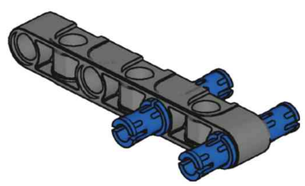

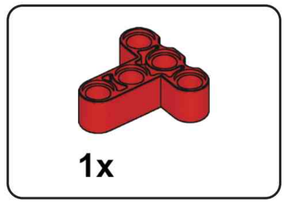

S2

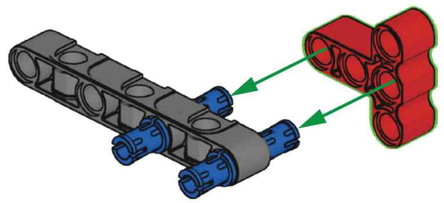

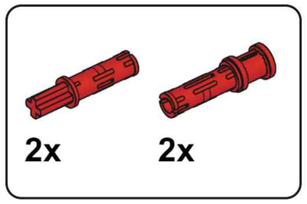

S3

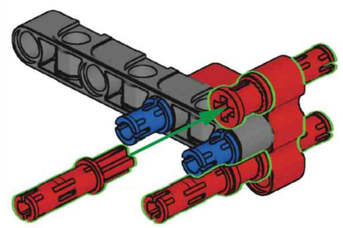

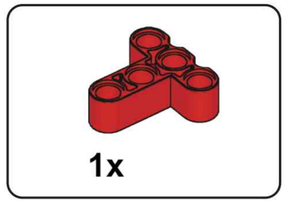

S4

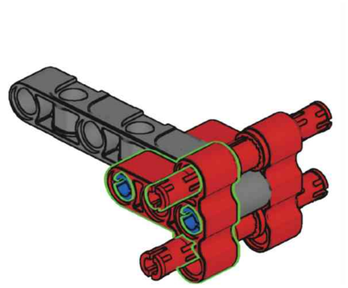

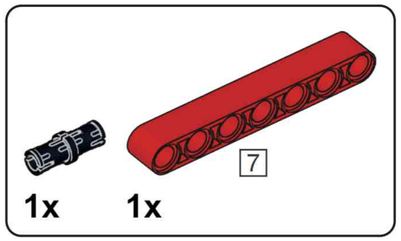

S5

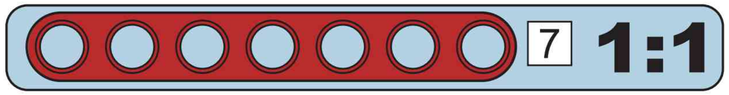



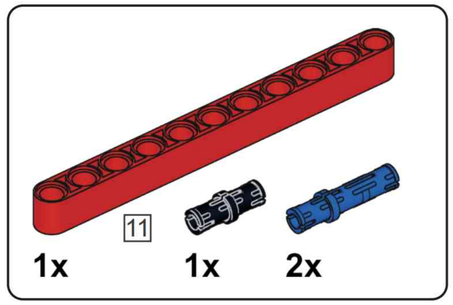

S6

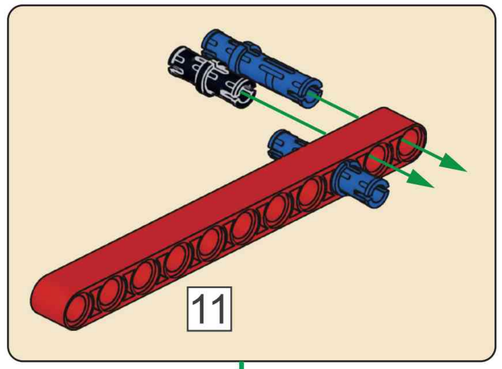

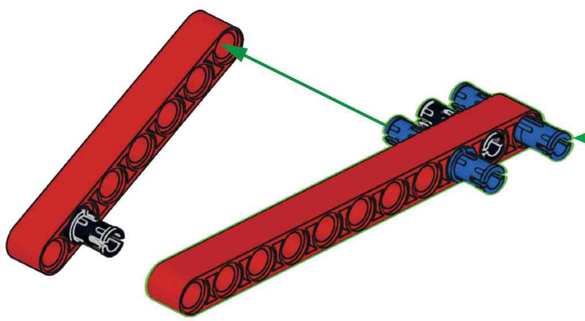

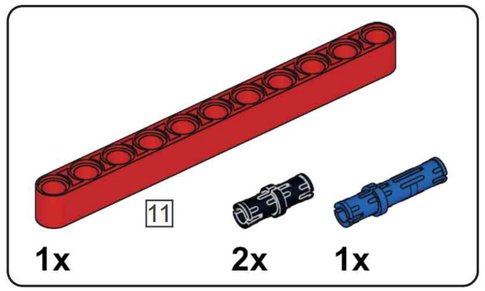

S7

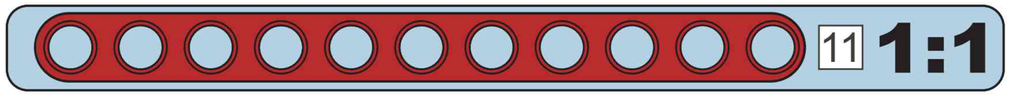

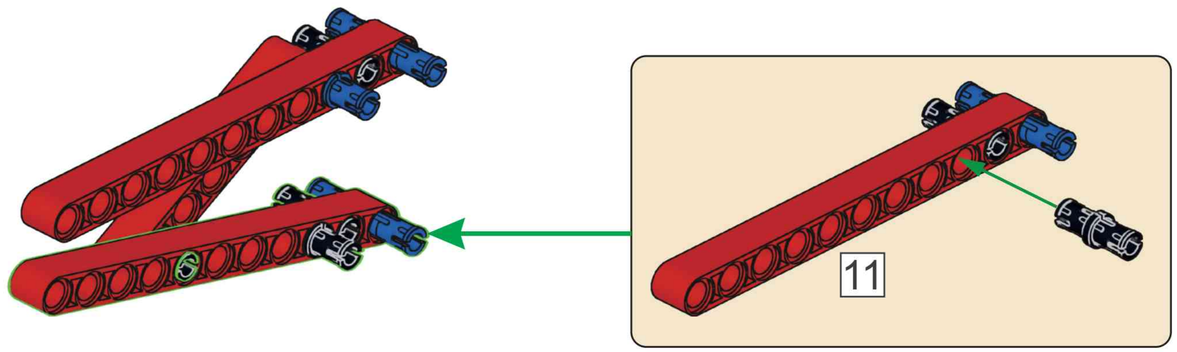

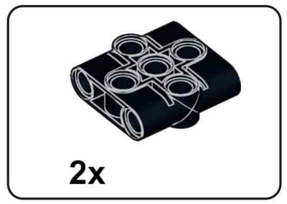

S8

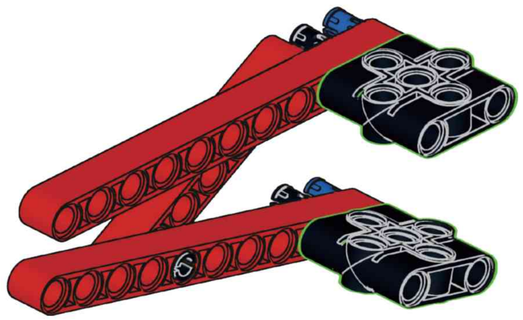

S9

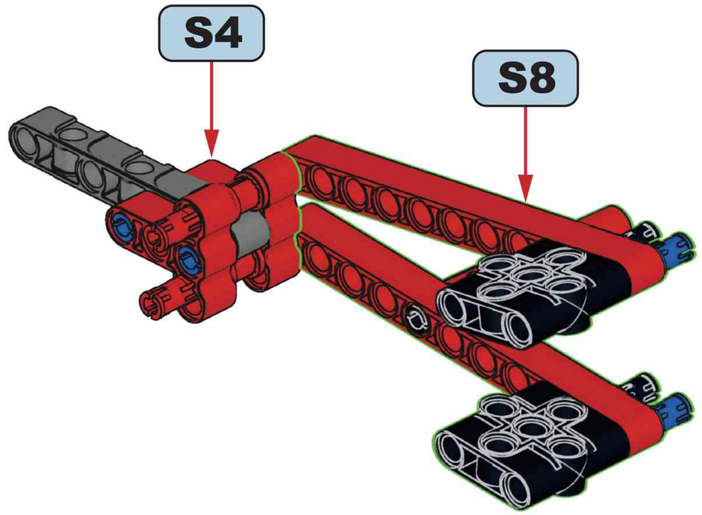

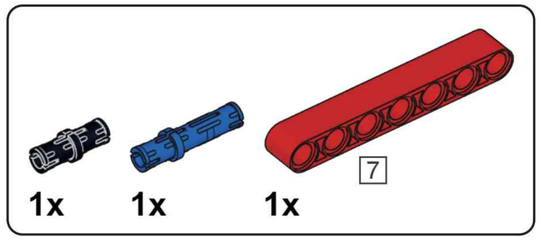

S10



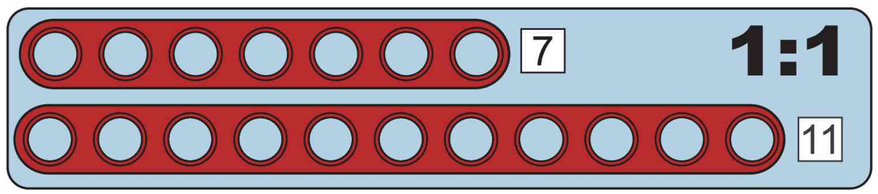

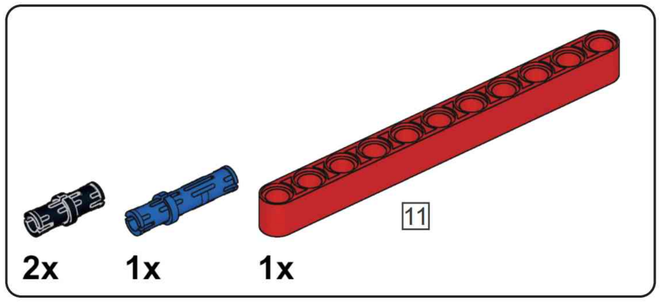

S11

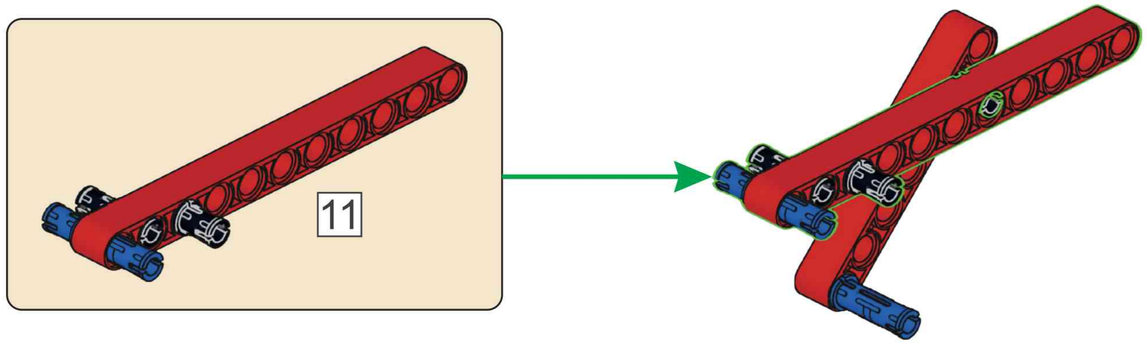

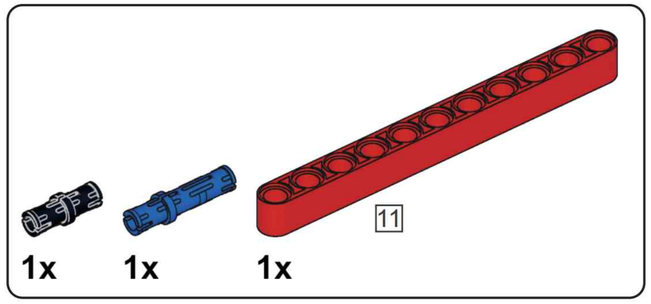

S12

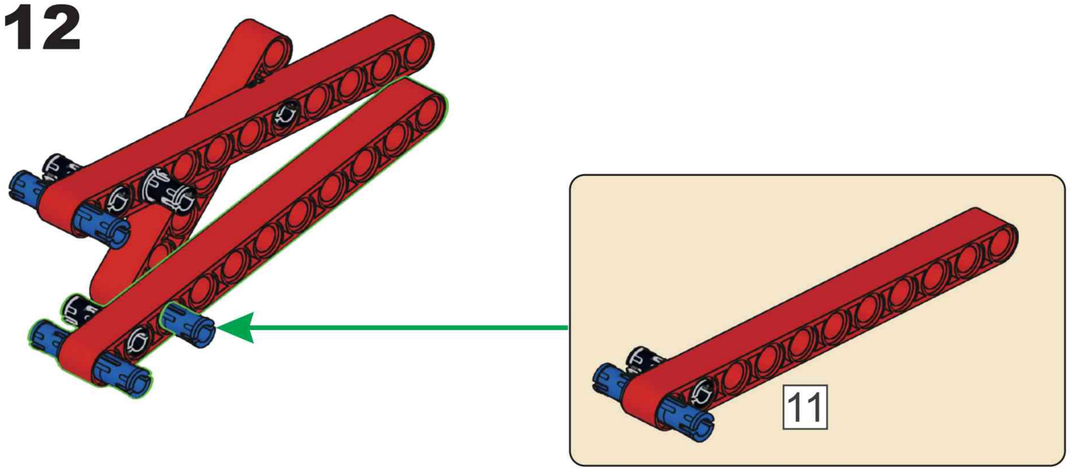

S13

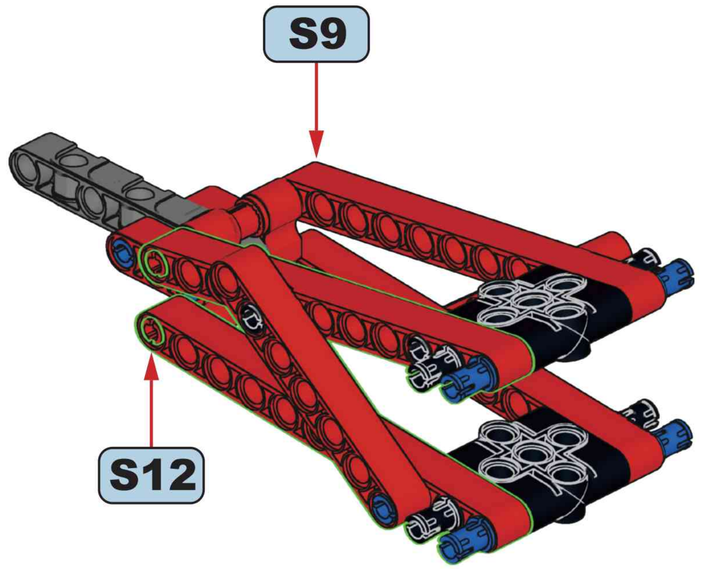

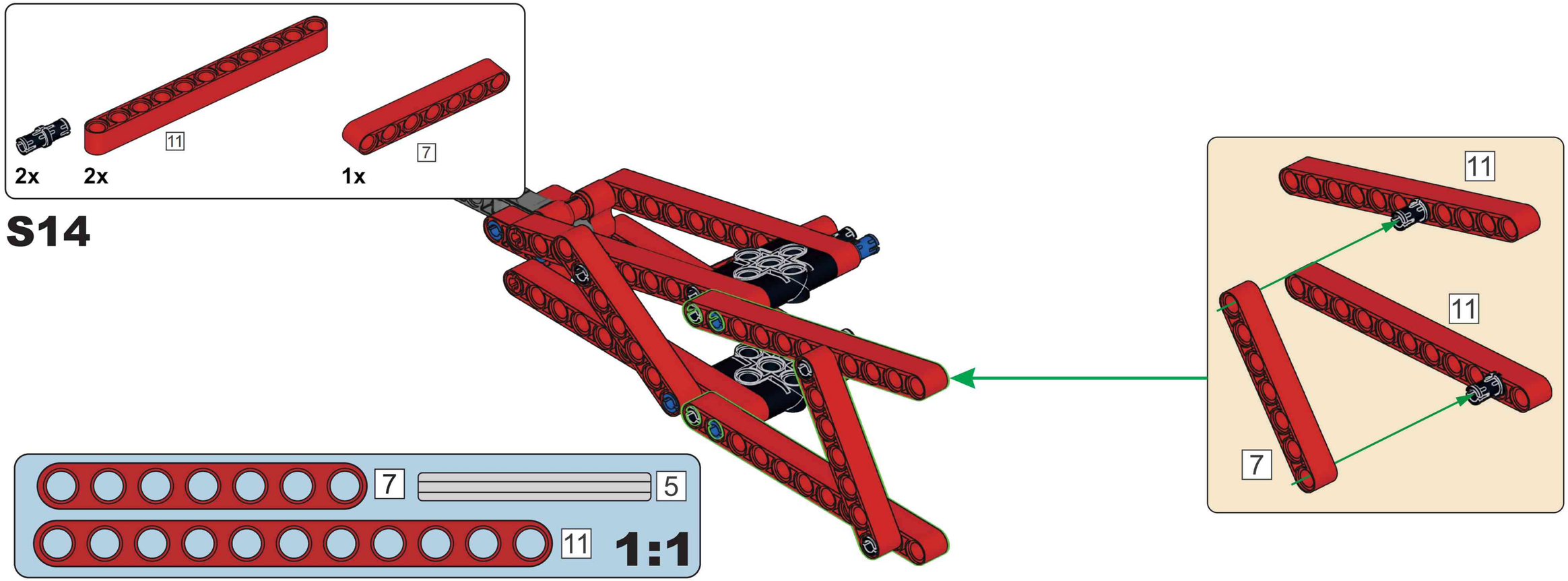

S14

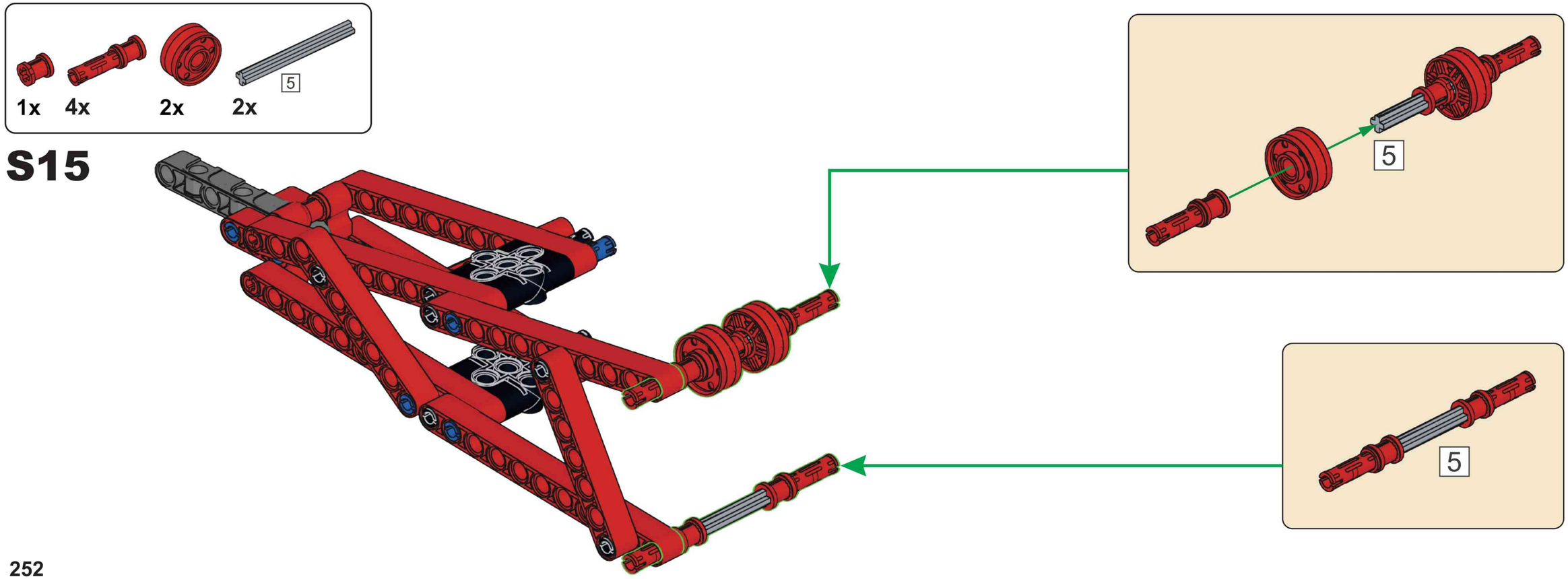

S15

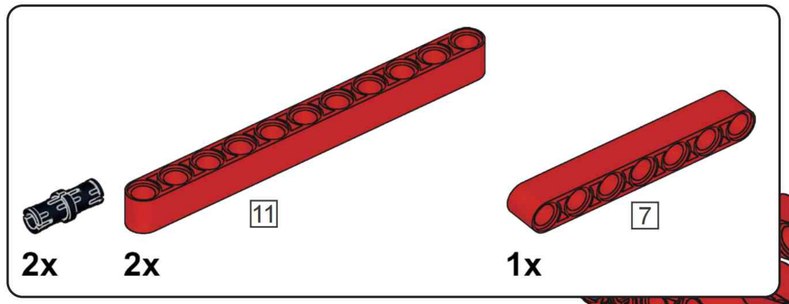

S16

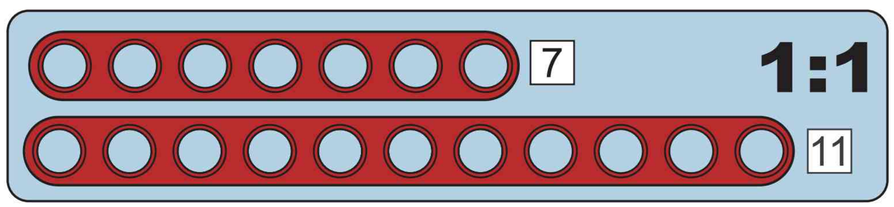

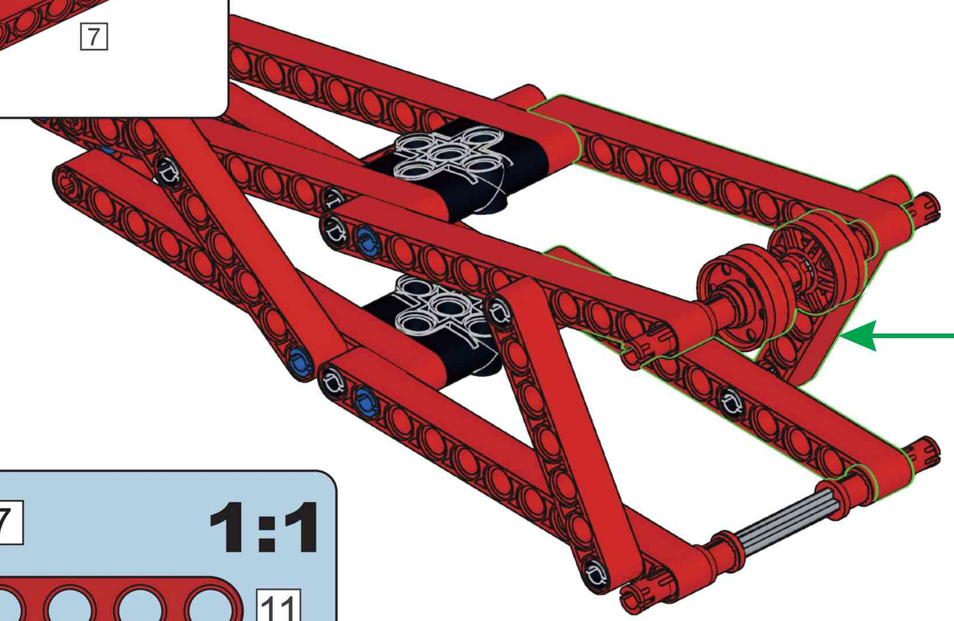

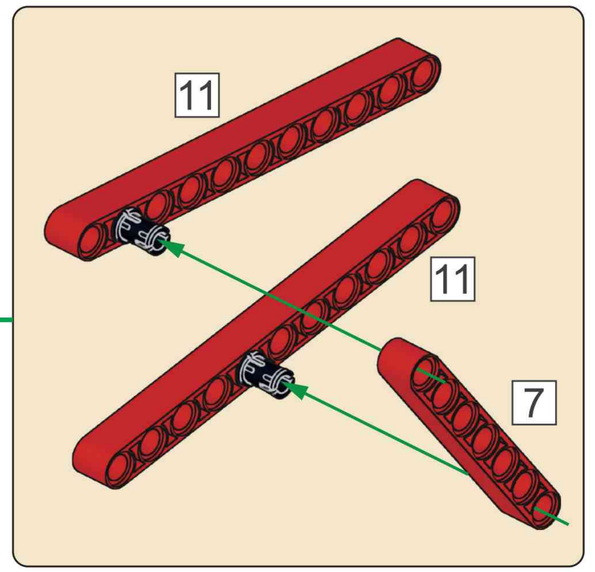

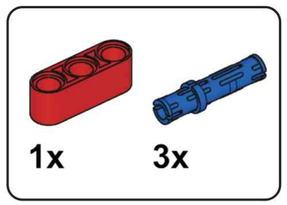

S17

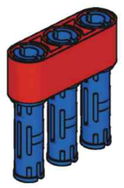

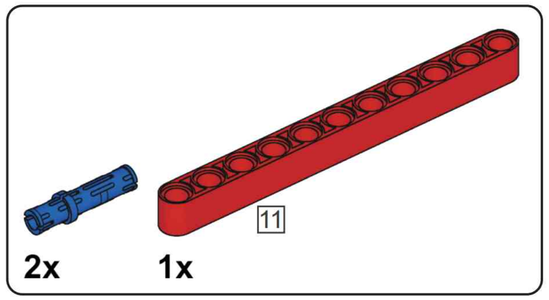

S18

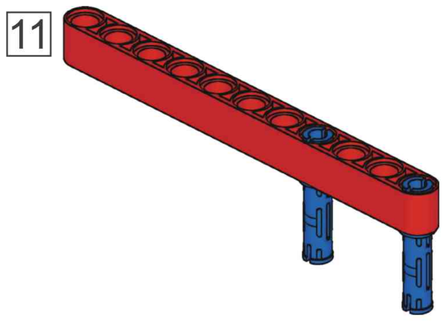

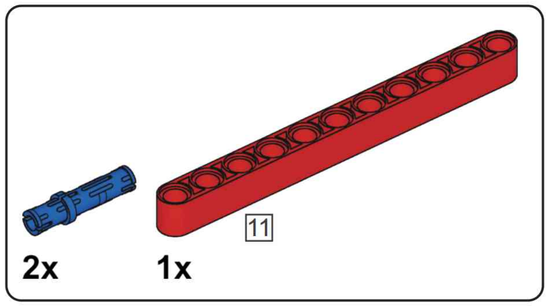

S19

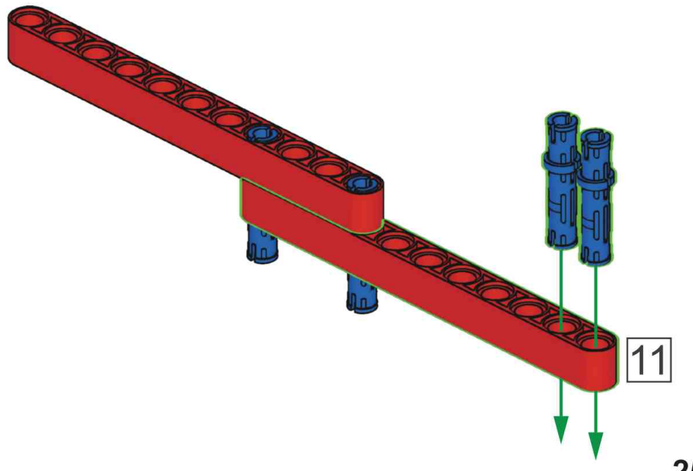

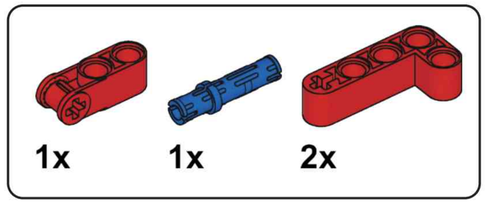

S20

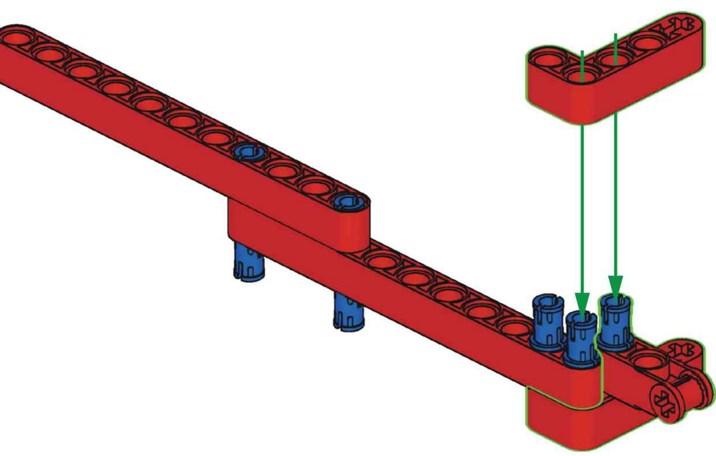

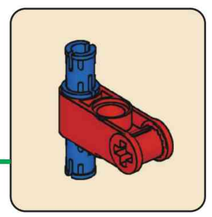

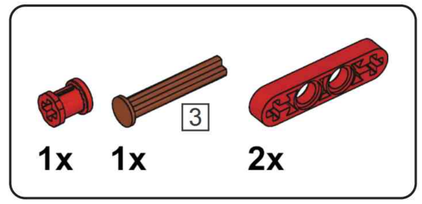

S21

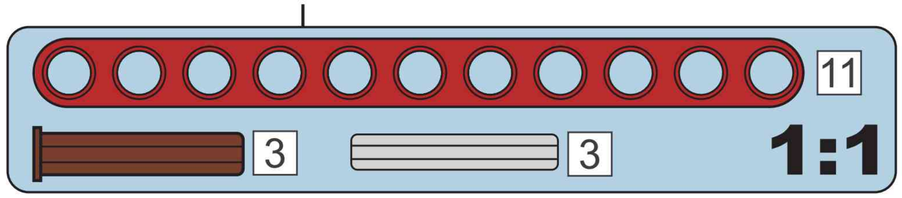

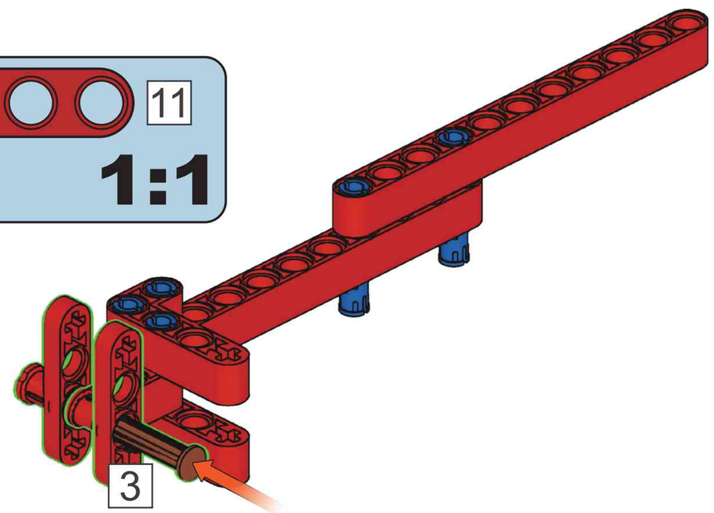

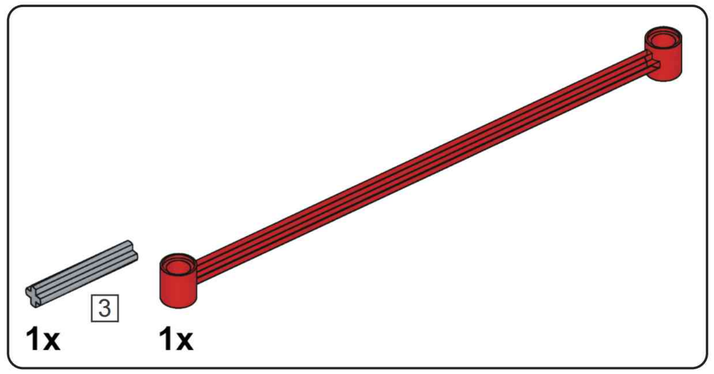

S22

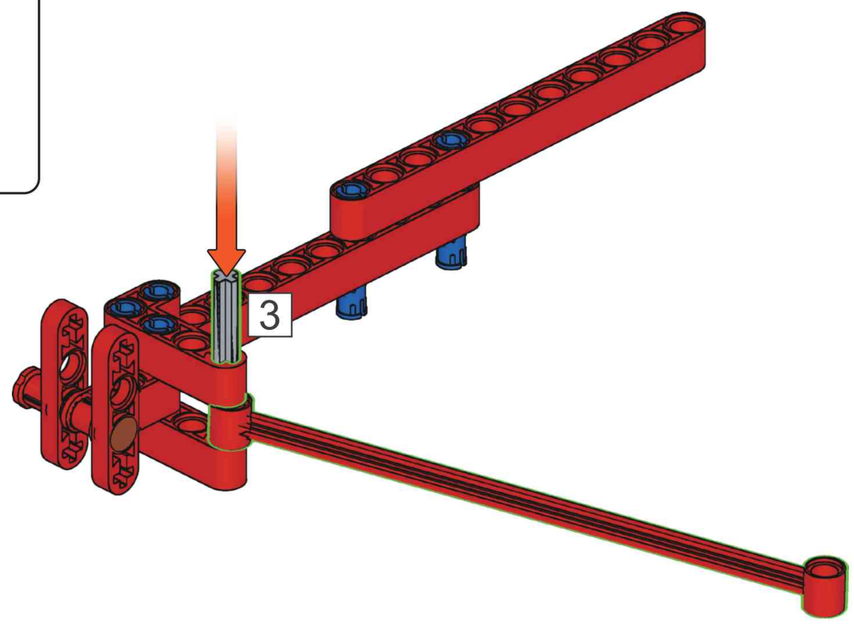

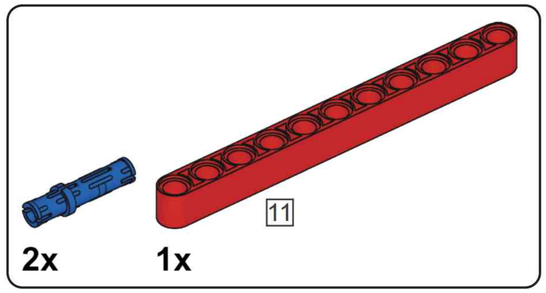

S23

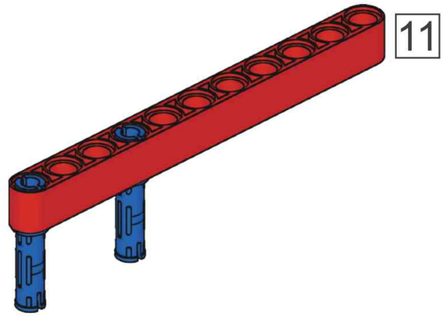

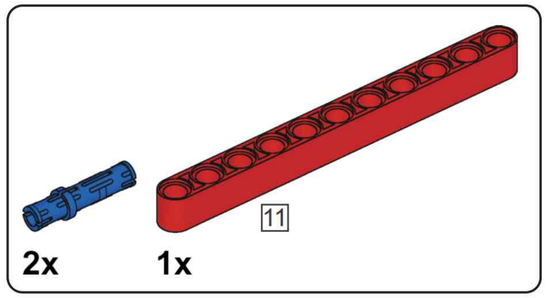

S24

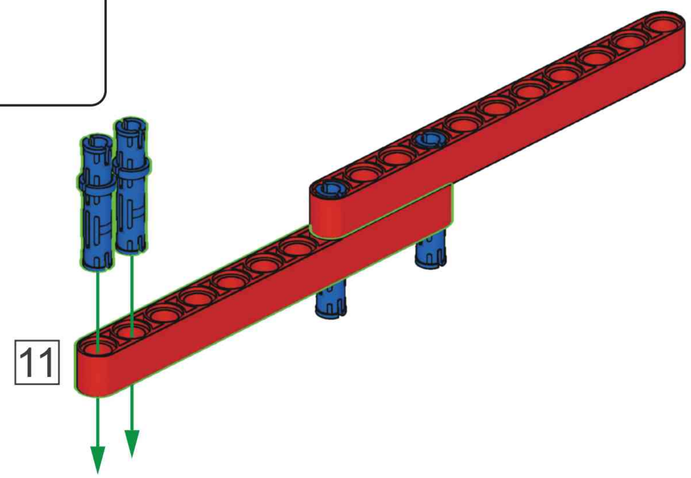

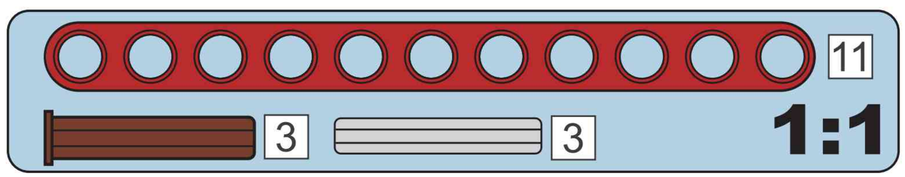

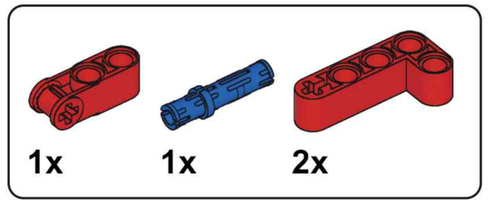

S25

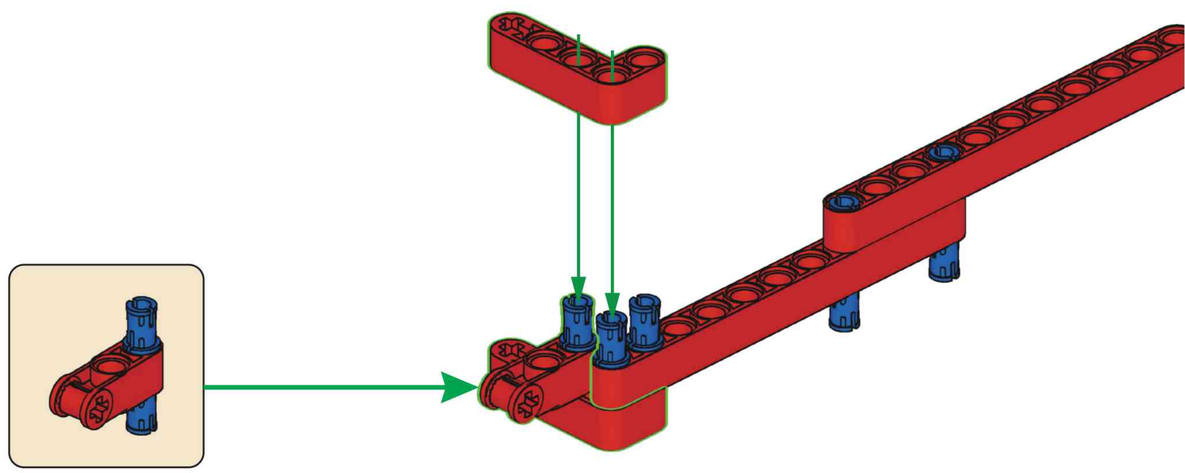

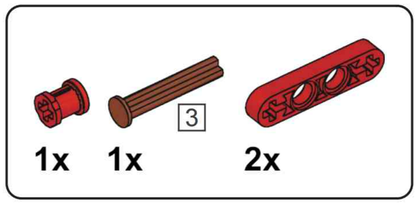

S26



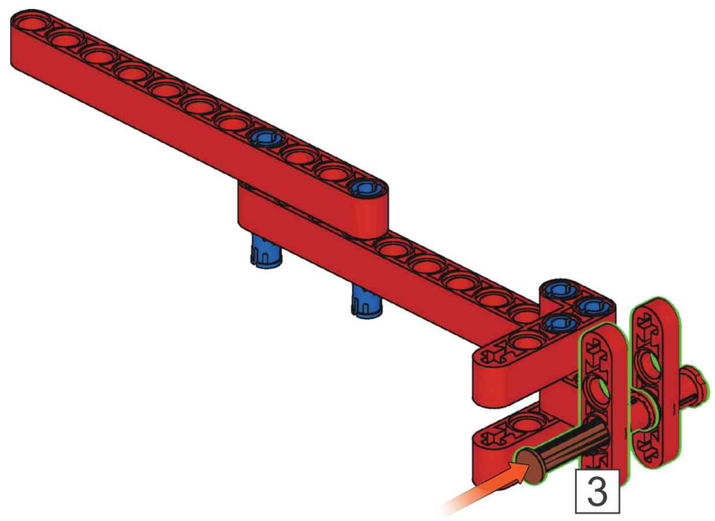

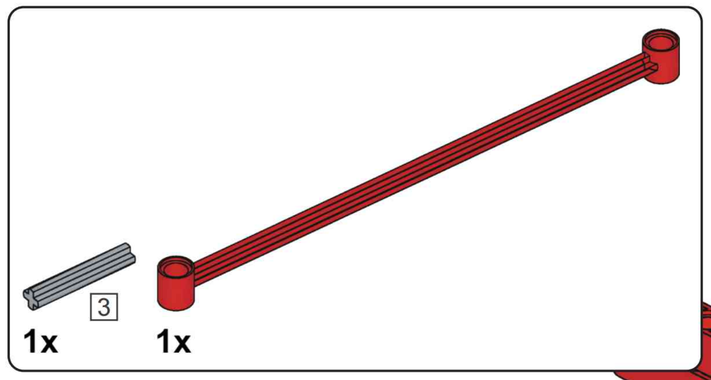

S27

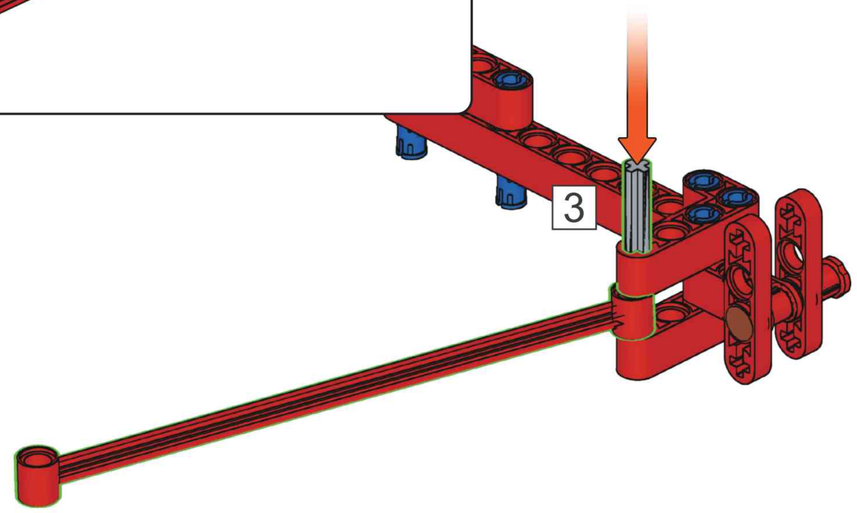

S28

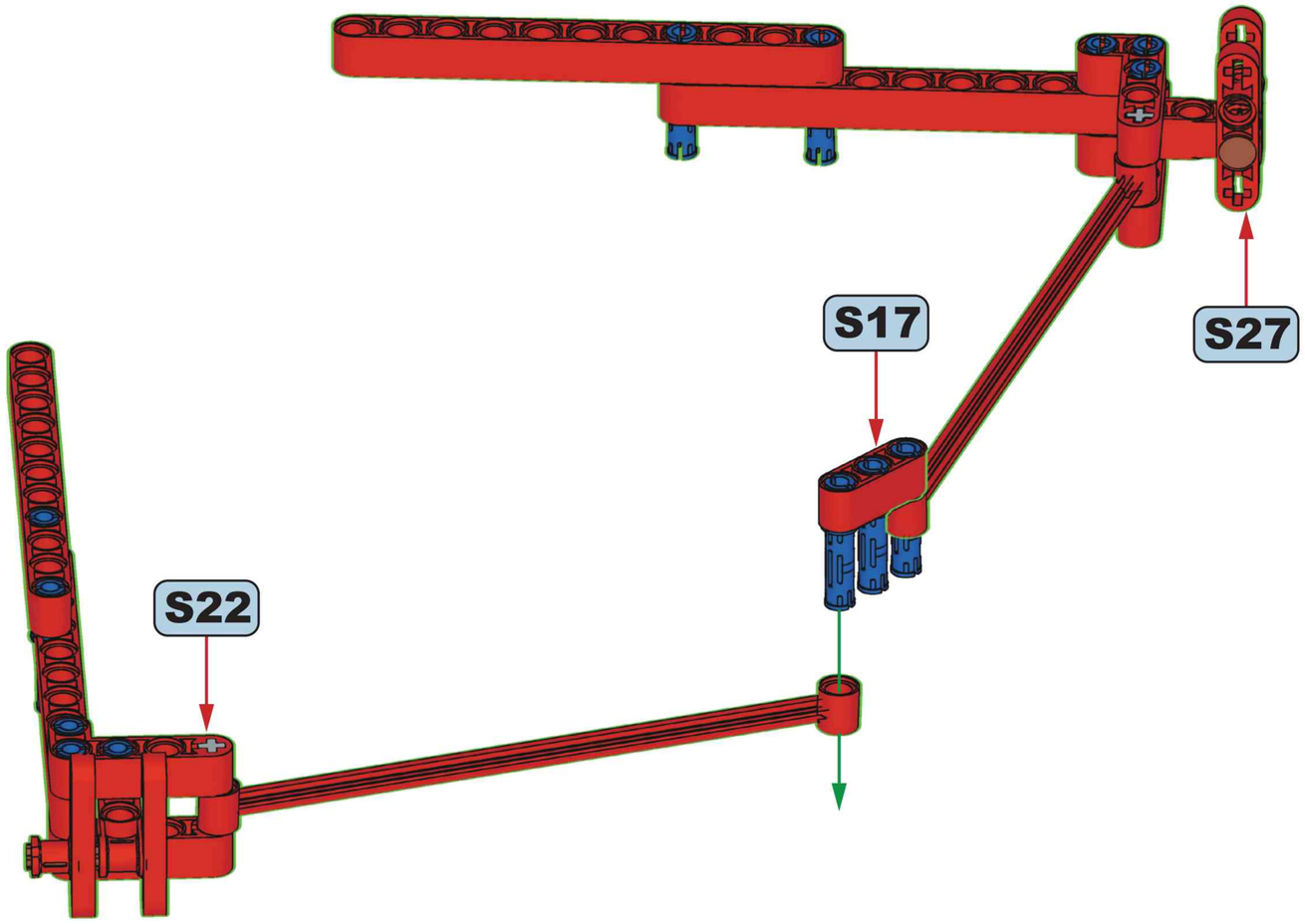

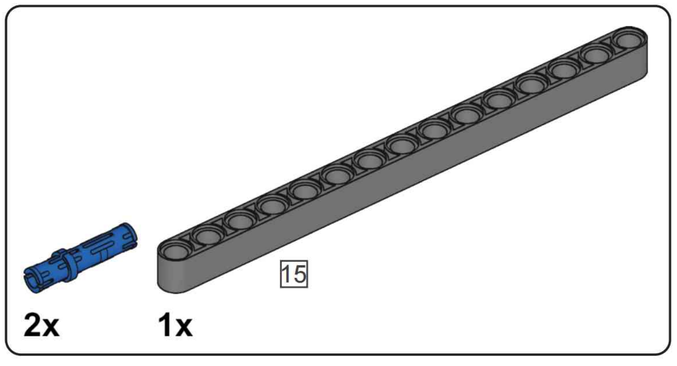

S29

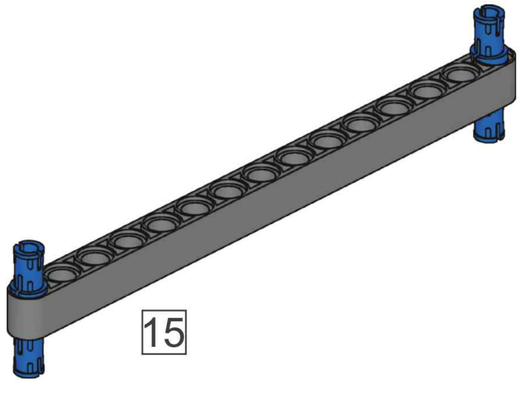

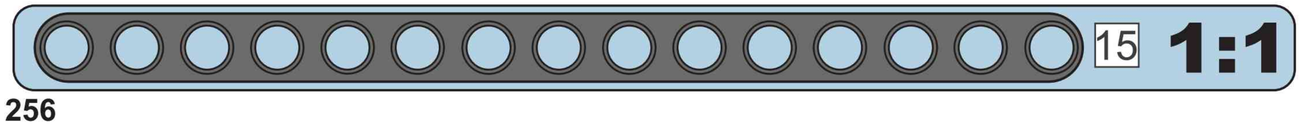

S30

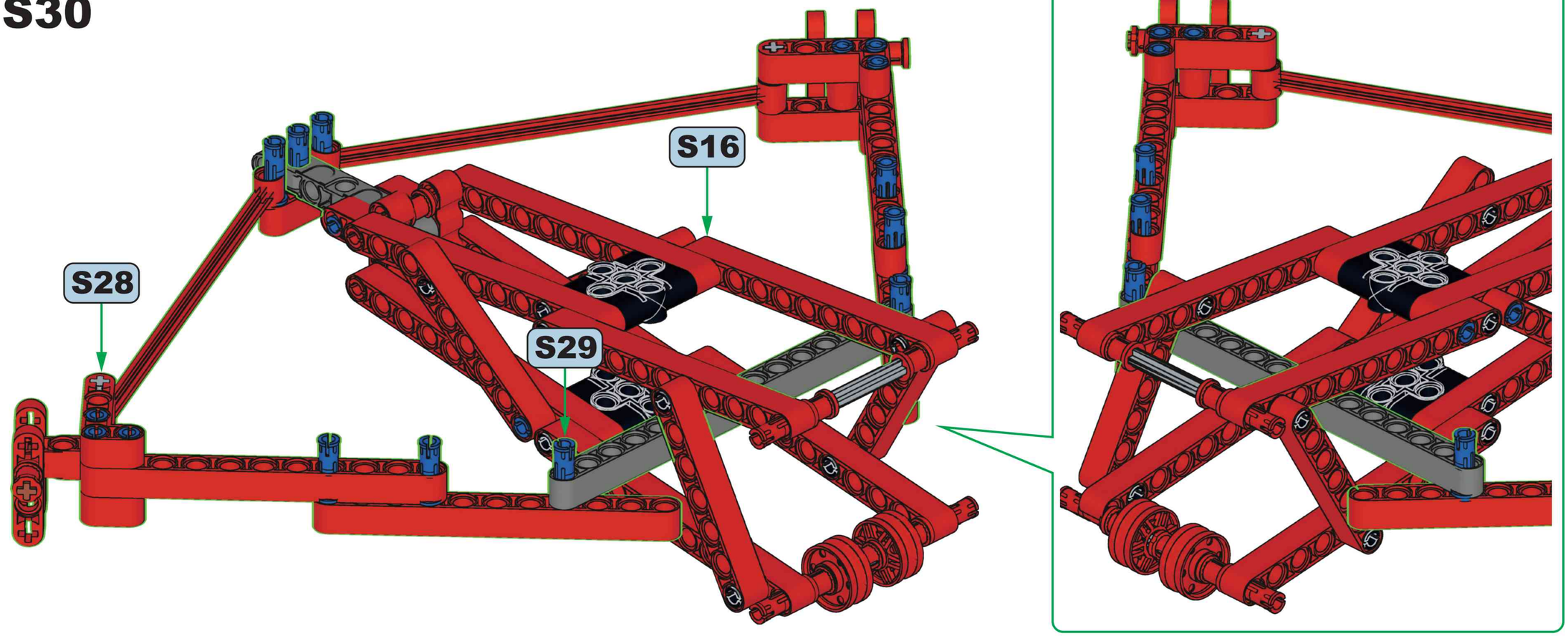

S31

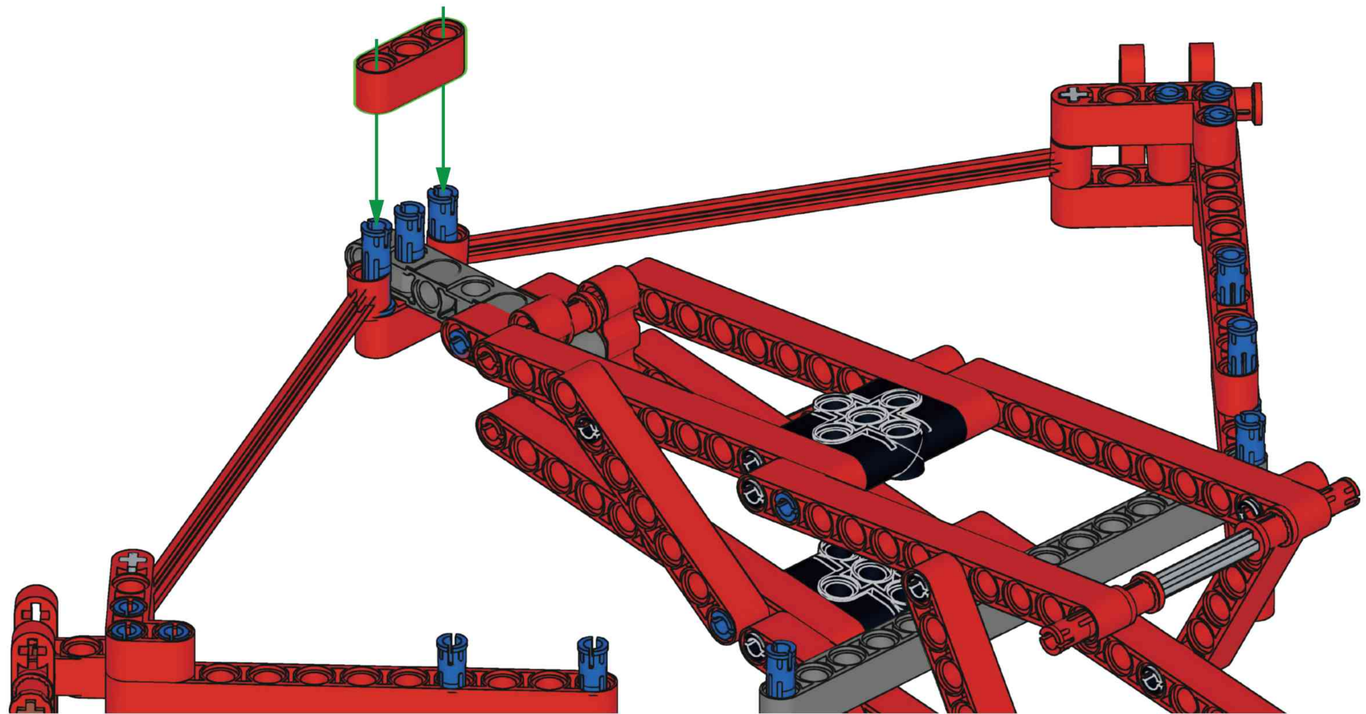

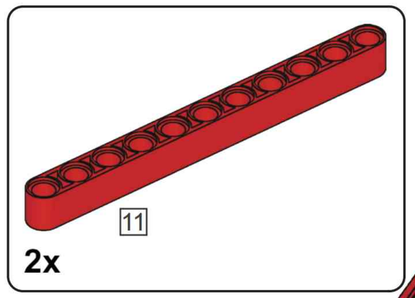

S32

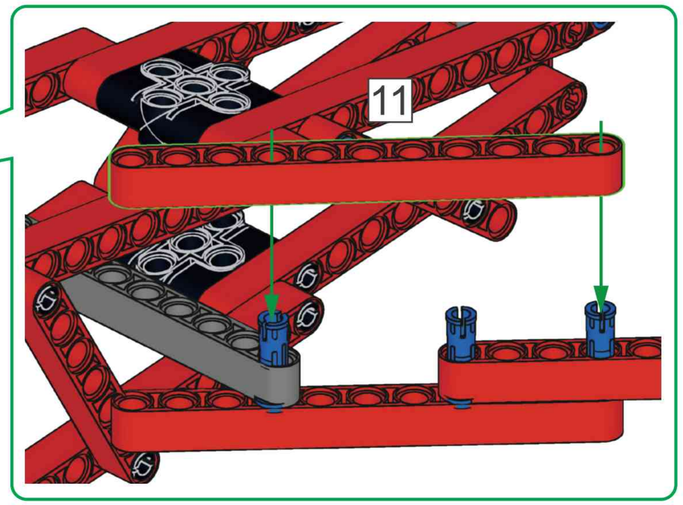

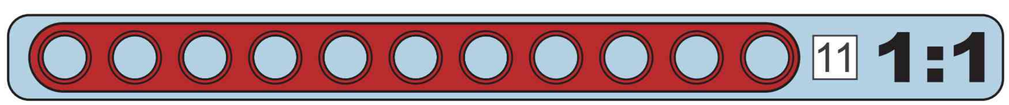

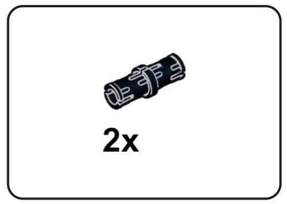

S33



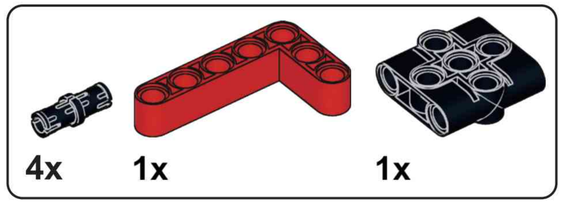

S34

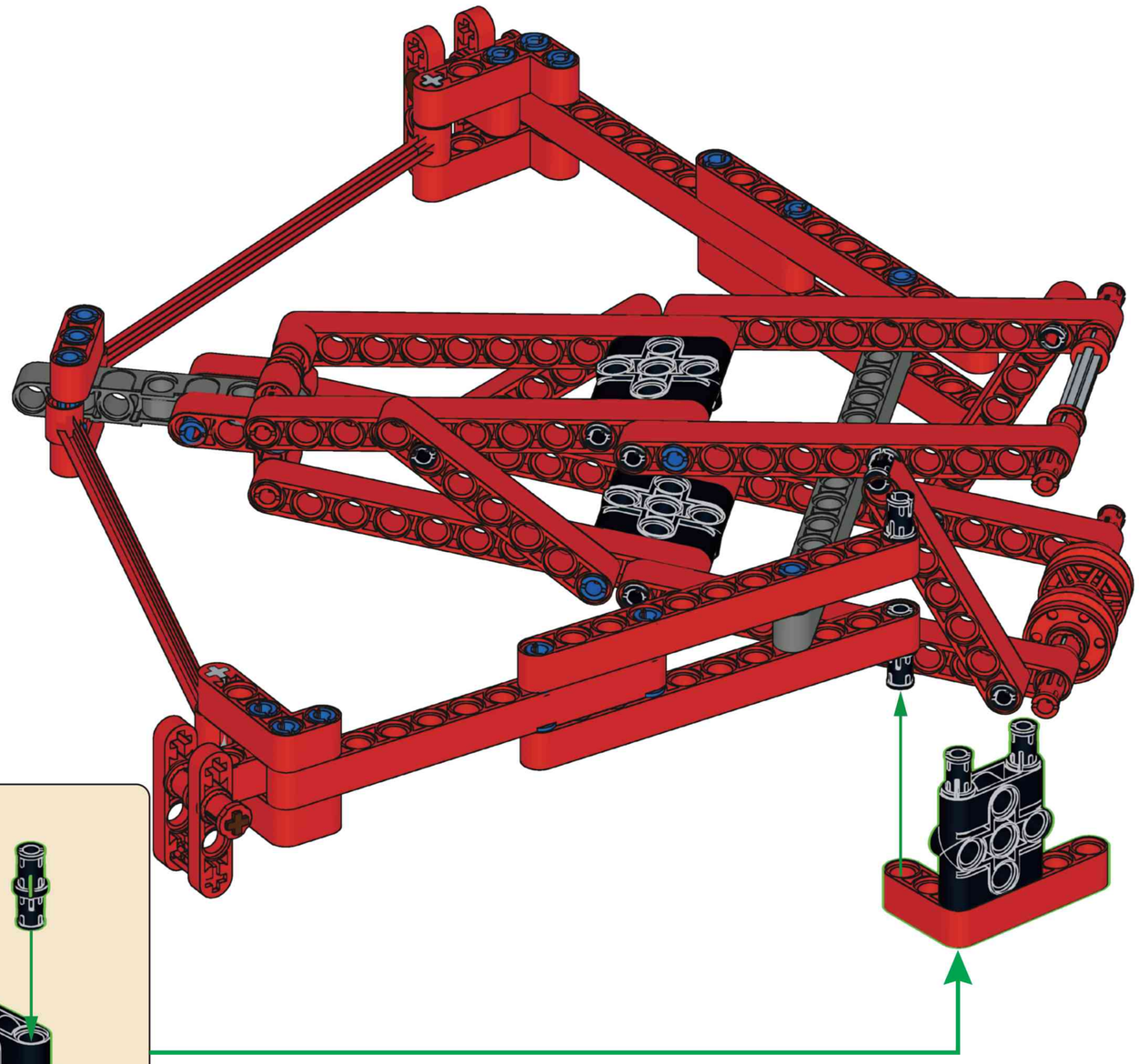

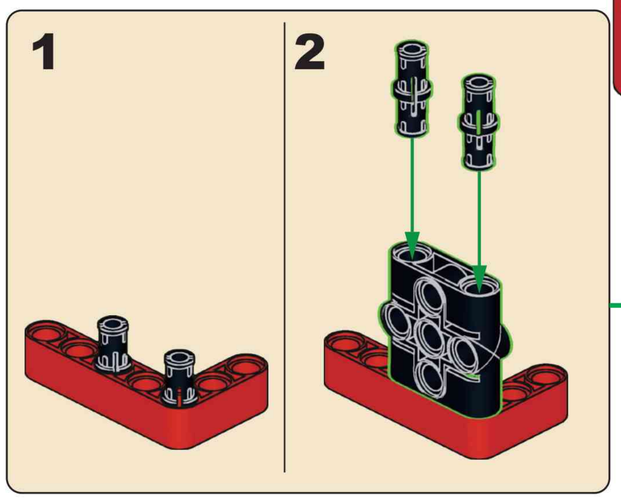

1x

S35

2x

S36

4x 1x 1x

S37

1 2

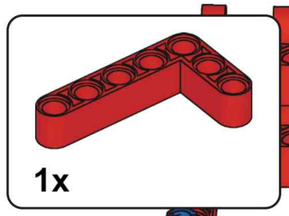

S38

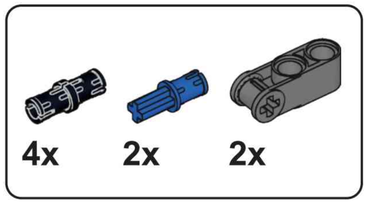

S39

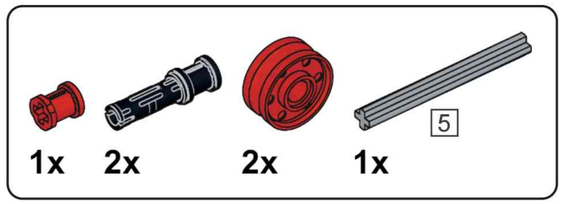

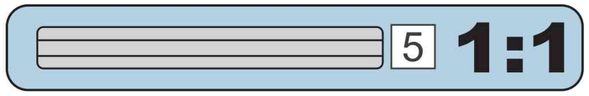

S40

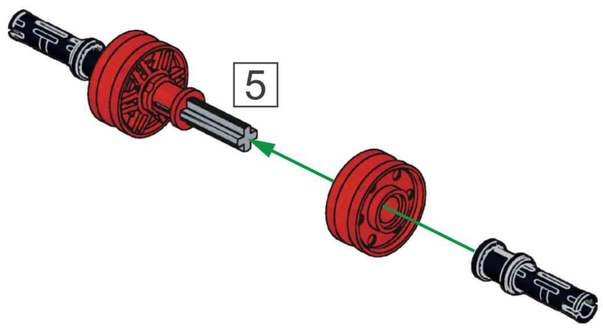

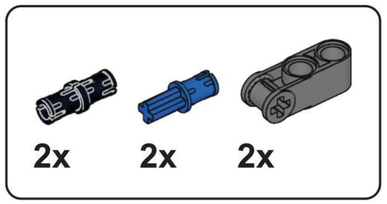

S41

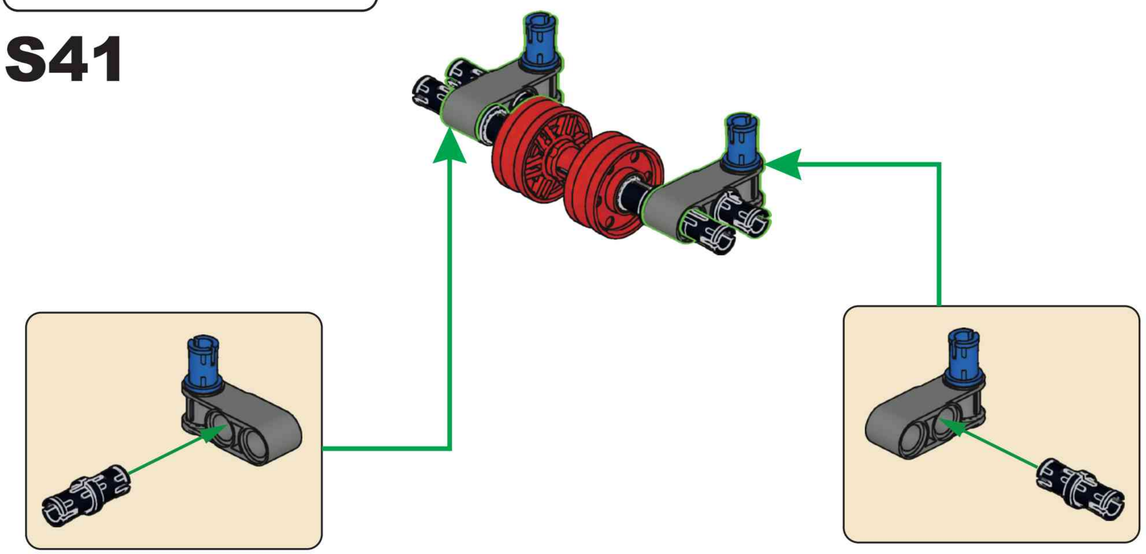

S42

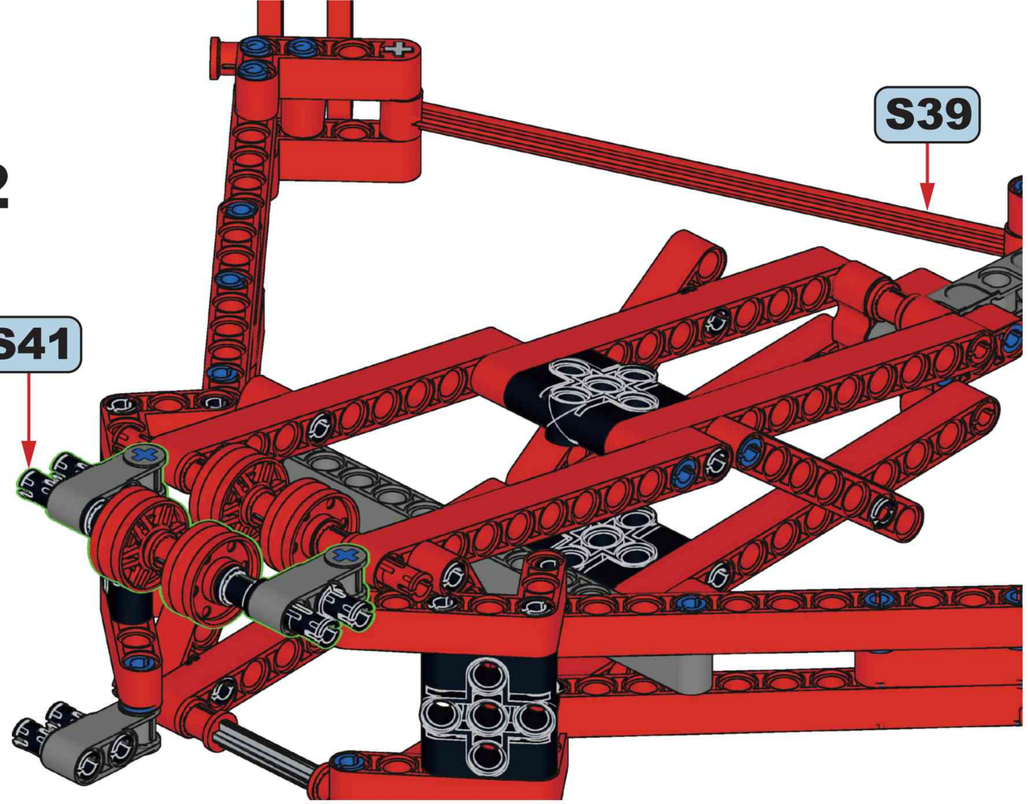

S43

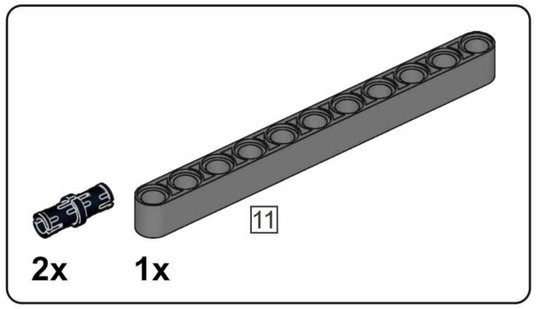

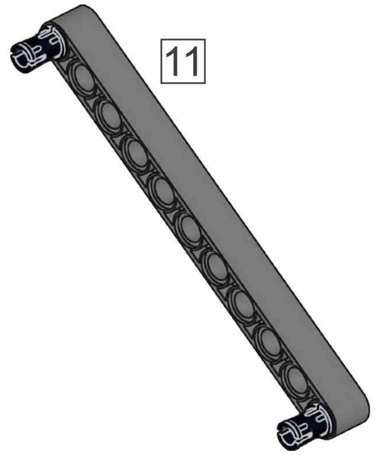

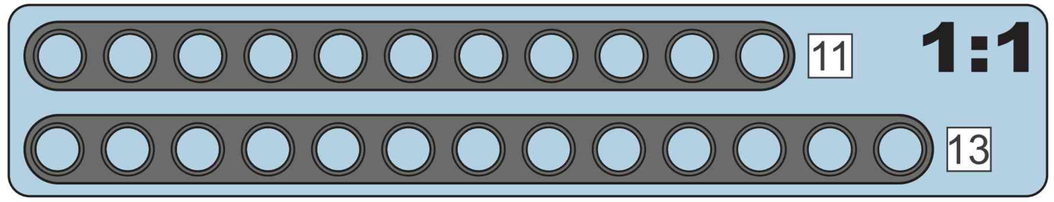

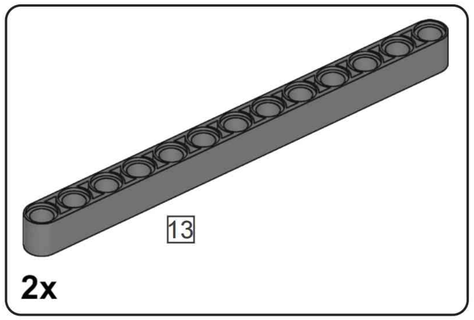

S44

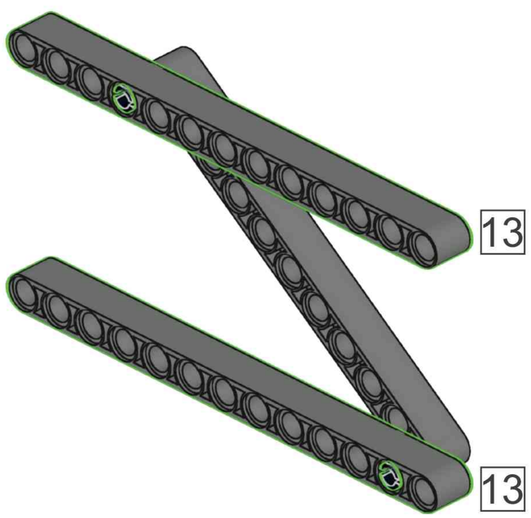

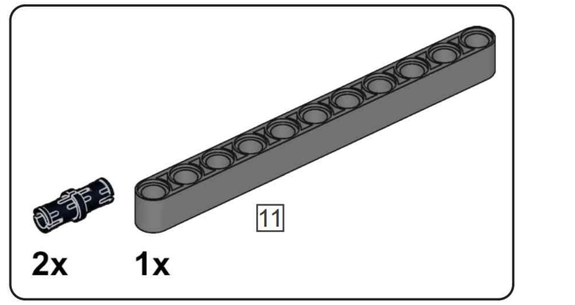

S45

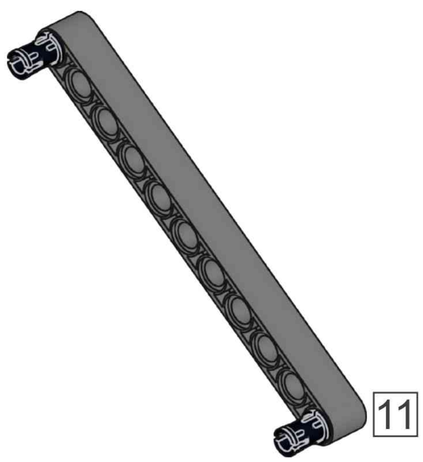

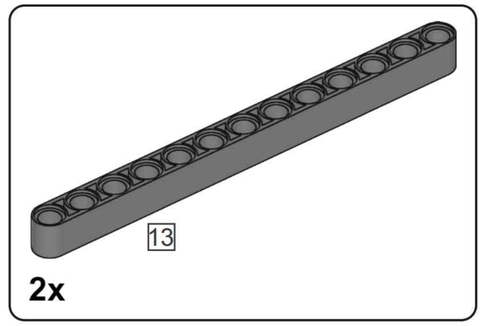

S46

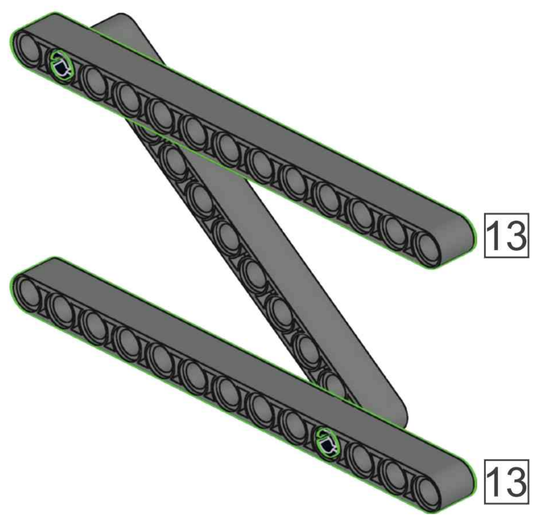

S47



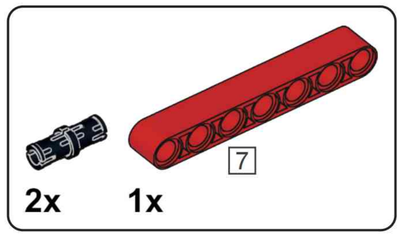

S48

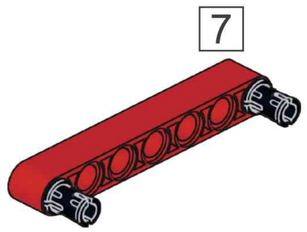

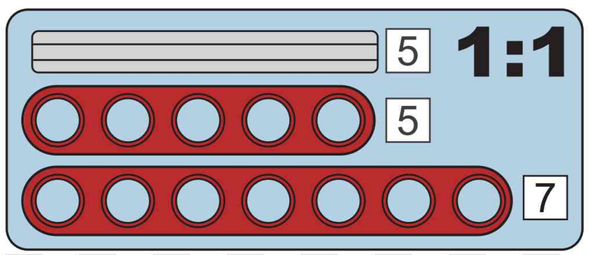

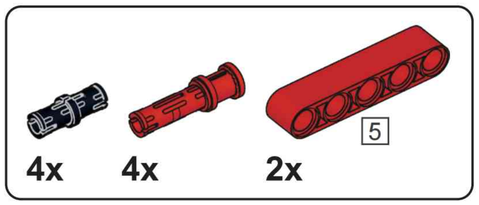

S49

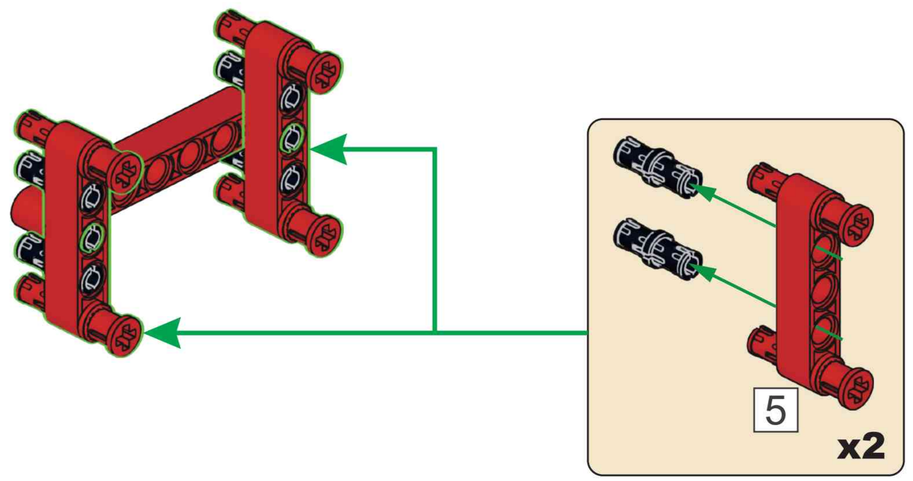

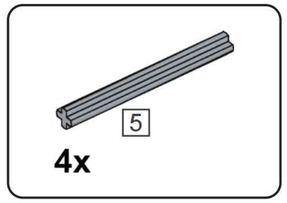

S50

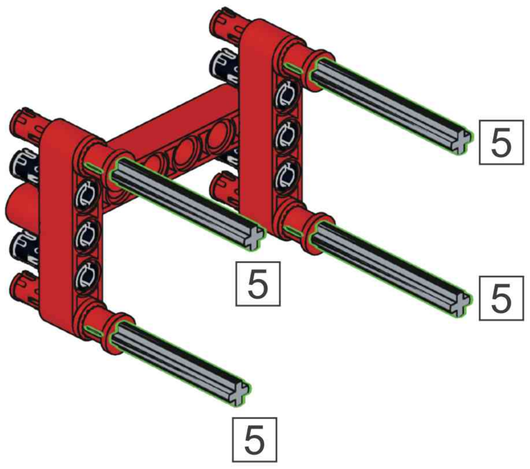

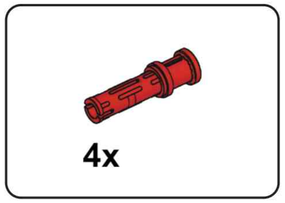

S51

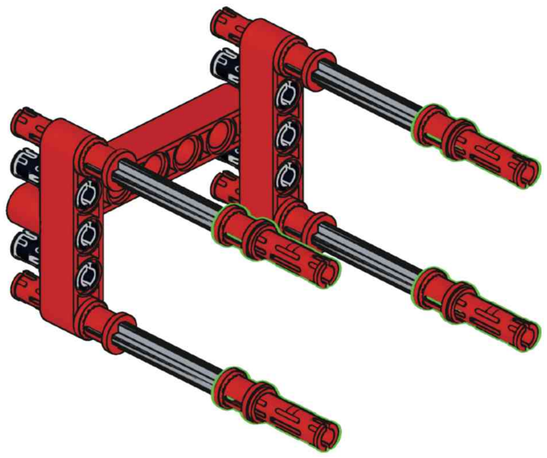

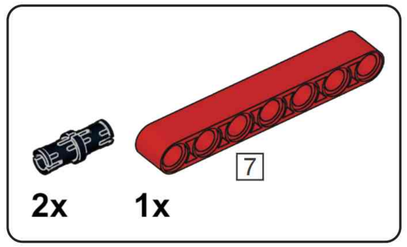

S52

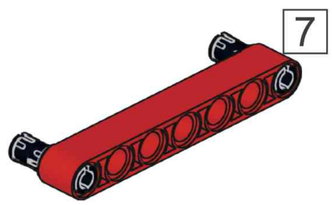

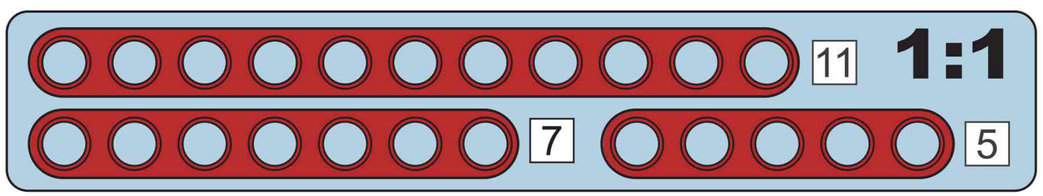

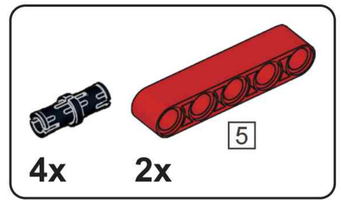

S53

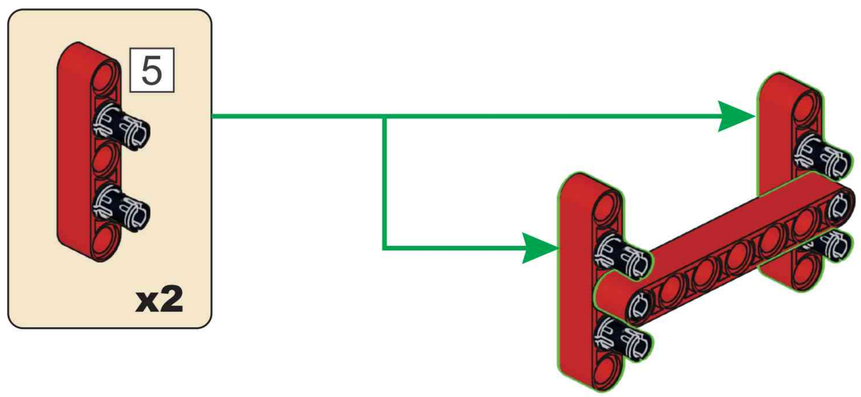

S54

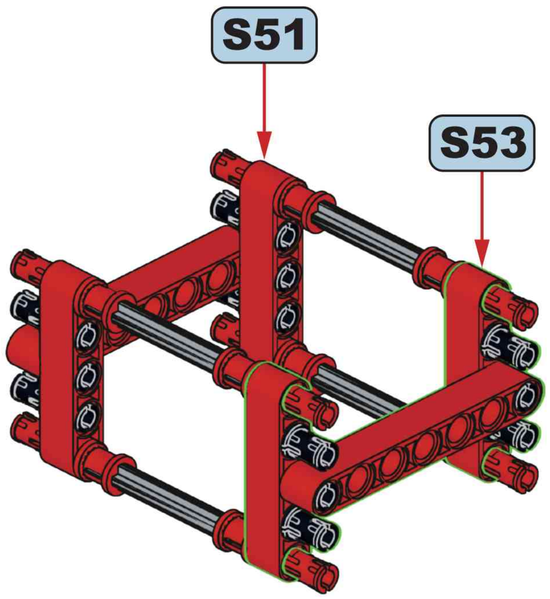

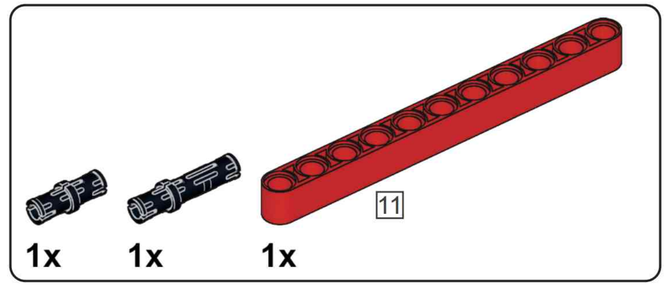

S55

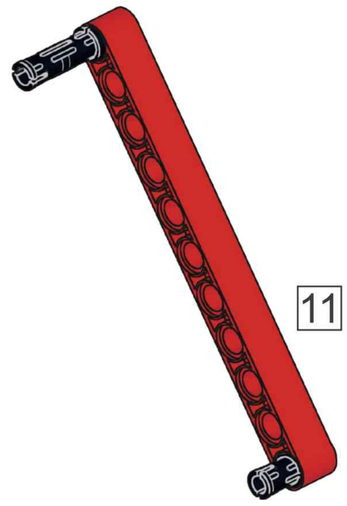

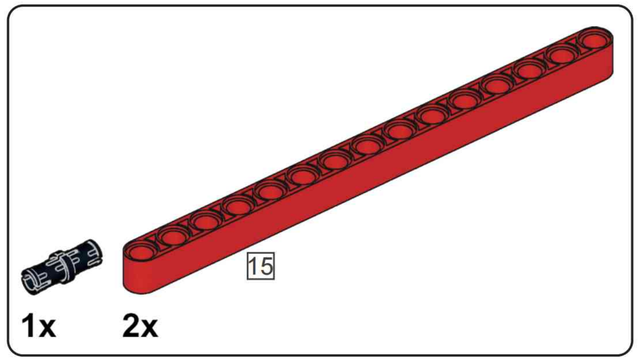

S56

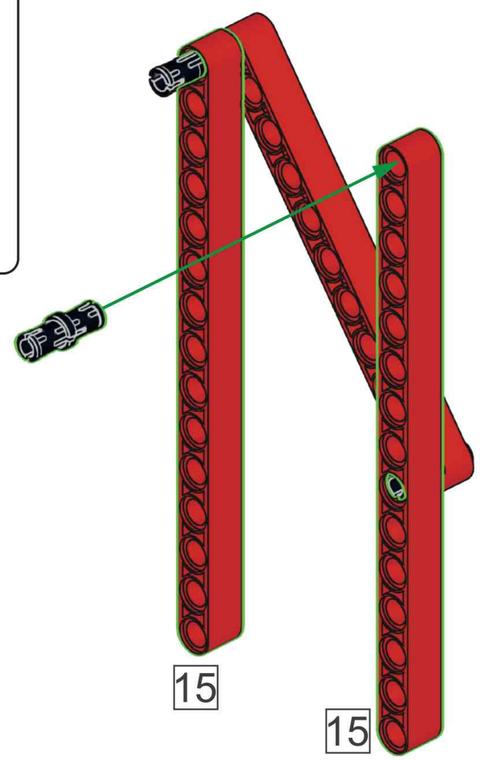

S57

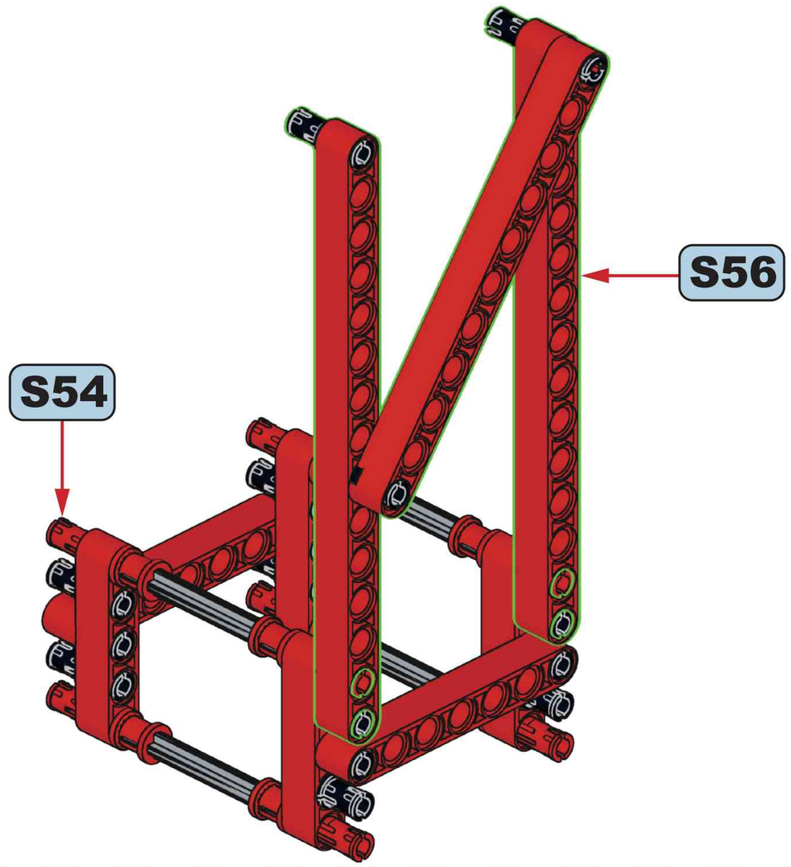

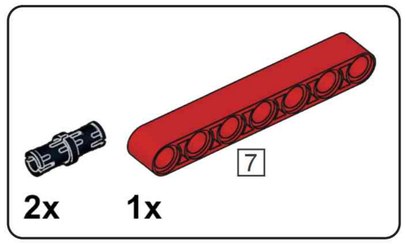

S58

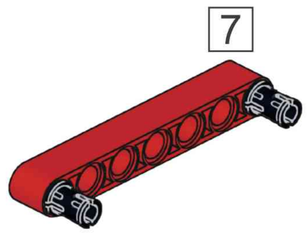

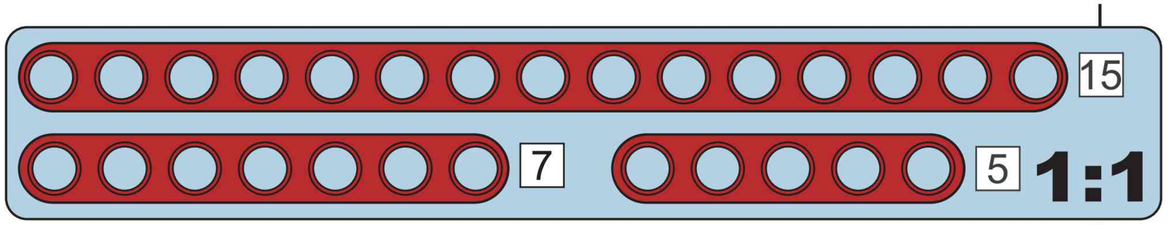

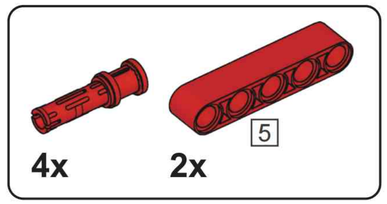

S59

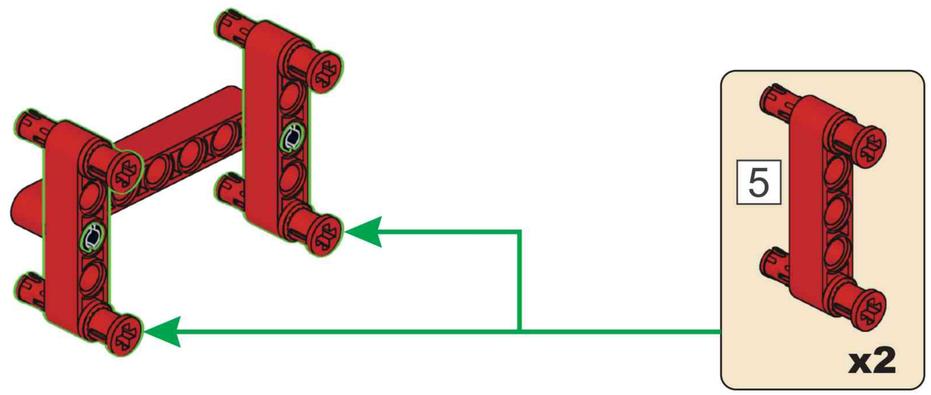

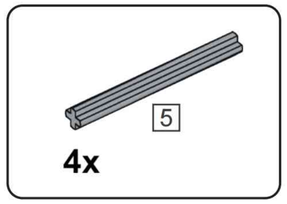

S60

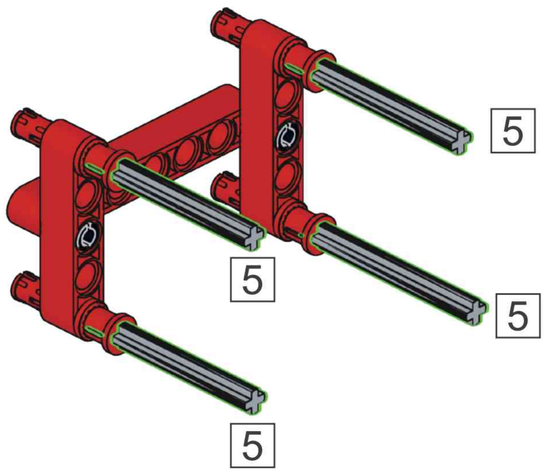

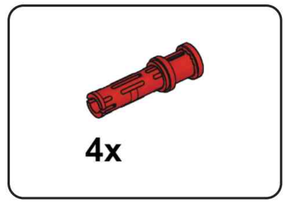

S61

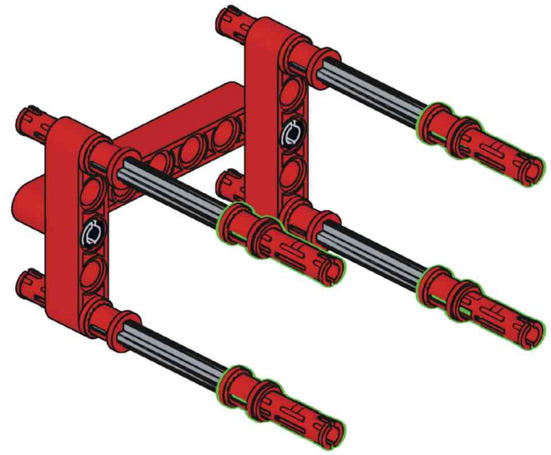

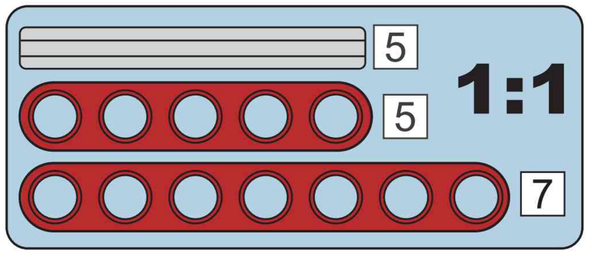

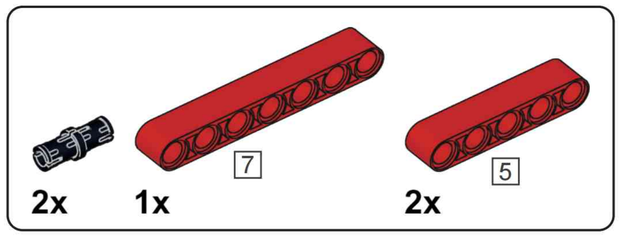

S62

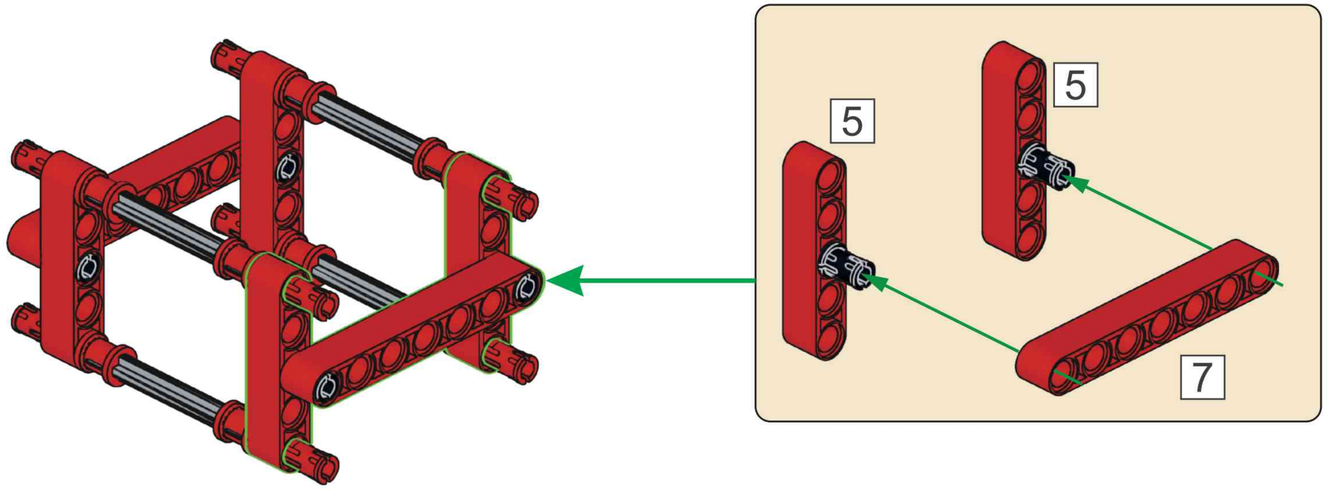

S63

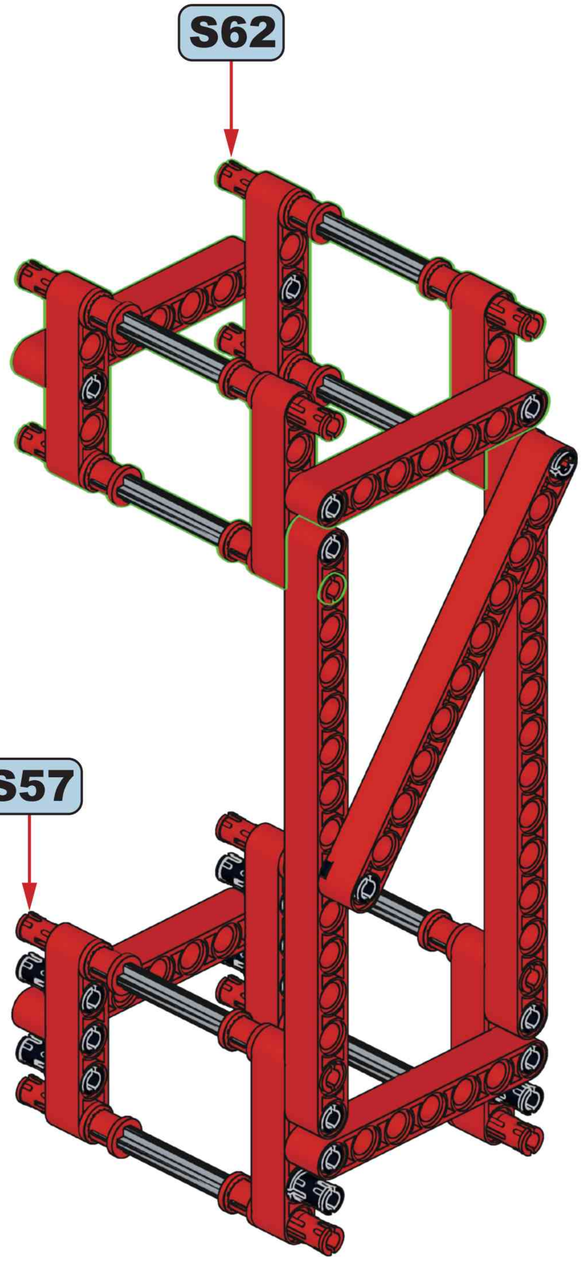

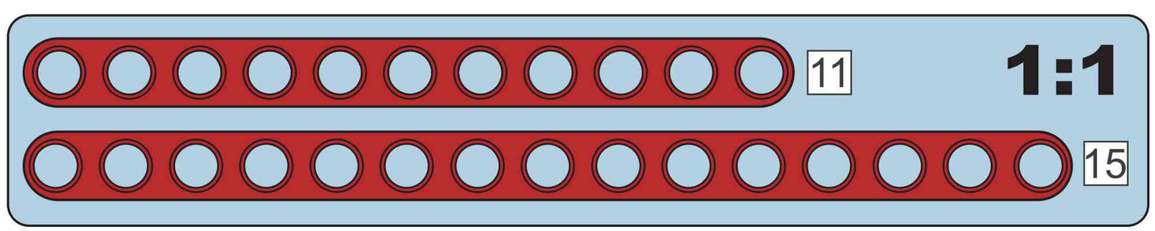

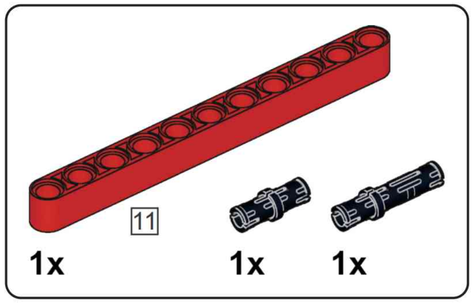

S64

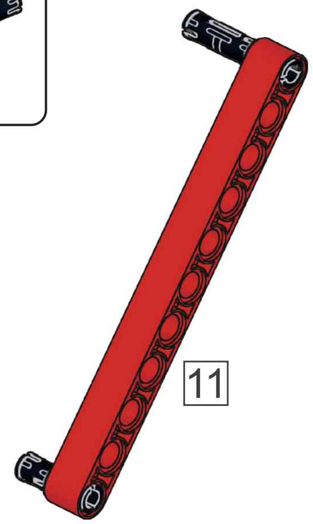

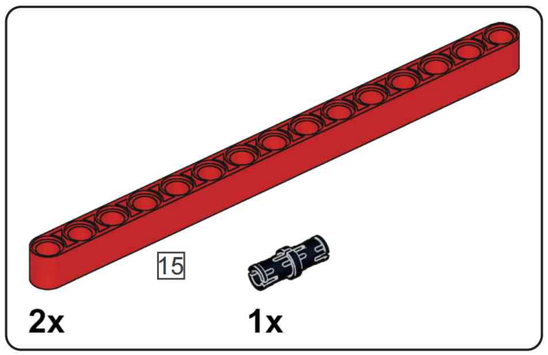

S65

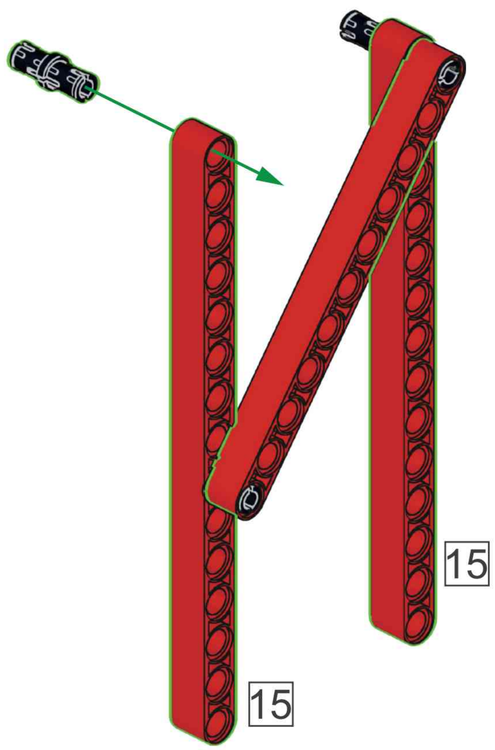

S66

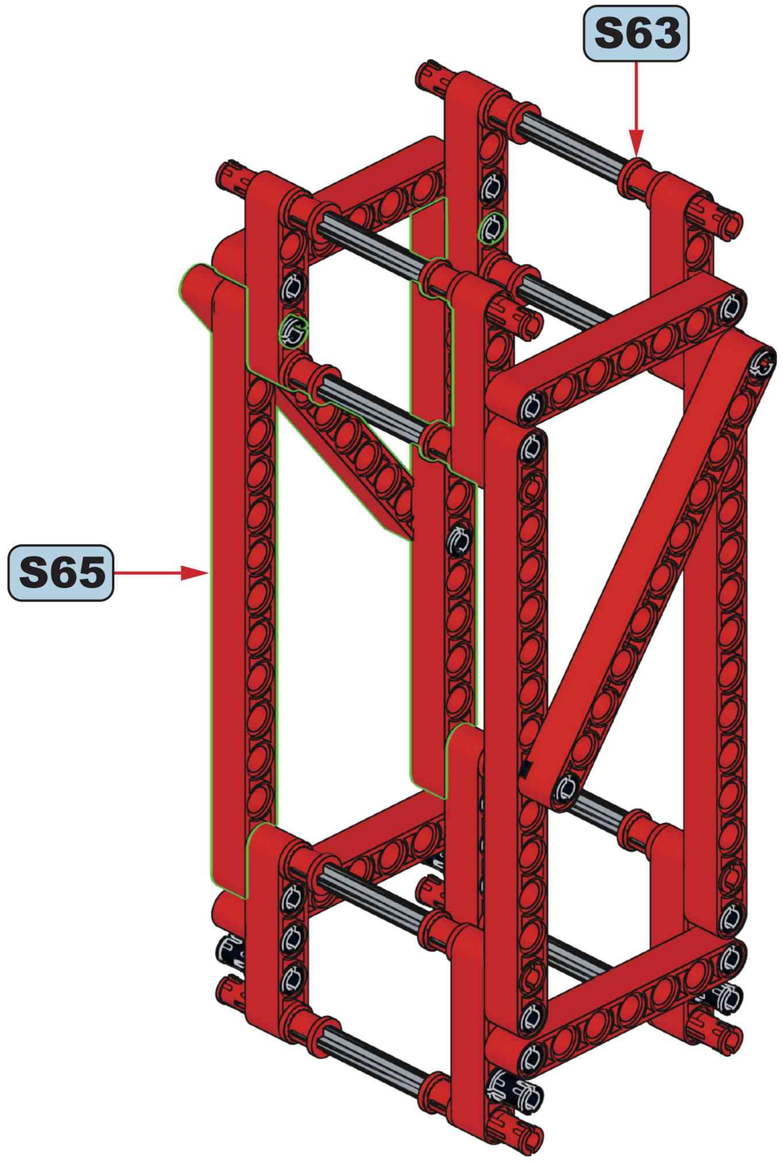

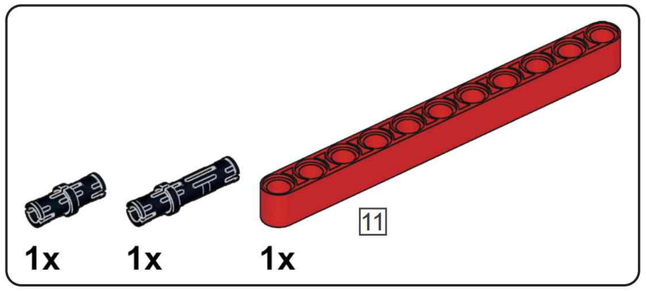

S67

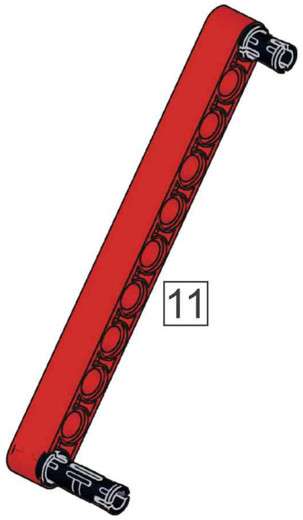

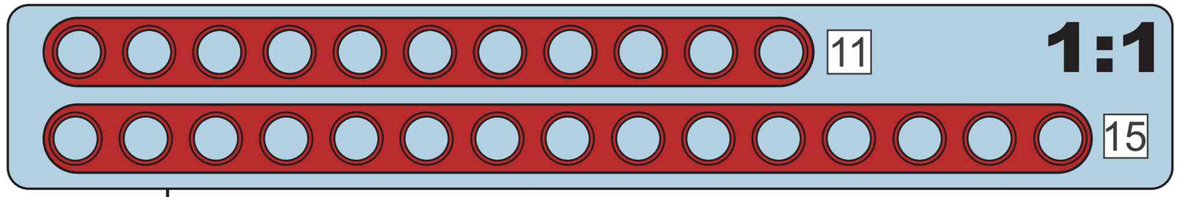

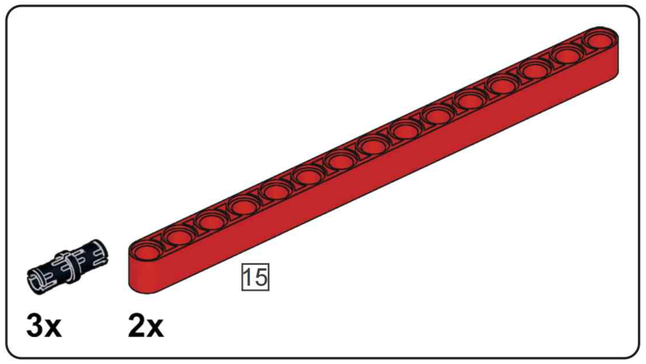

S68

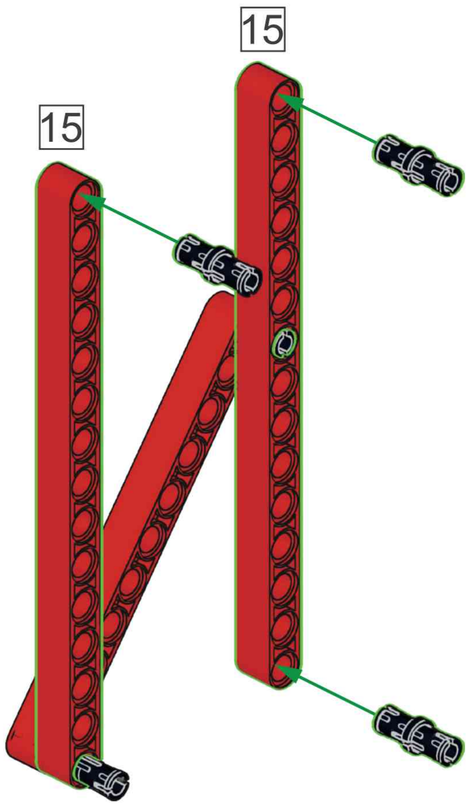

S69

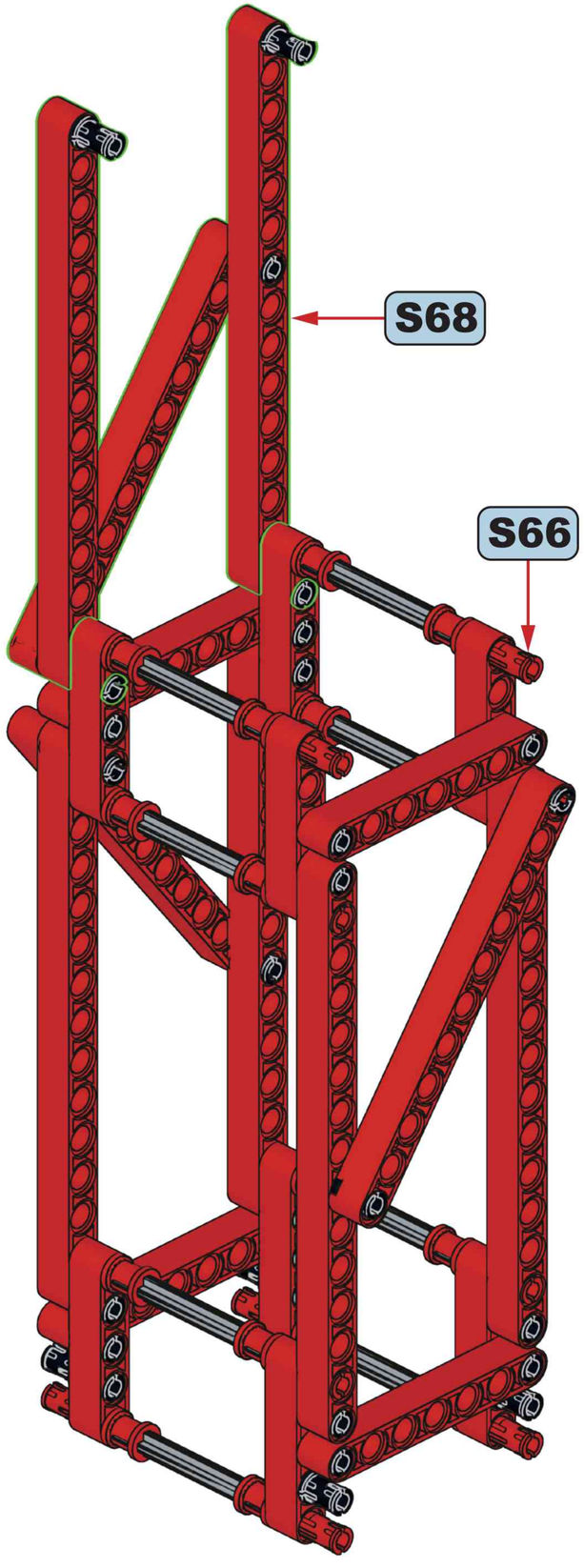

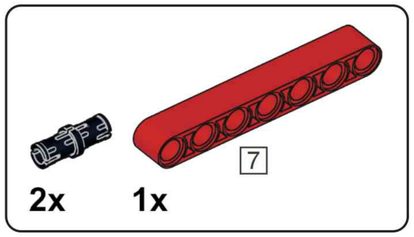

S70

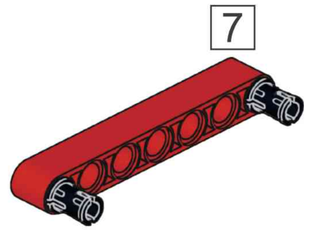

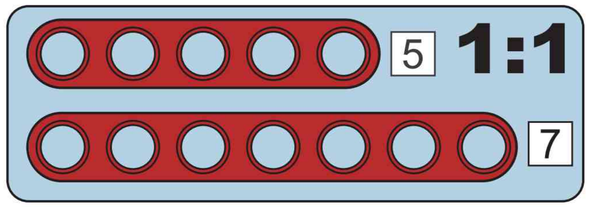

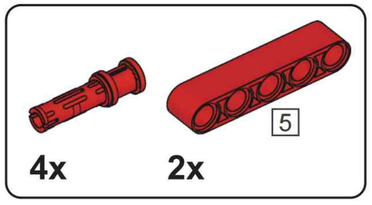

S71

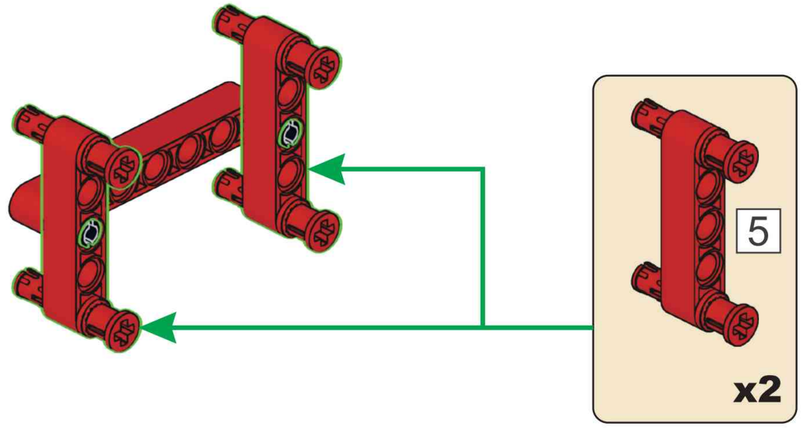

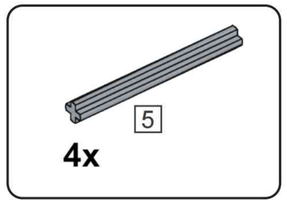

S72

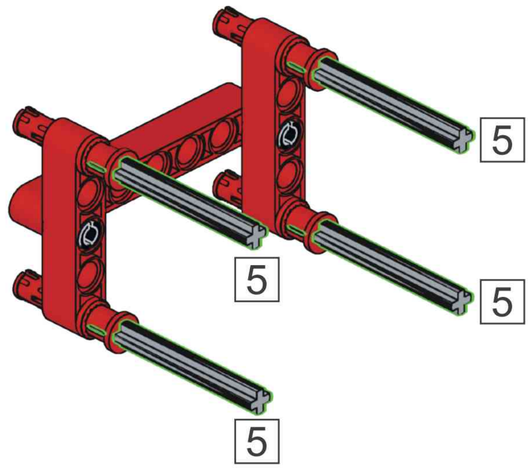

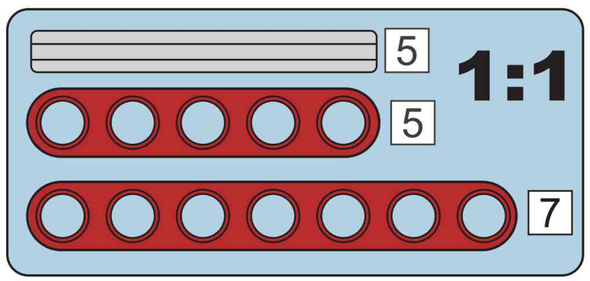

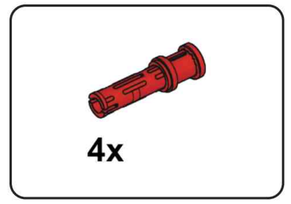

S73

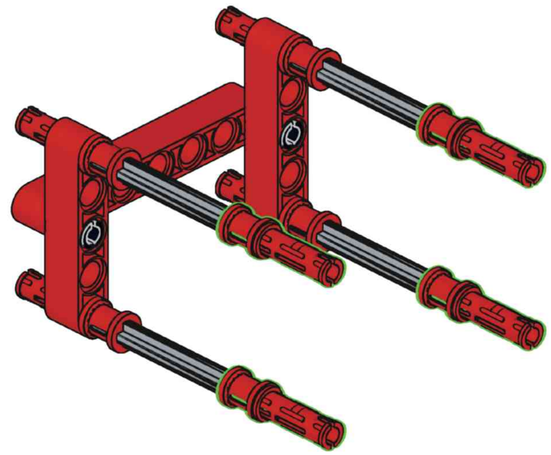

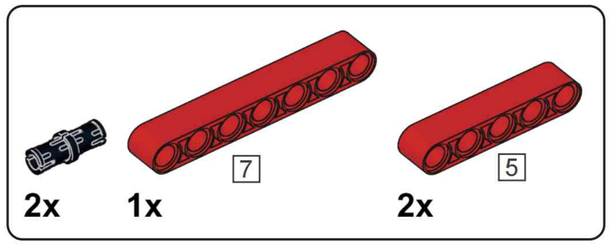

S74

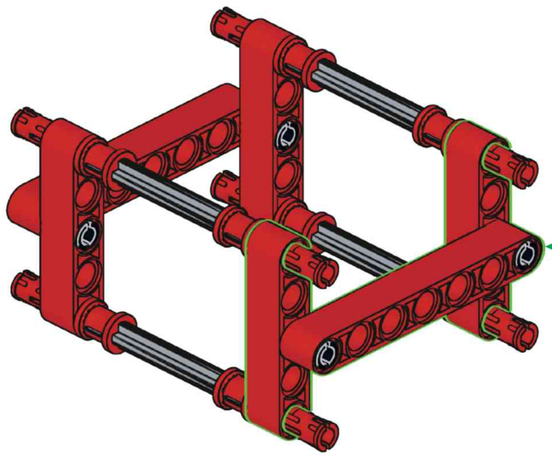

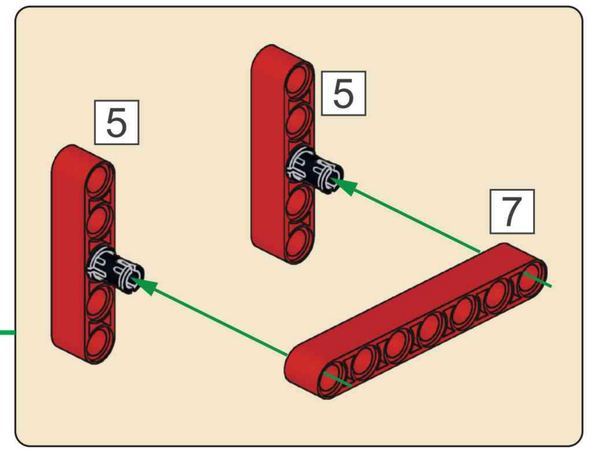

S75

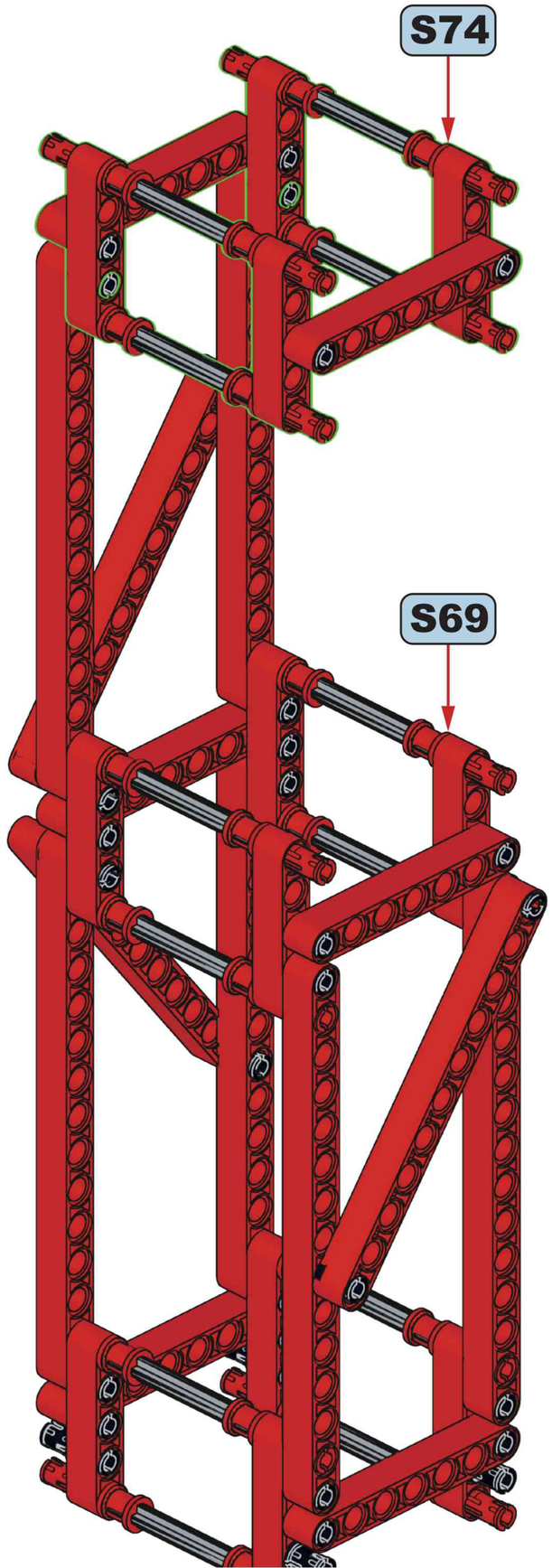

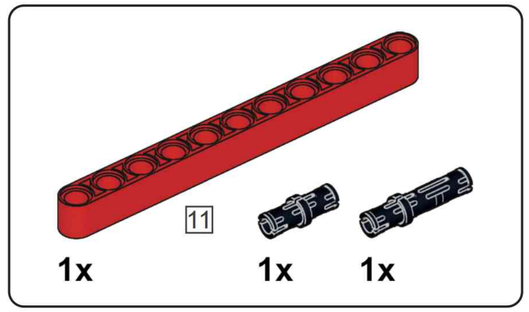

S76

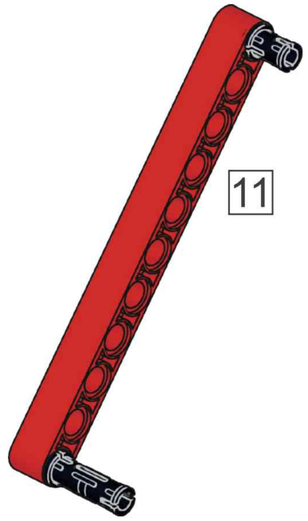

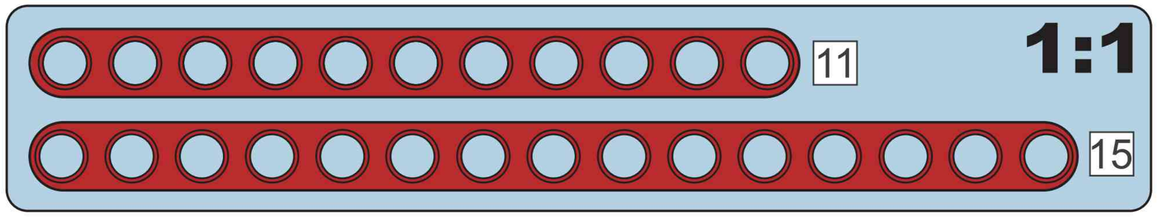

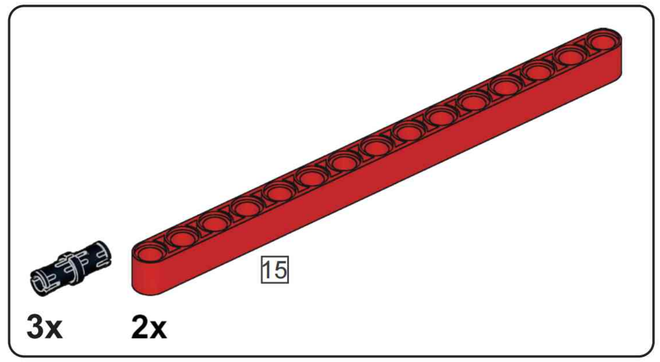

S77

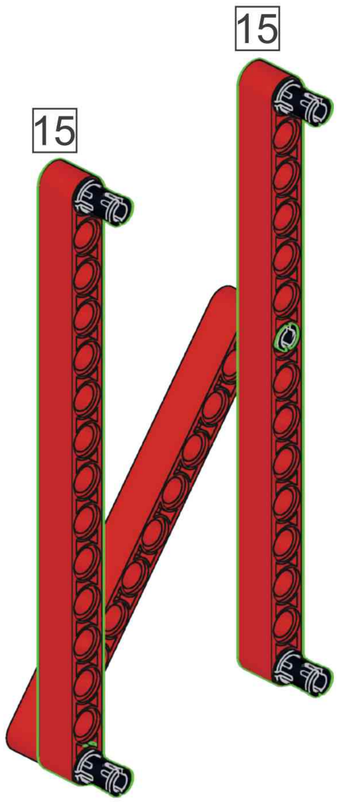

S78

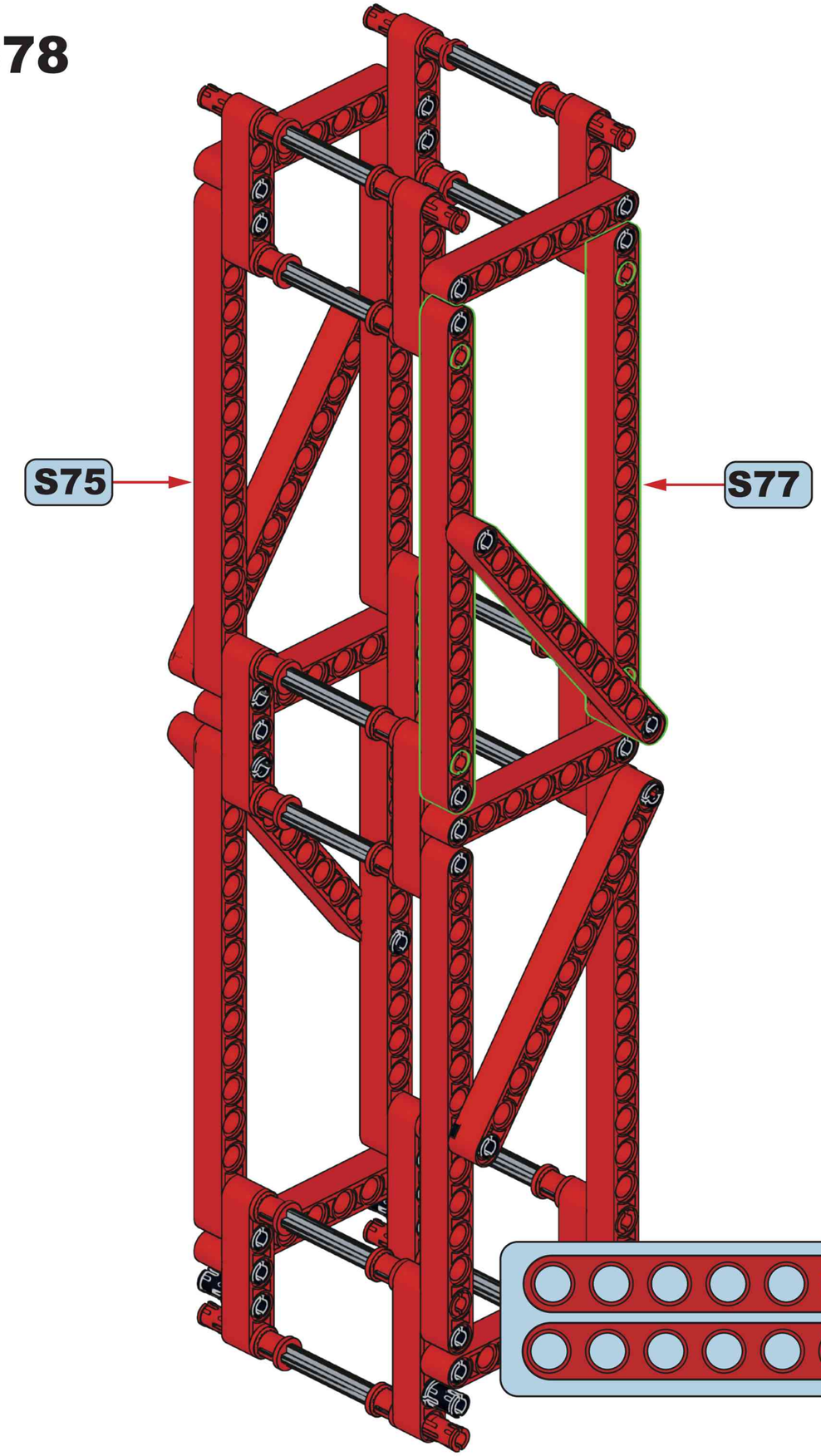

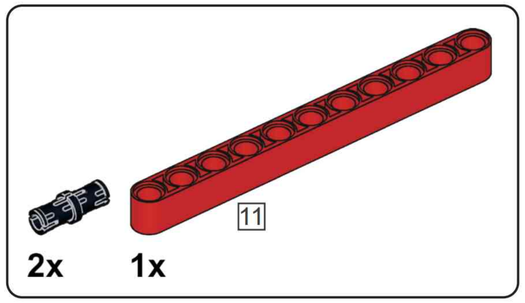

S79

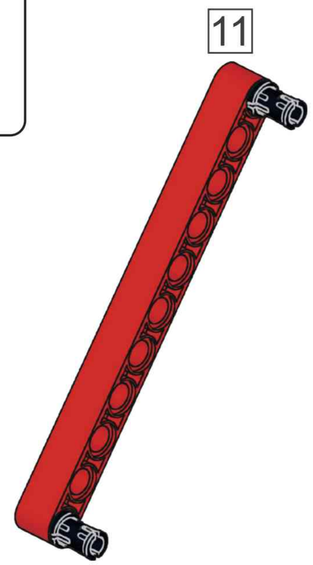

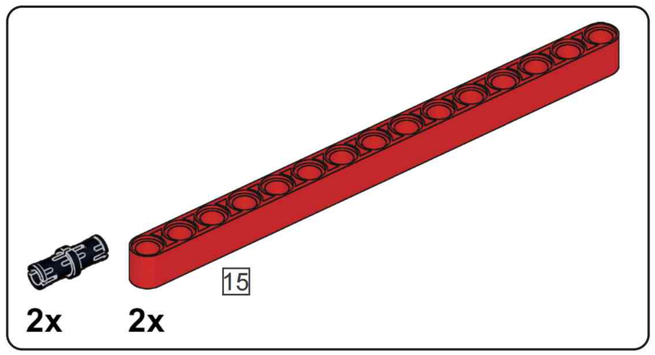

S80

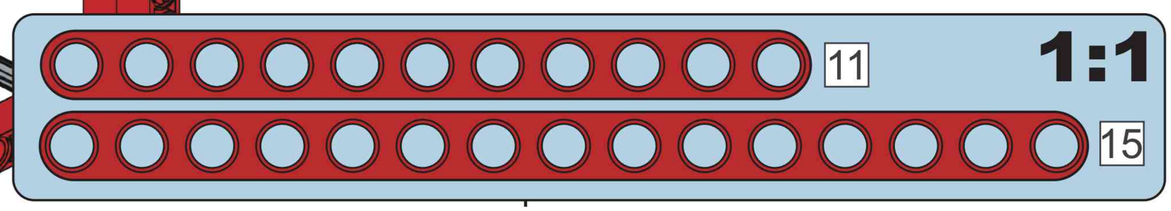

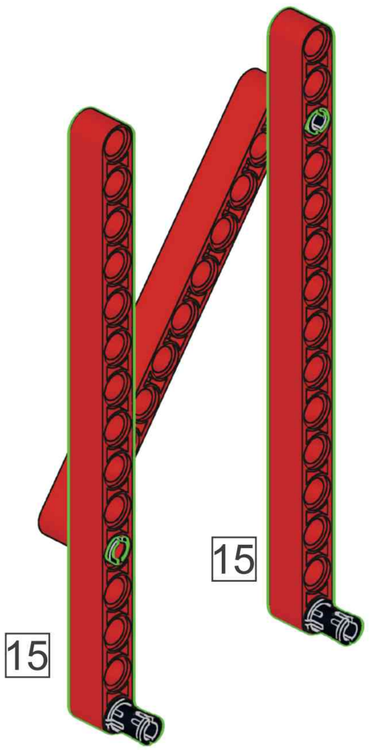

S81

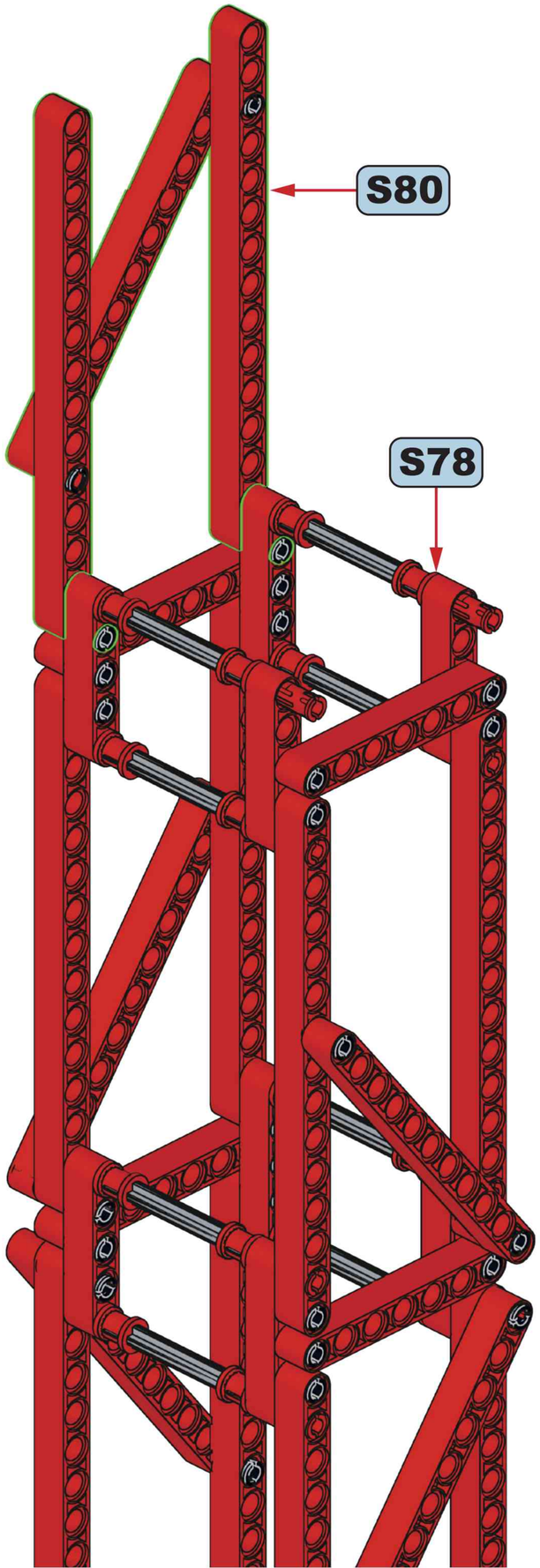

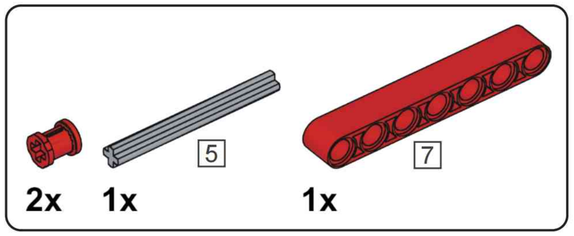

S82

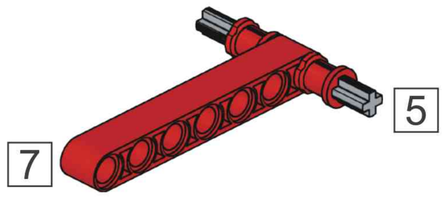

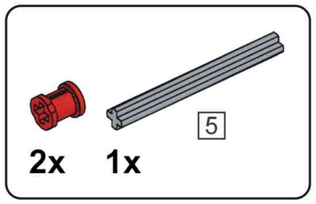

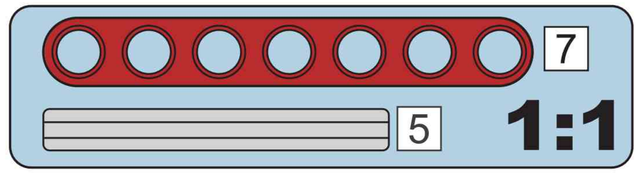

S83

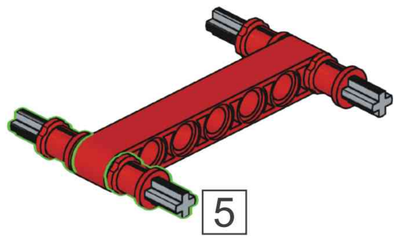

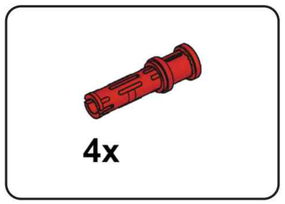

S84

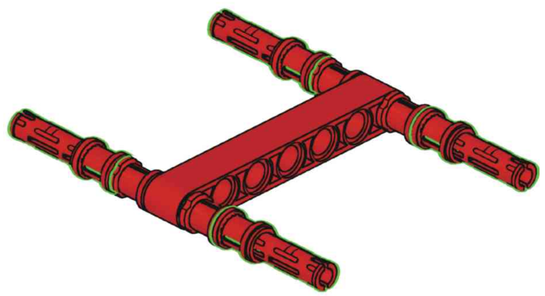

1x 1x

S85

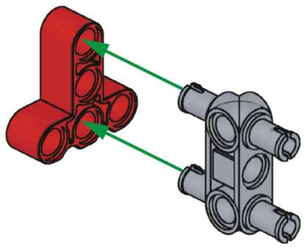

1x

S86

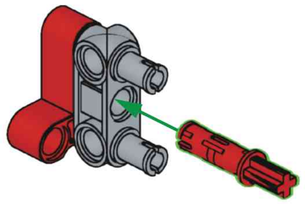

1x

S87

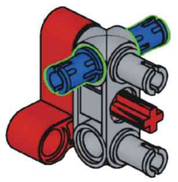

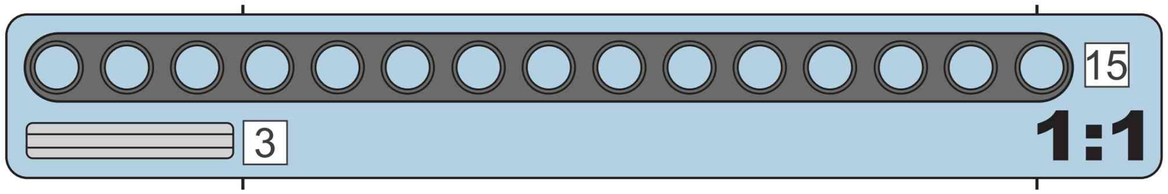

2x 2x

S88

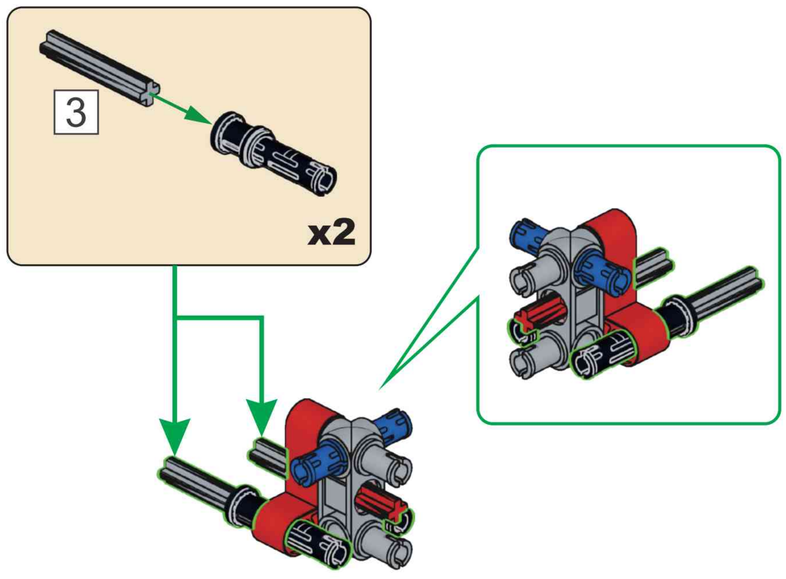

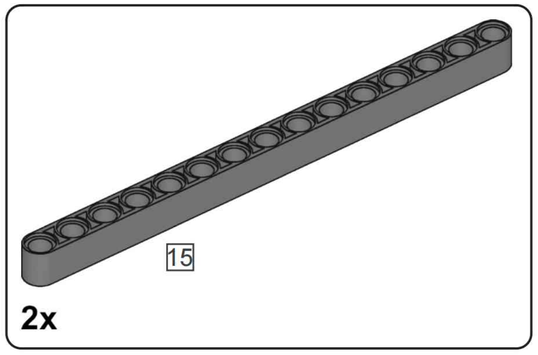

2x

S89

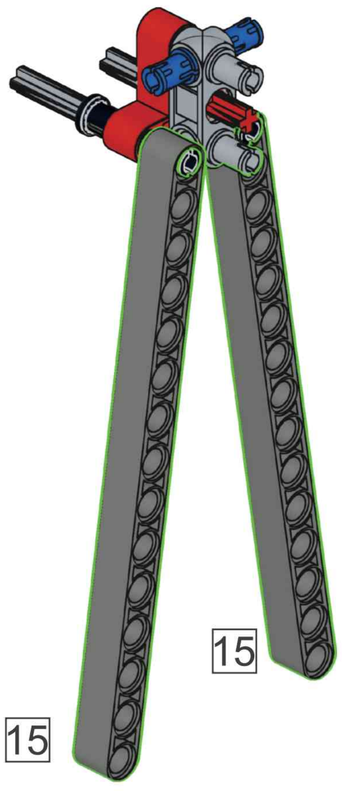

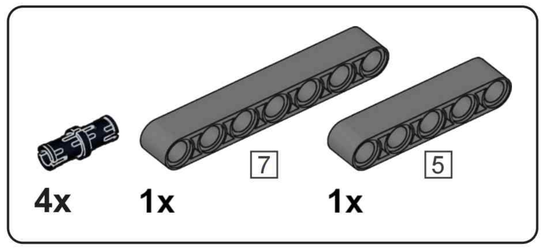

S90

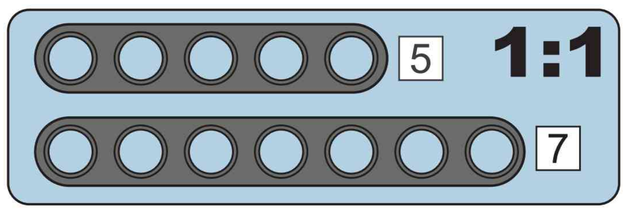

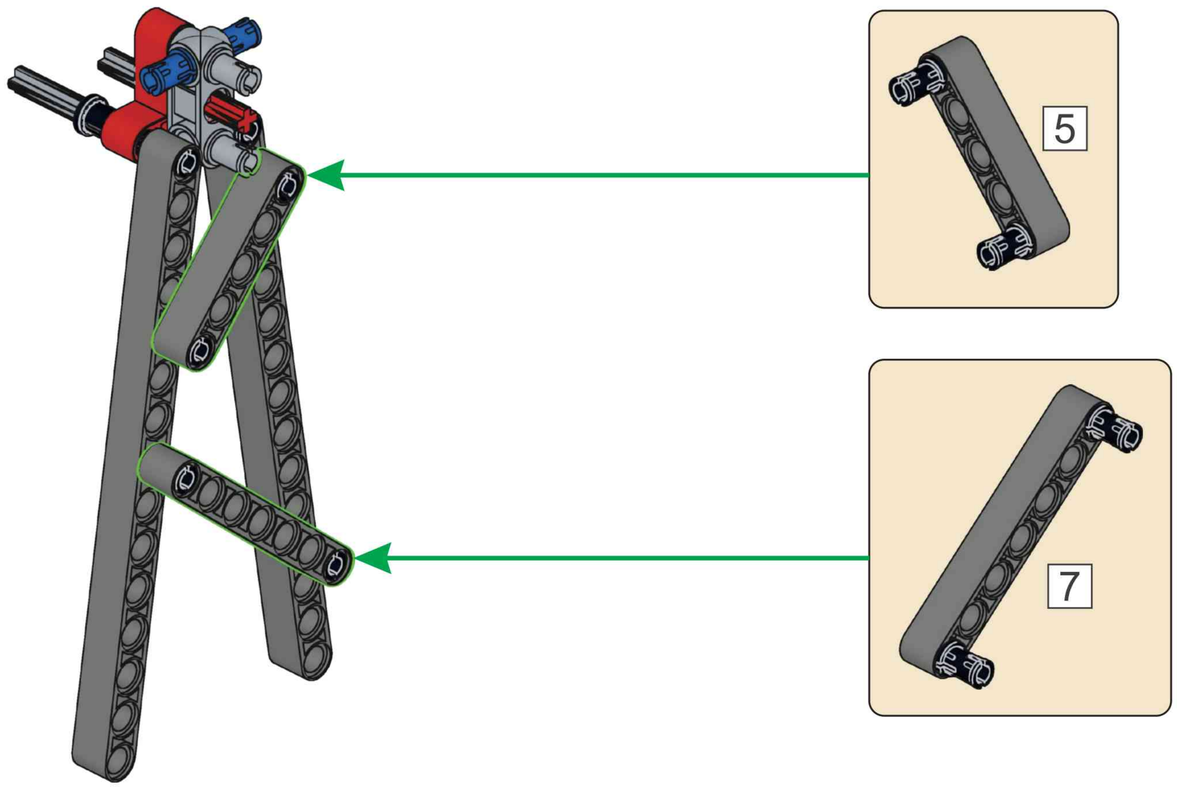

S91

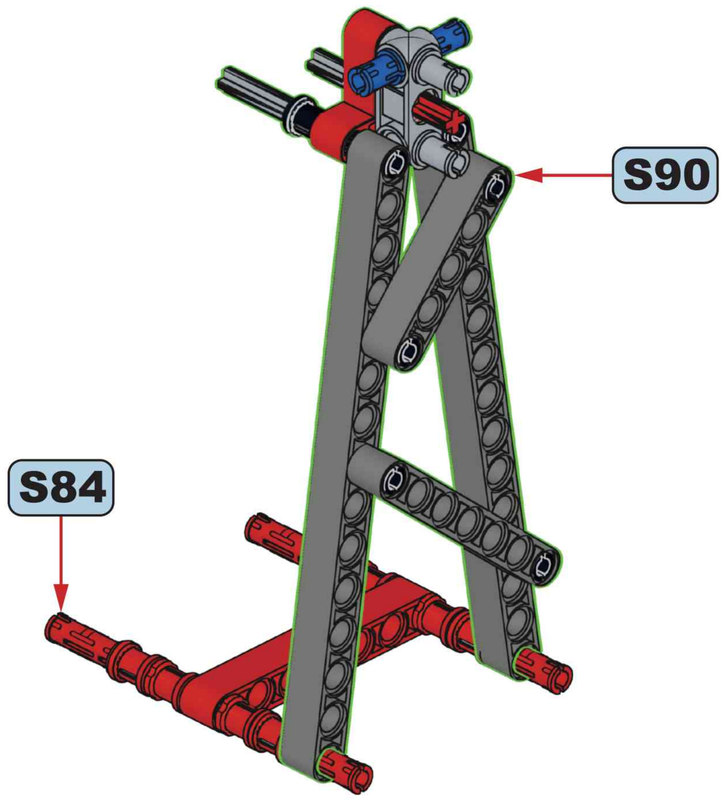

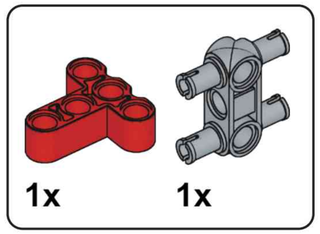

S92

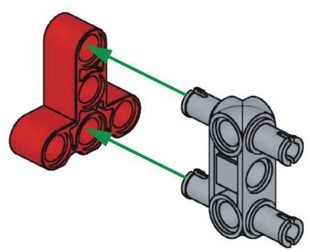

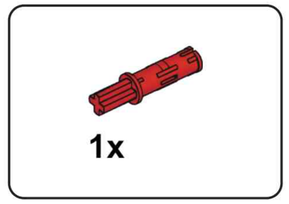

S93

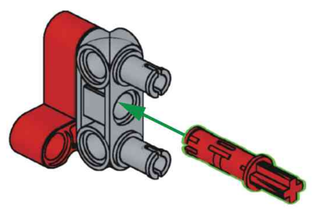

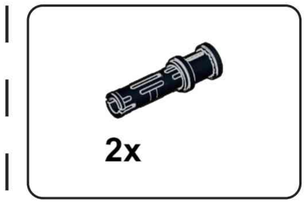

S94

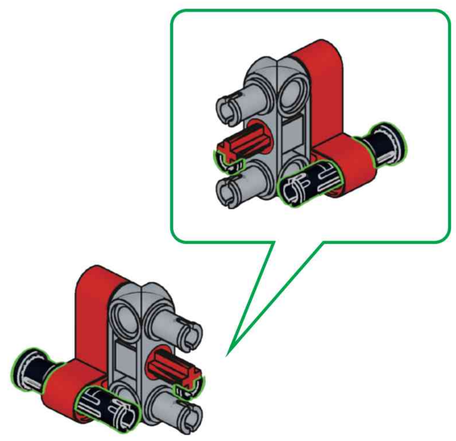

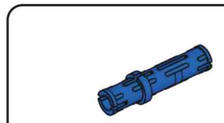

S95

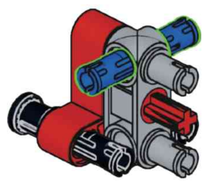

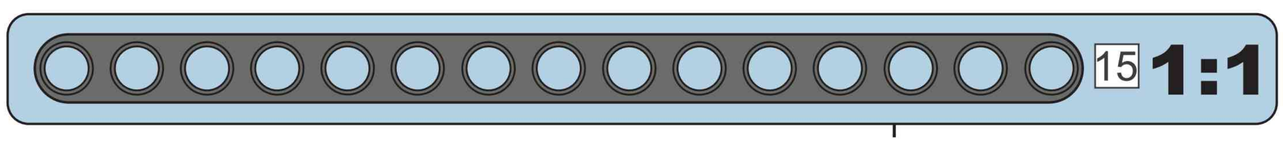

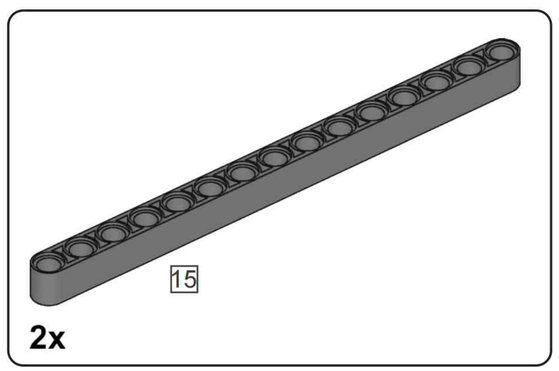

S96

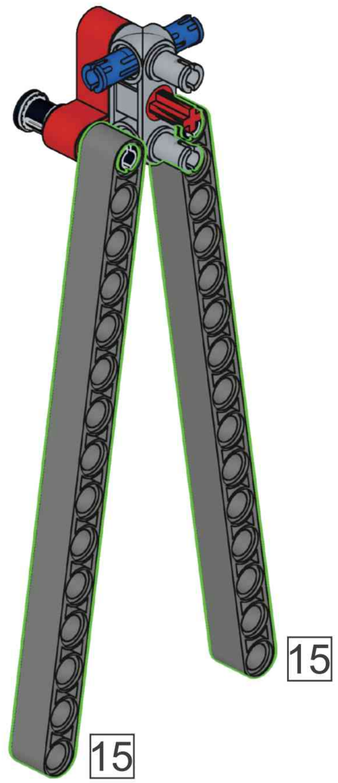

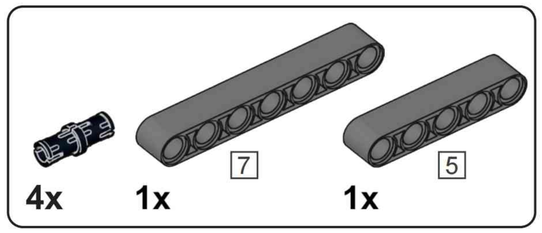

S97

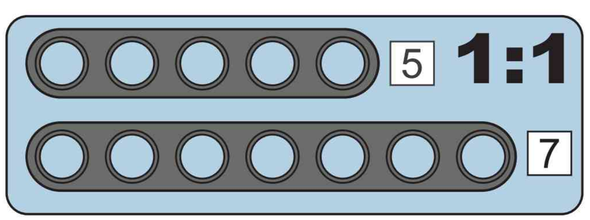

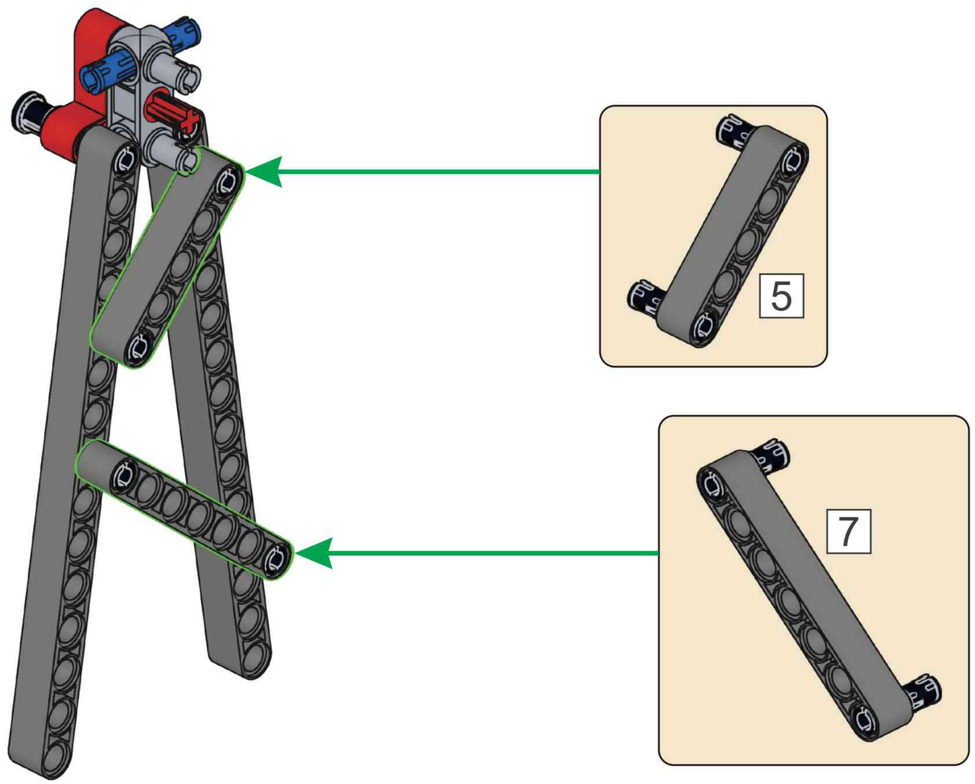

S98

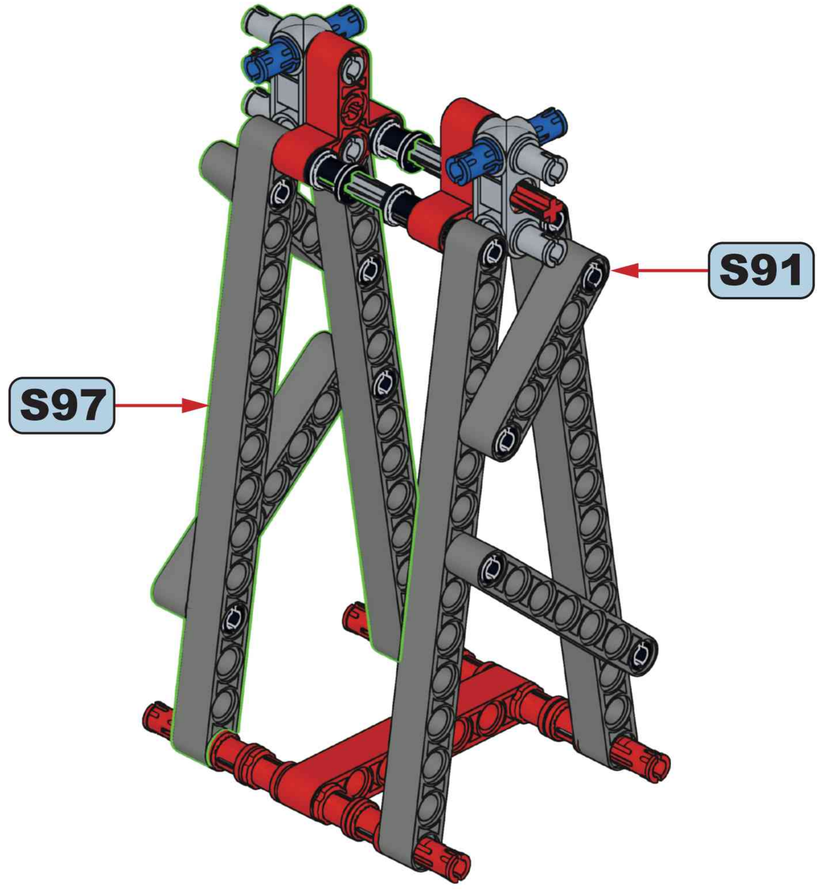

S99

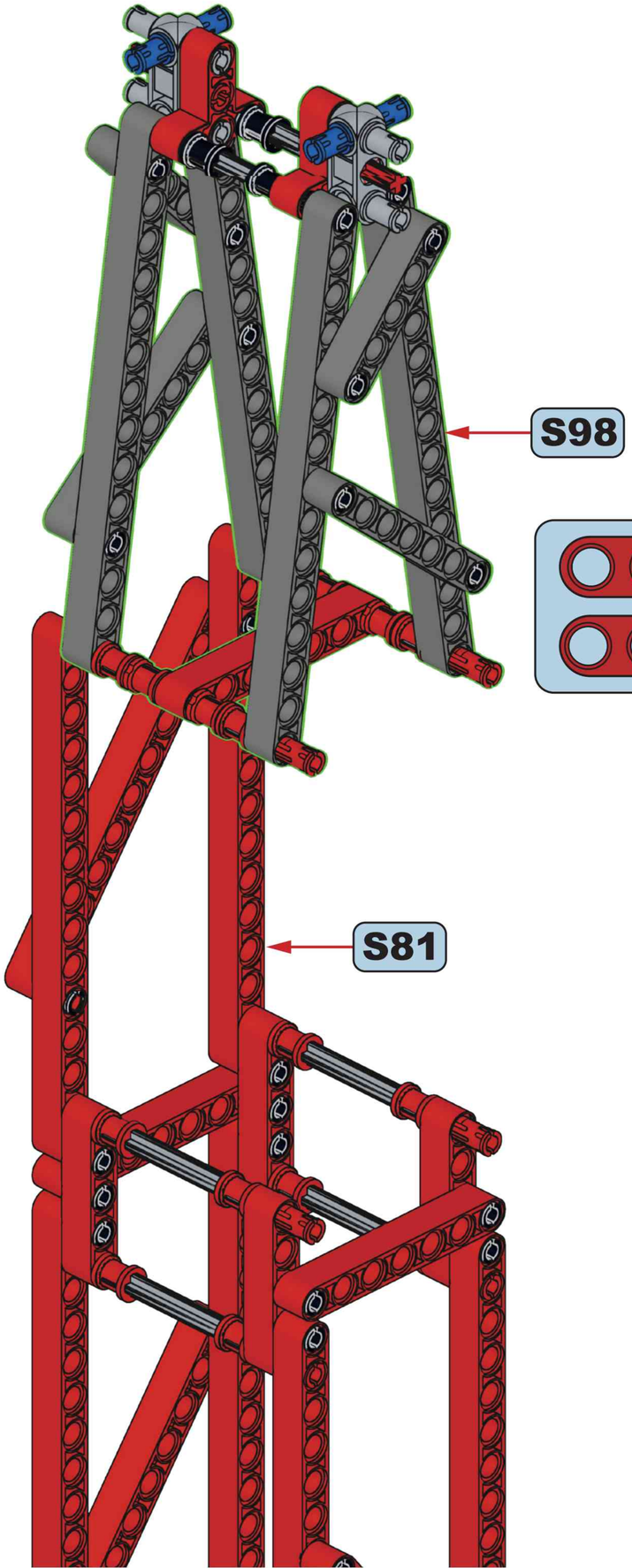

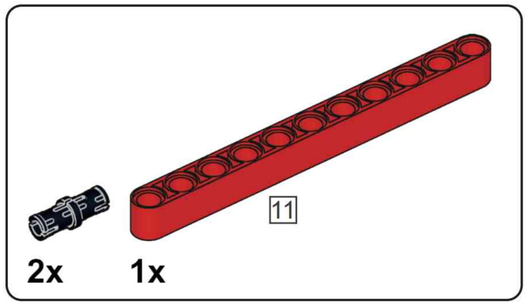

S100

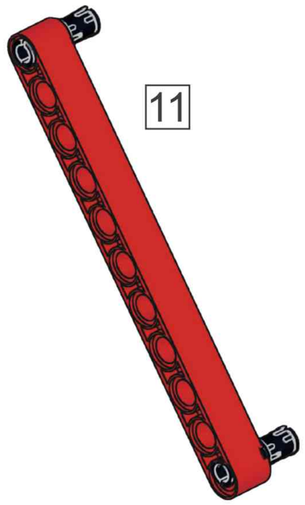

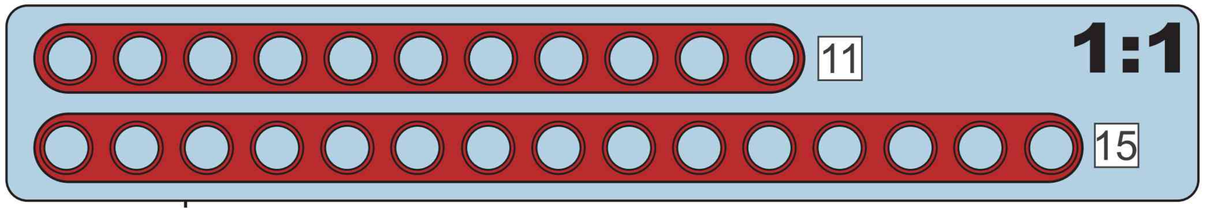

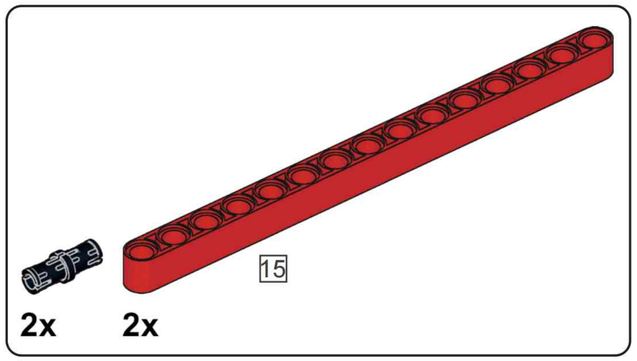

S101

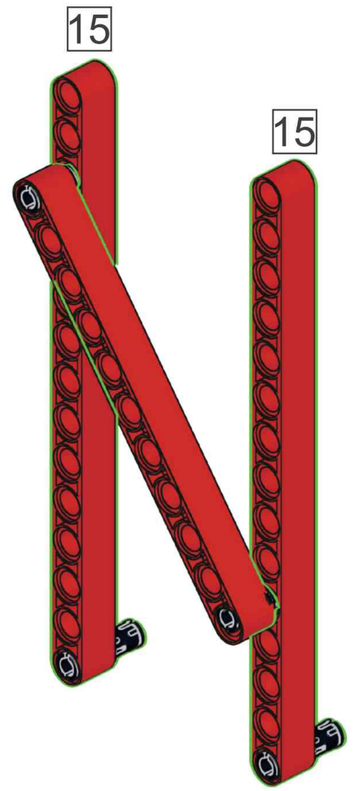

S102

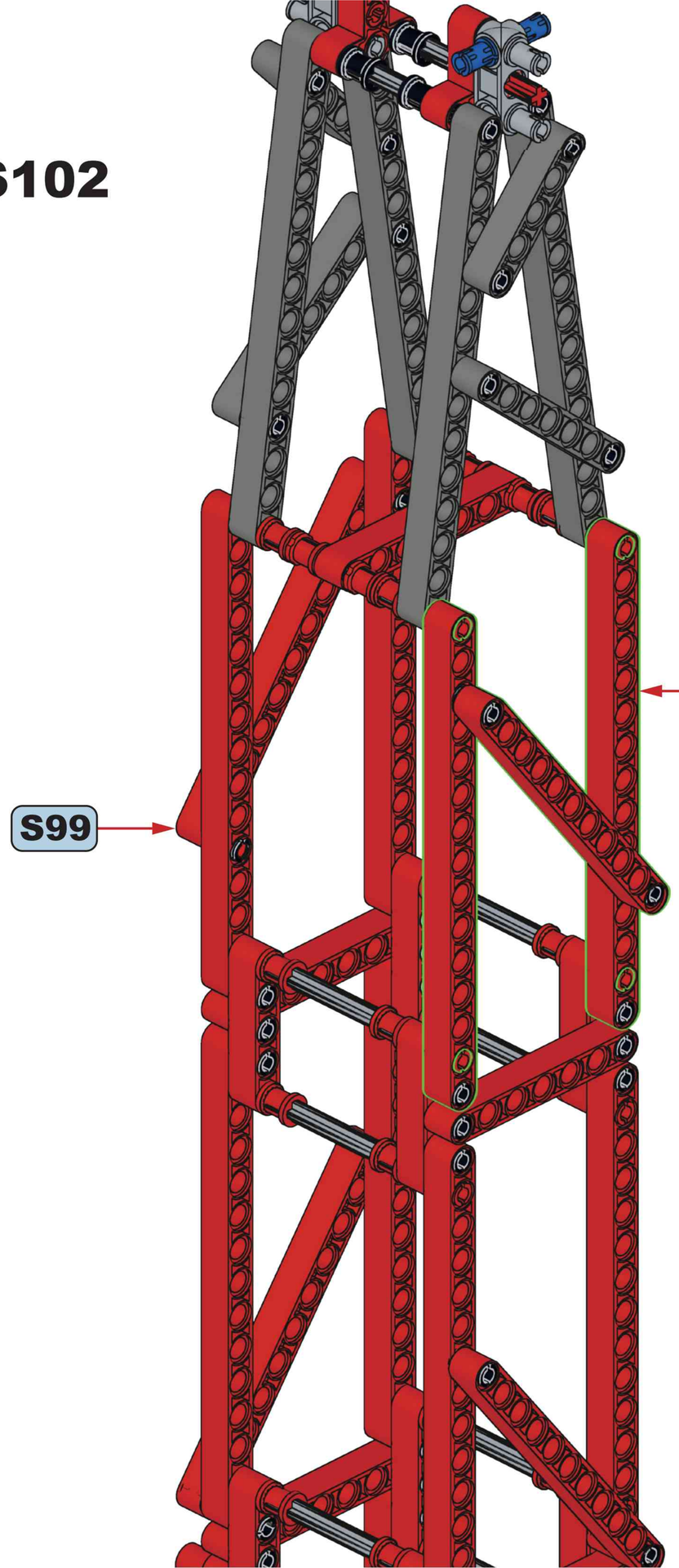

S103

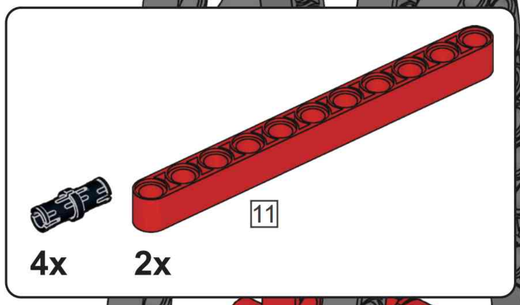

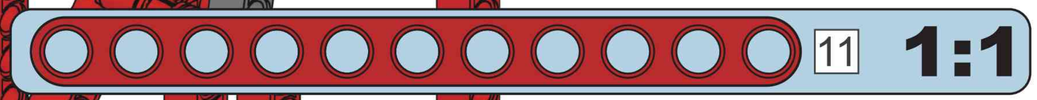

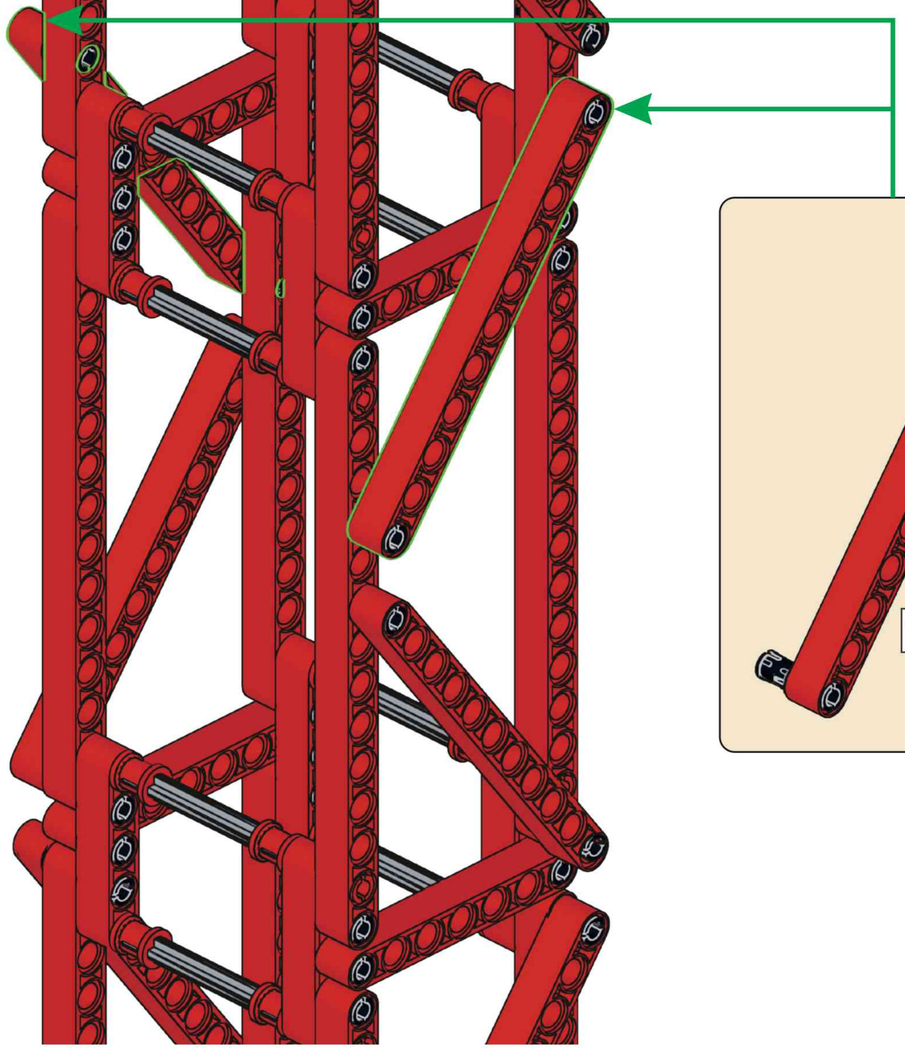

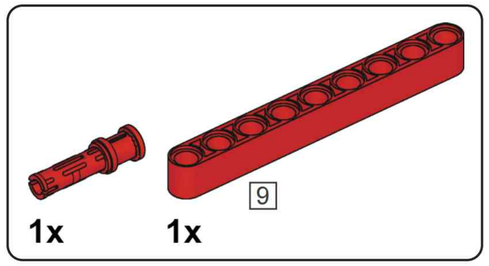

S104

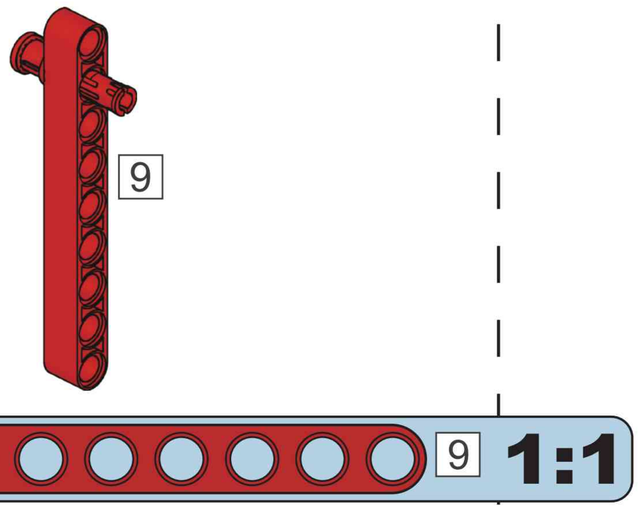

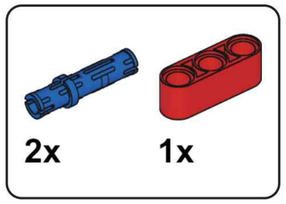

S105

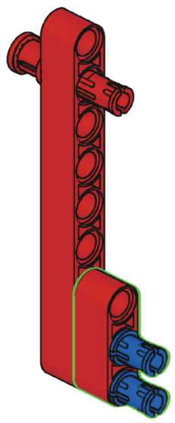

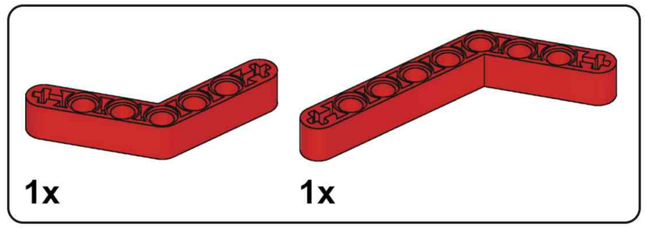

S106

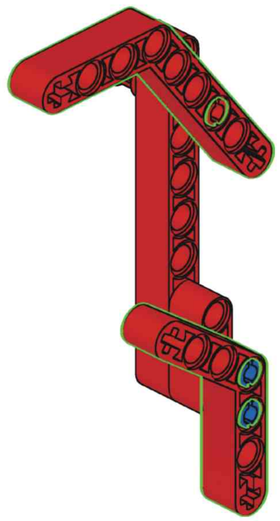

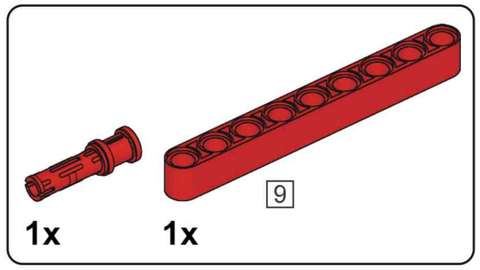

S107

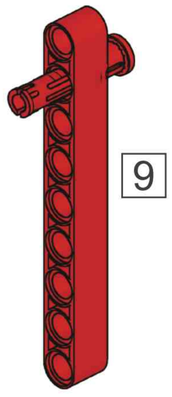

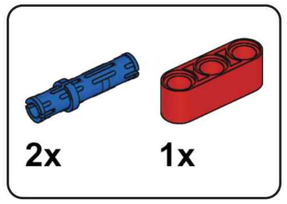

S108

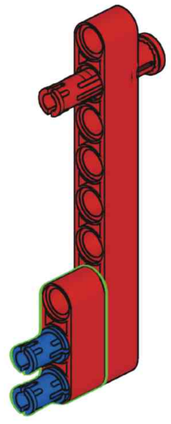

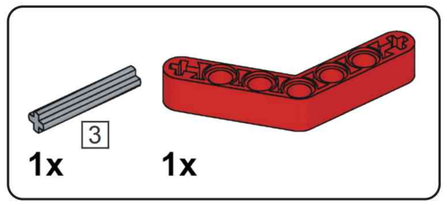

S109

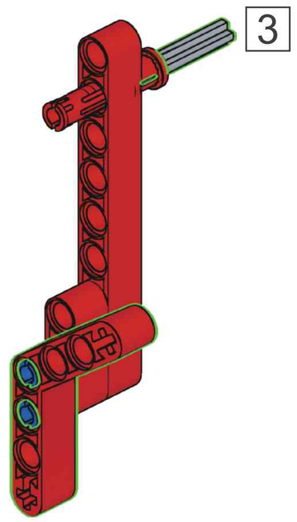

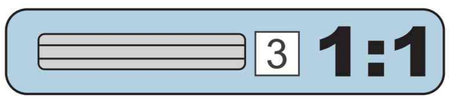

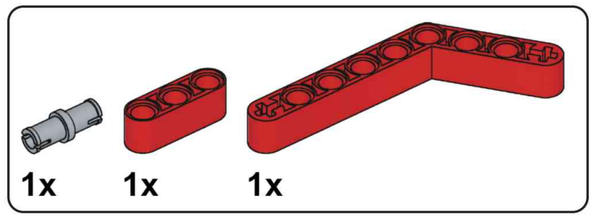

S110

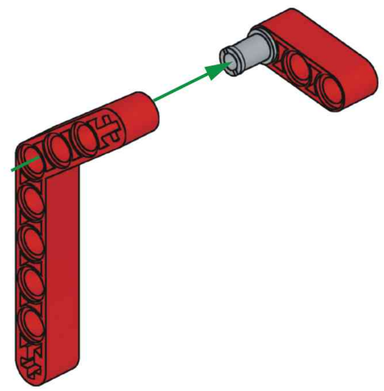

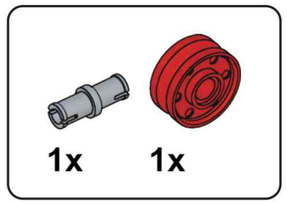

S111

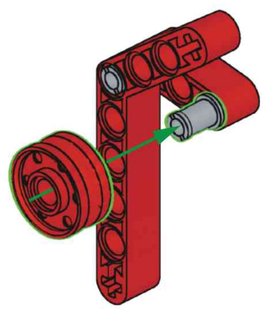

S112

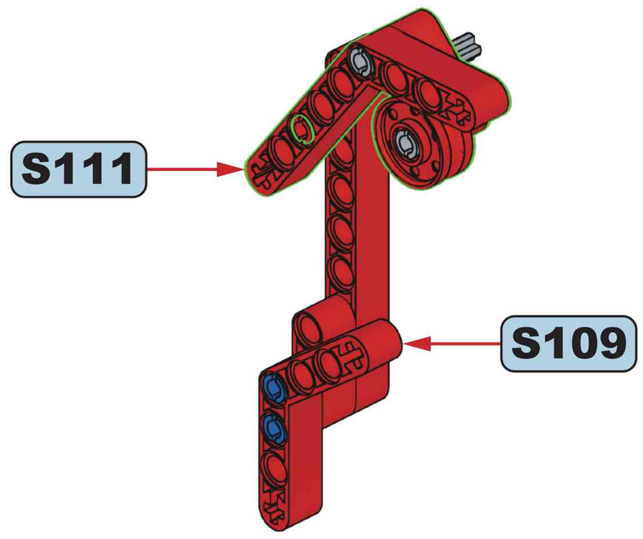

S113

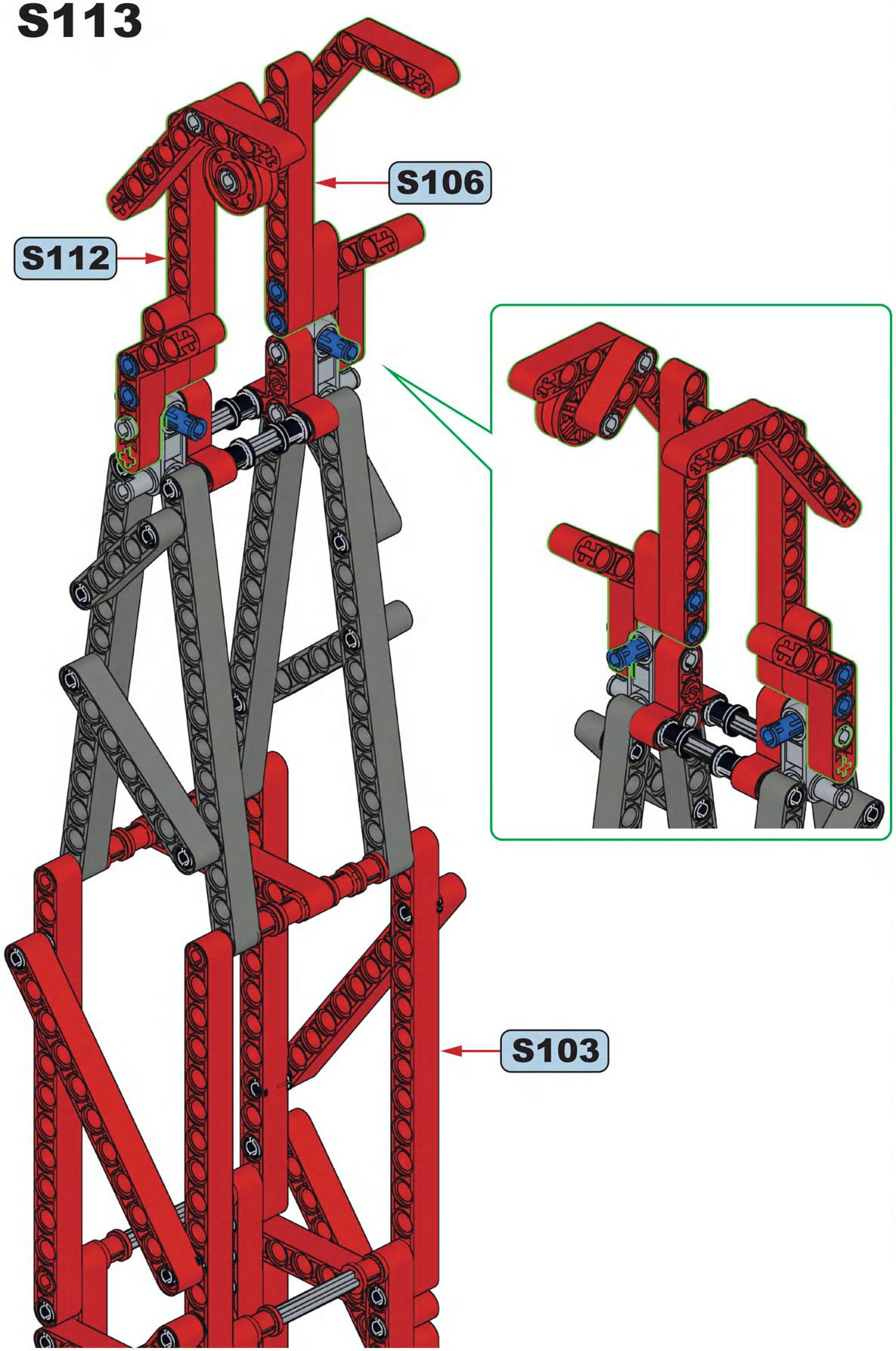

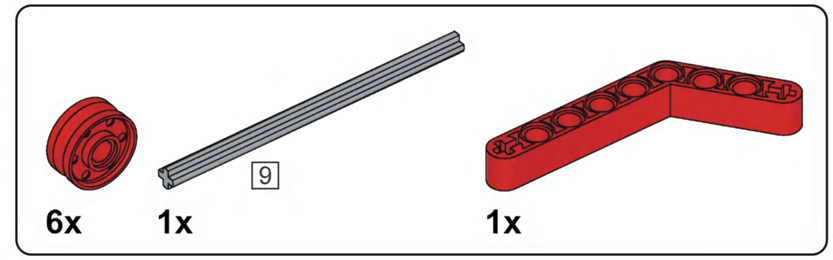

S114



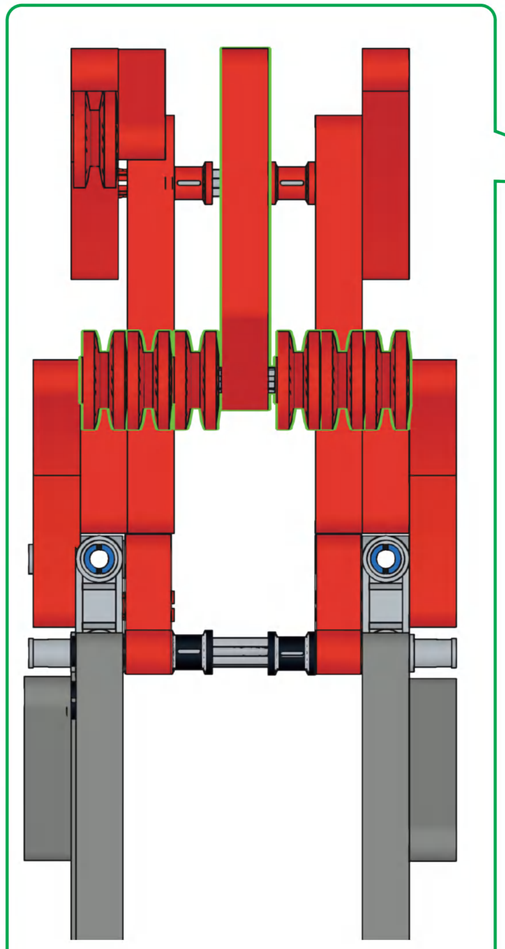

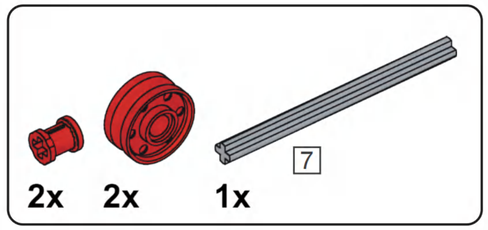

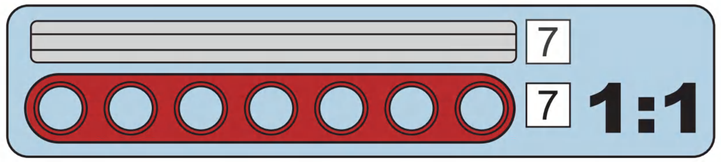

S115

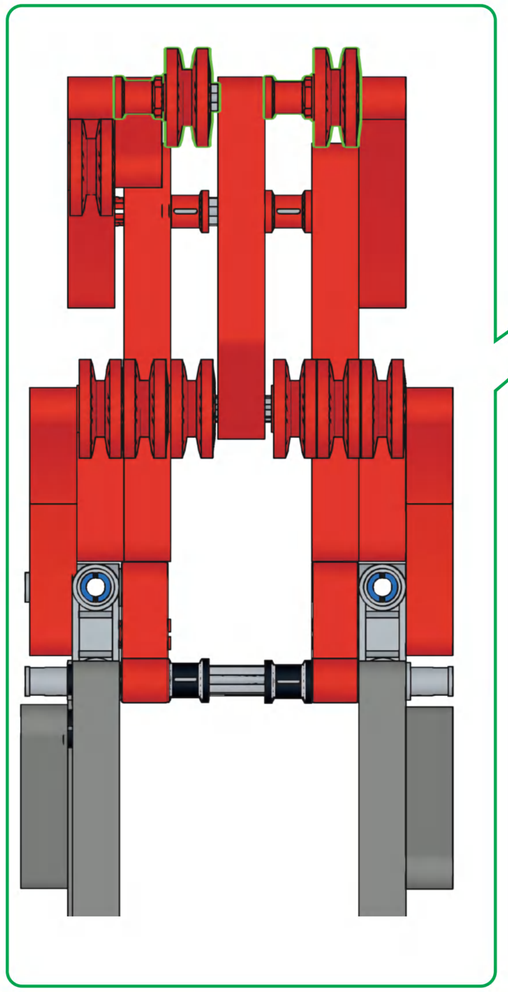

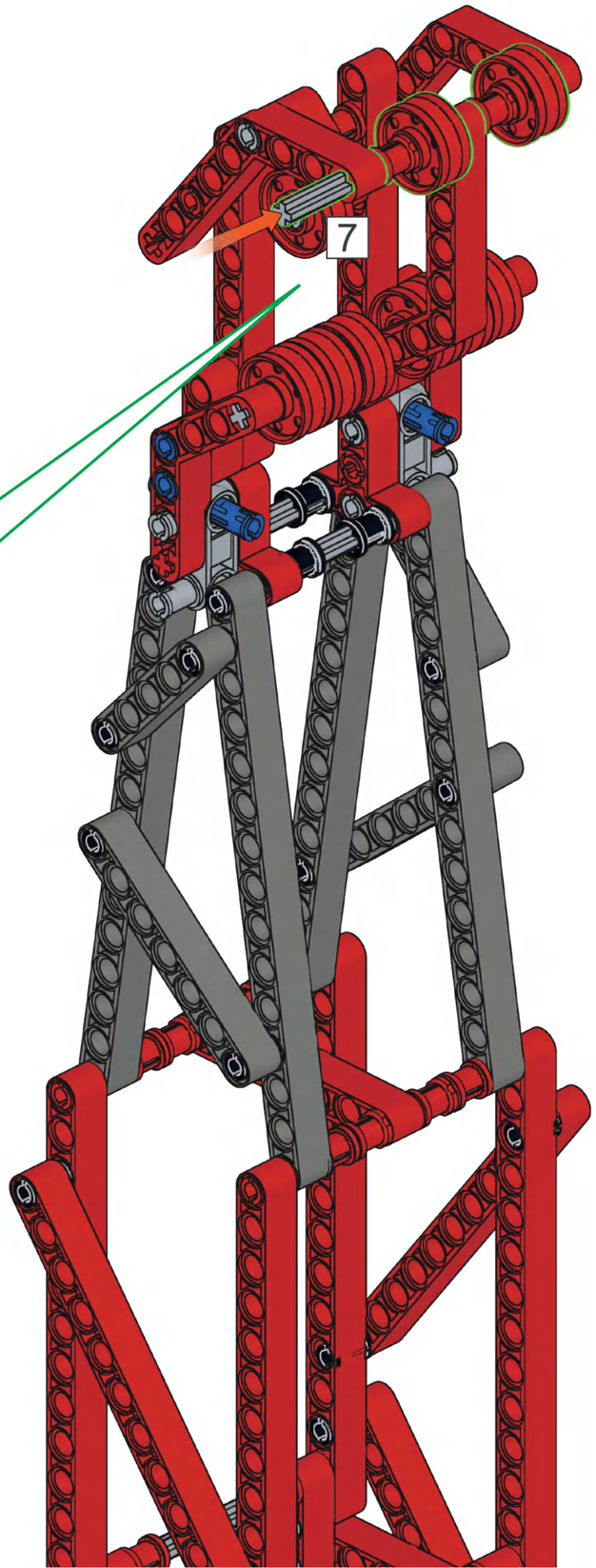

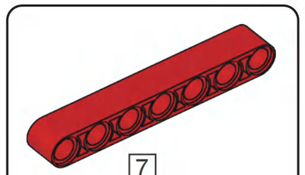

S116

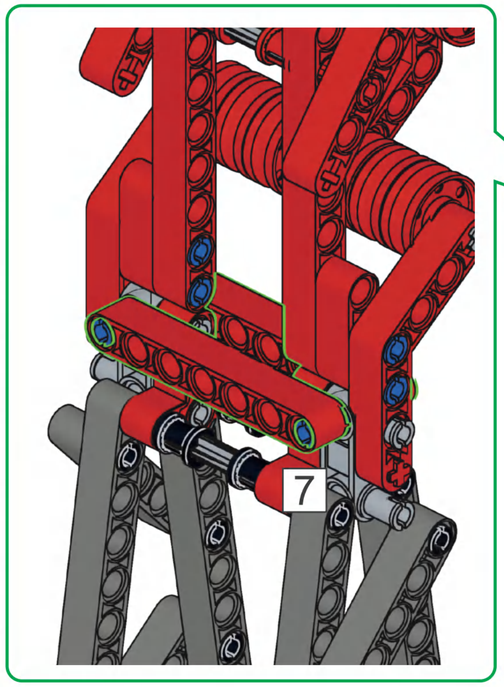

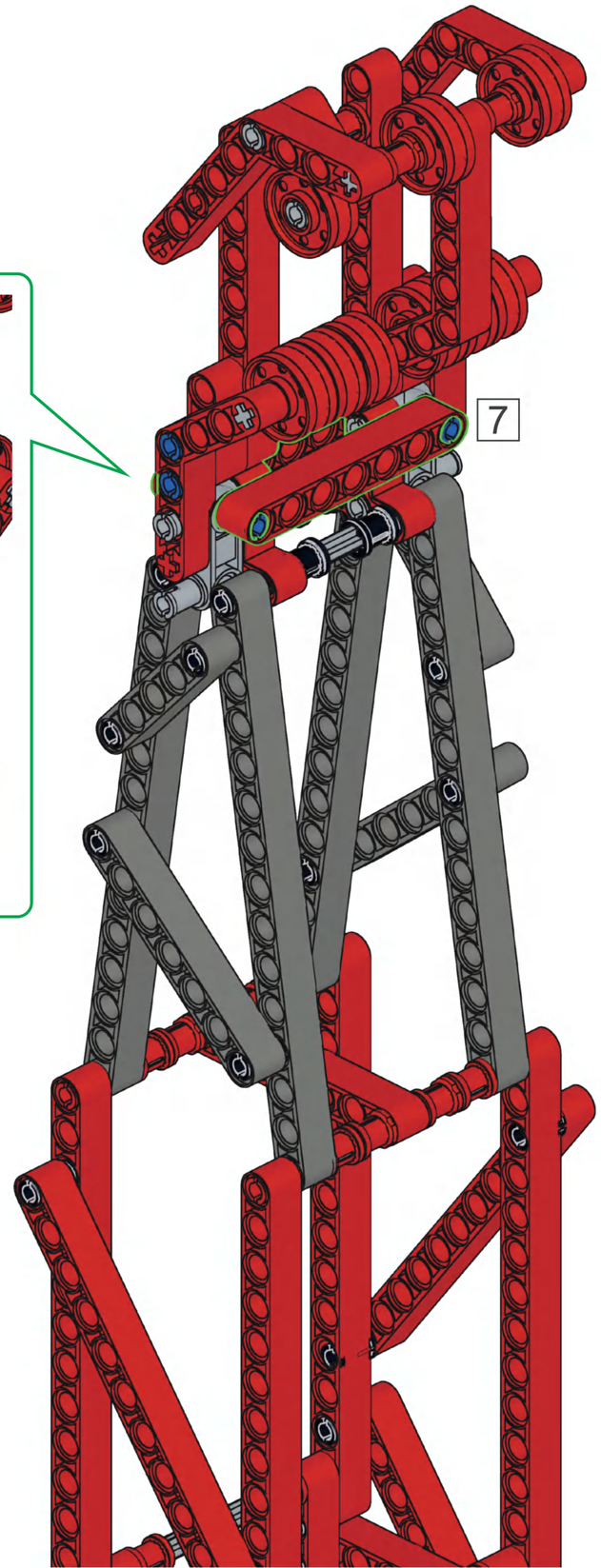

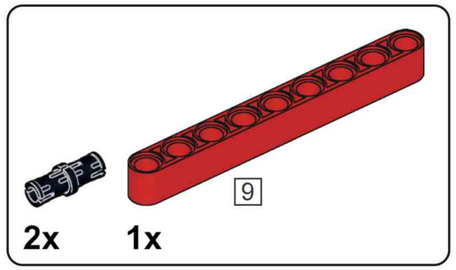

S117

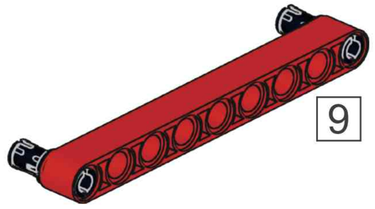

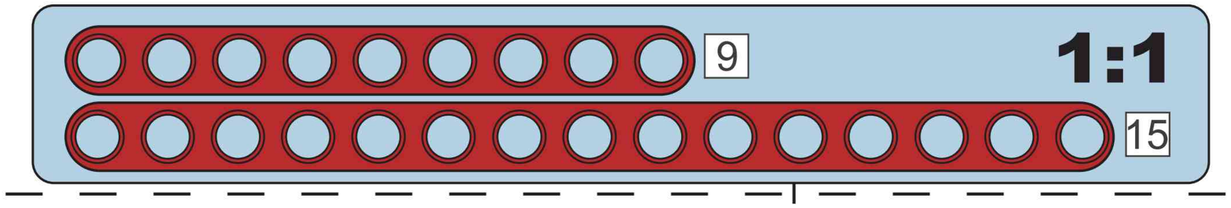

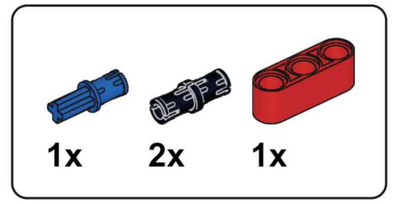

S118

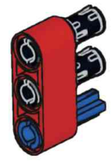

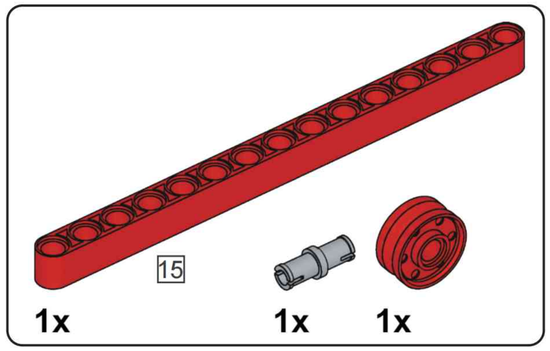

S119

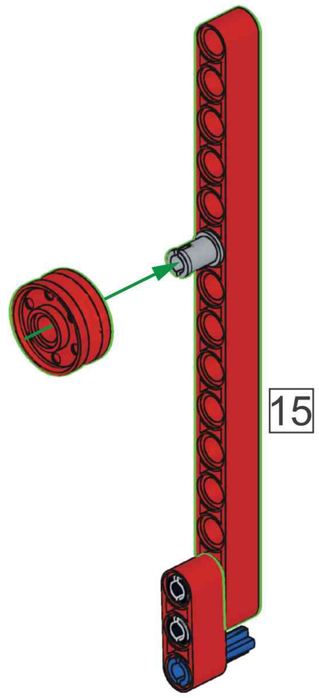

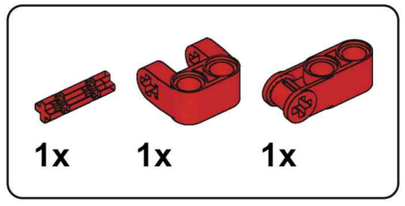

S120

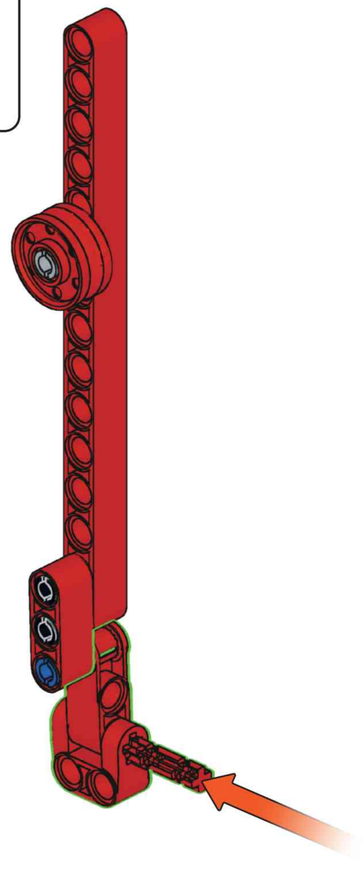

S121

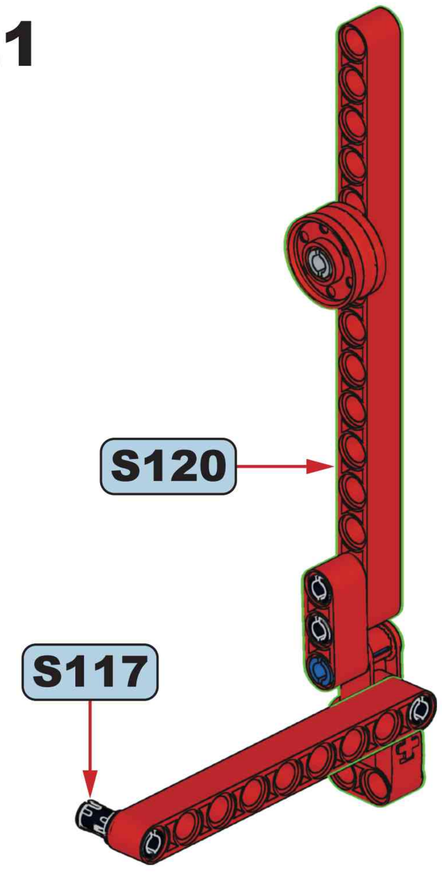

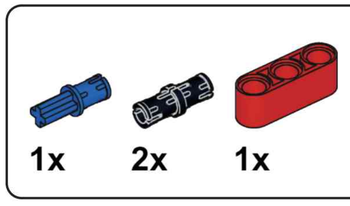

S122



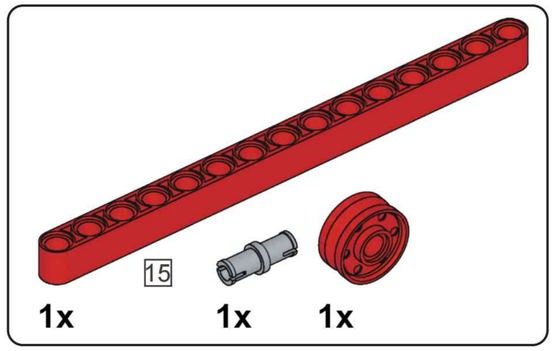

S123

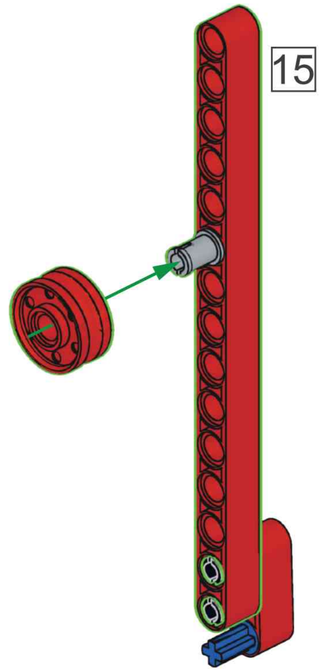

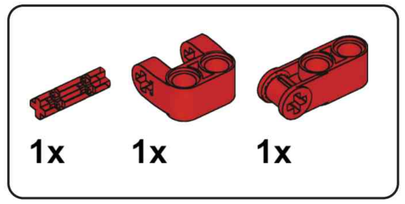

S124

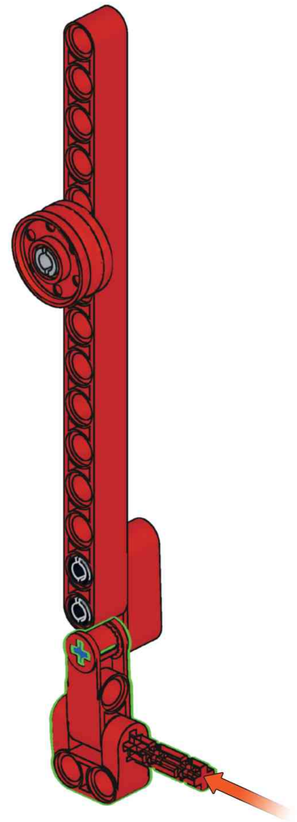

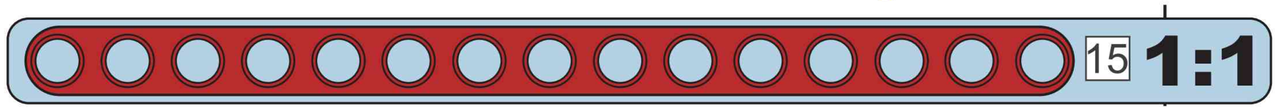

S125

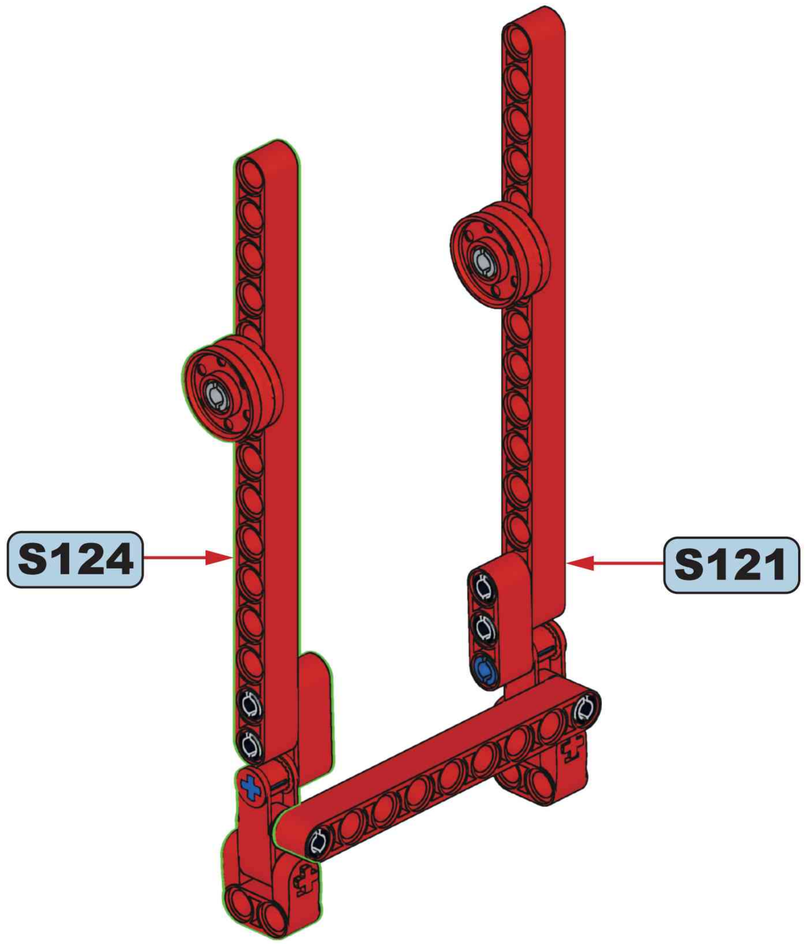

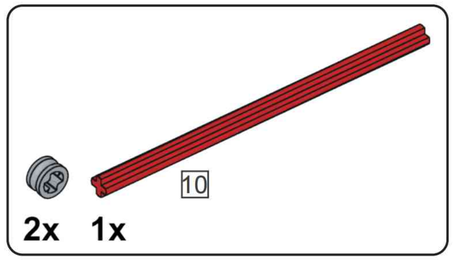

S126

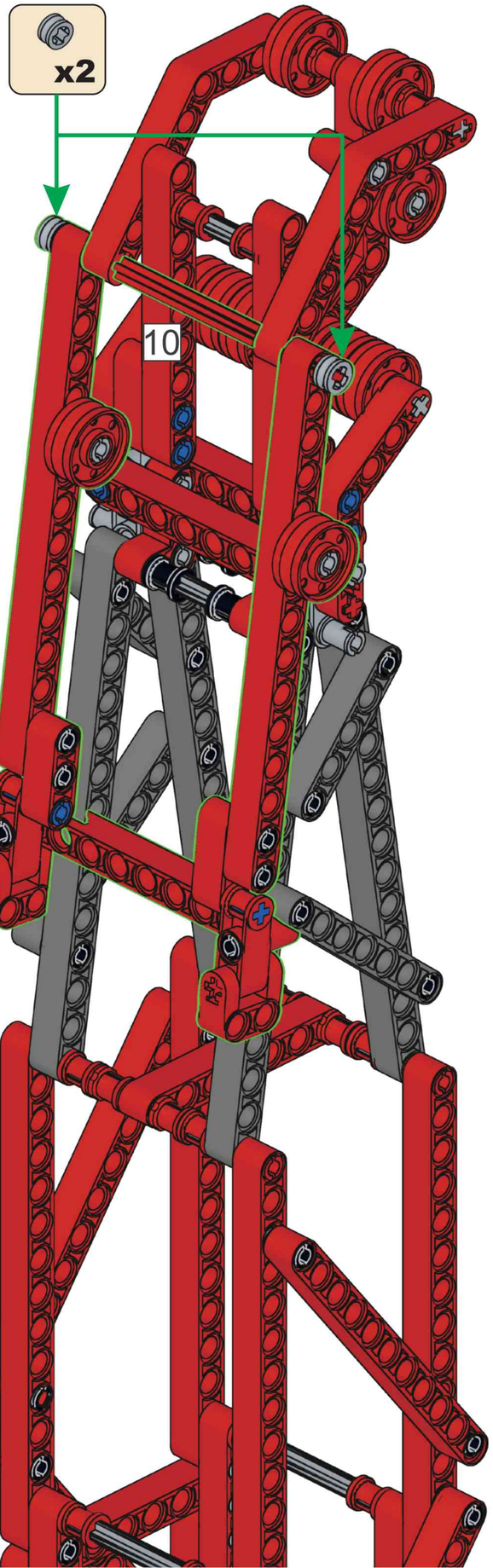

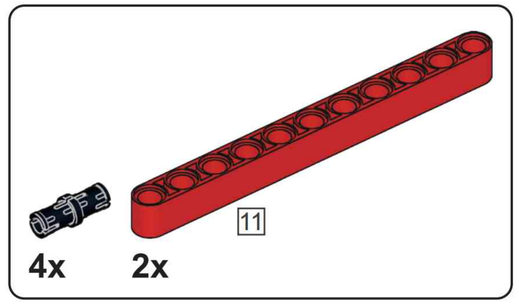

S127

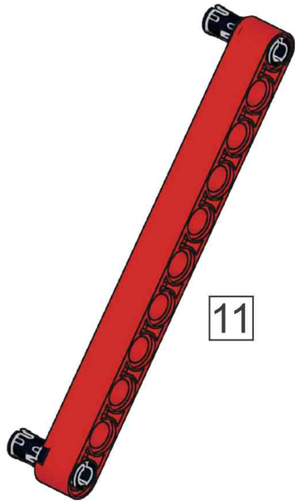

x2

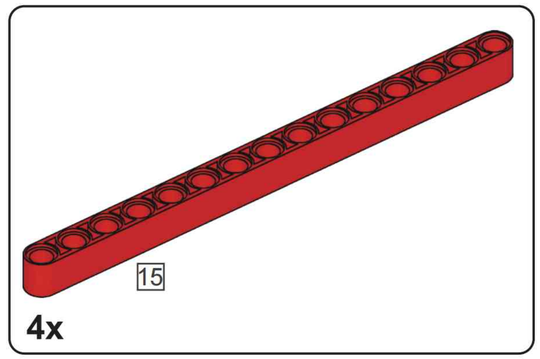

S128

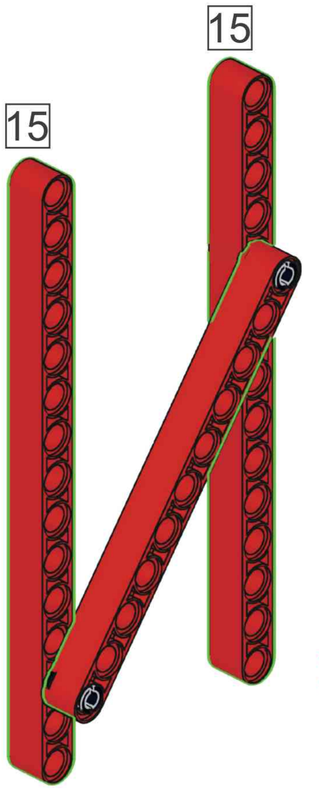

x2

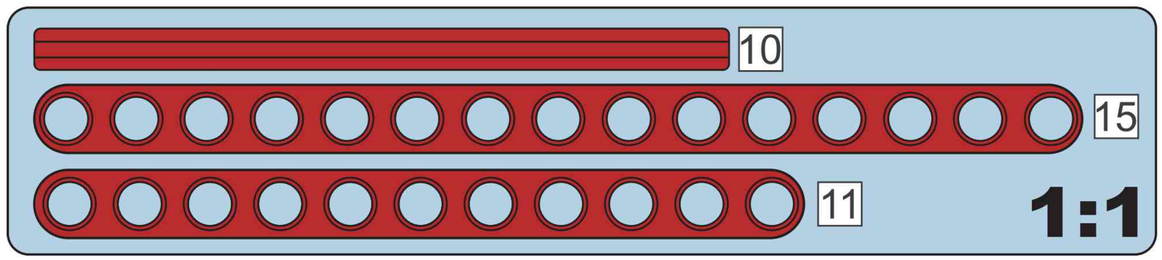

S129

1

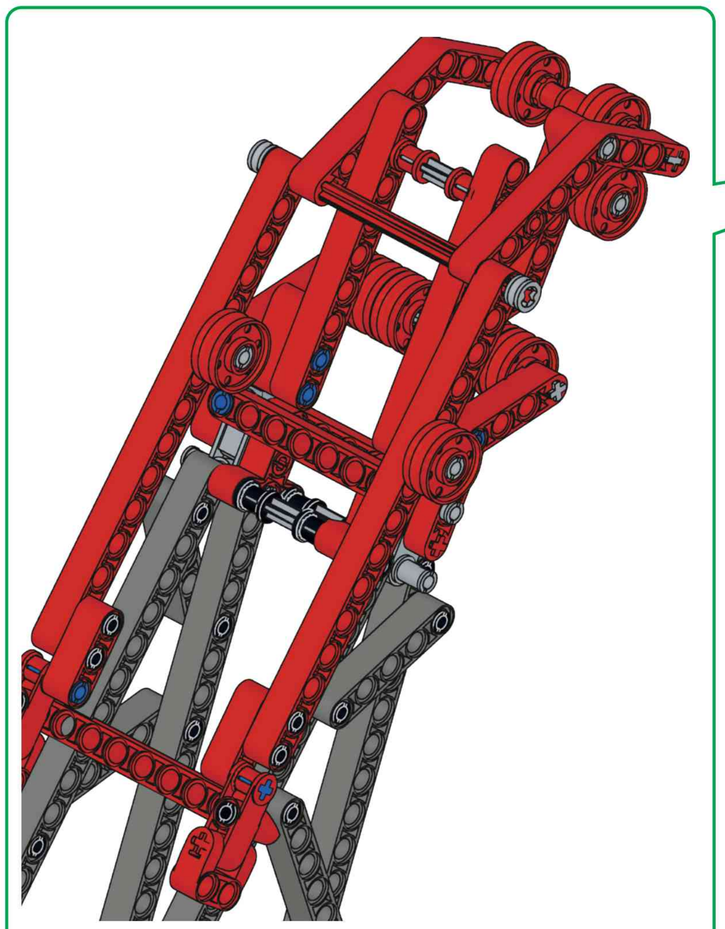

2

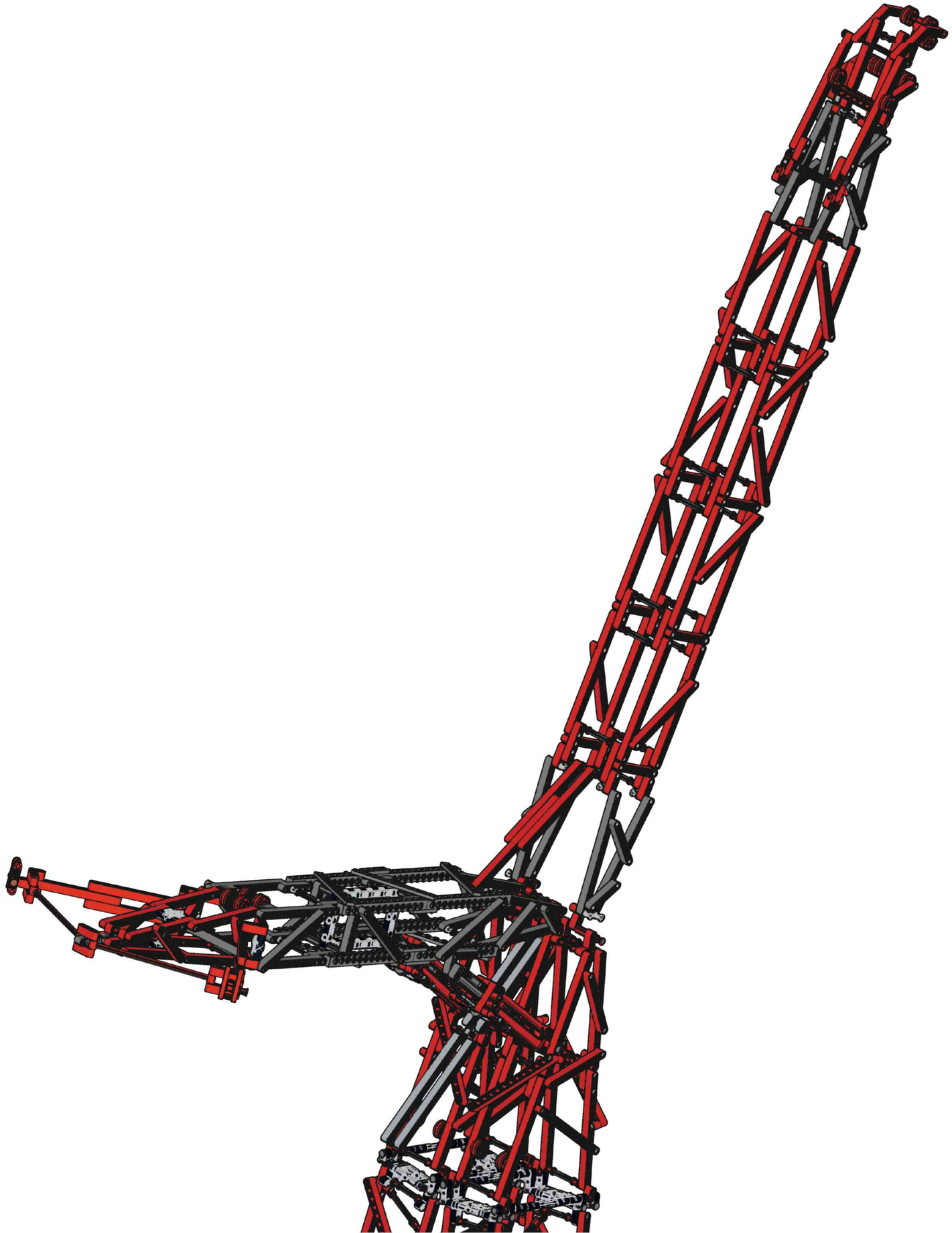

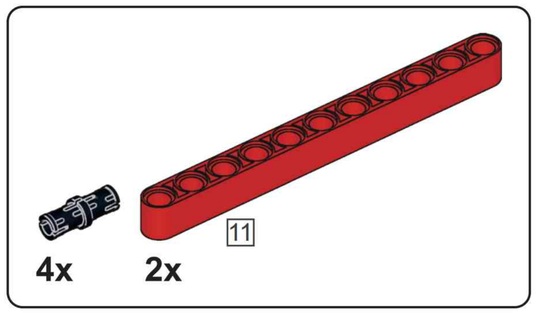

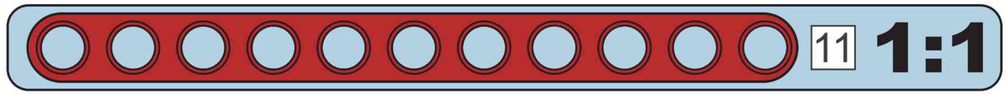

S130

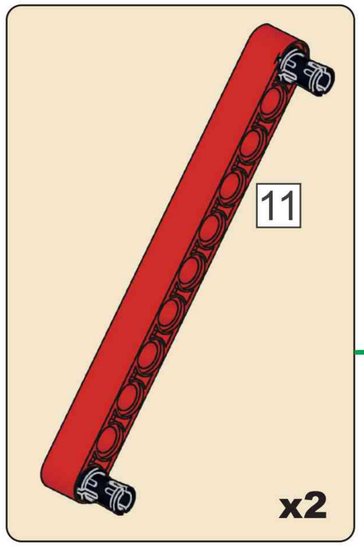

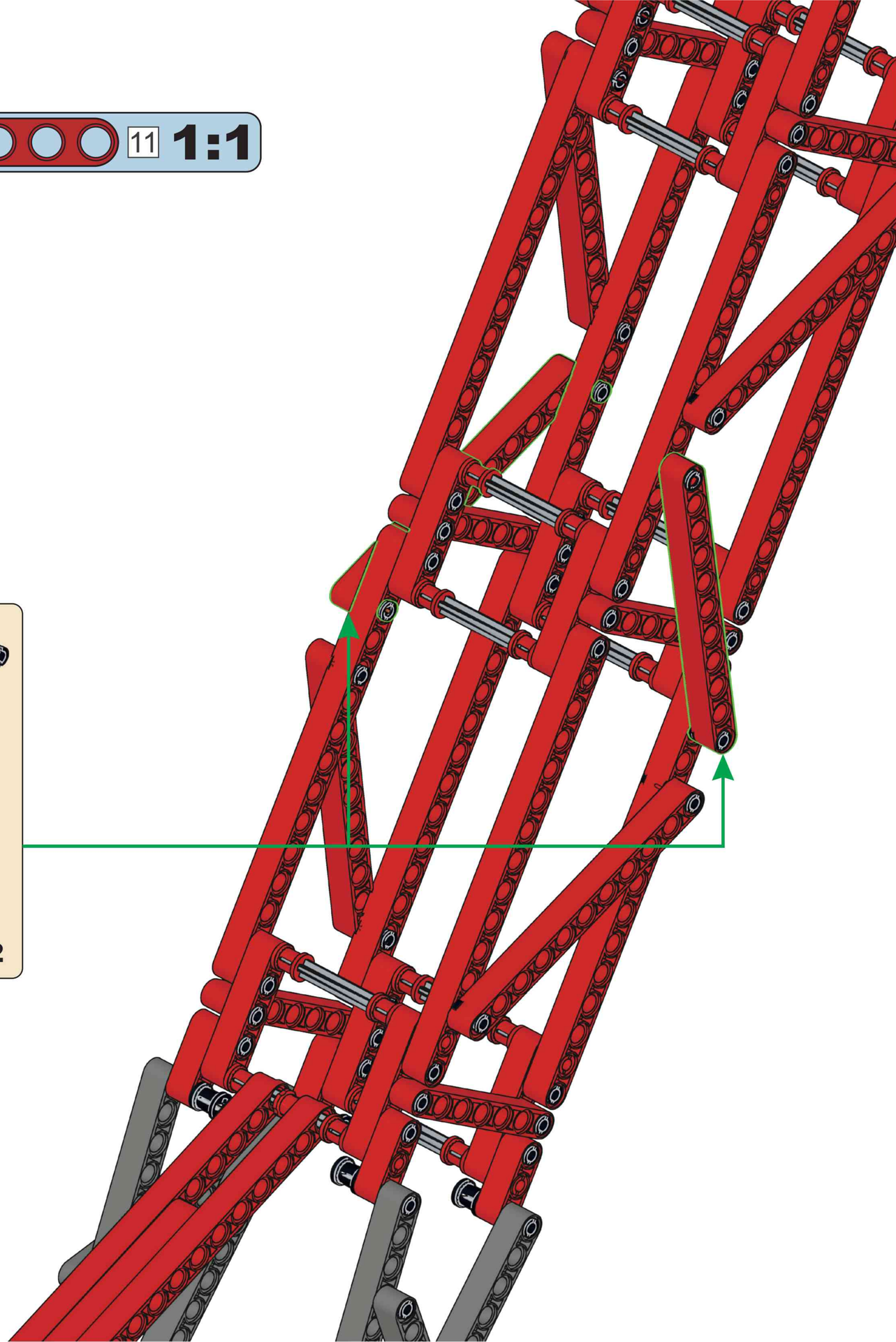





T

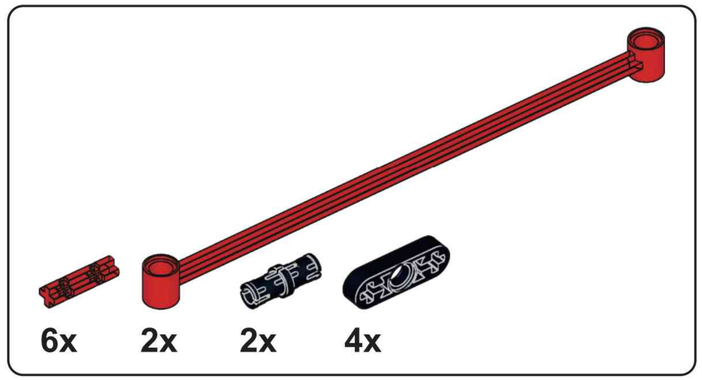

T1

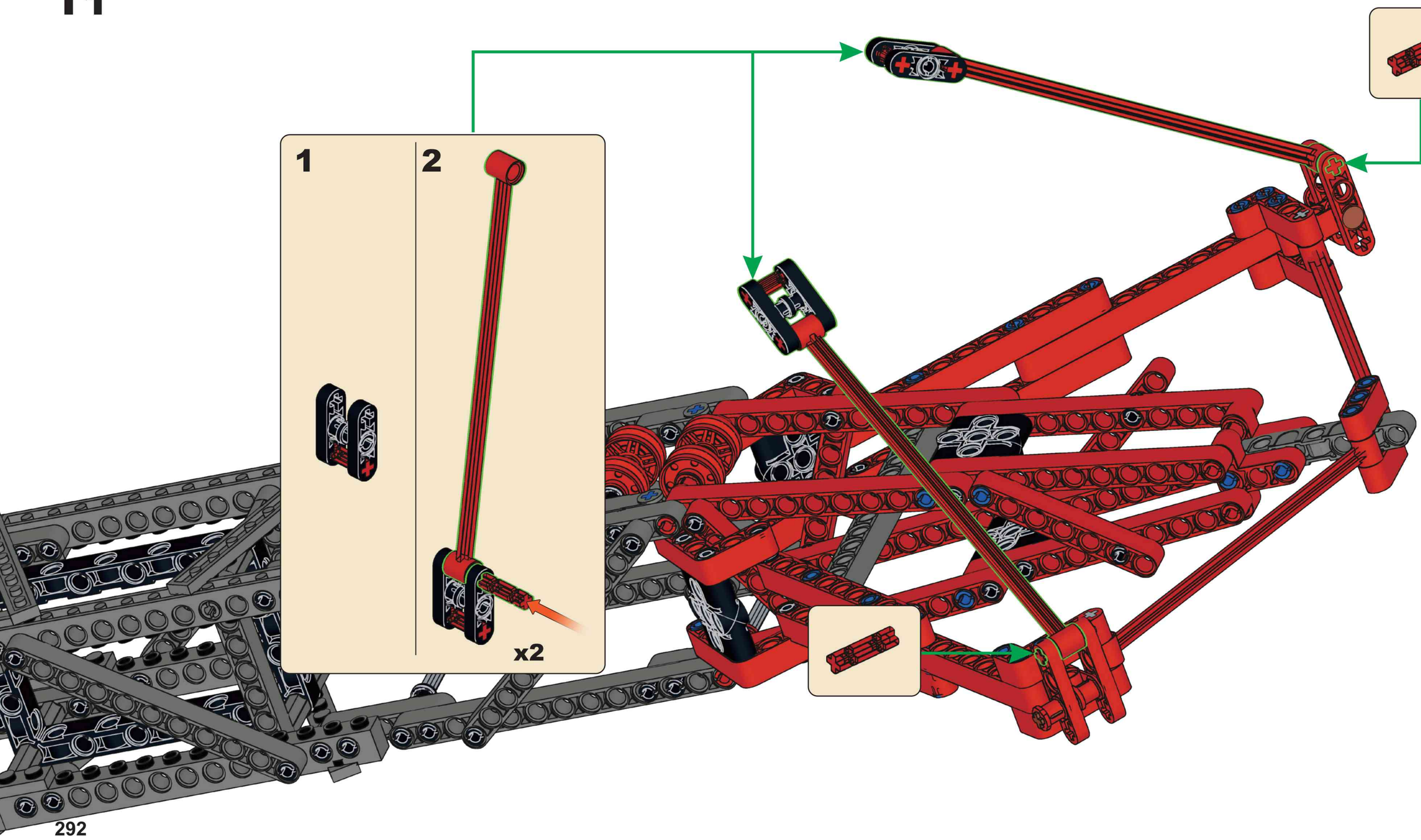

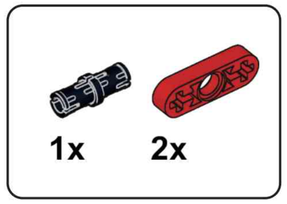

T2

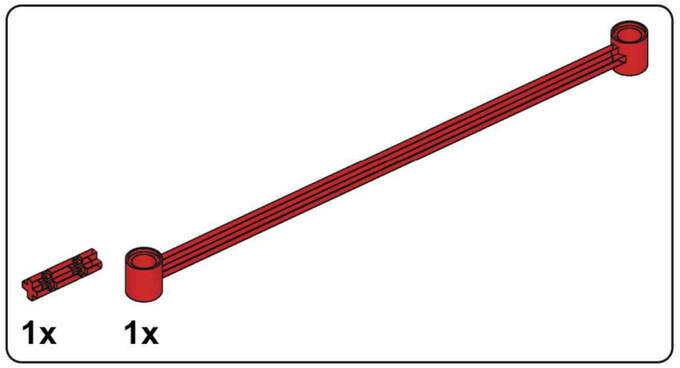

T3

T4



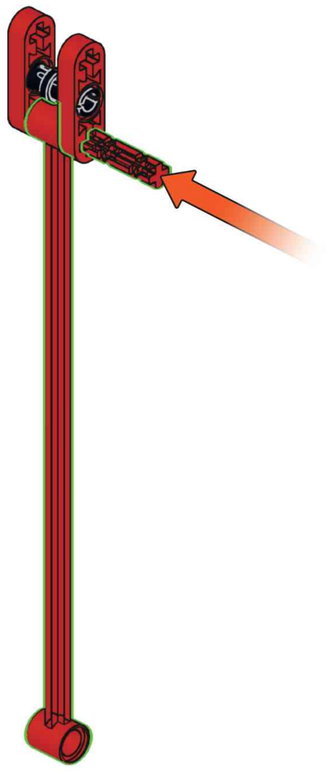

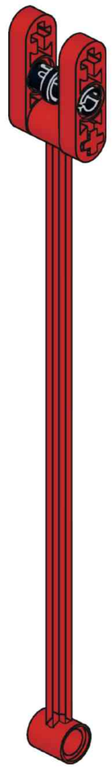

x24

1x

T5

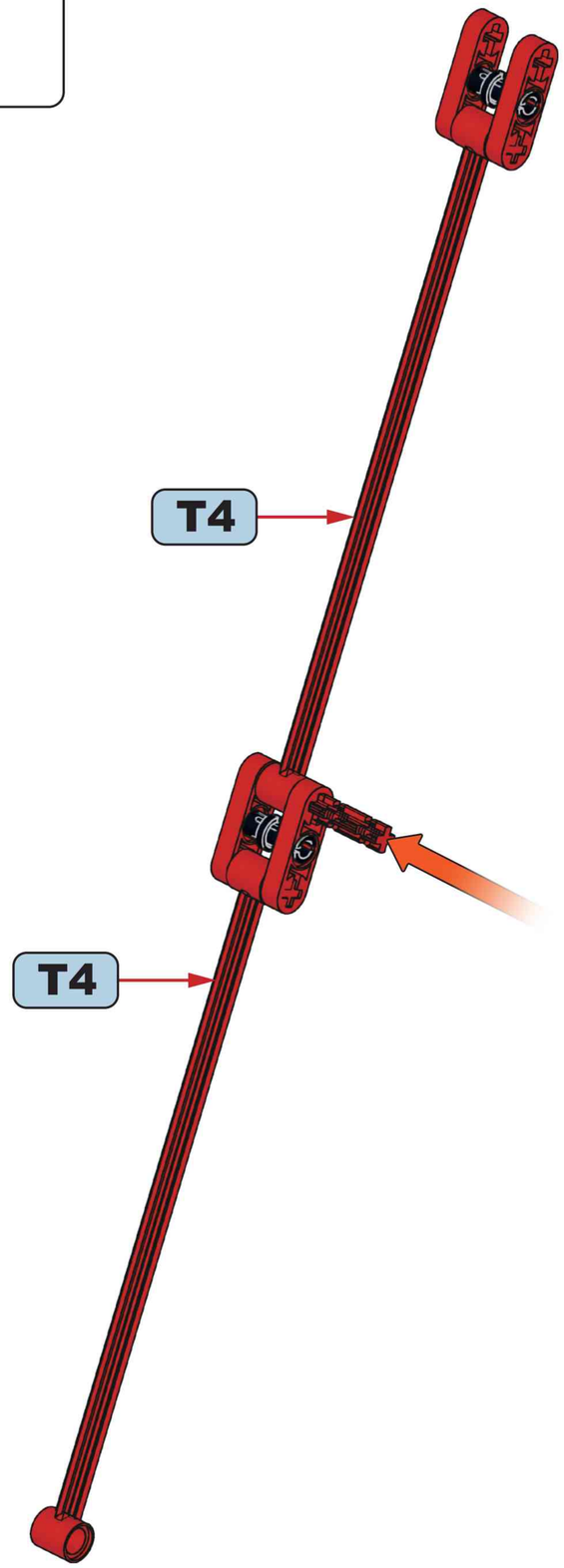

2x

T6

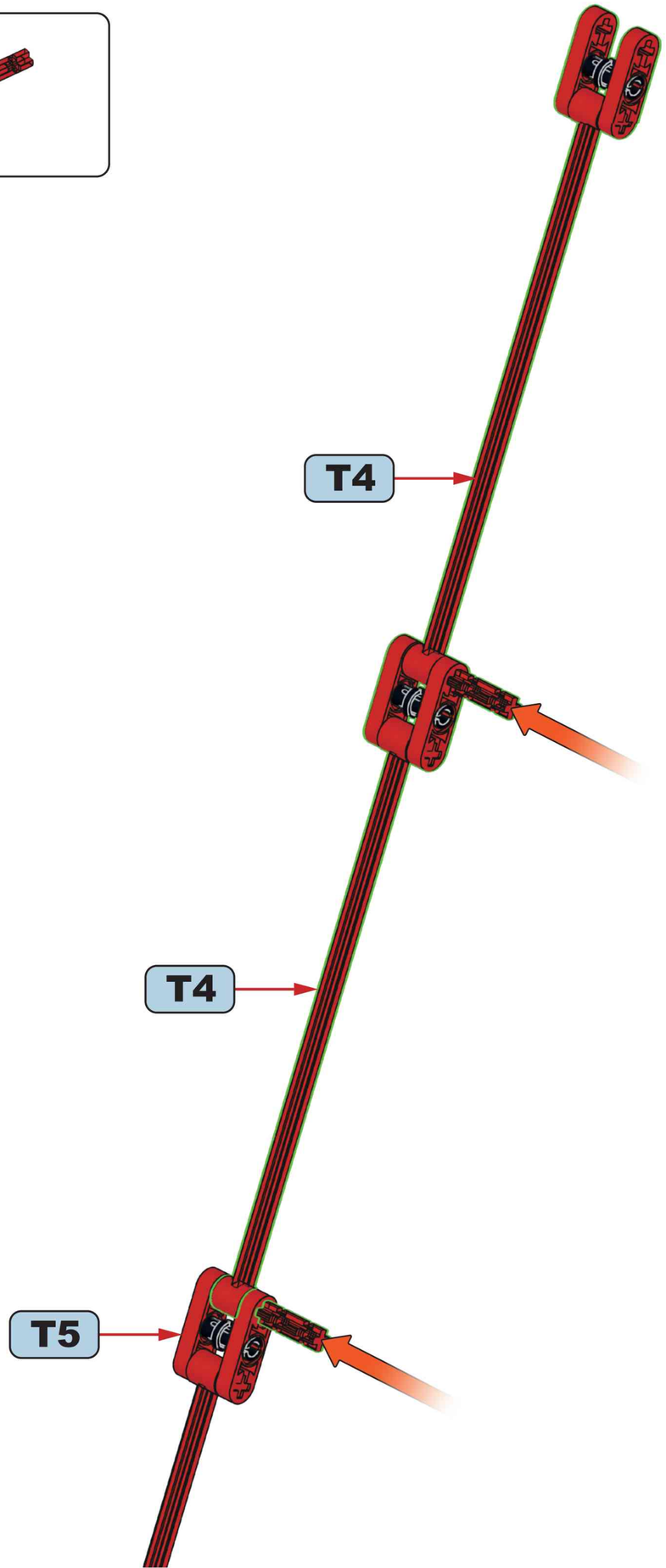

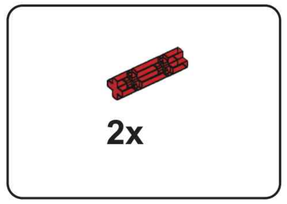

T7

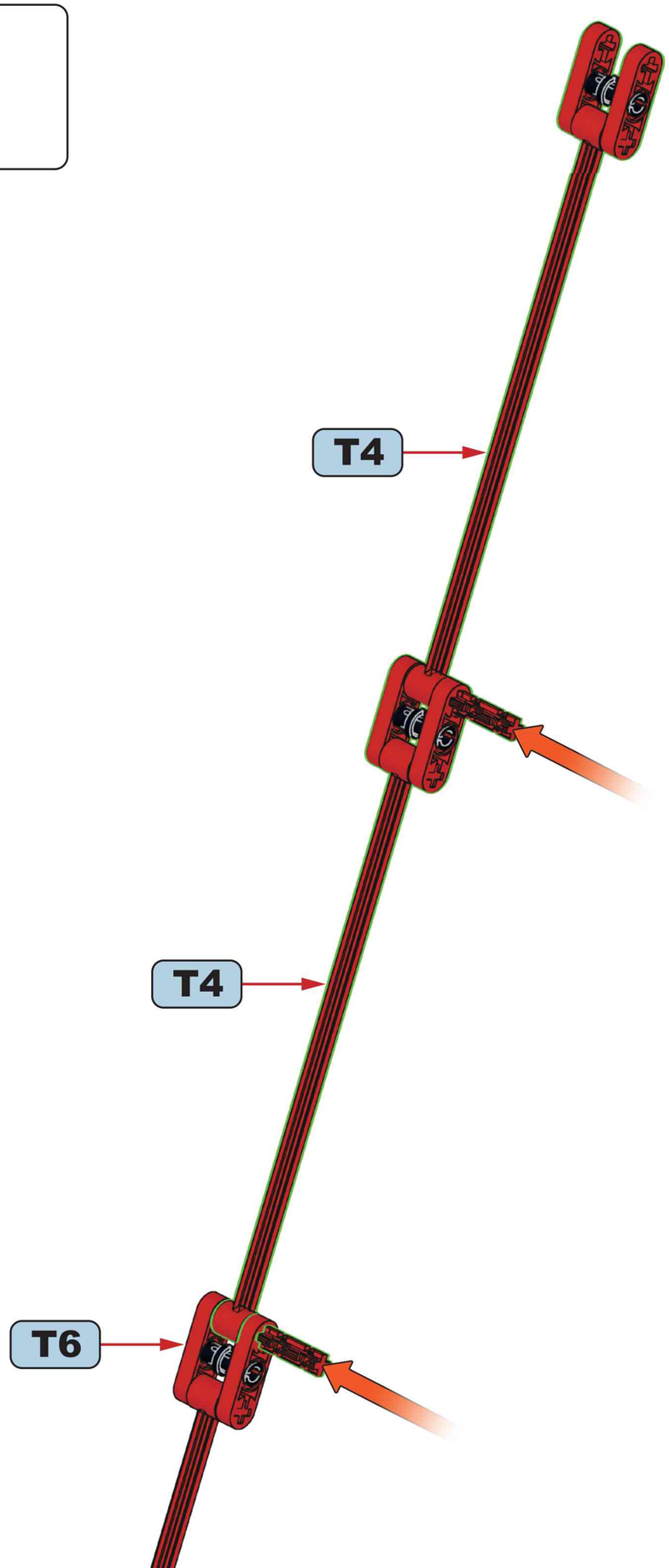

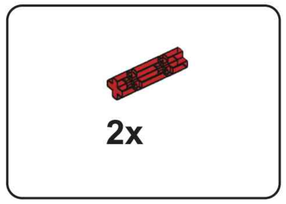

T8

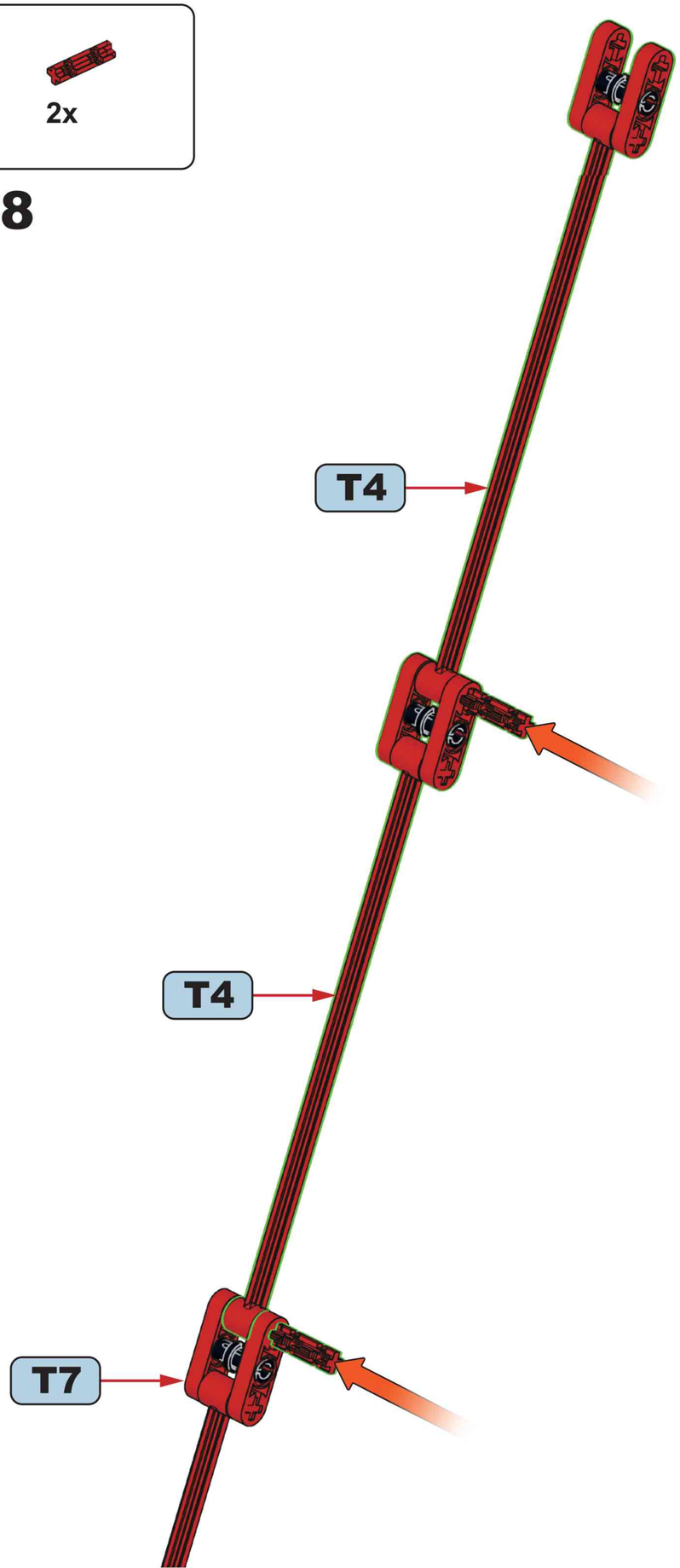

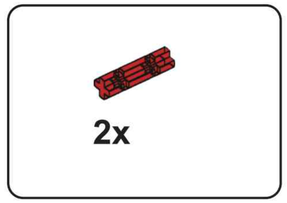

T9

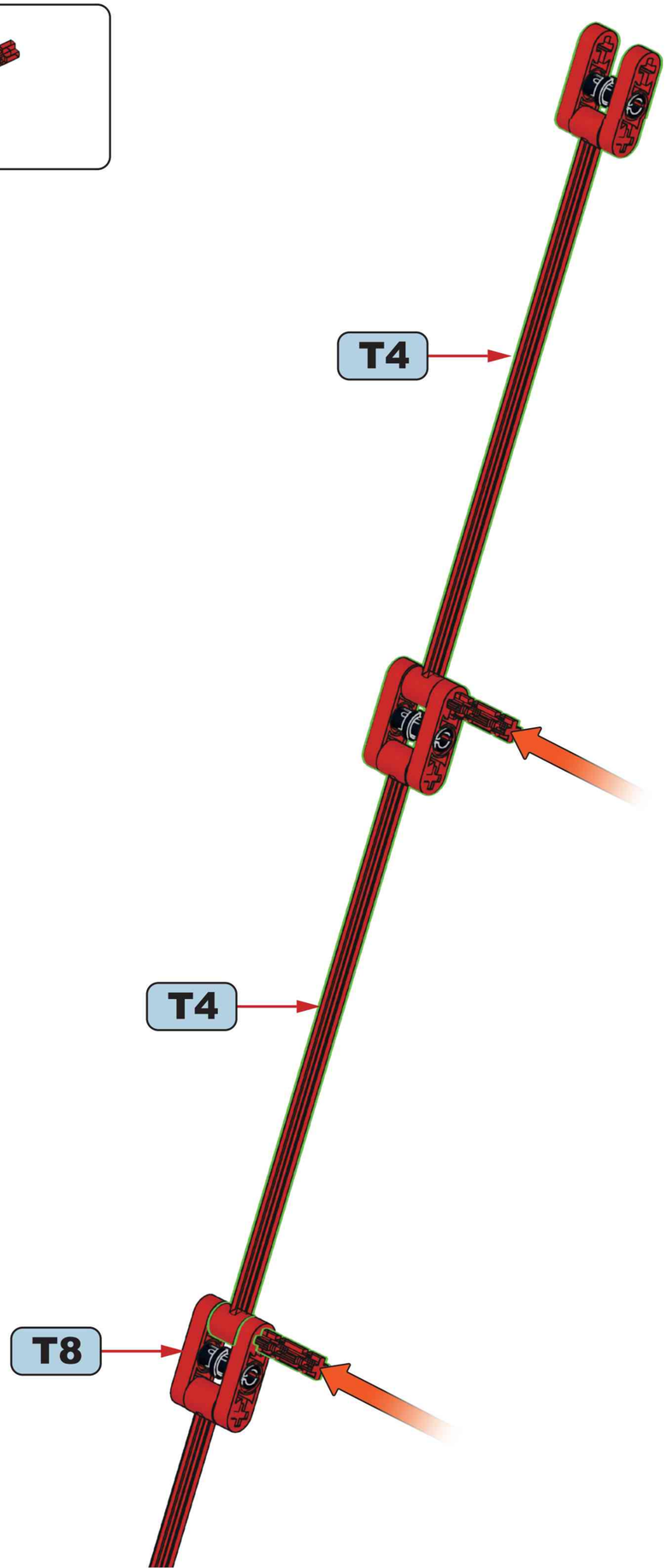

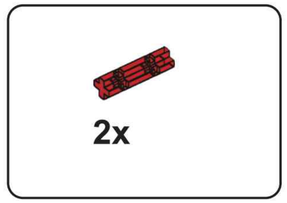

T10

T11

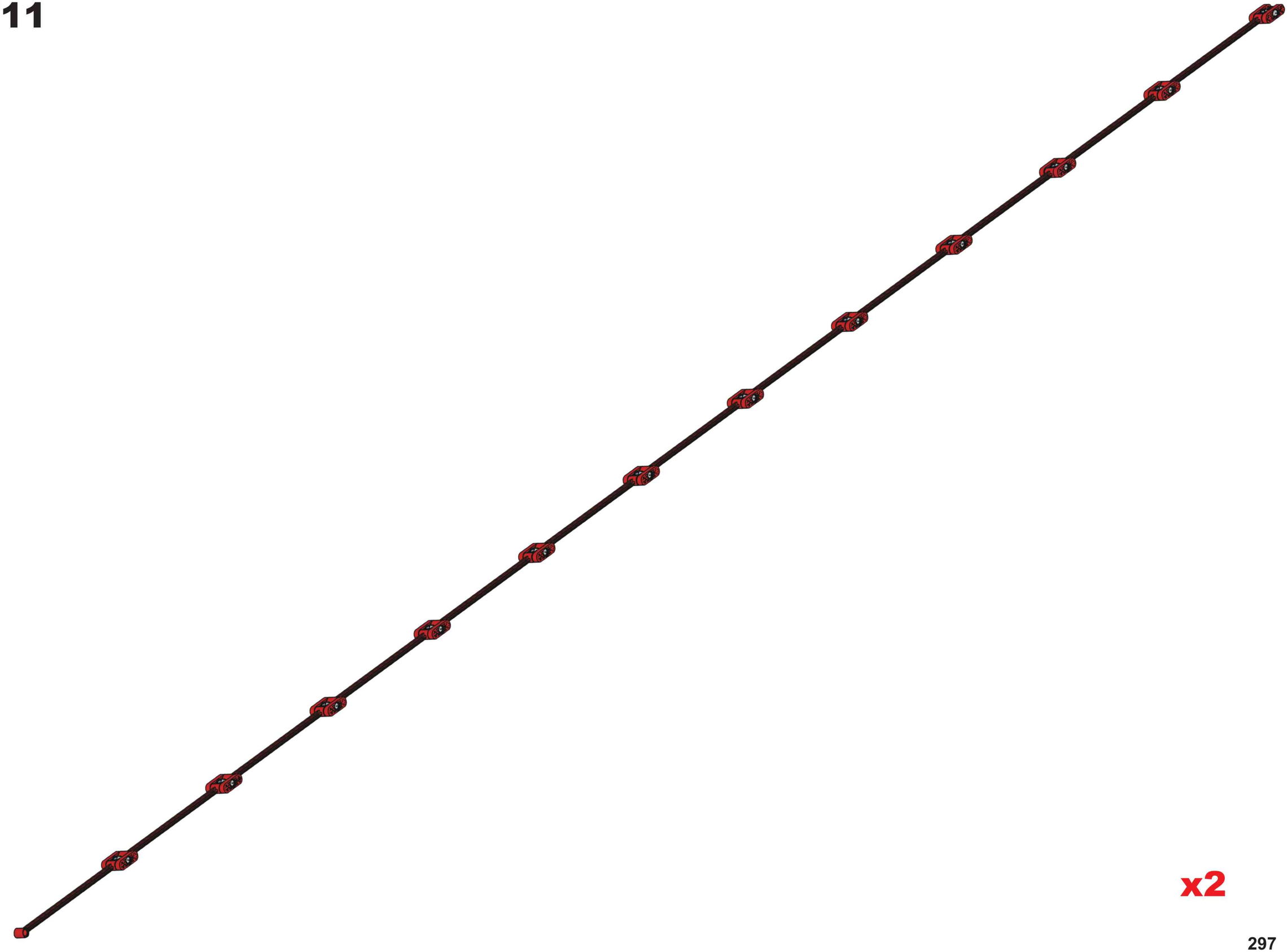

x2

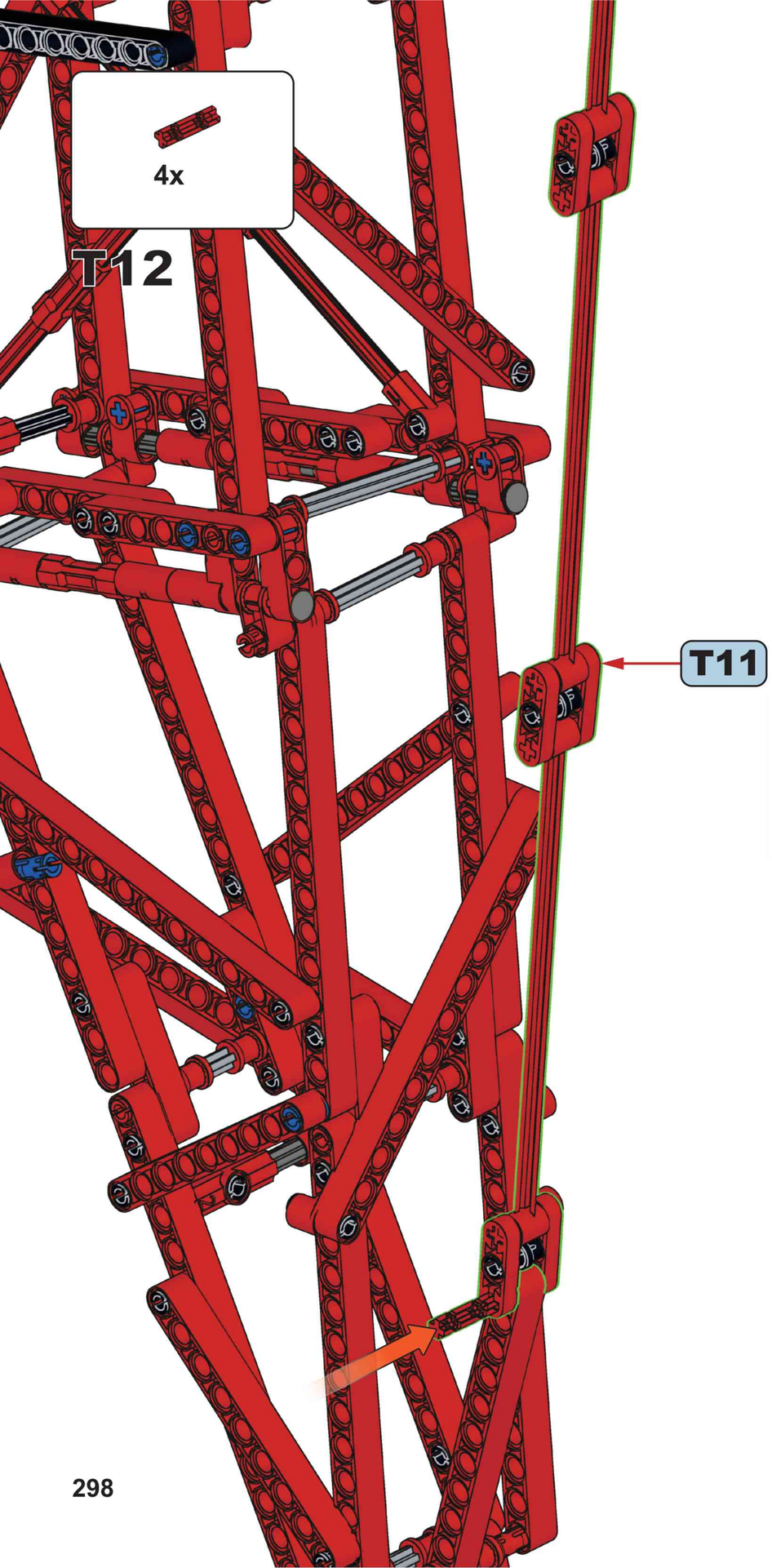

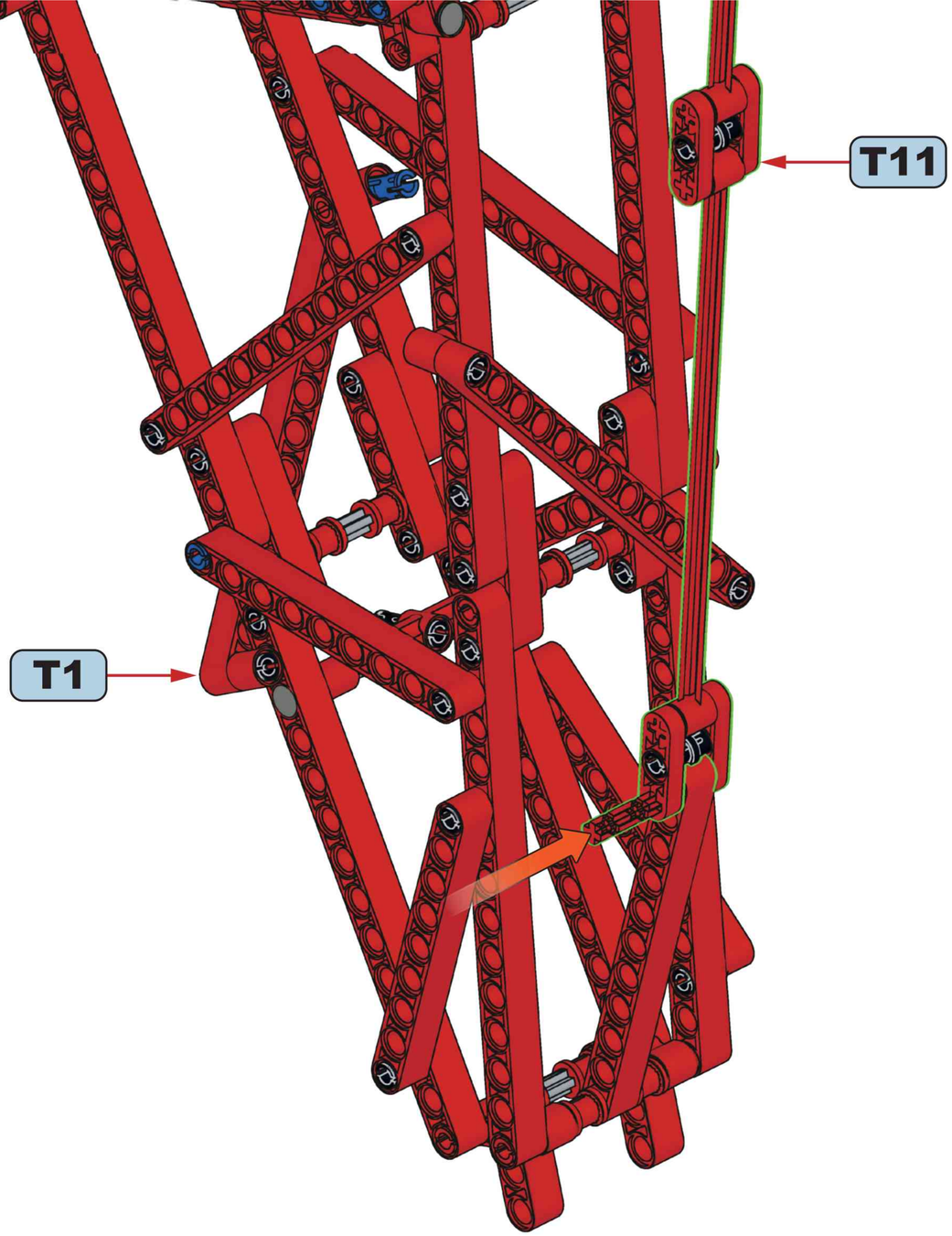

1



2

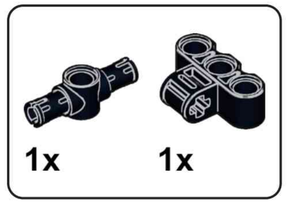

T13



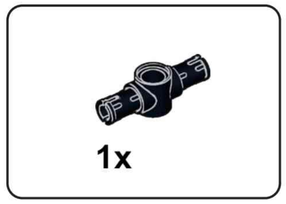

T14



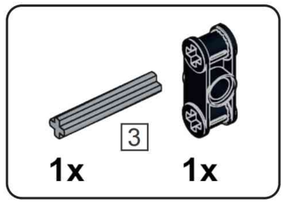

T15



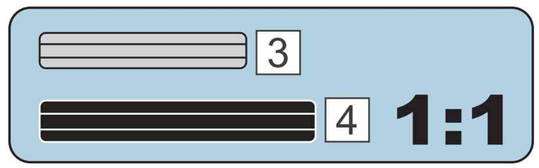



T16



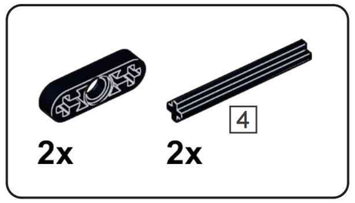

T17

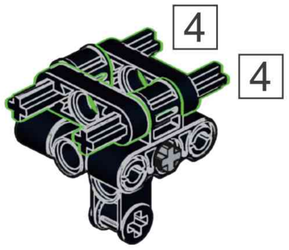

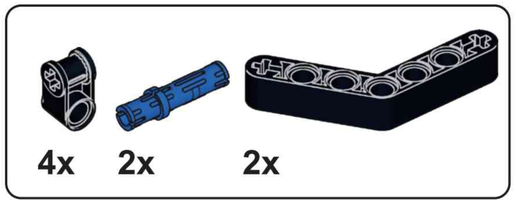

T18



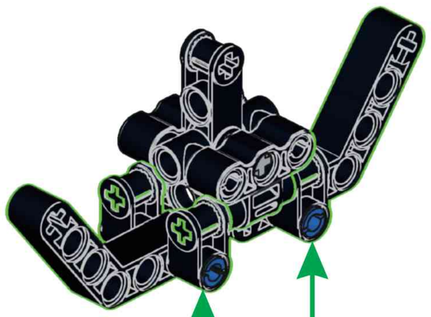

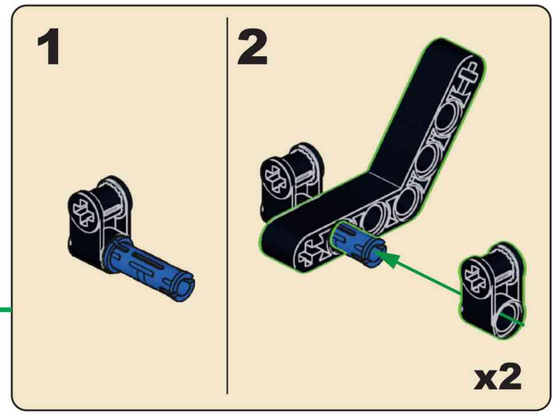

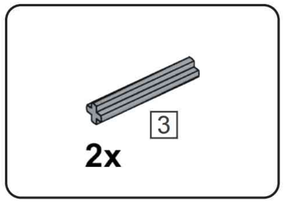

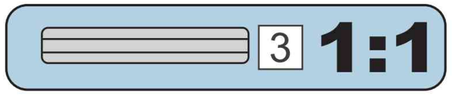

T19



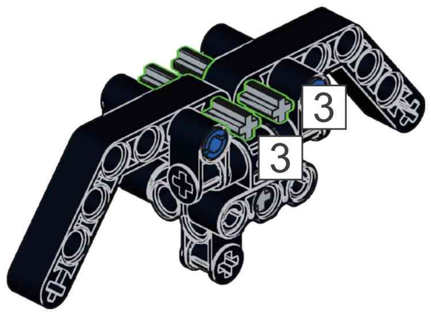

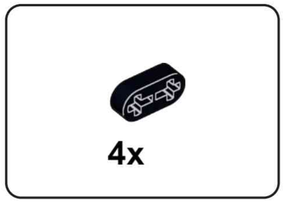

T20

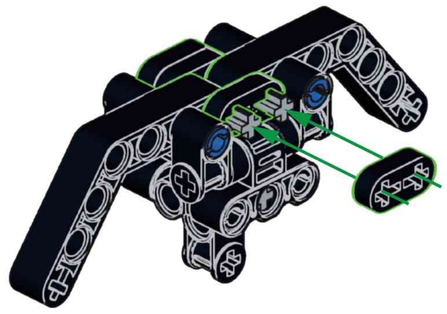

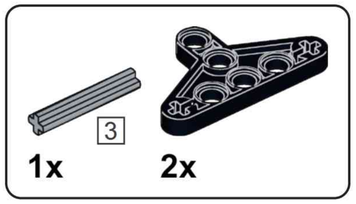

T21

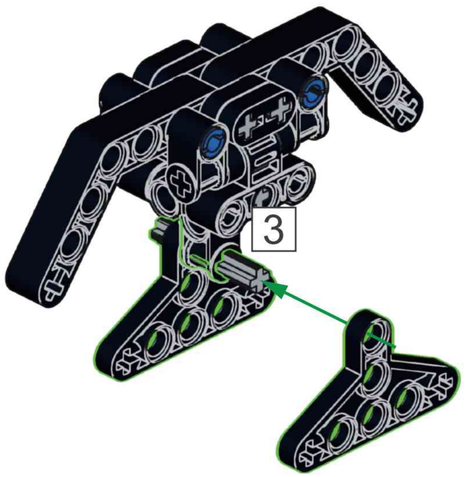

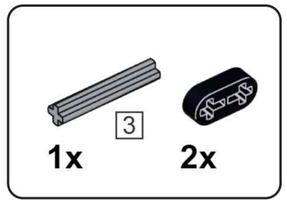

T22

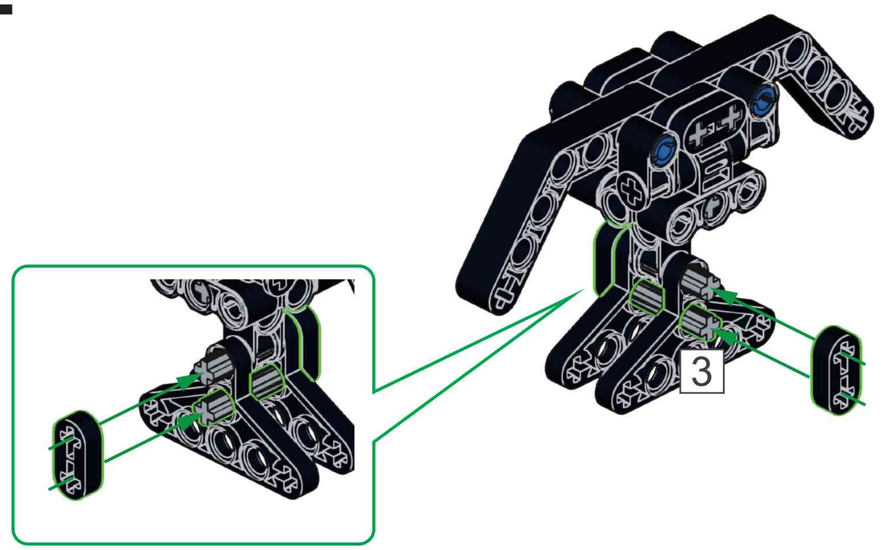

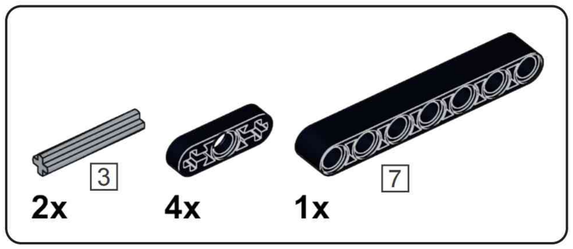

T23

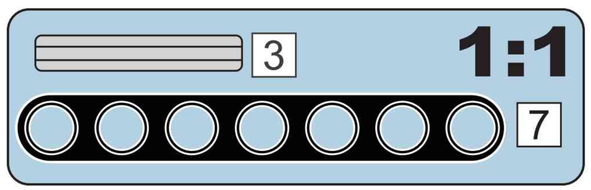

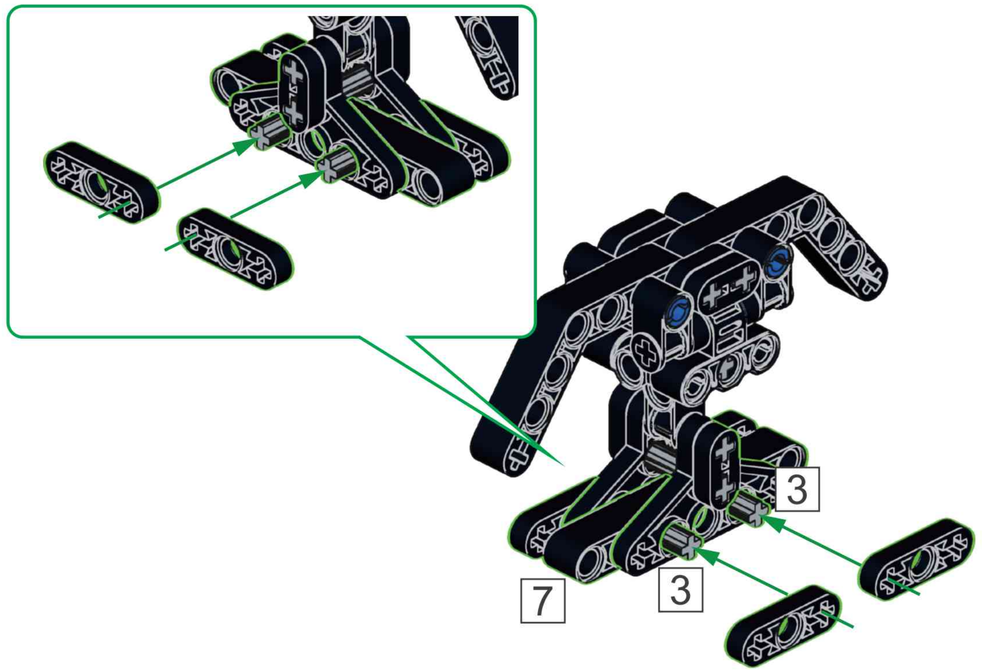

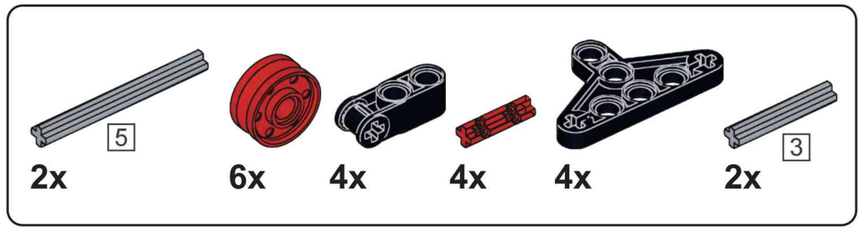

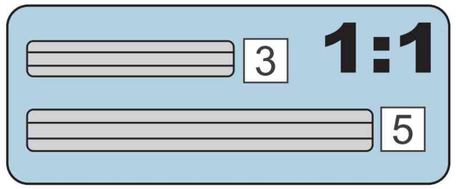

T24

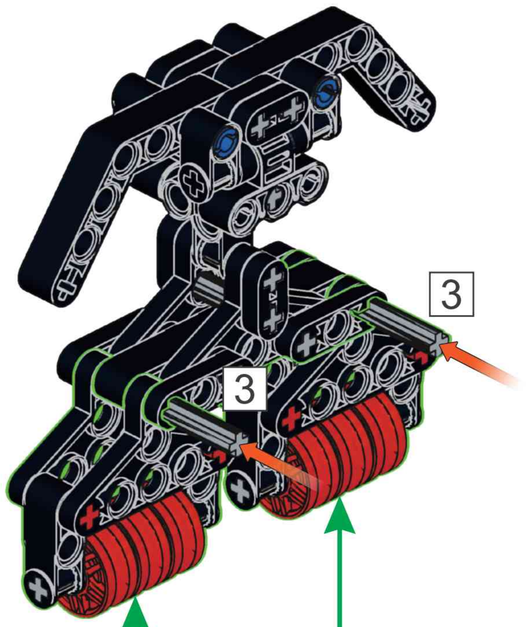

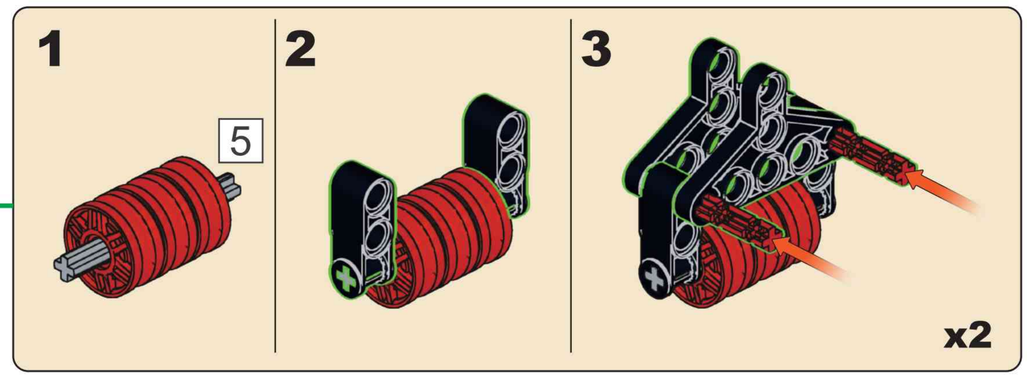

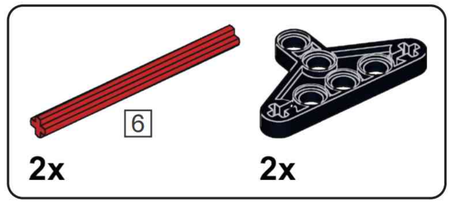

T25

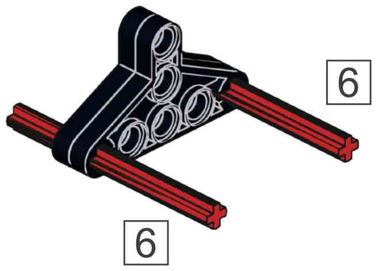

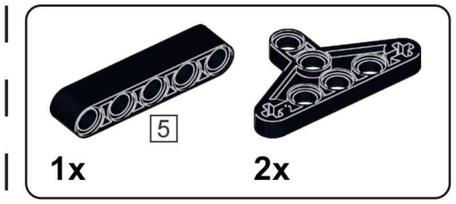

T26

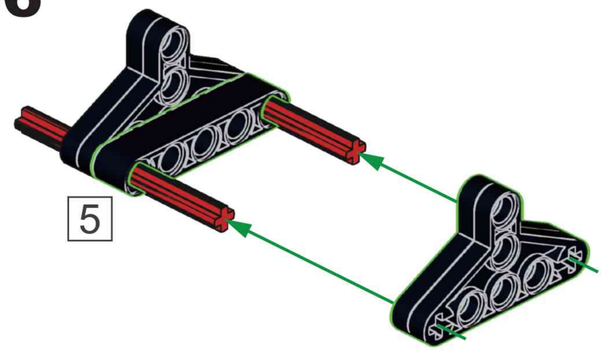

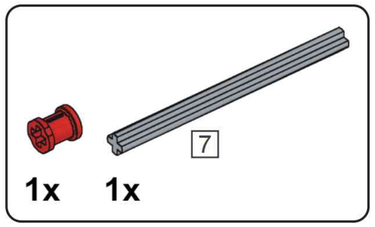

T27

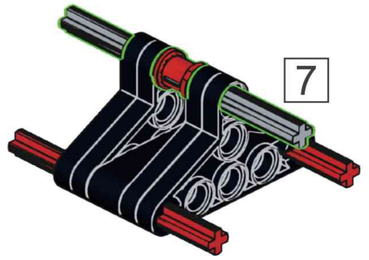

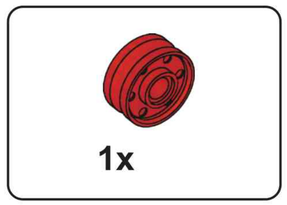

T28

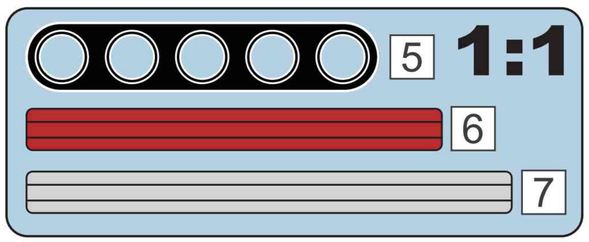

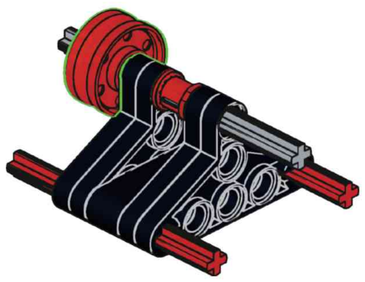

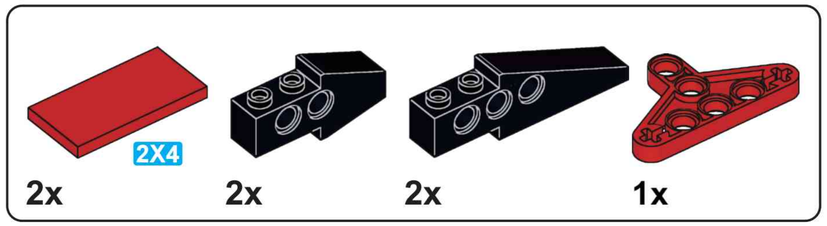

T29

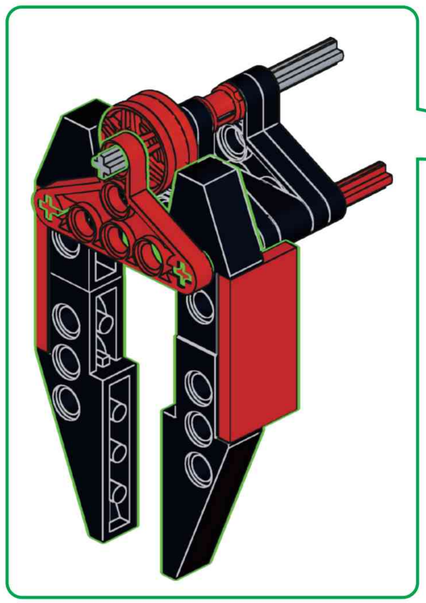

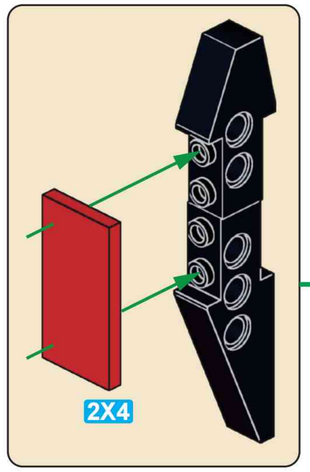

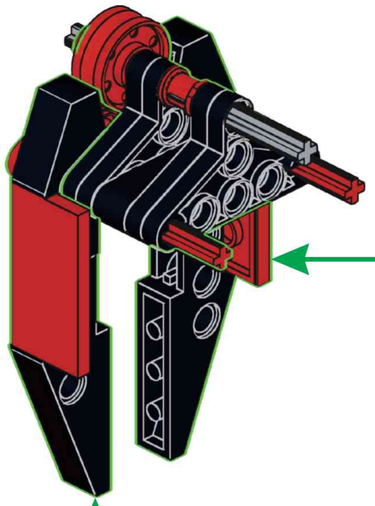

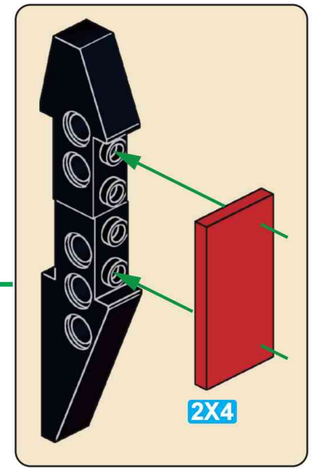

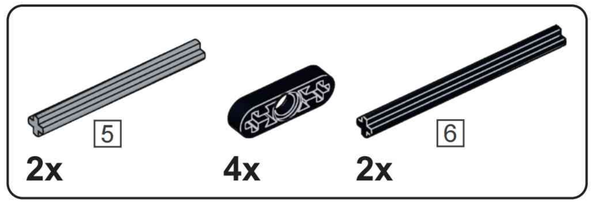

T30

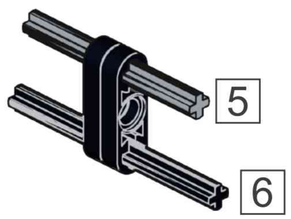

x2

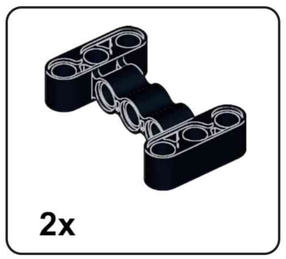

T31

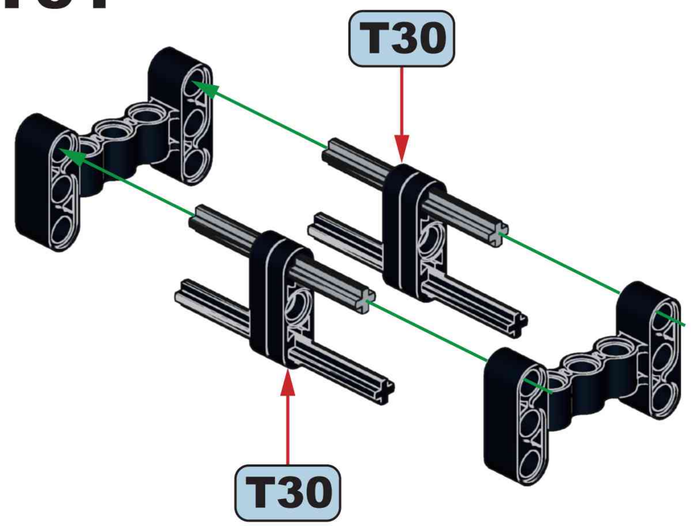

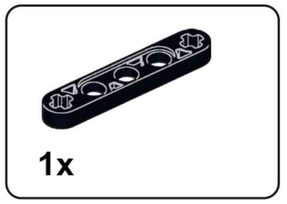

T32

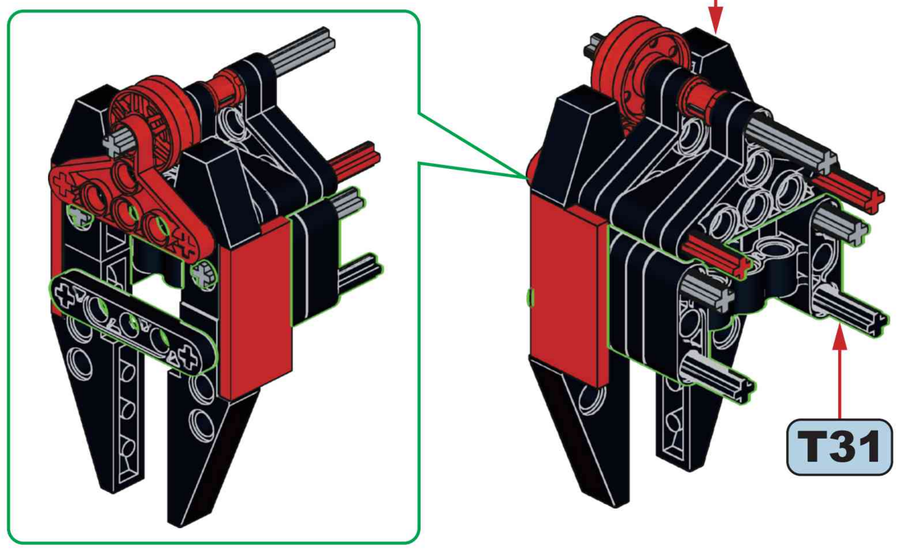

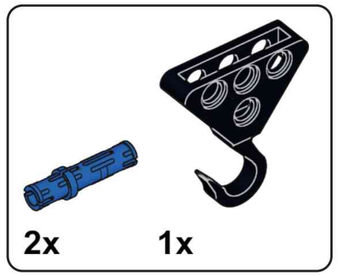

T33

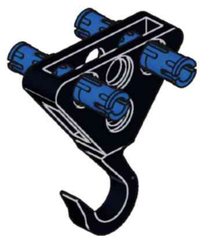

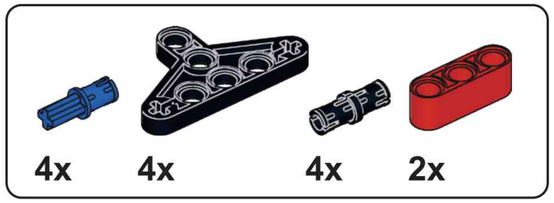

T34



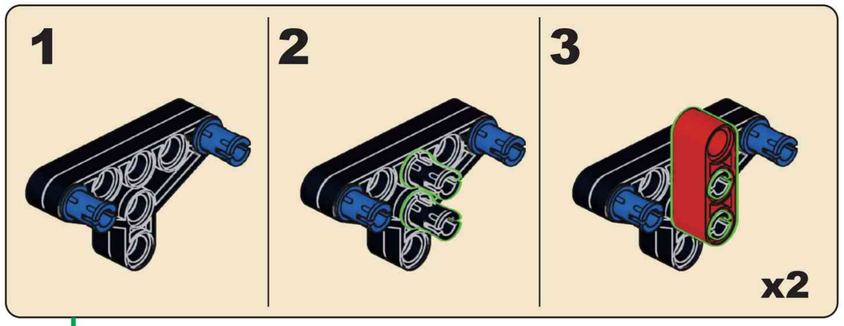

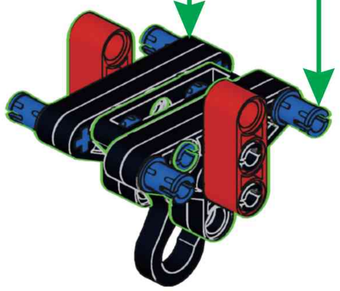

T35

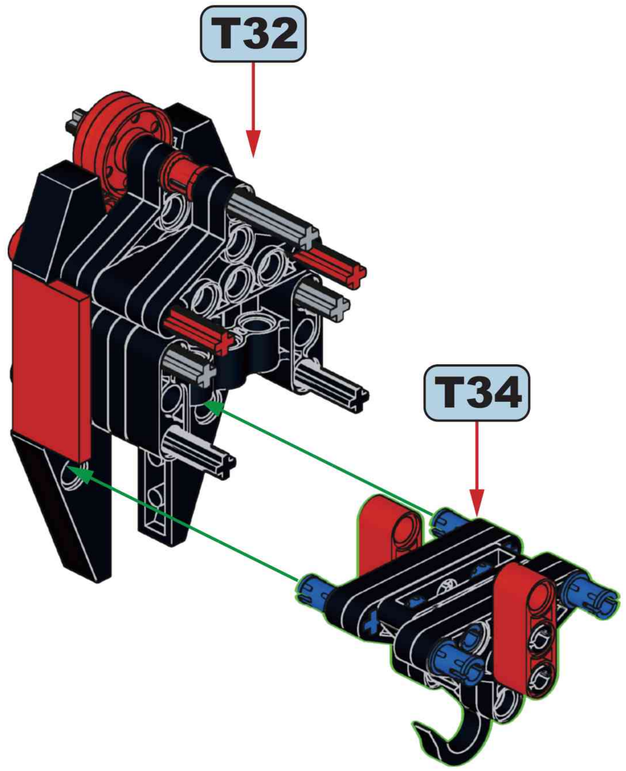

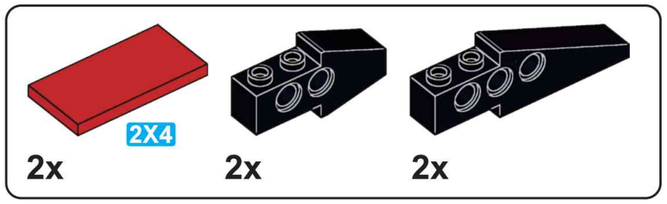

T36

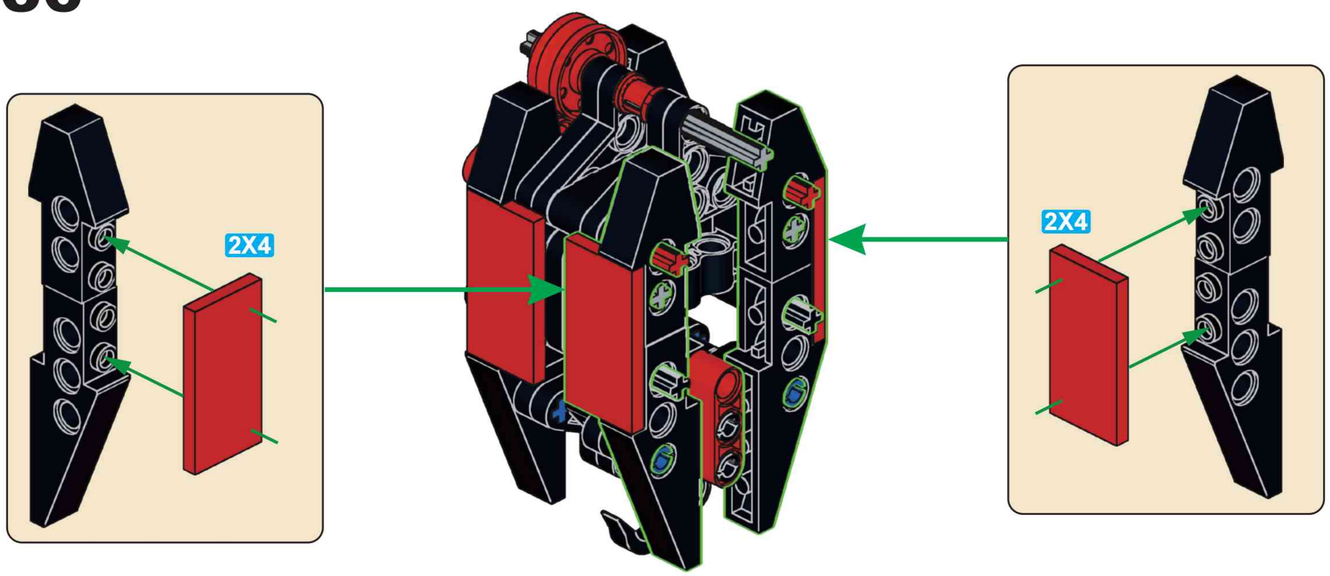

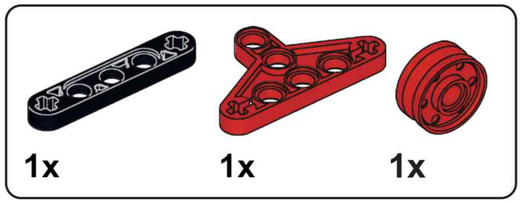

T37

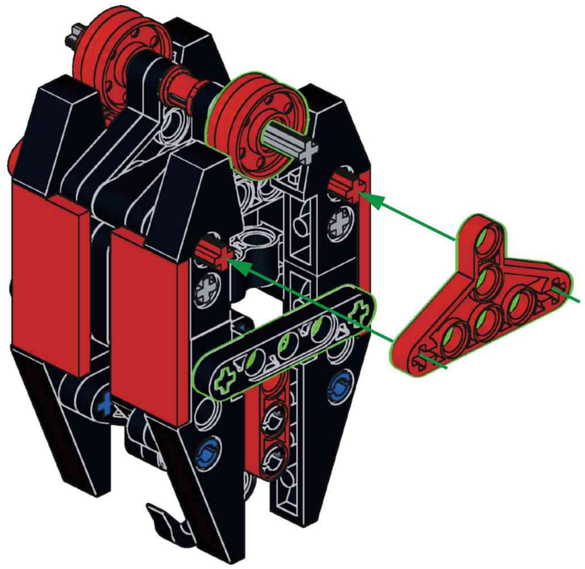

T38

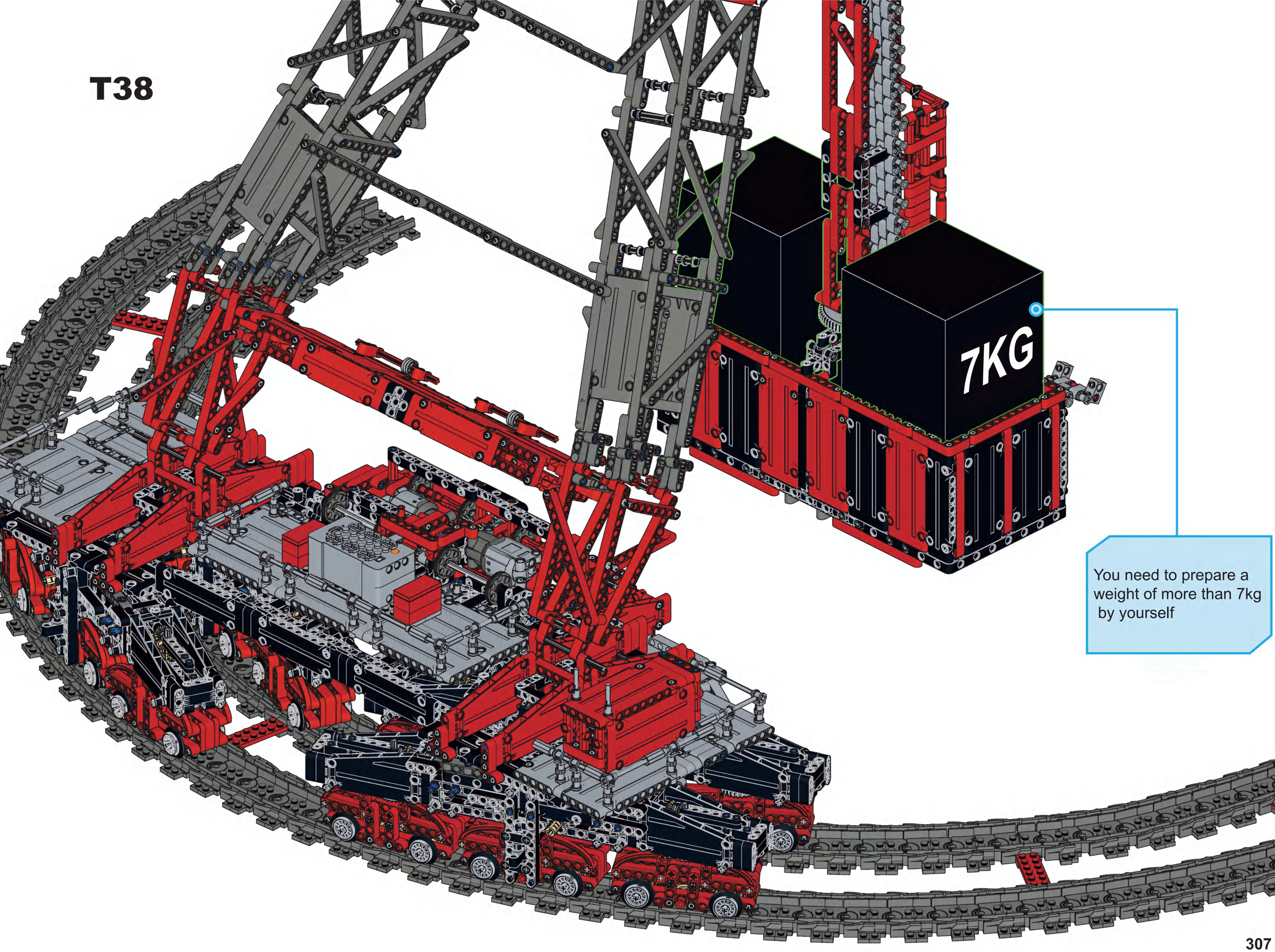

You need to prepare a weight of more than 7kg by yourself

T39

T38

T12

M55

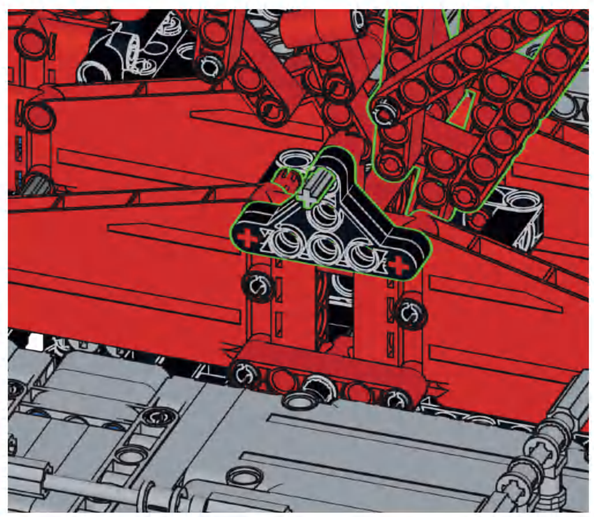

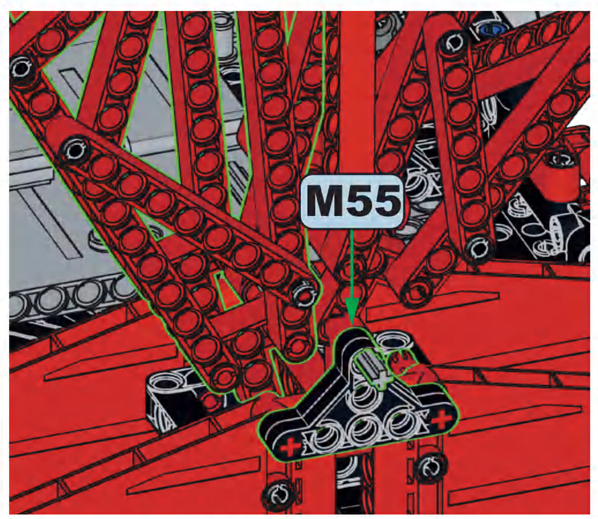

1

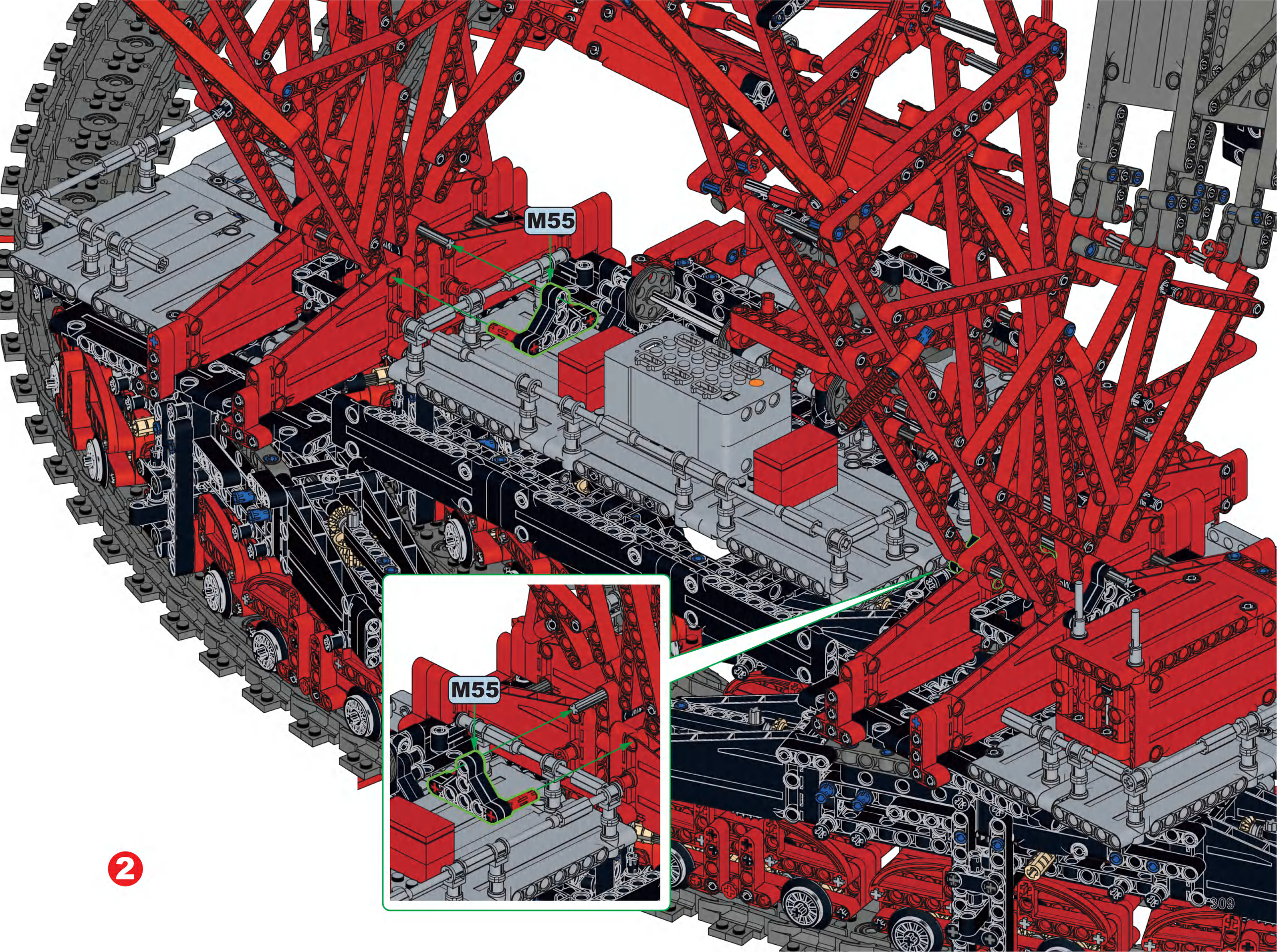

2

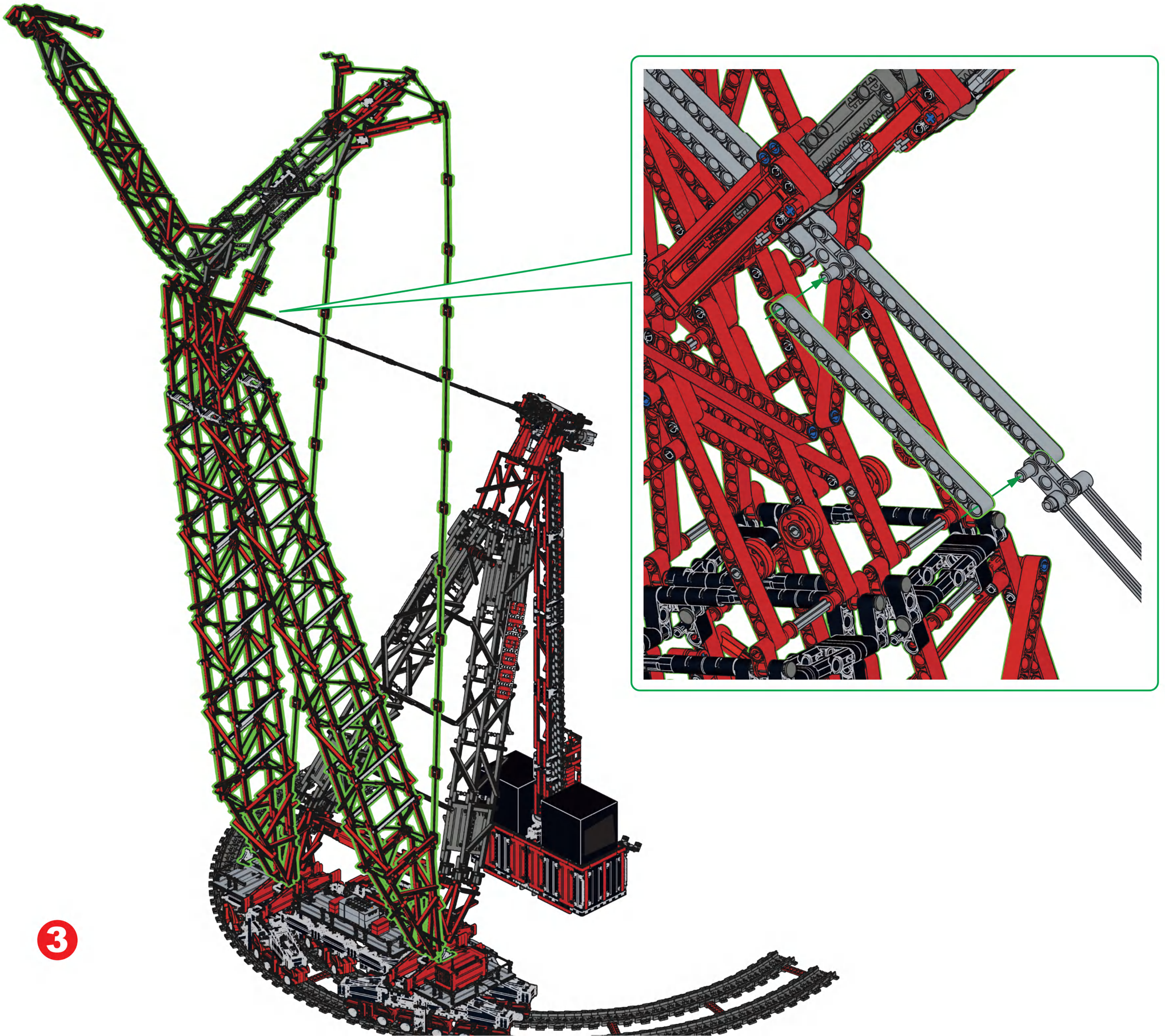

1x

T40

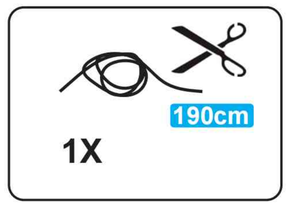

T41



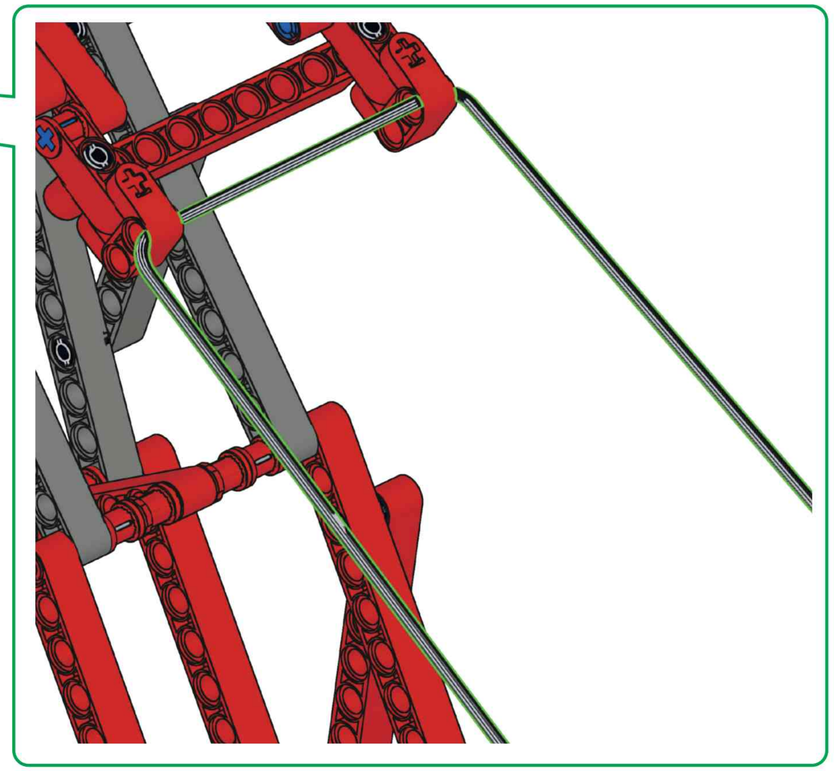

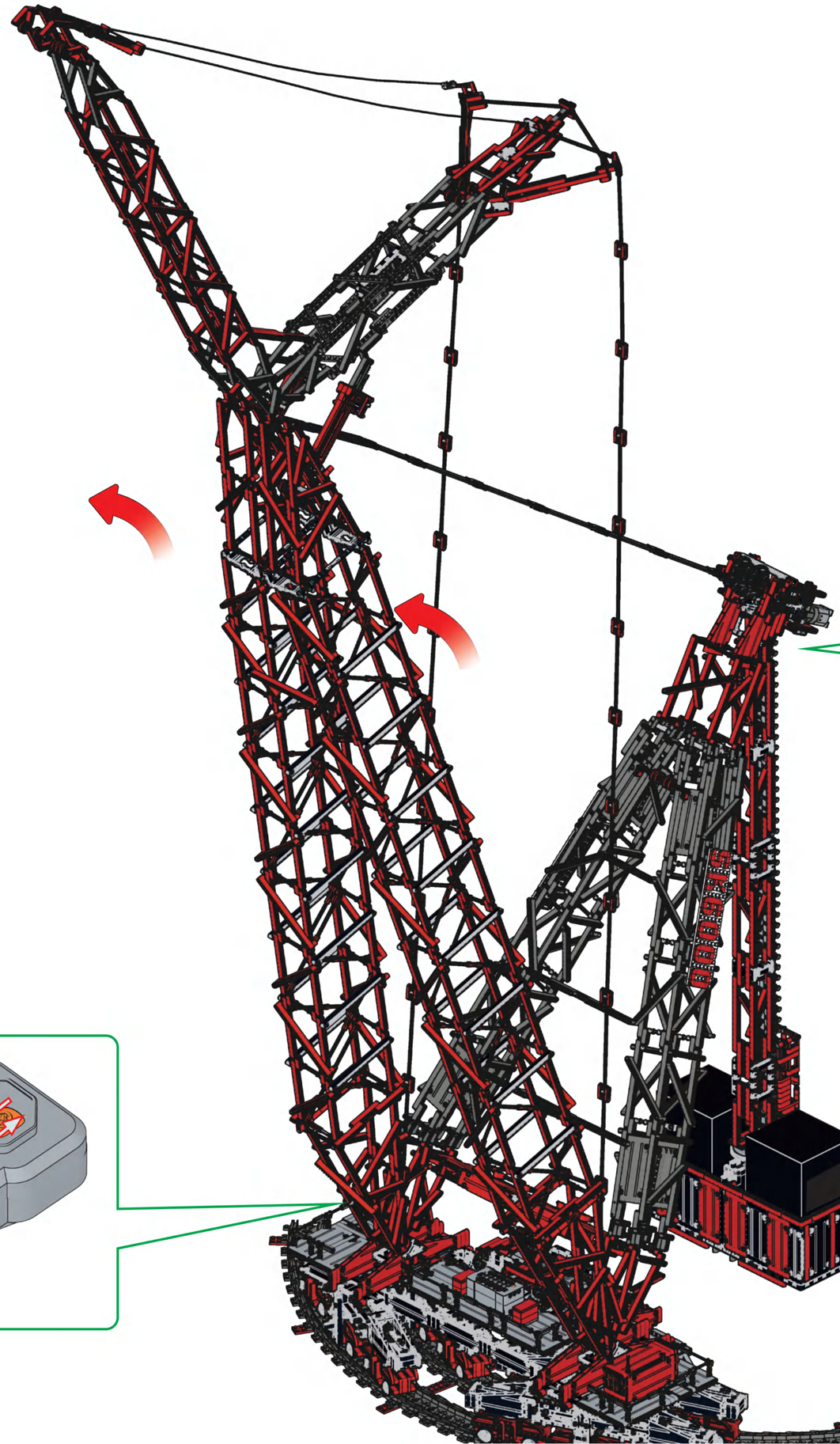

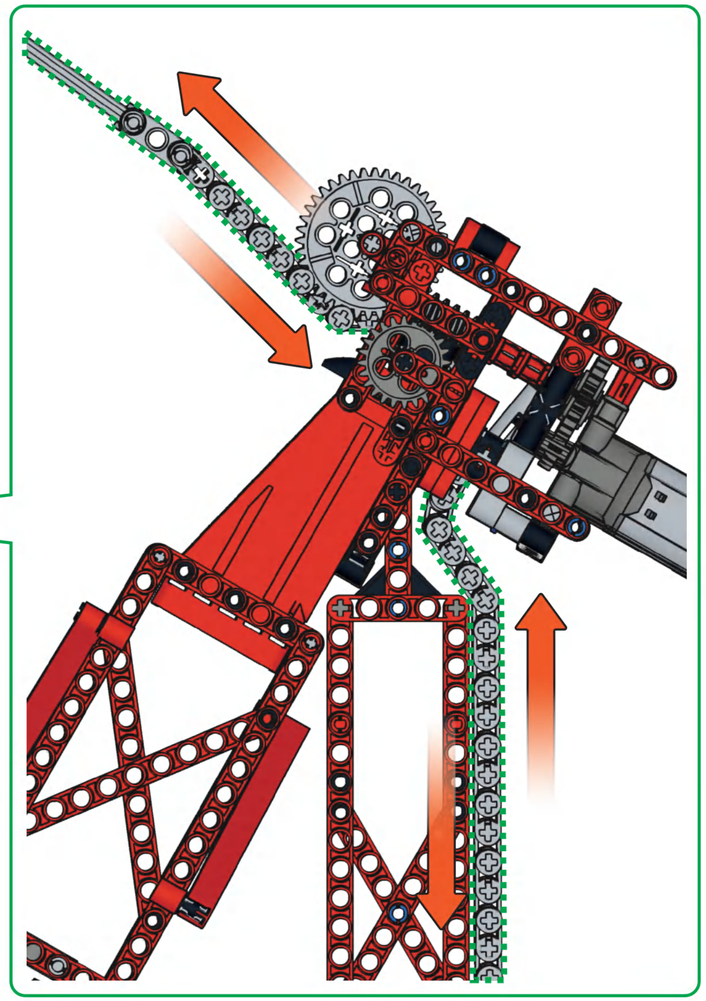

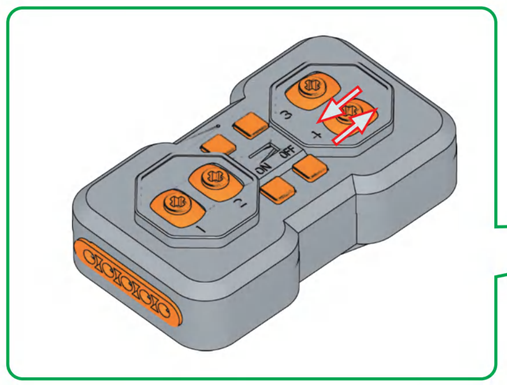

1X

2200cm

T43

1

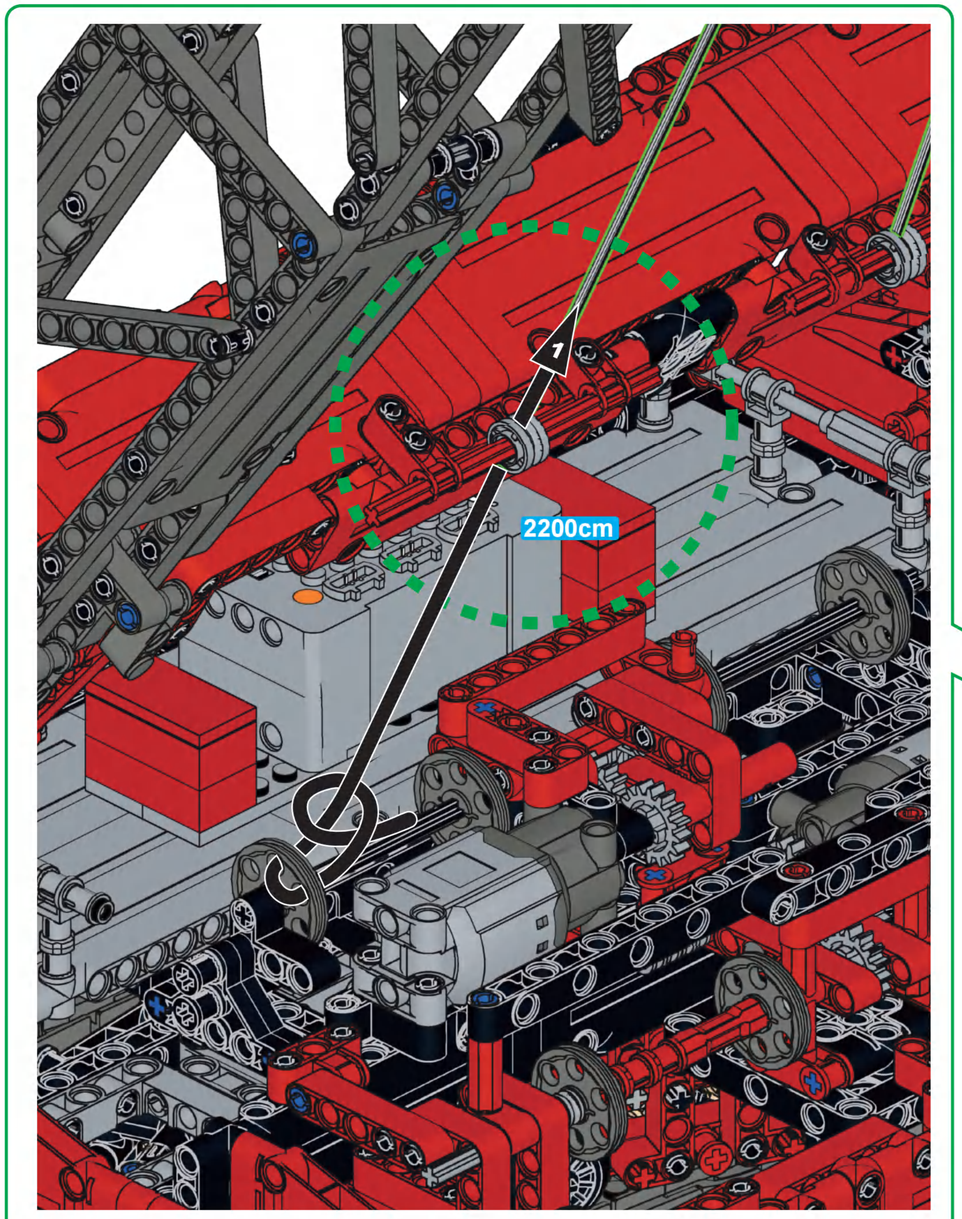

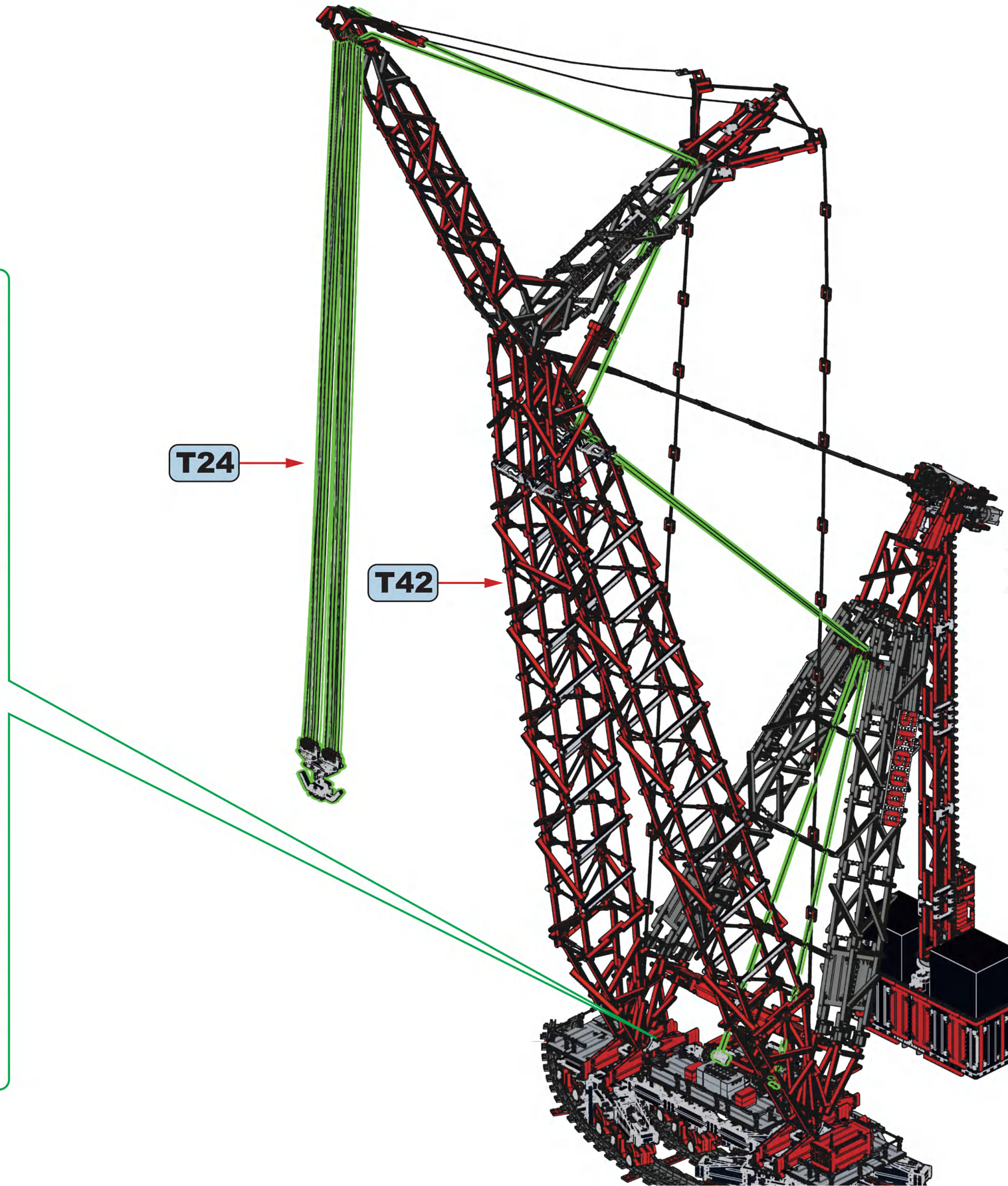

2

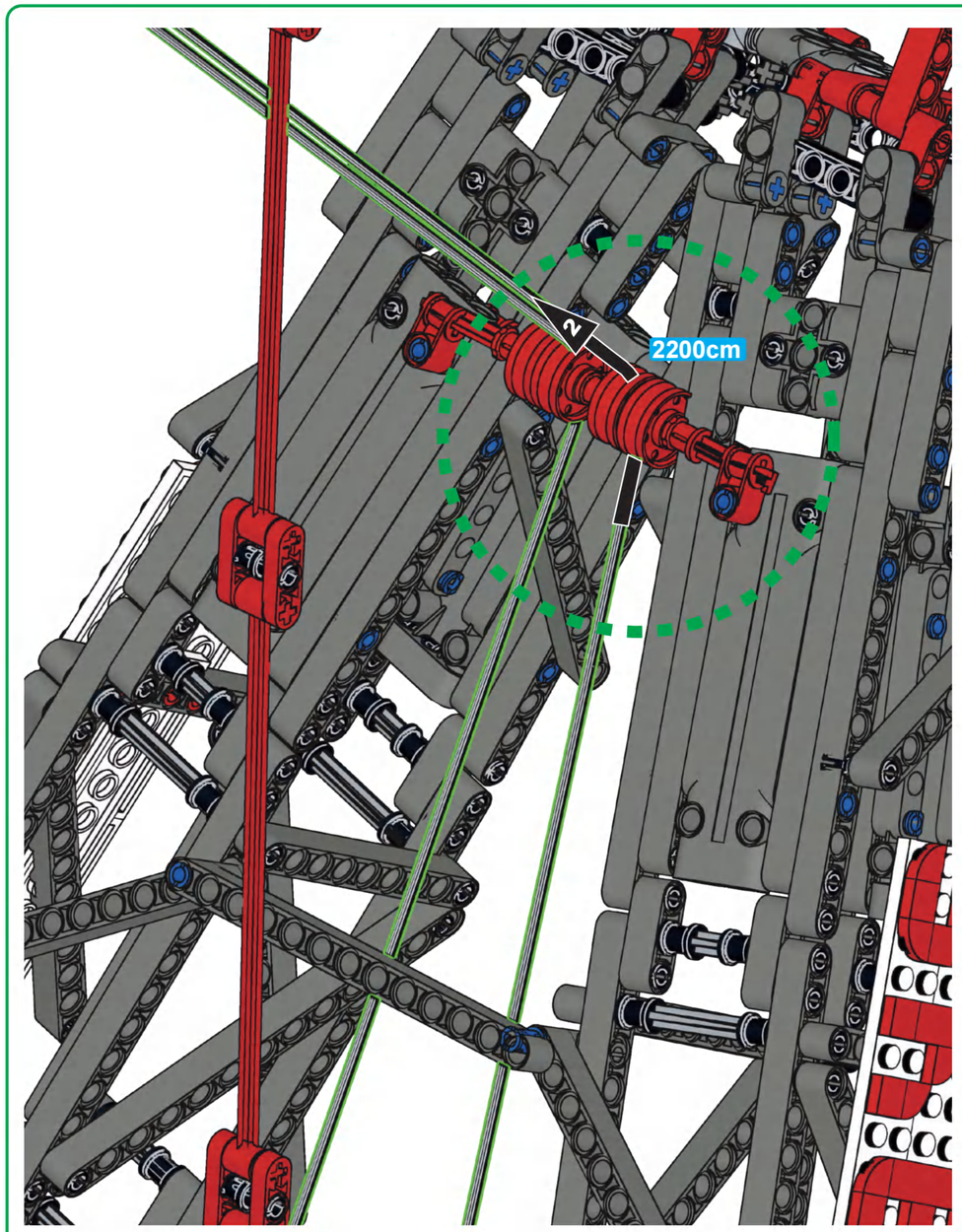

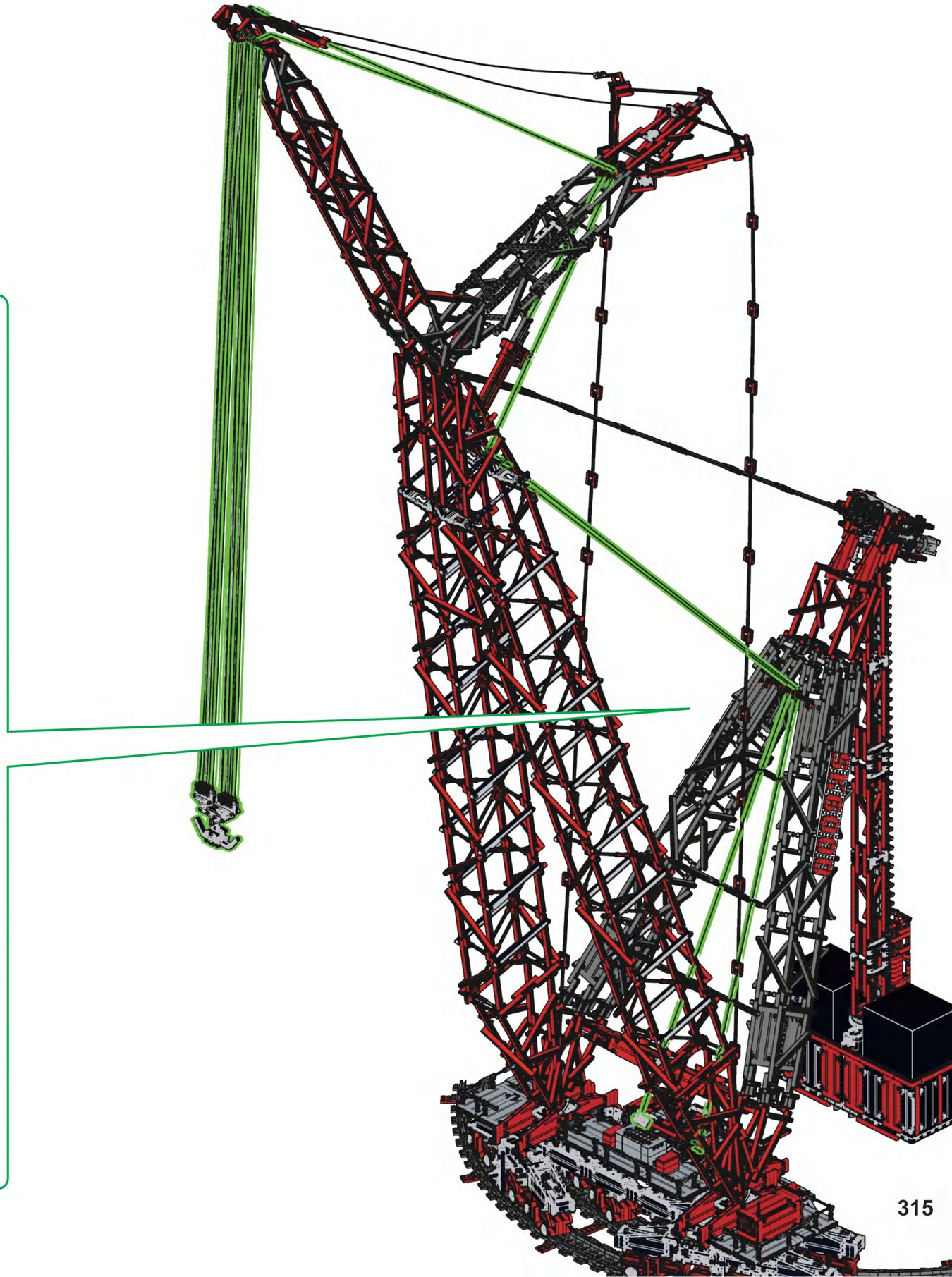

3

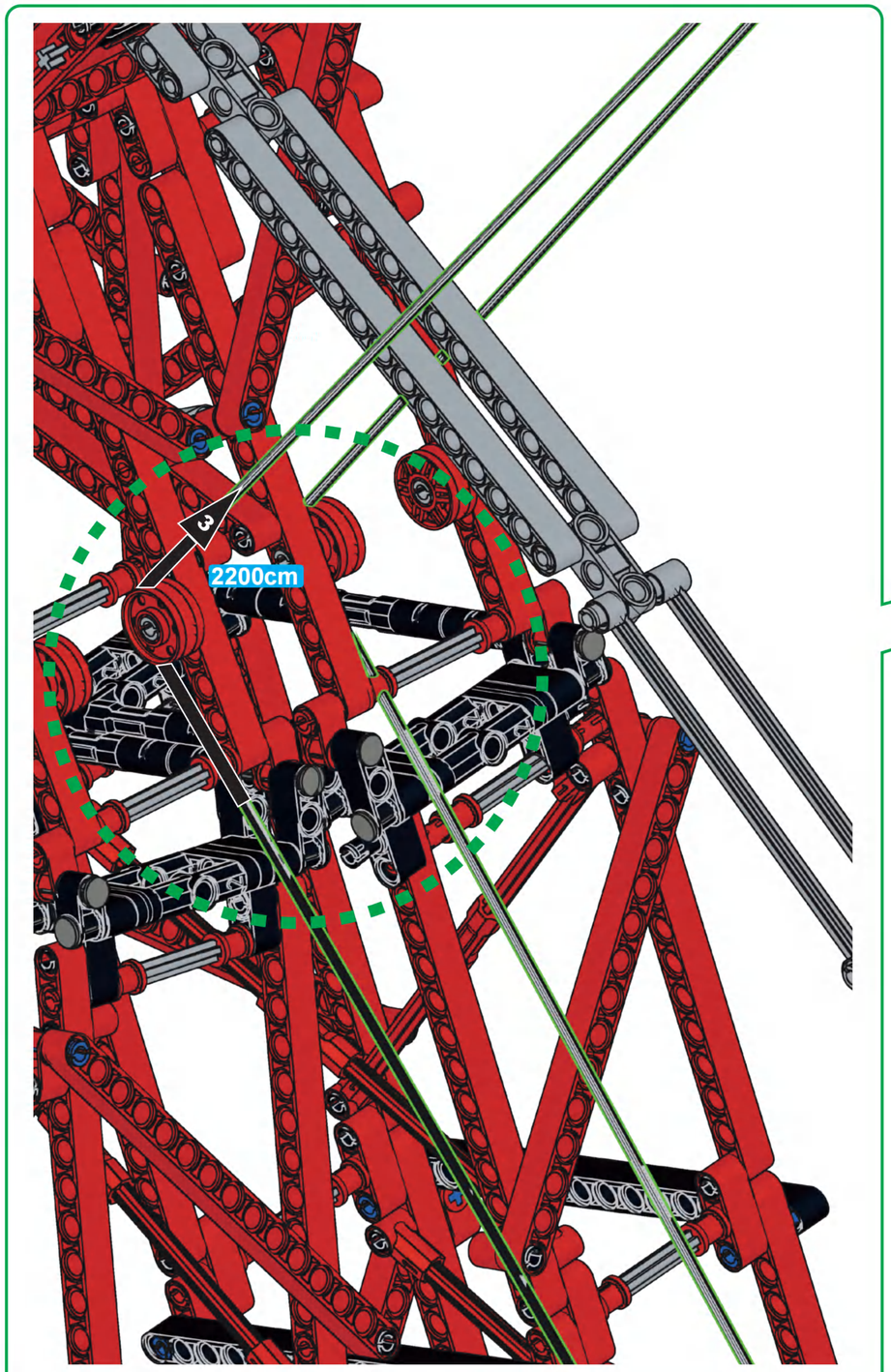

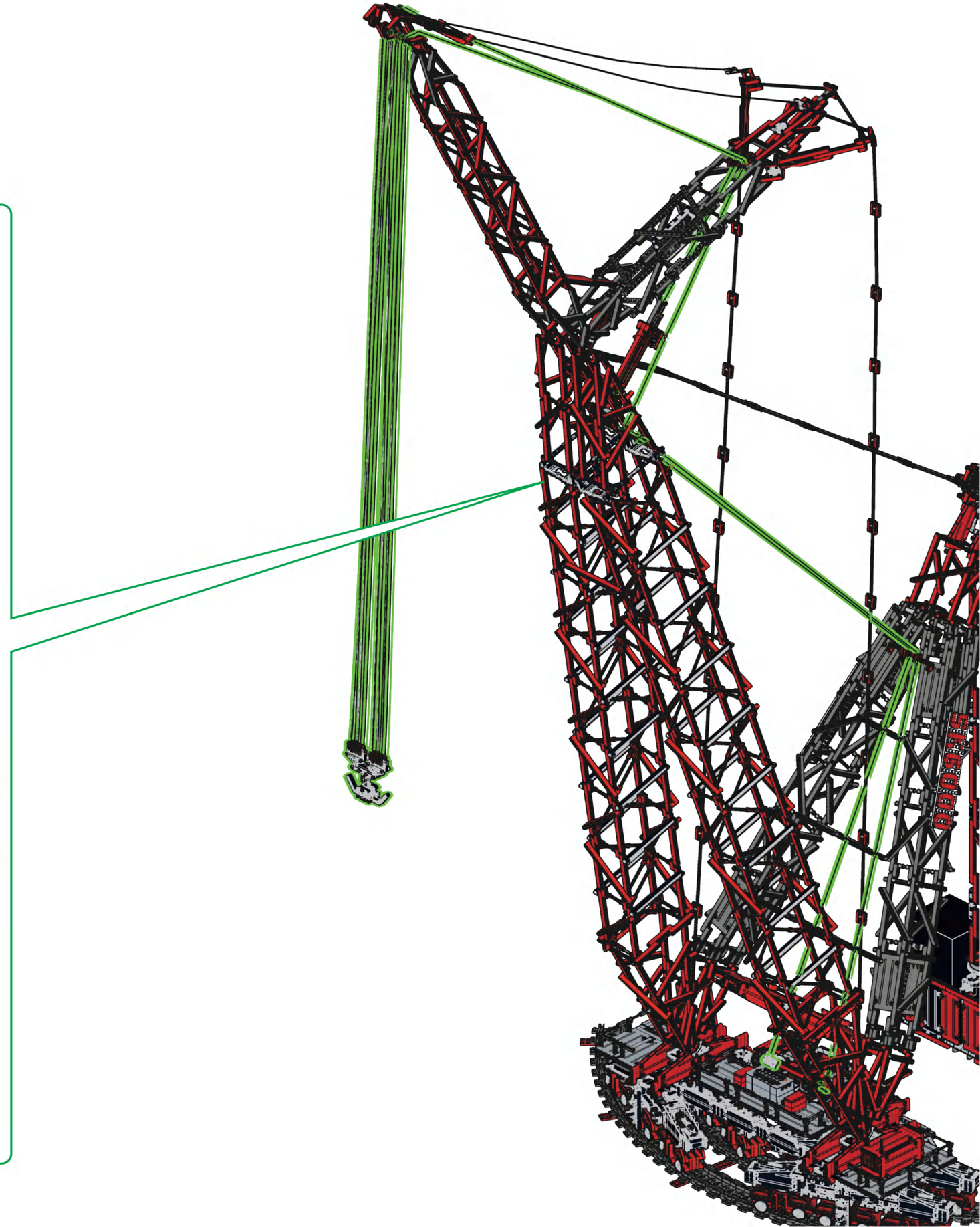

4

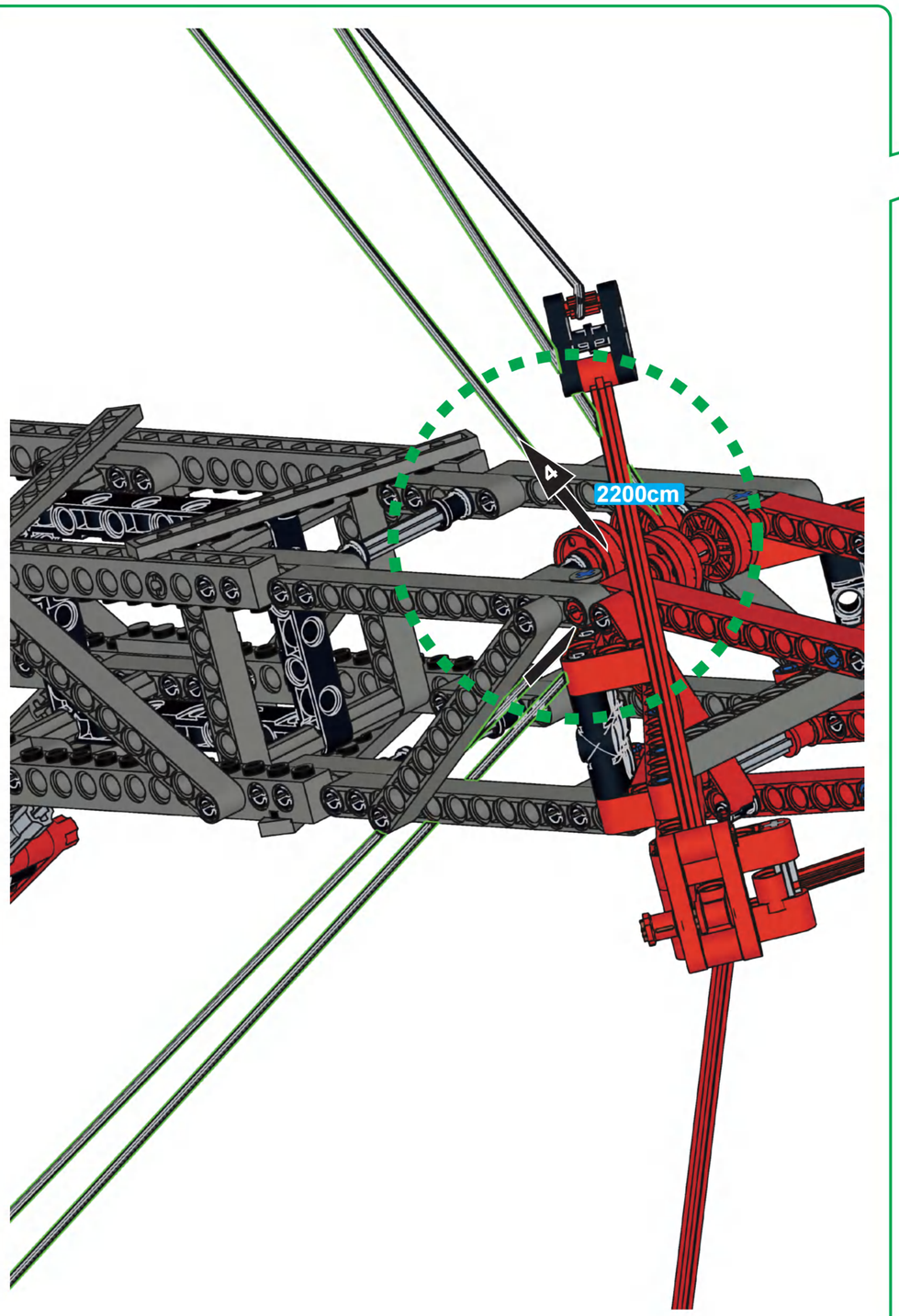



5

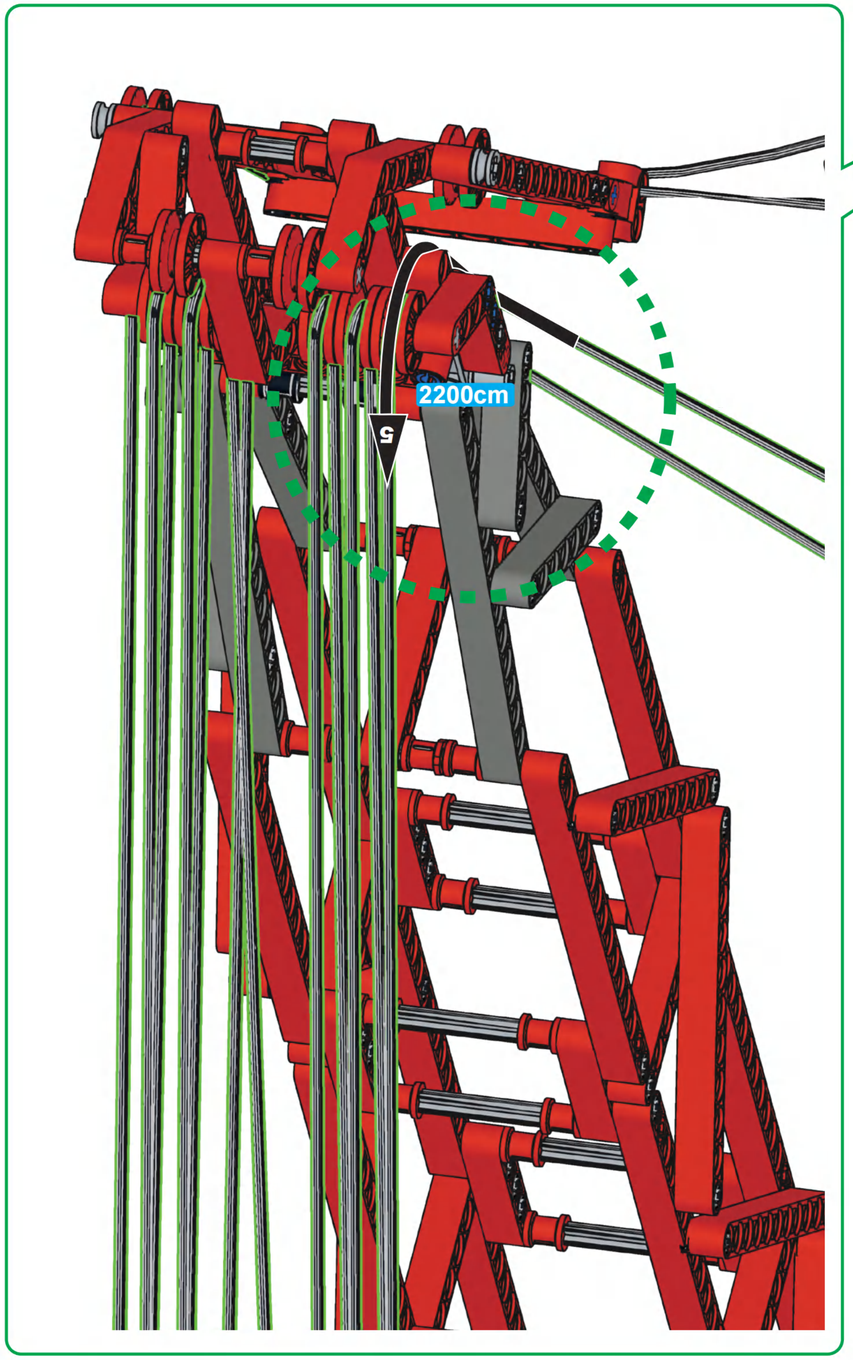

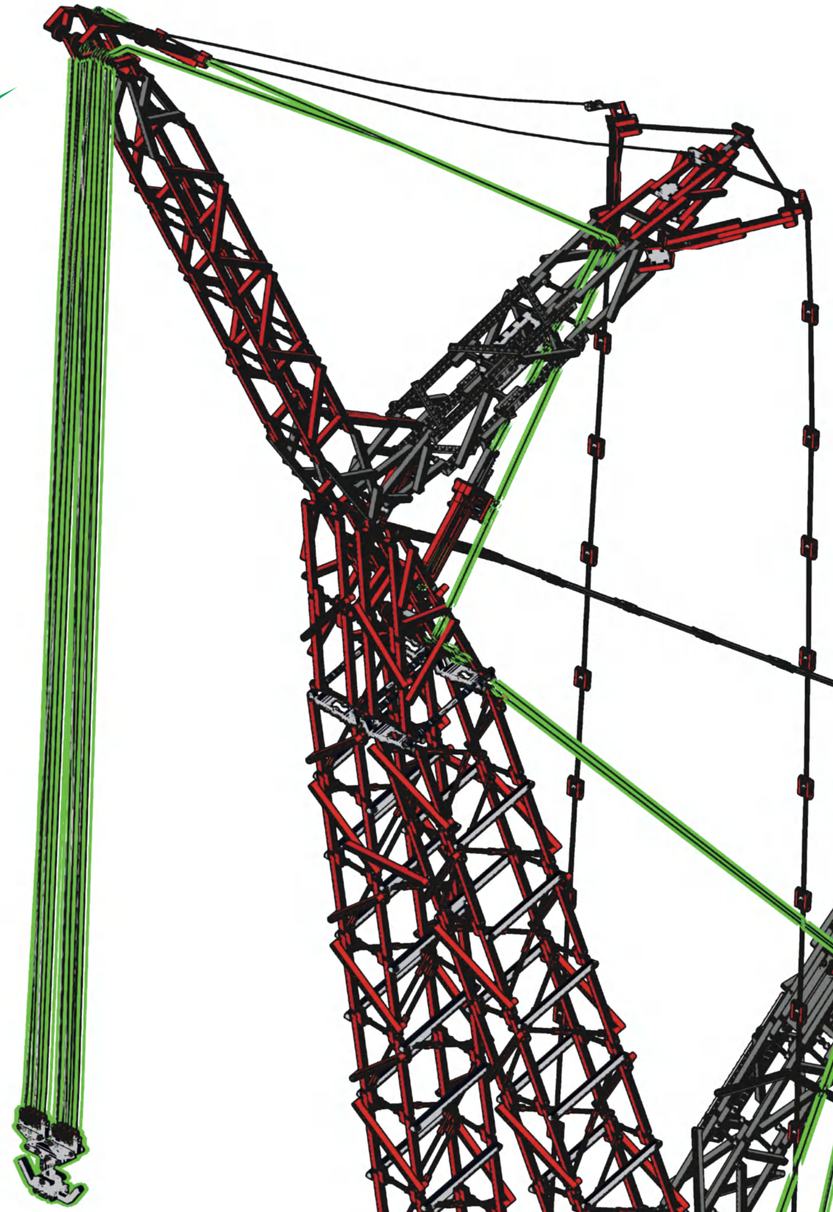

6

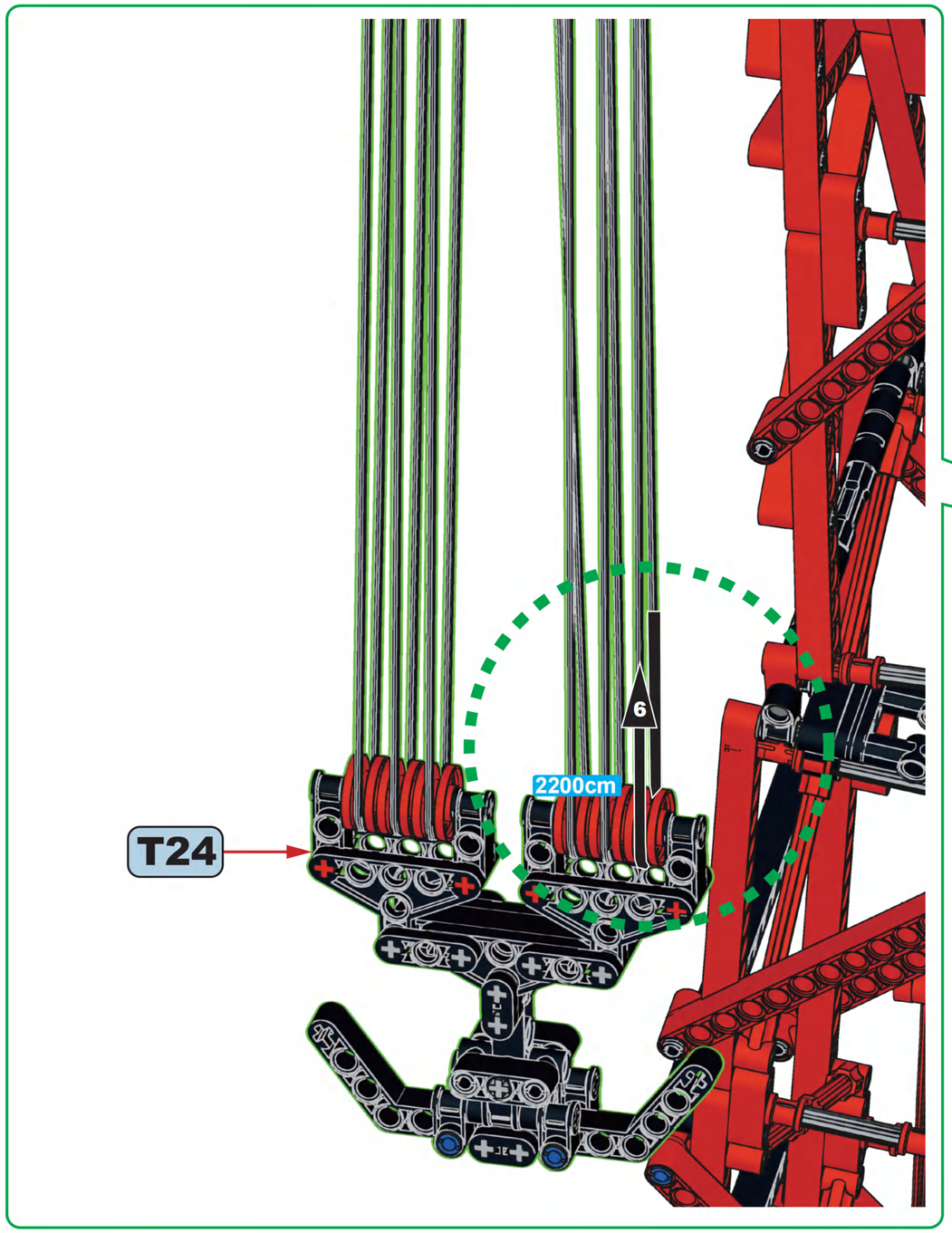

7

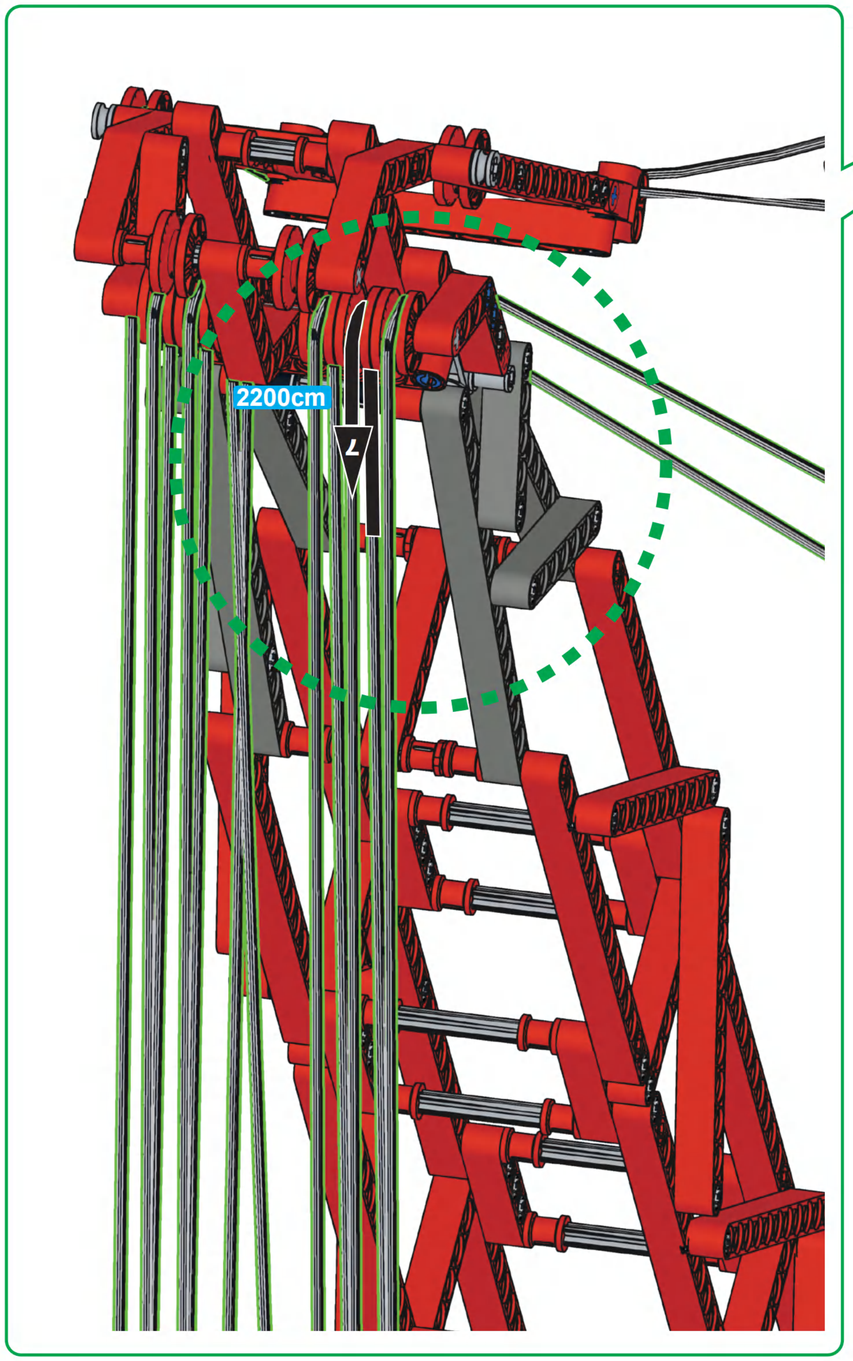

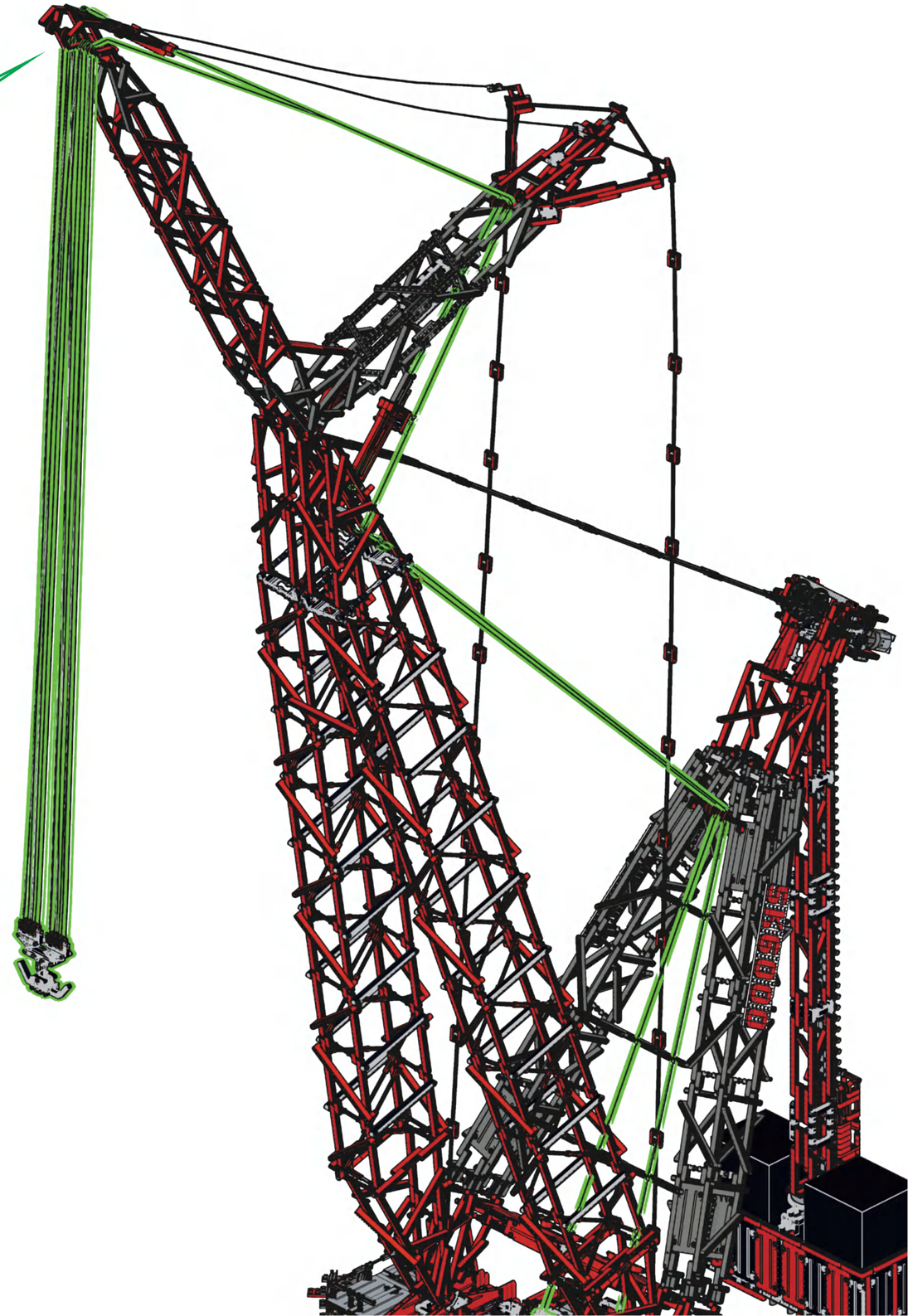

8

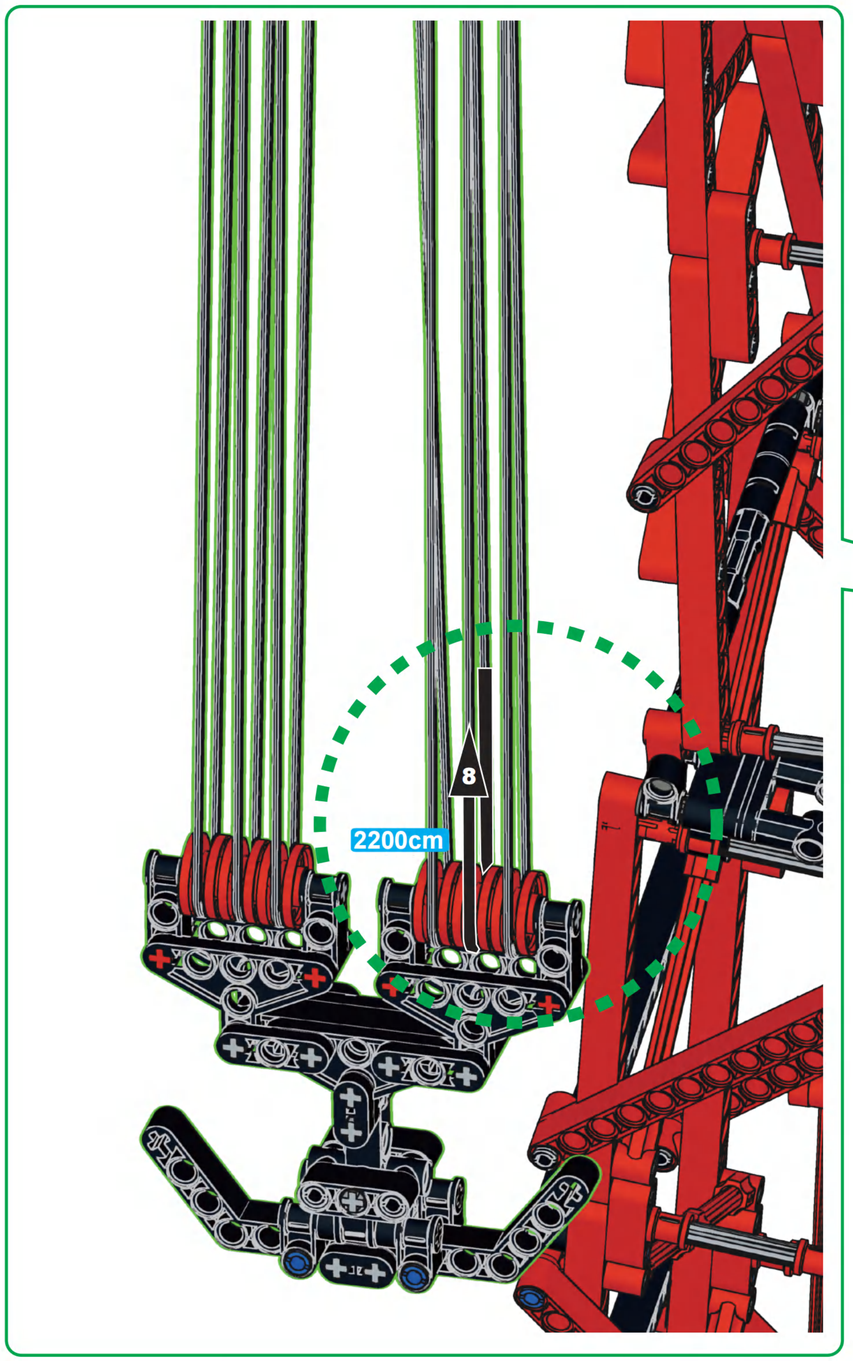

9

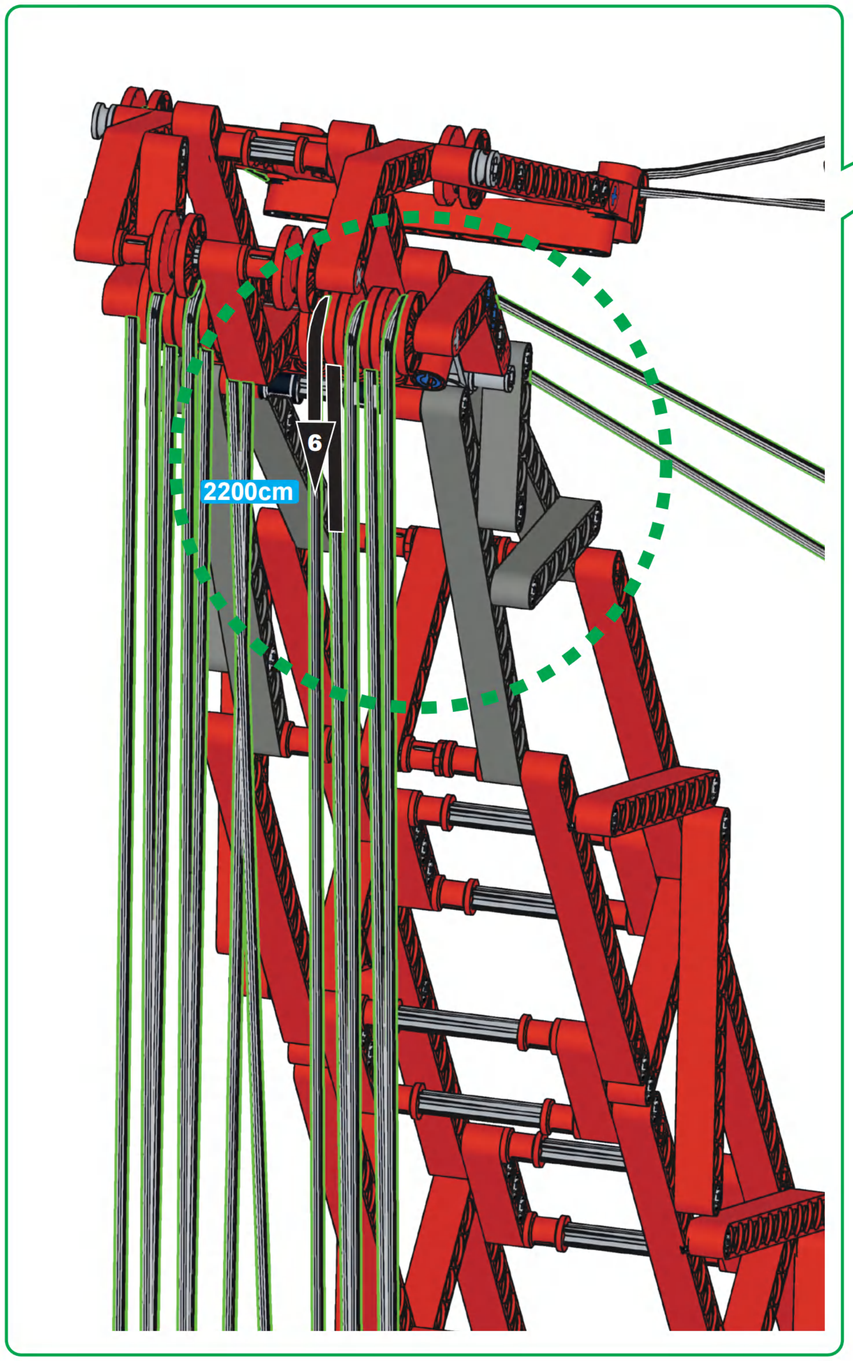

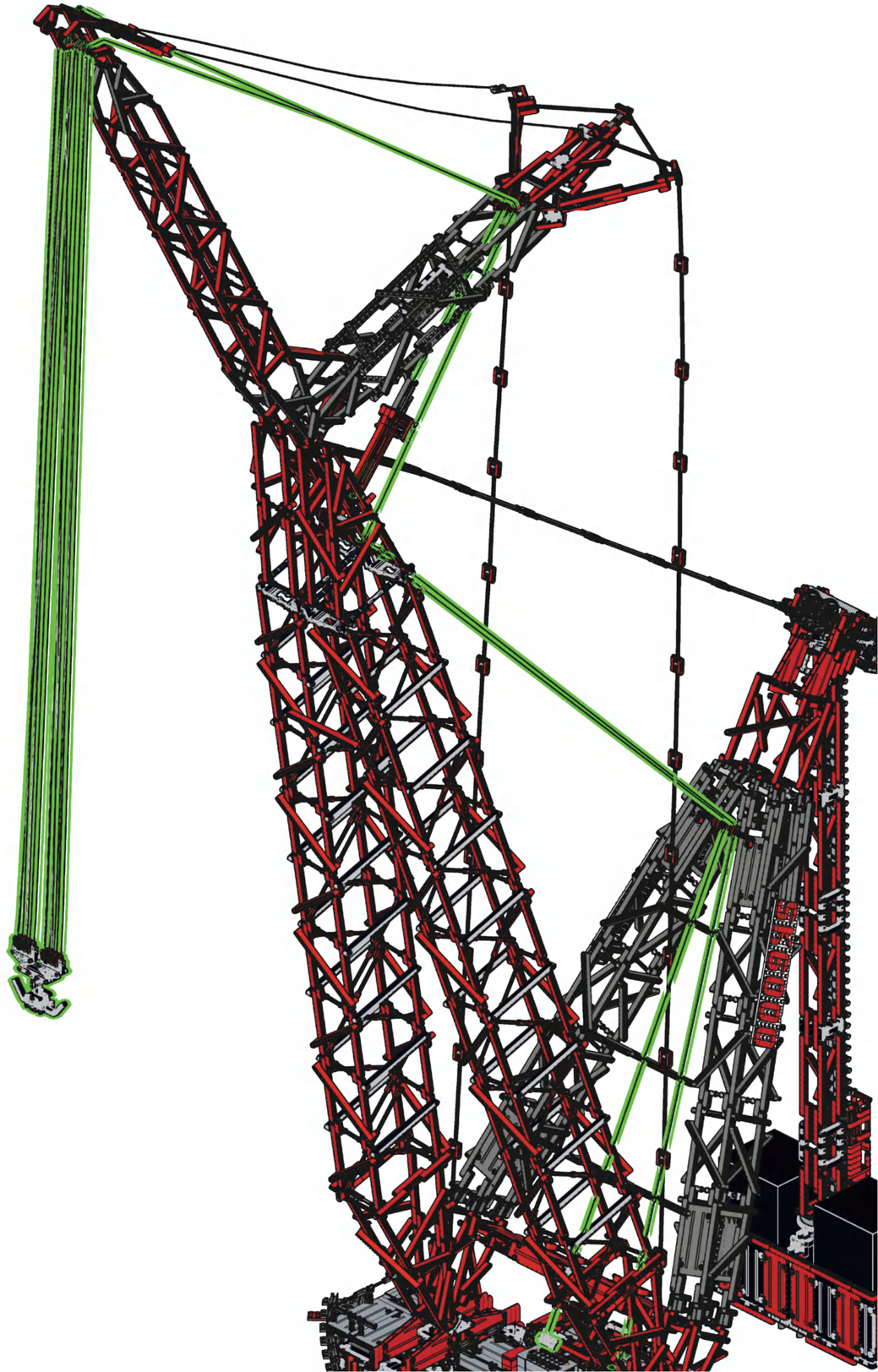

10



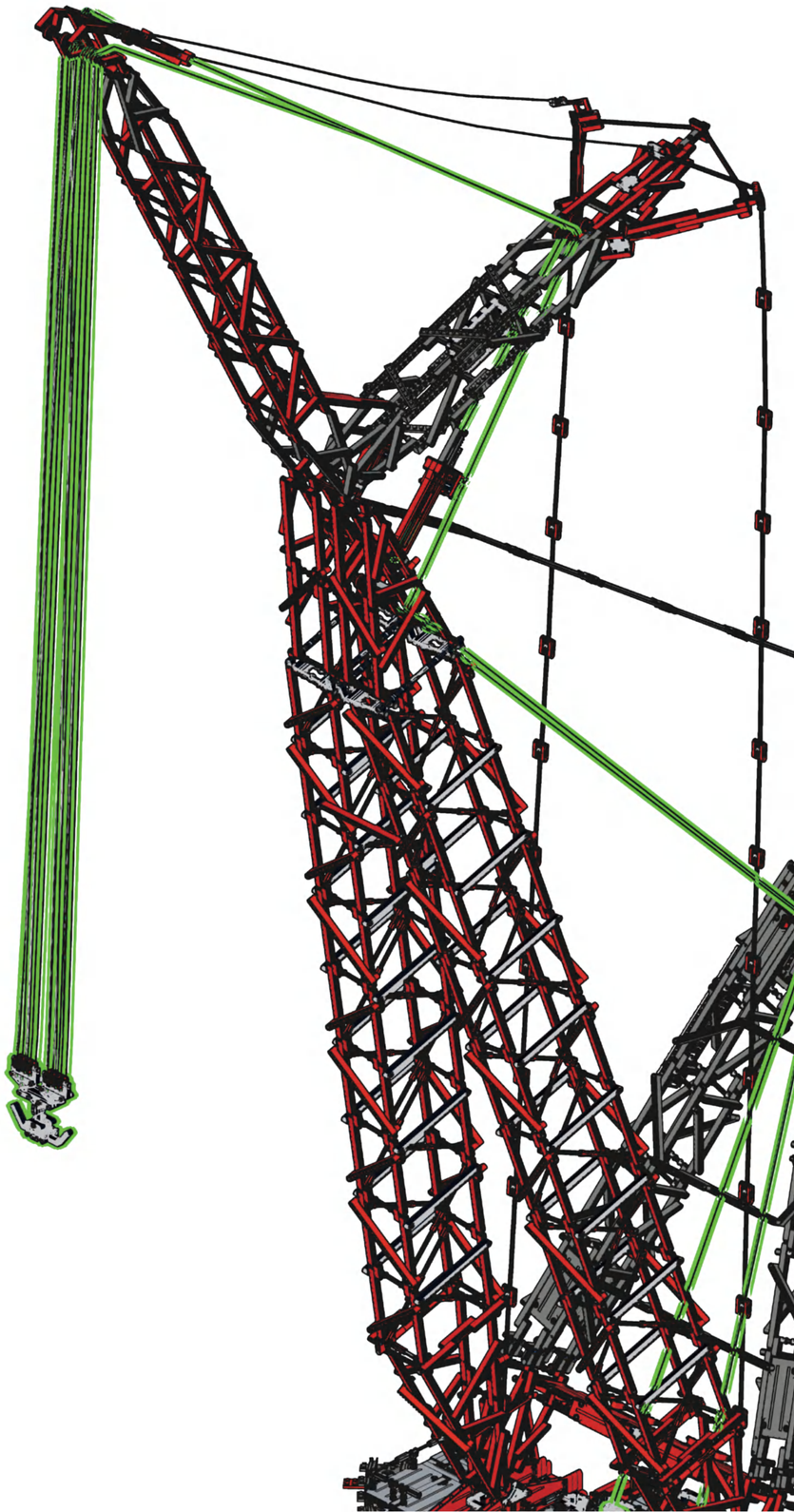

11

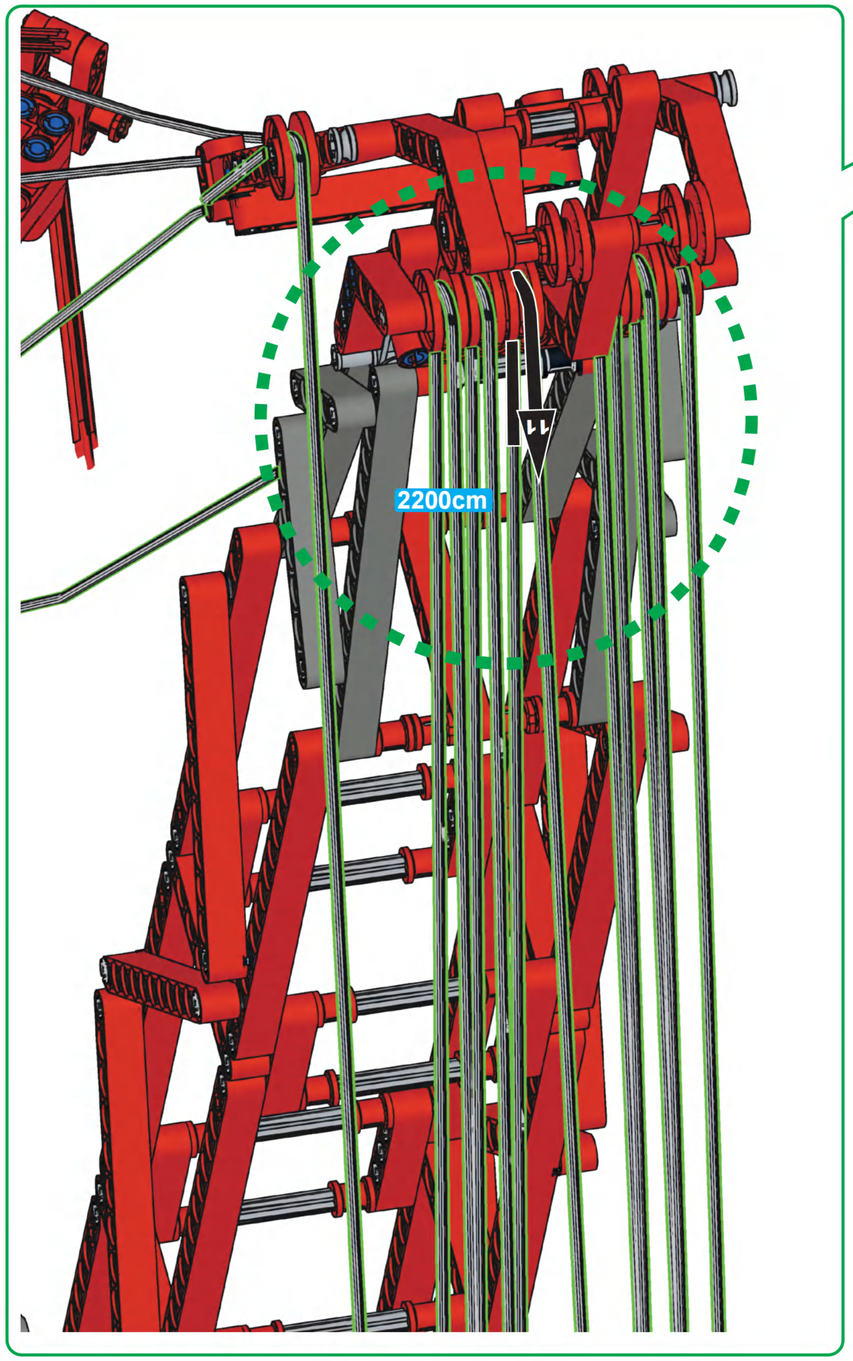

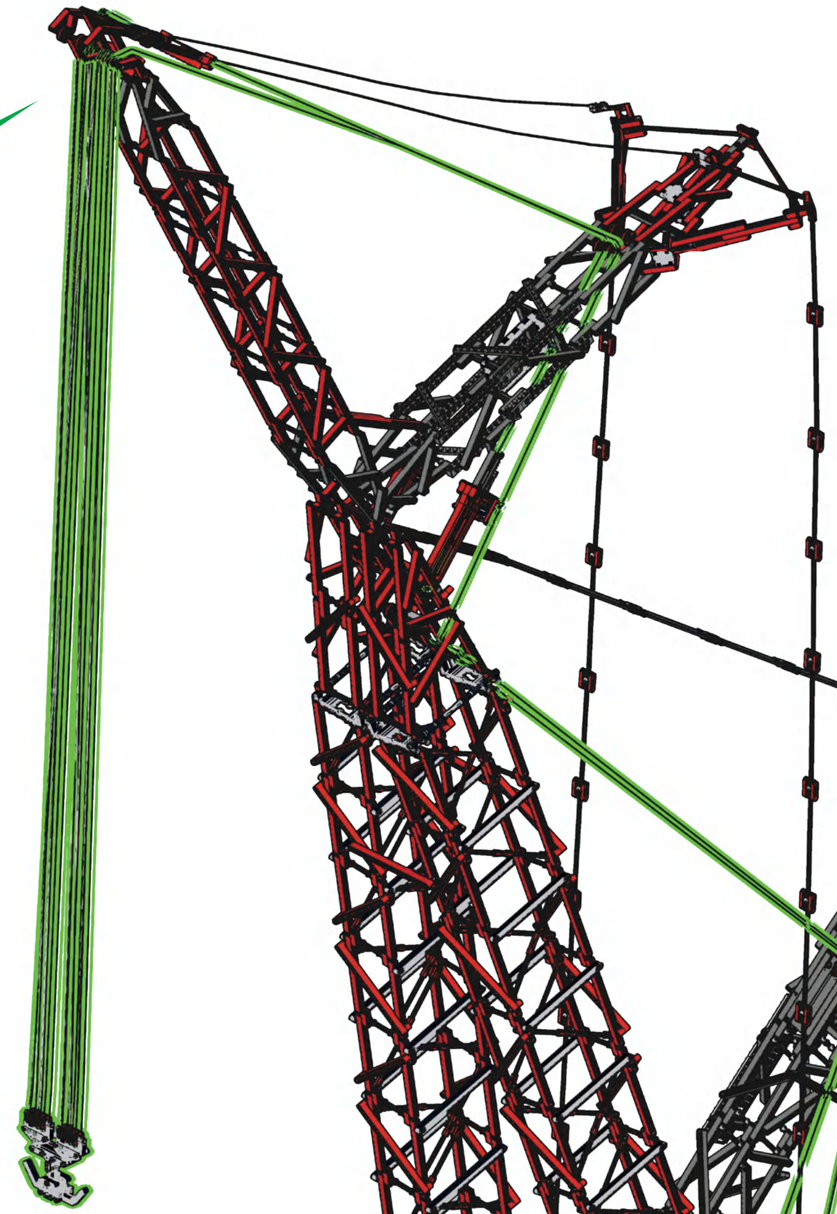

12

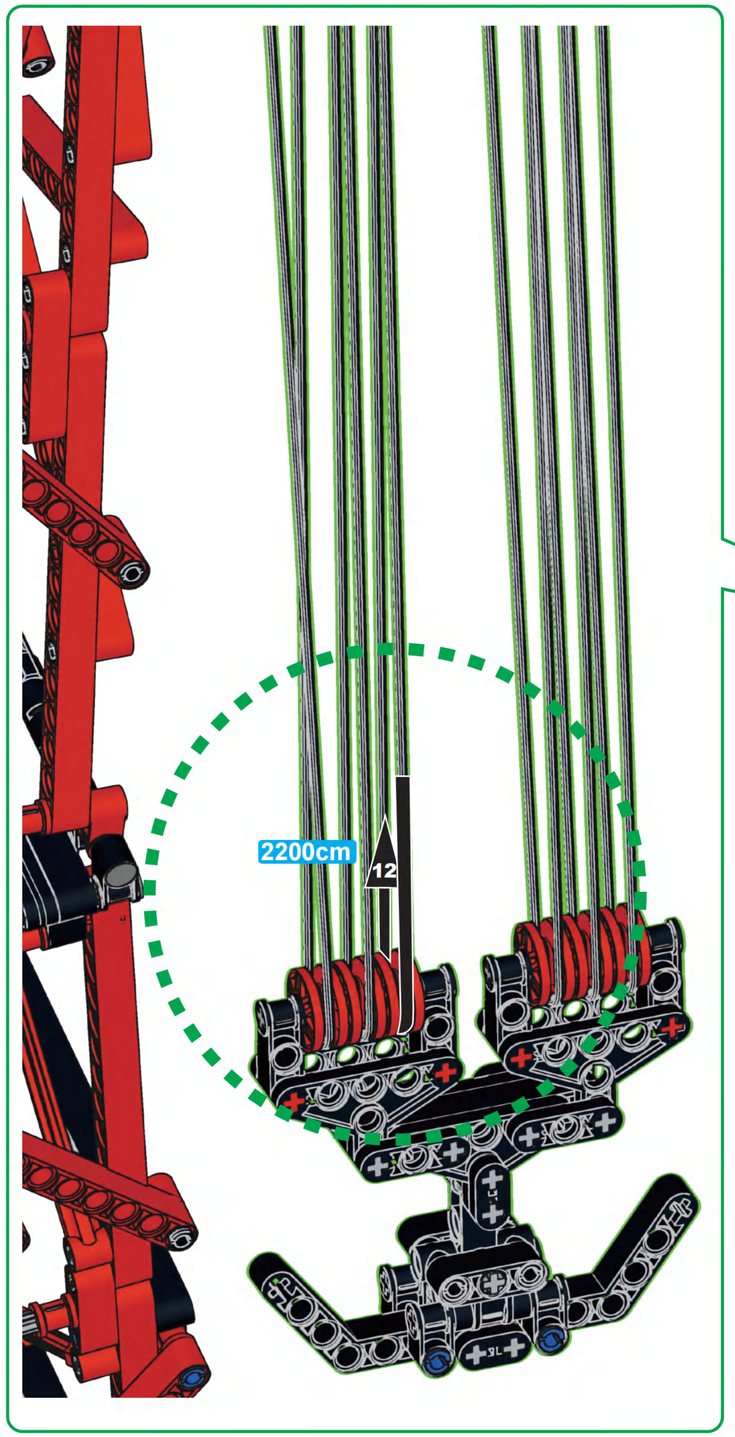

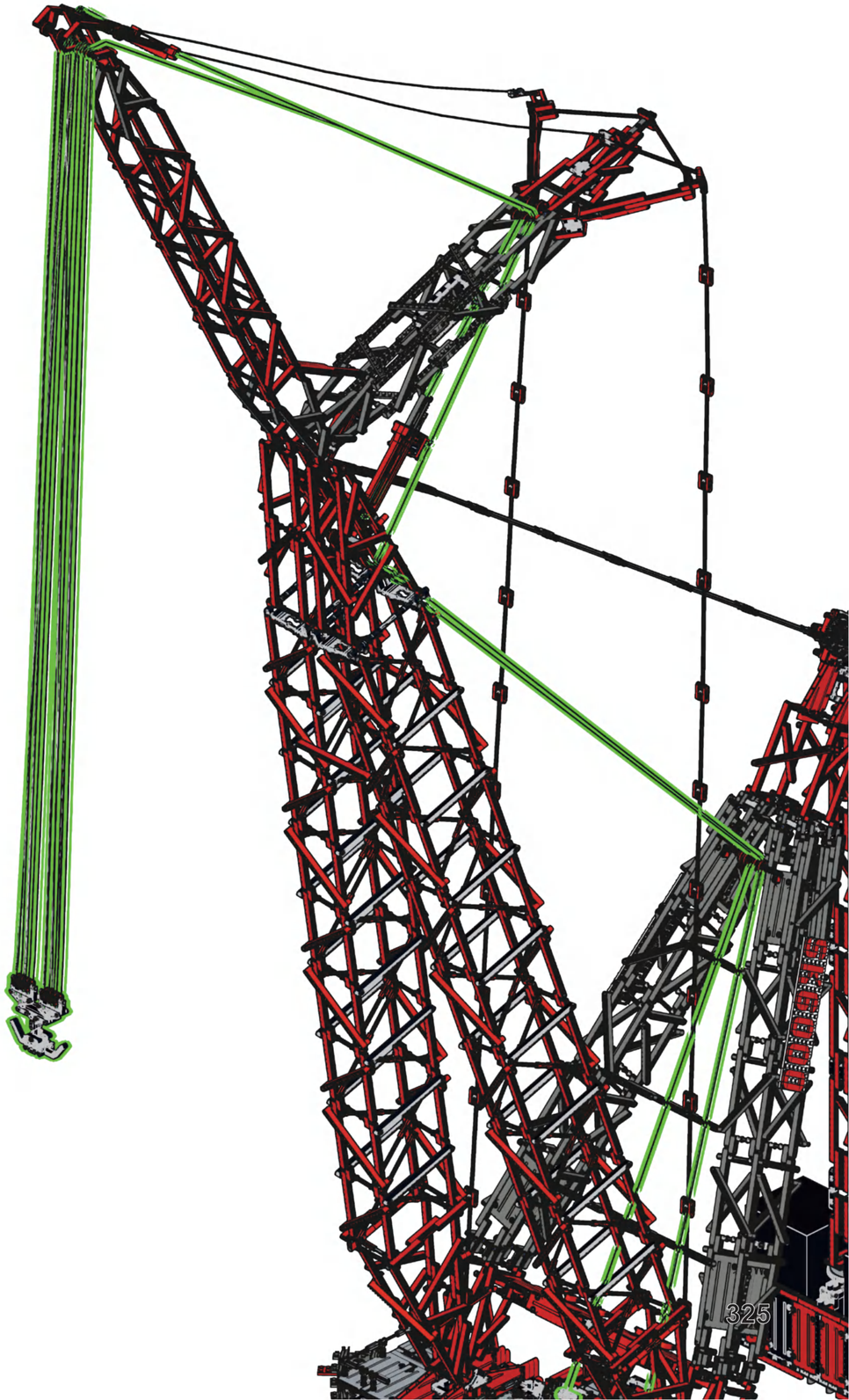

13

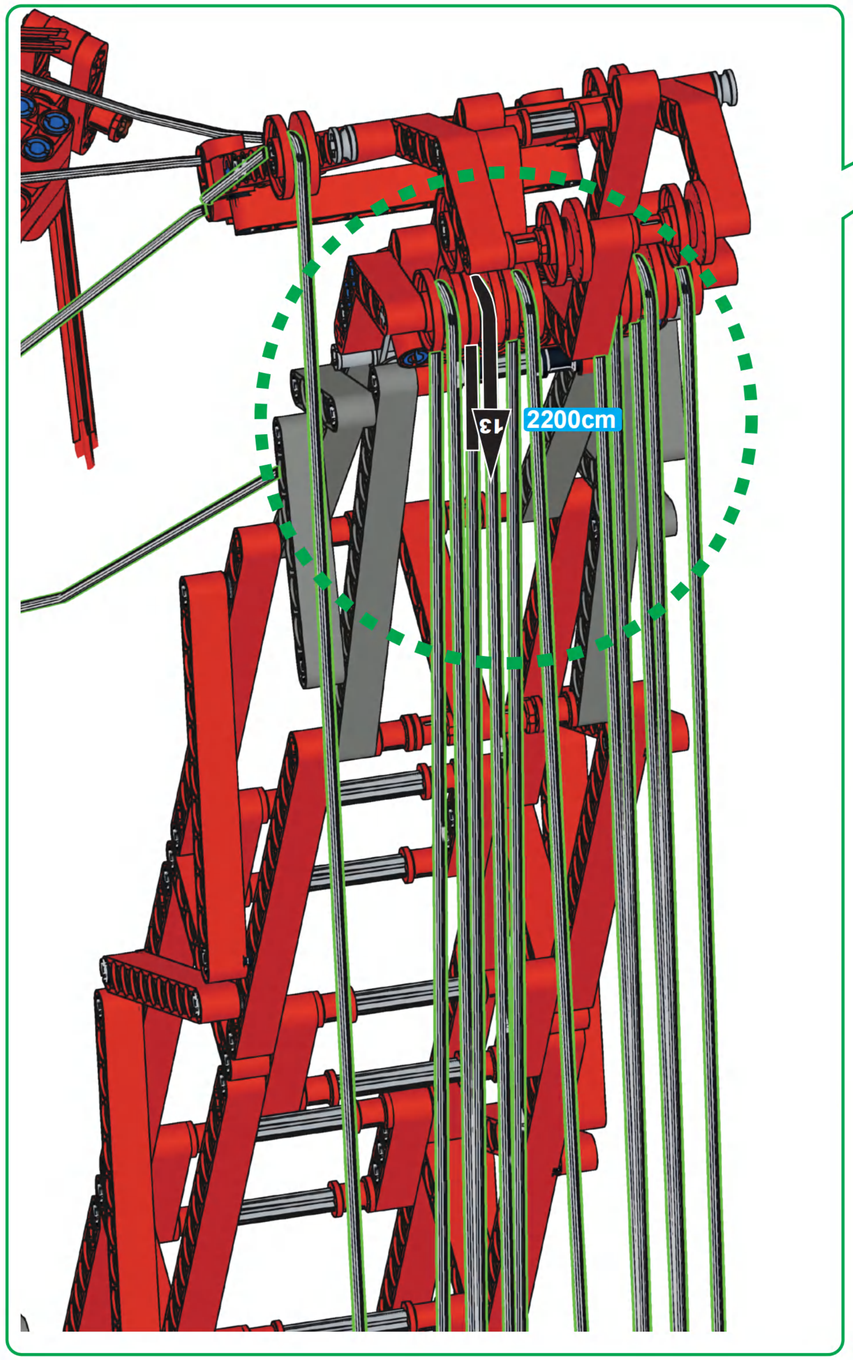

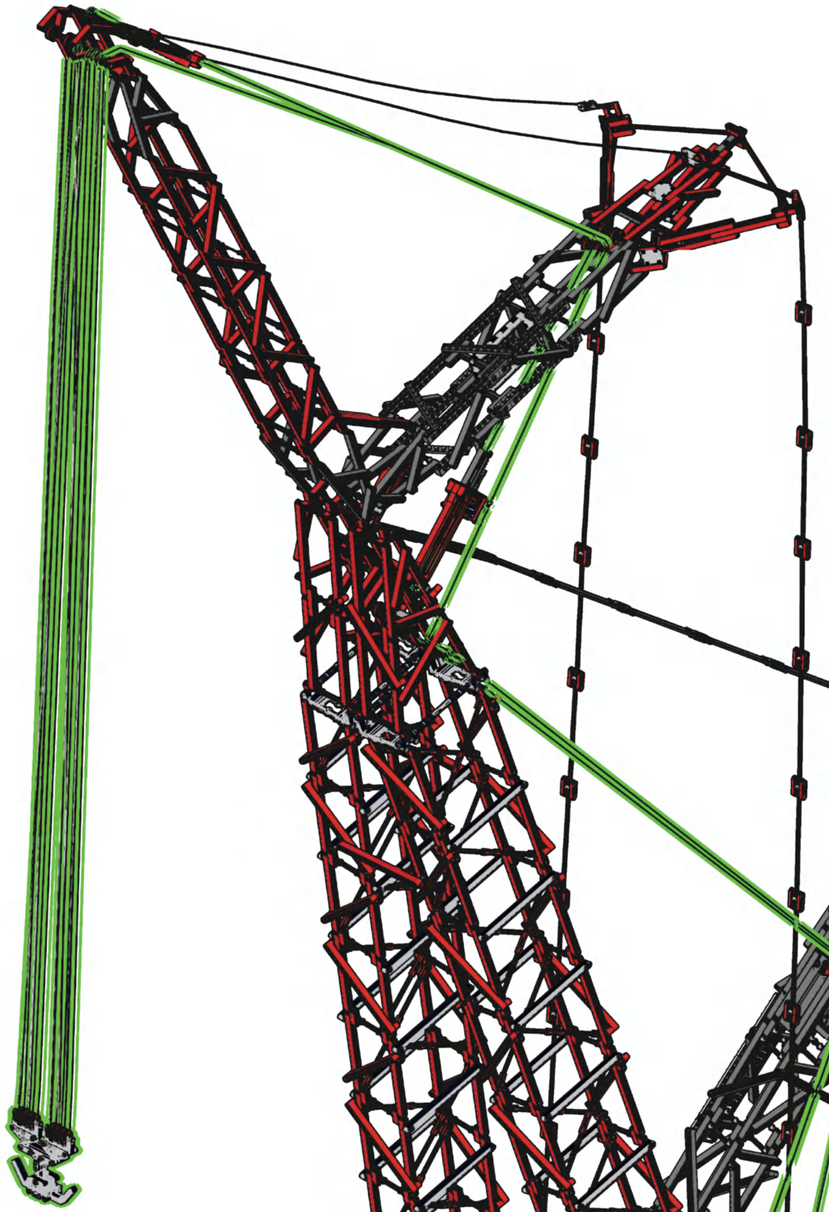

14

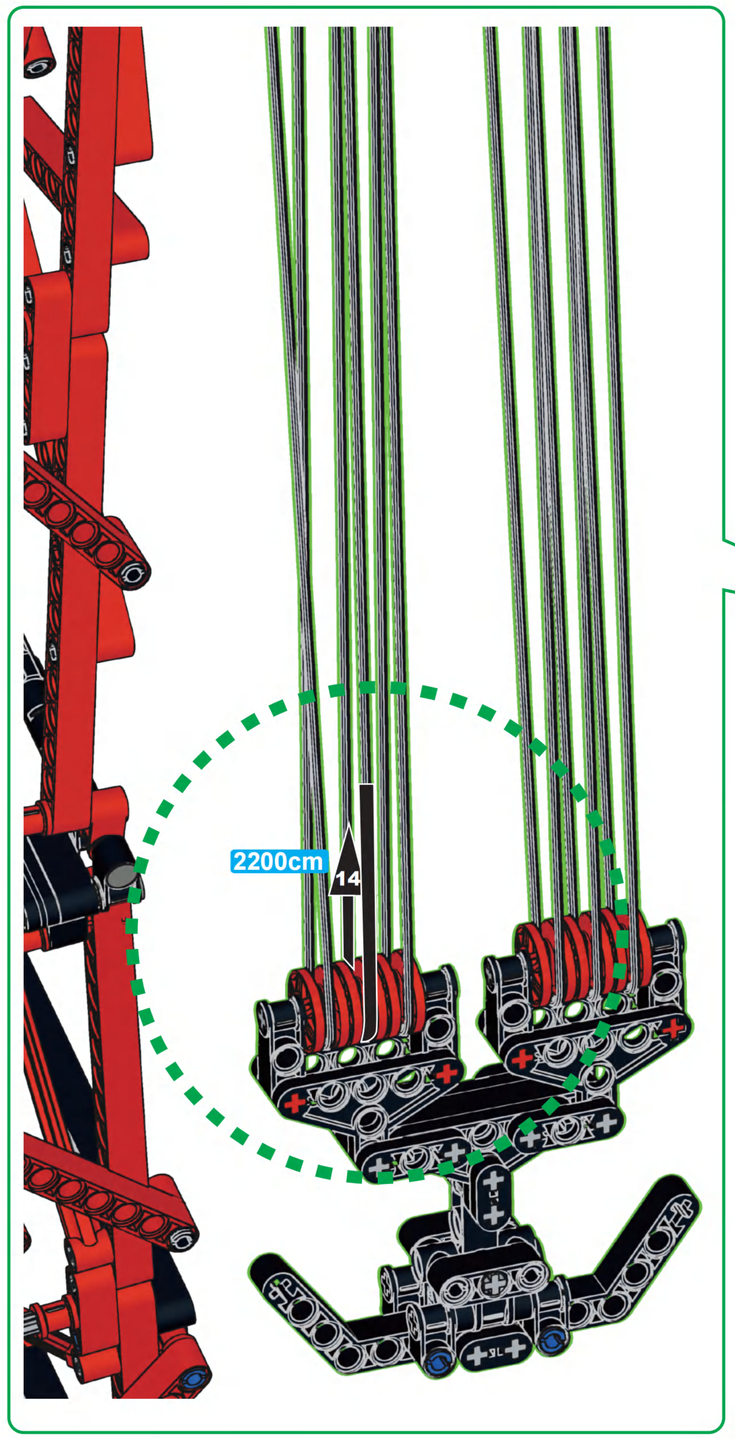

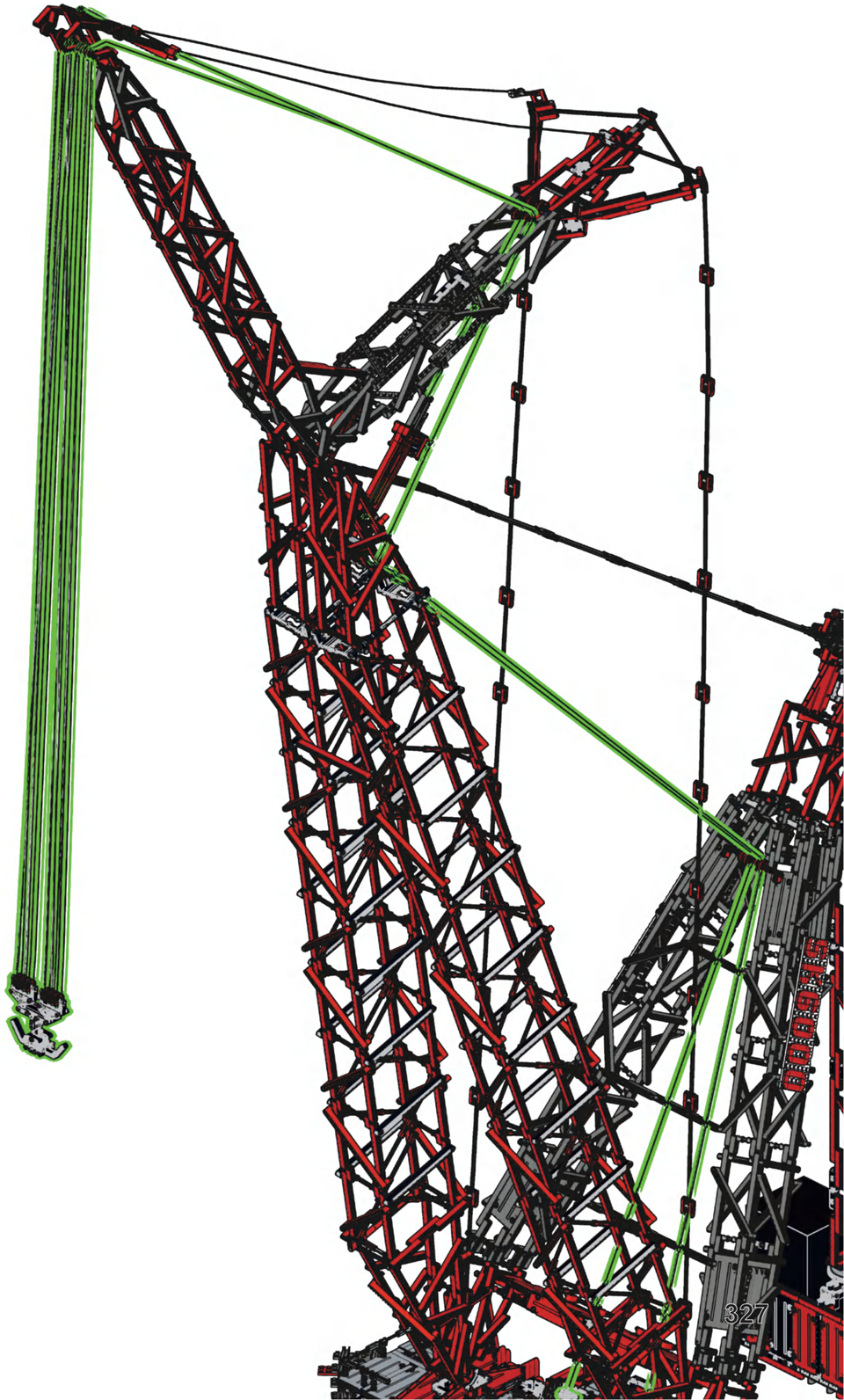

15

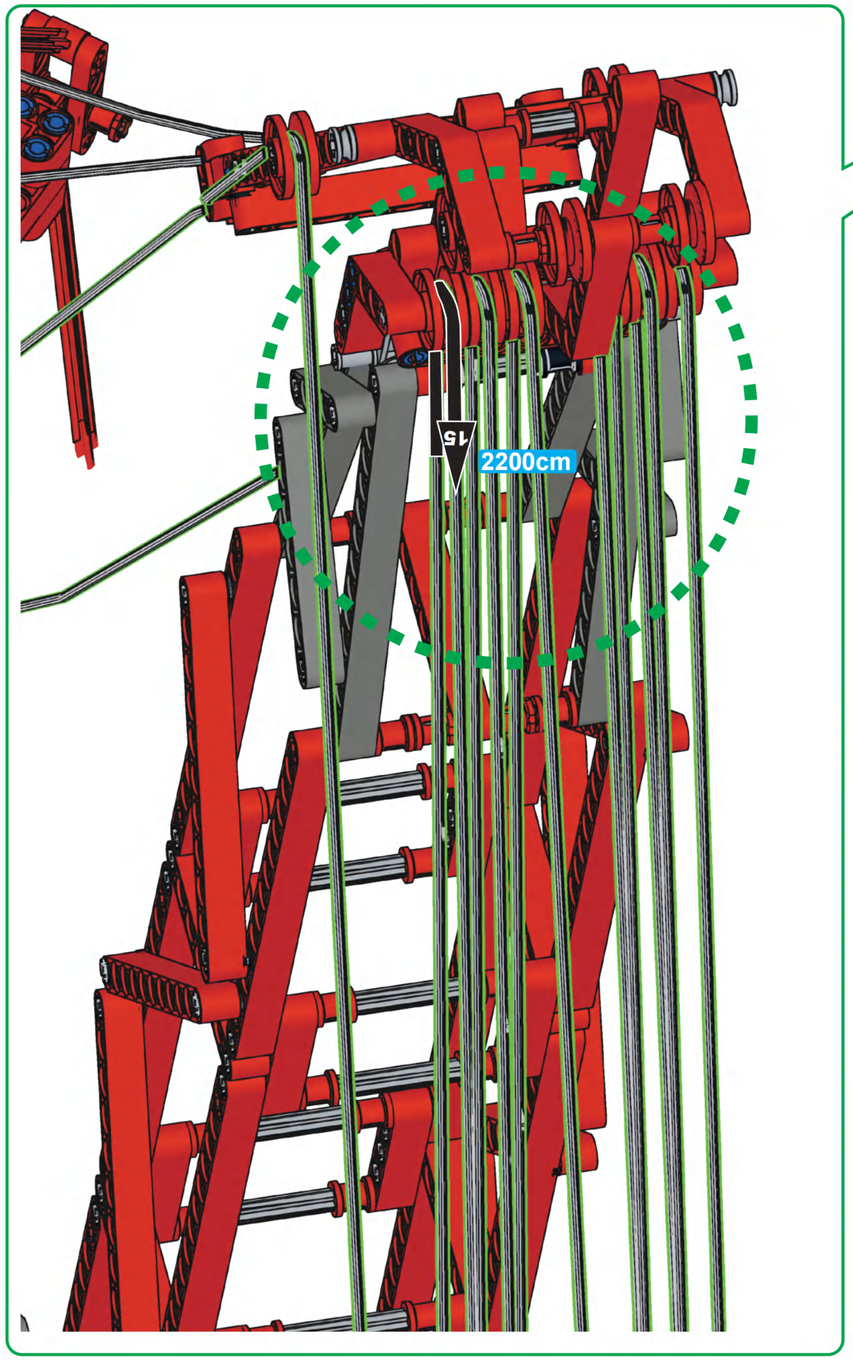

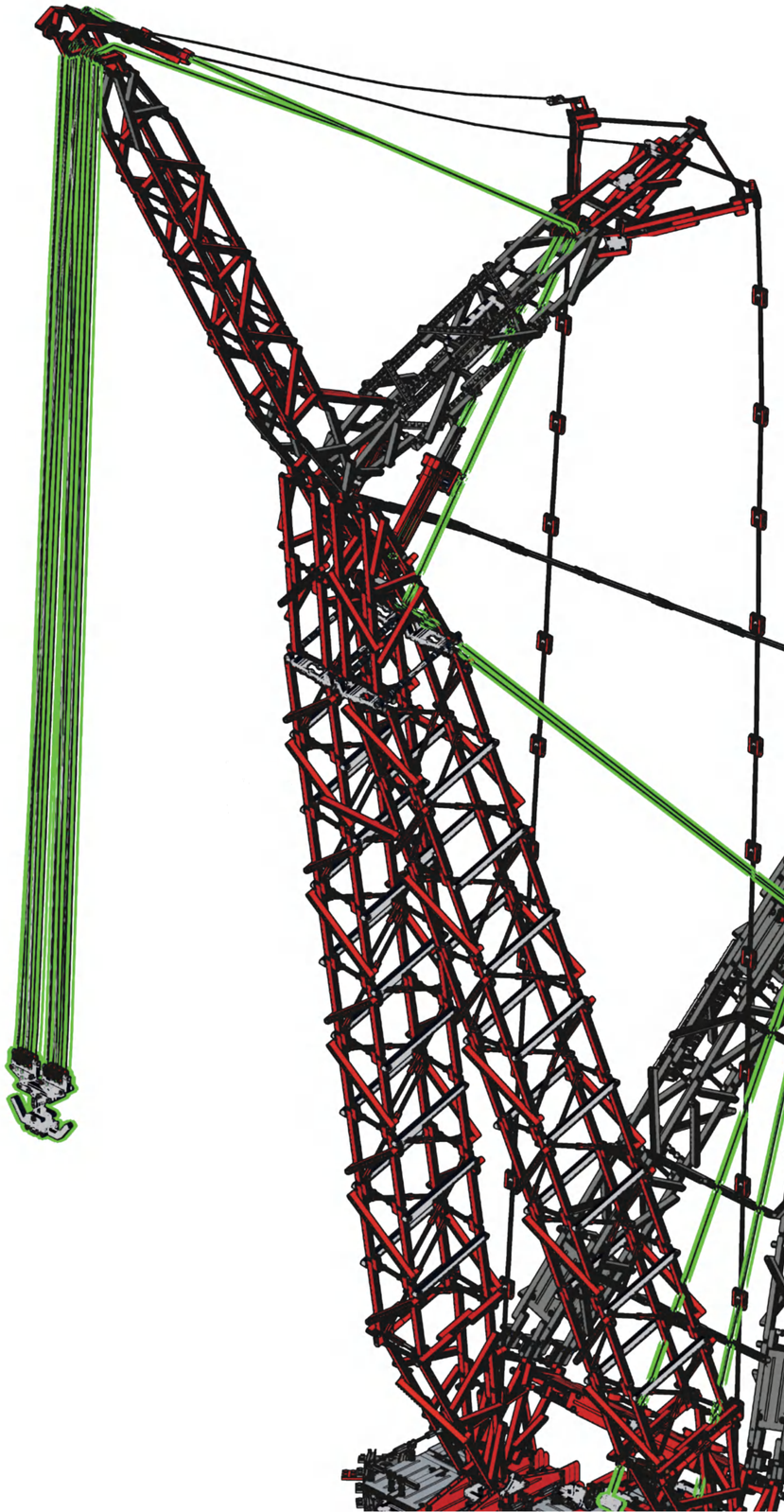

16

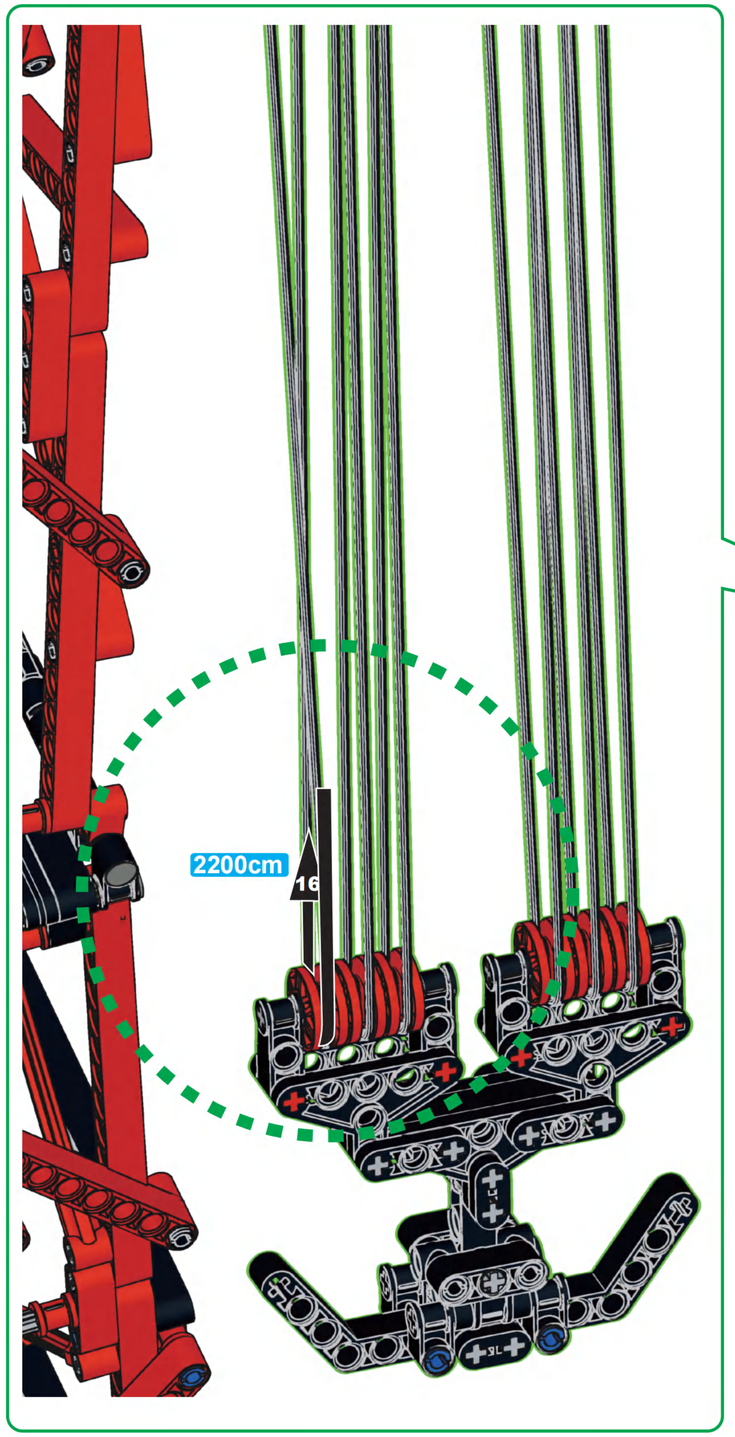

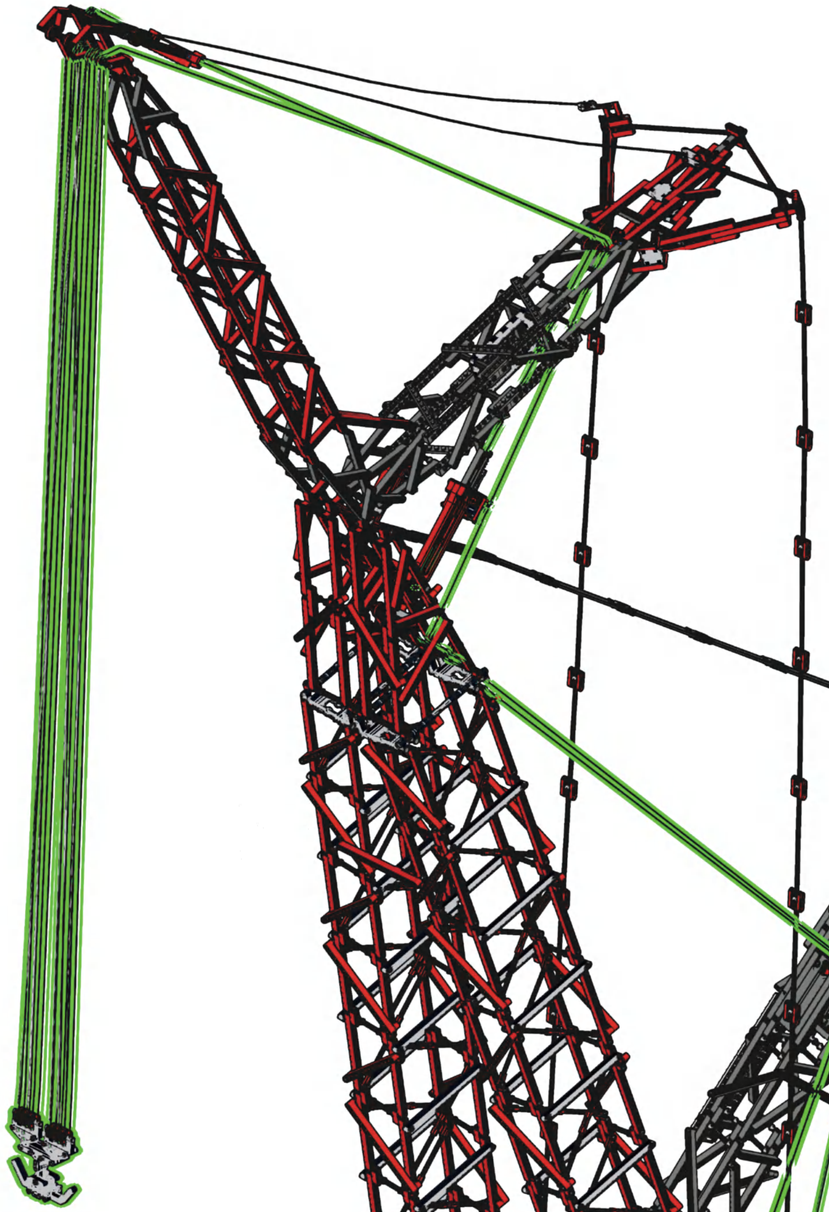

17

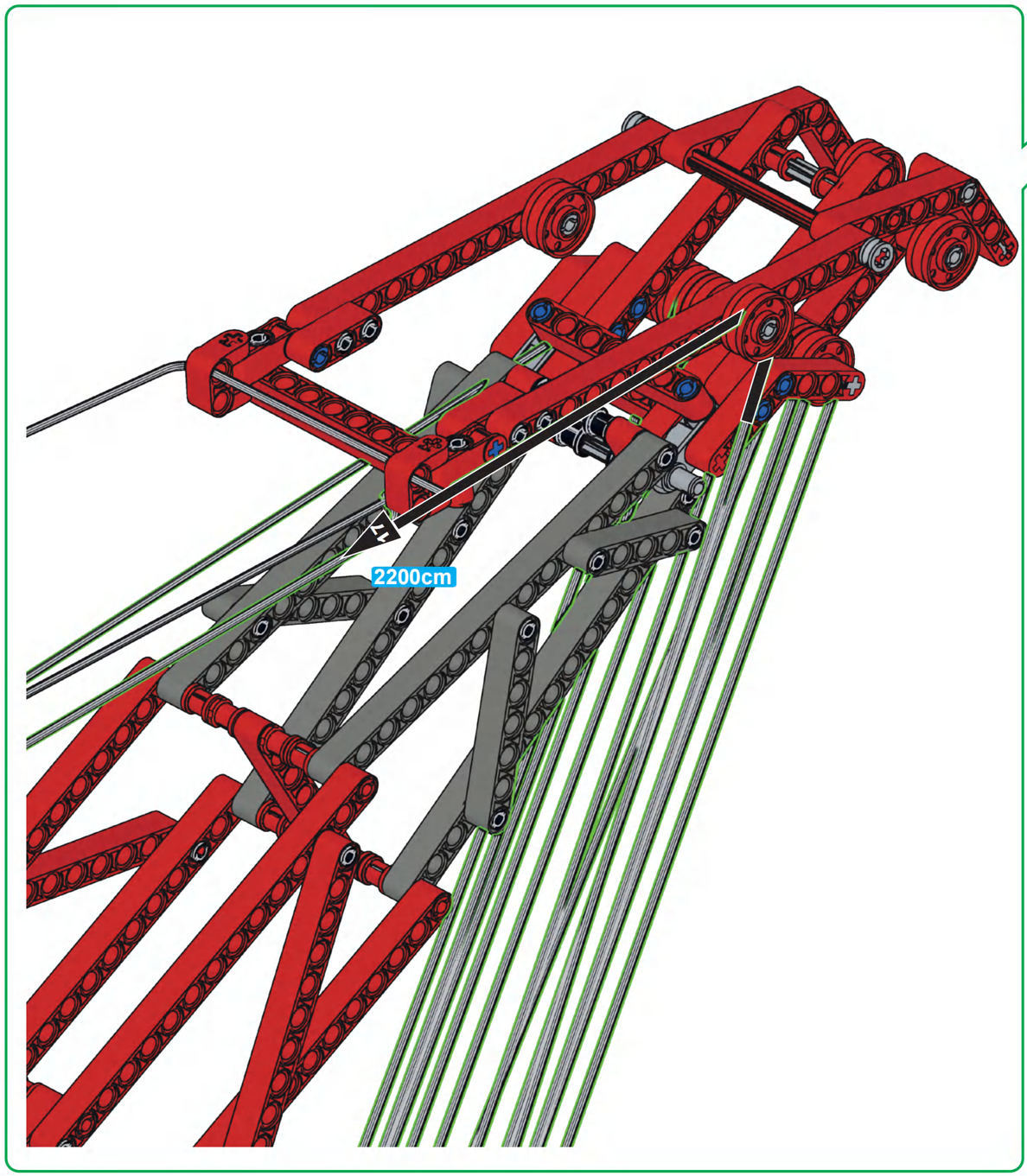

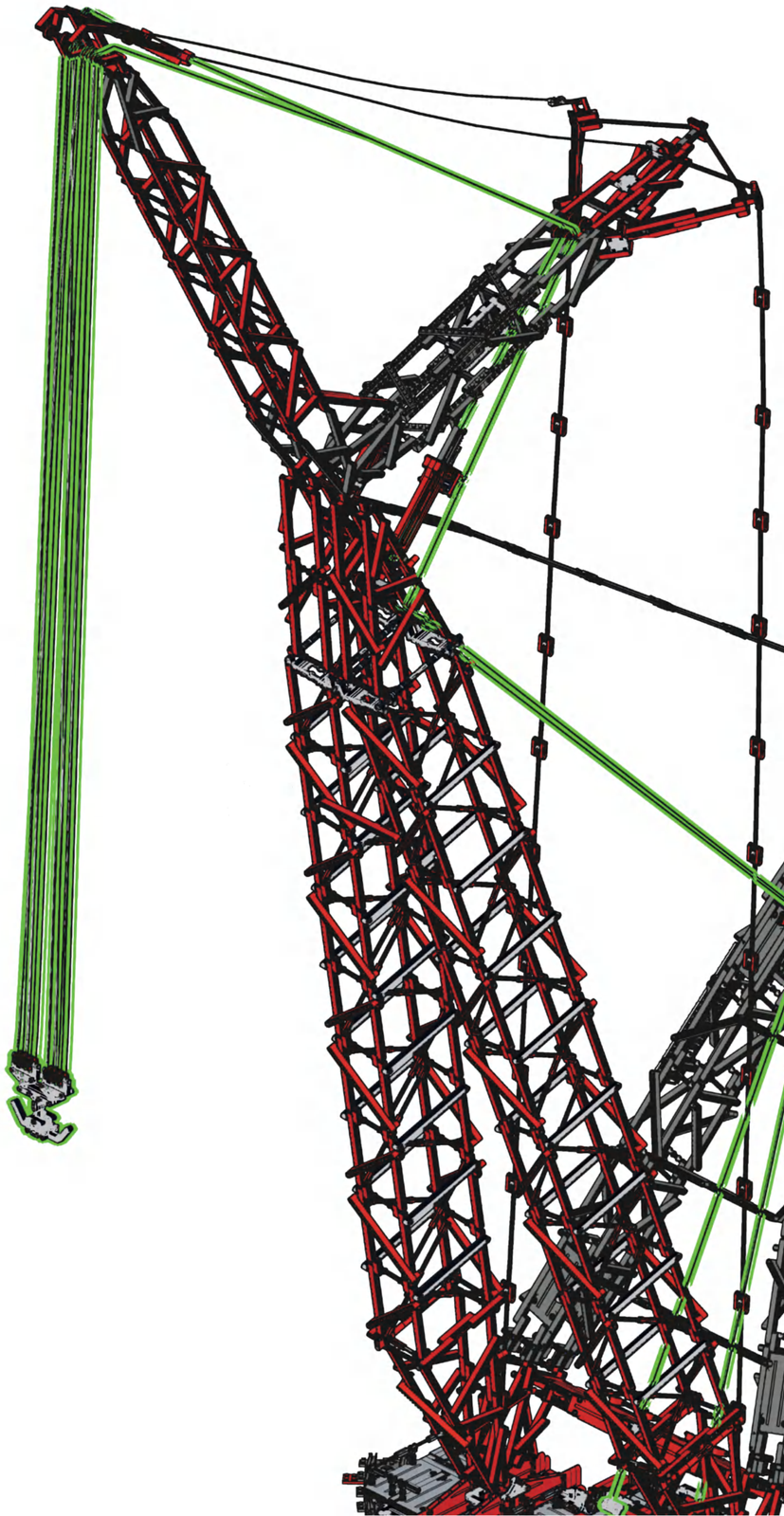

18

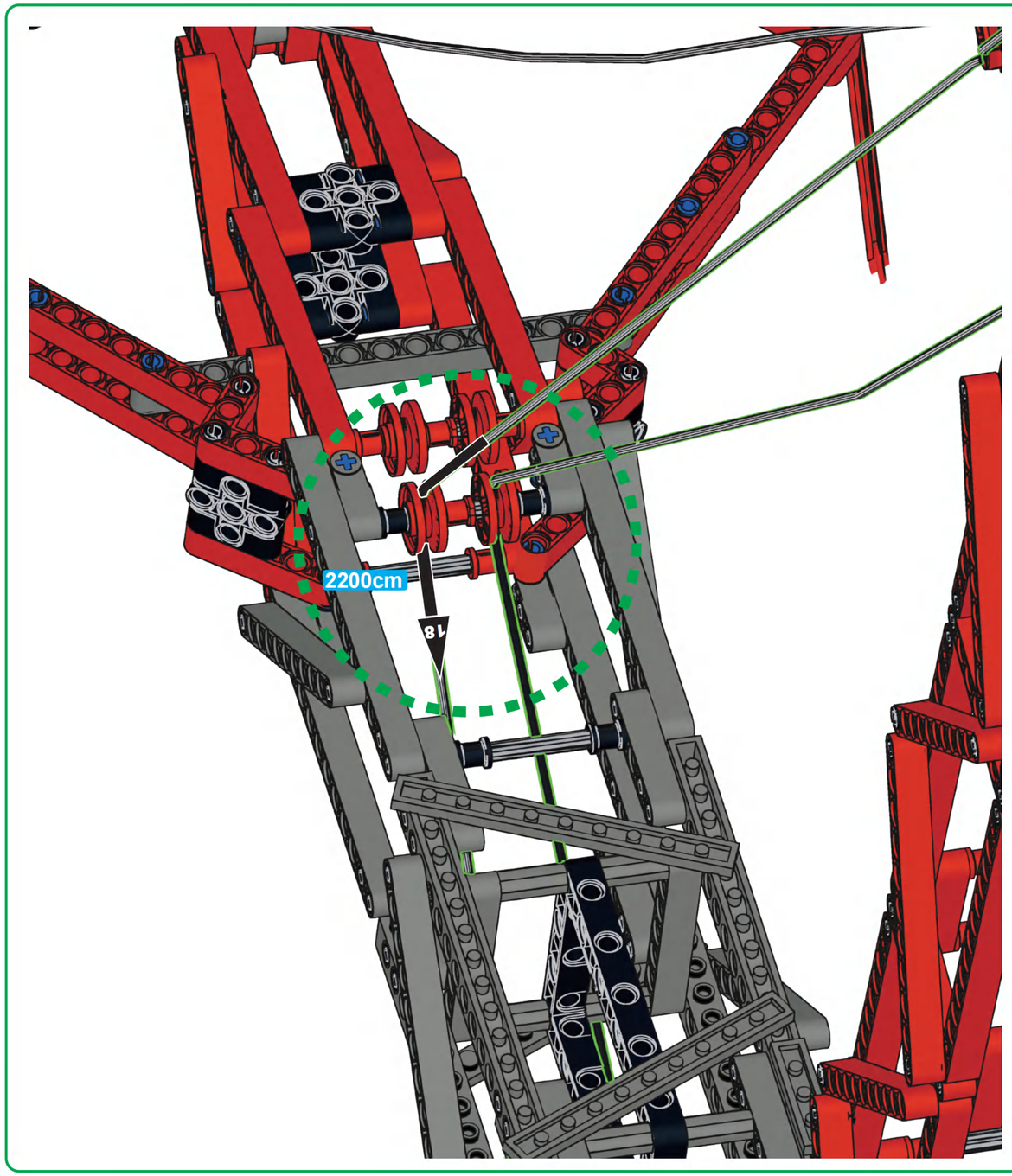

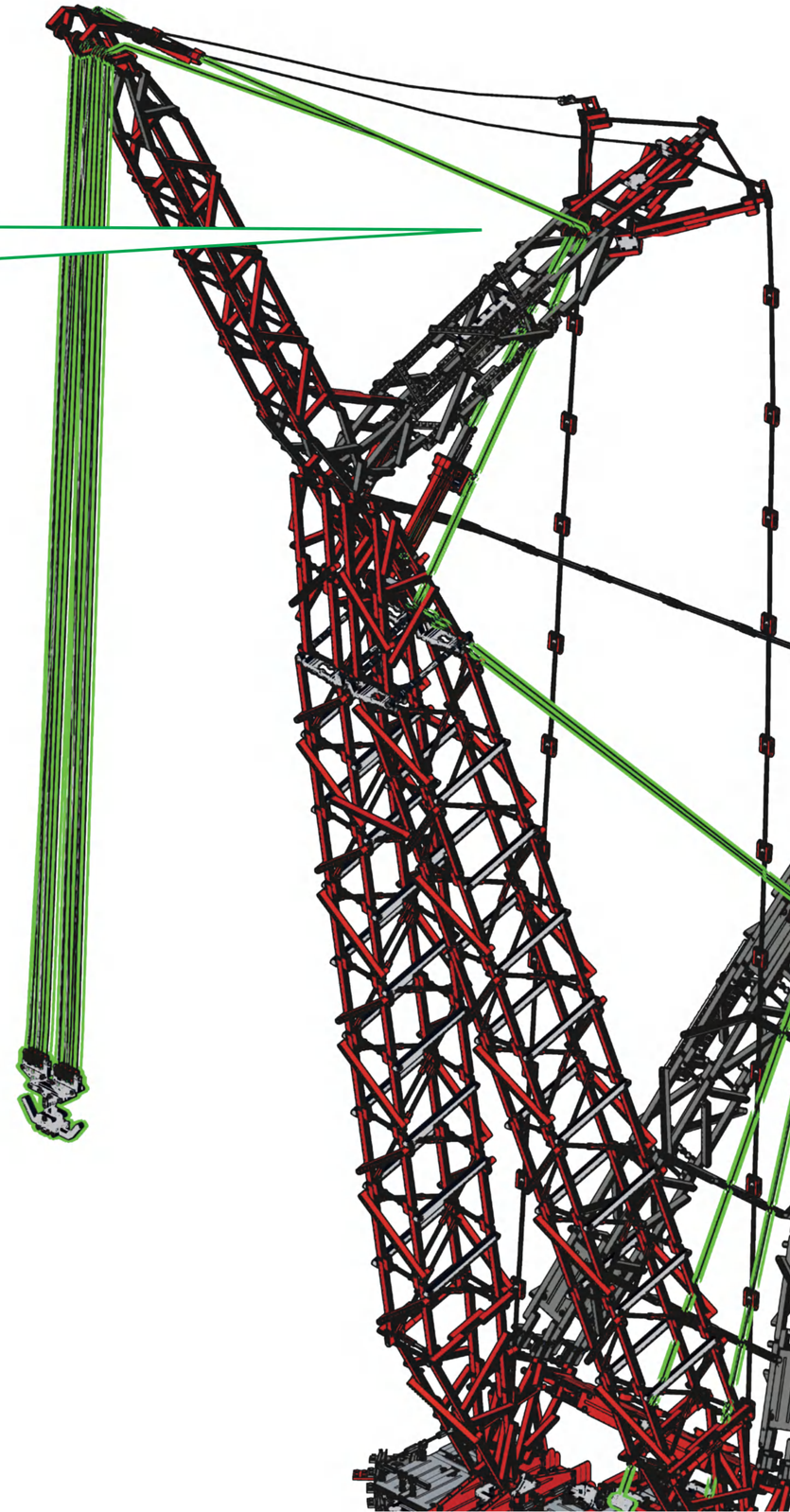

19

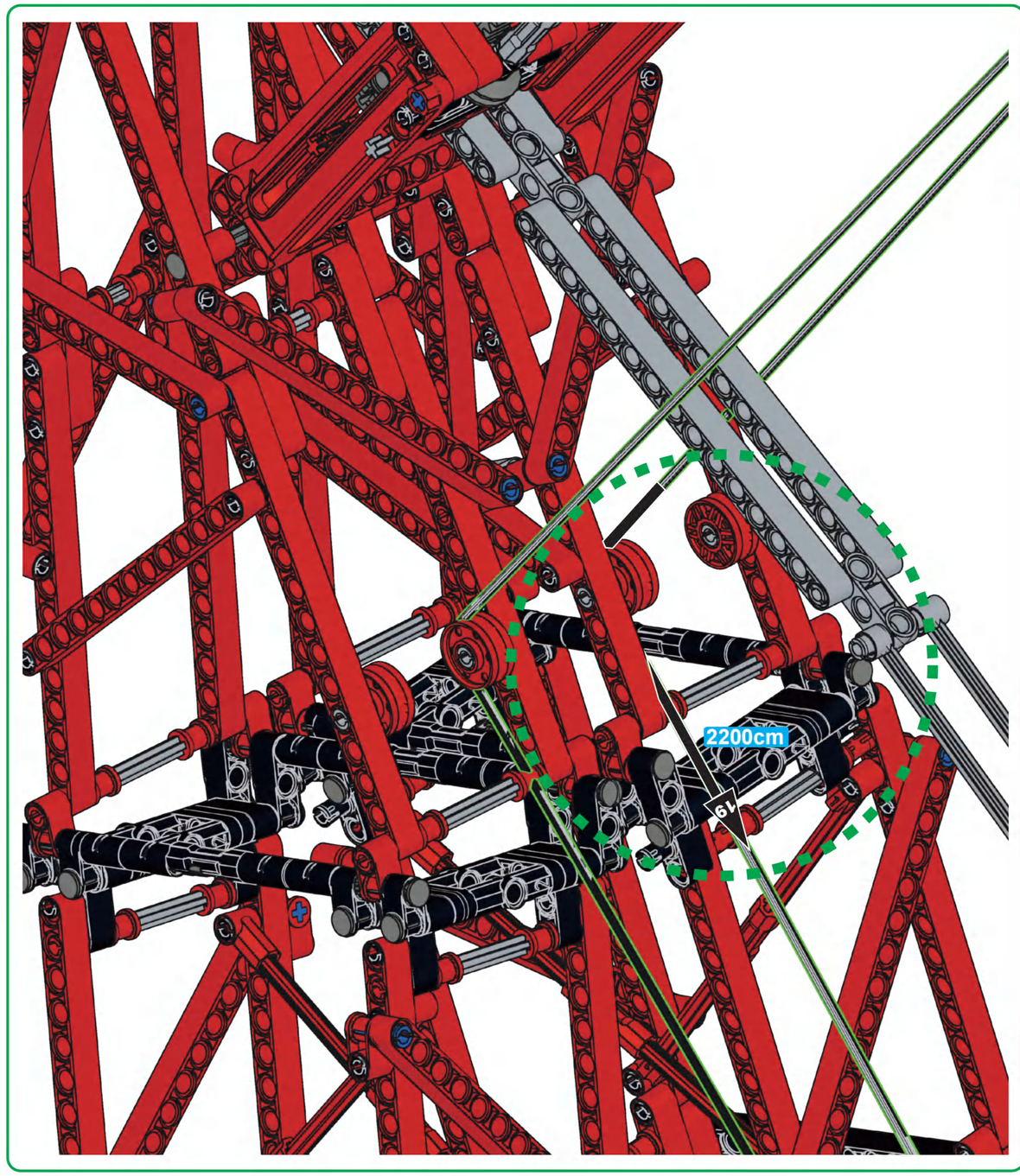

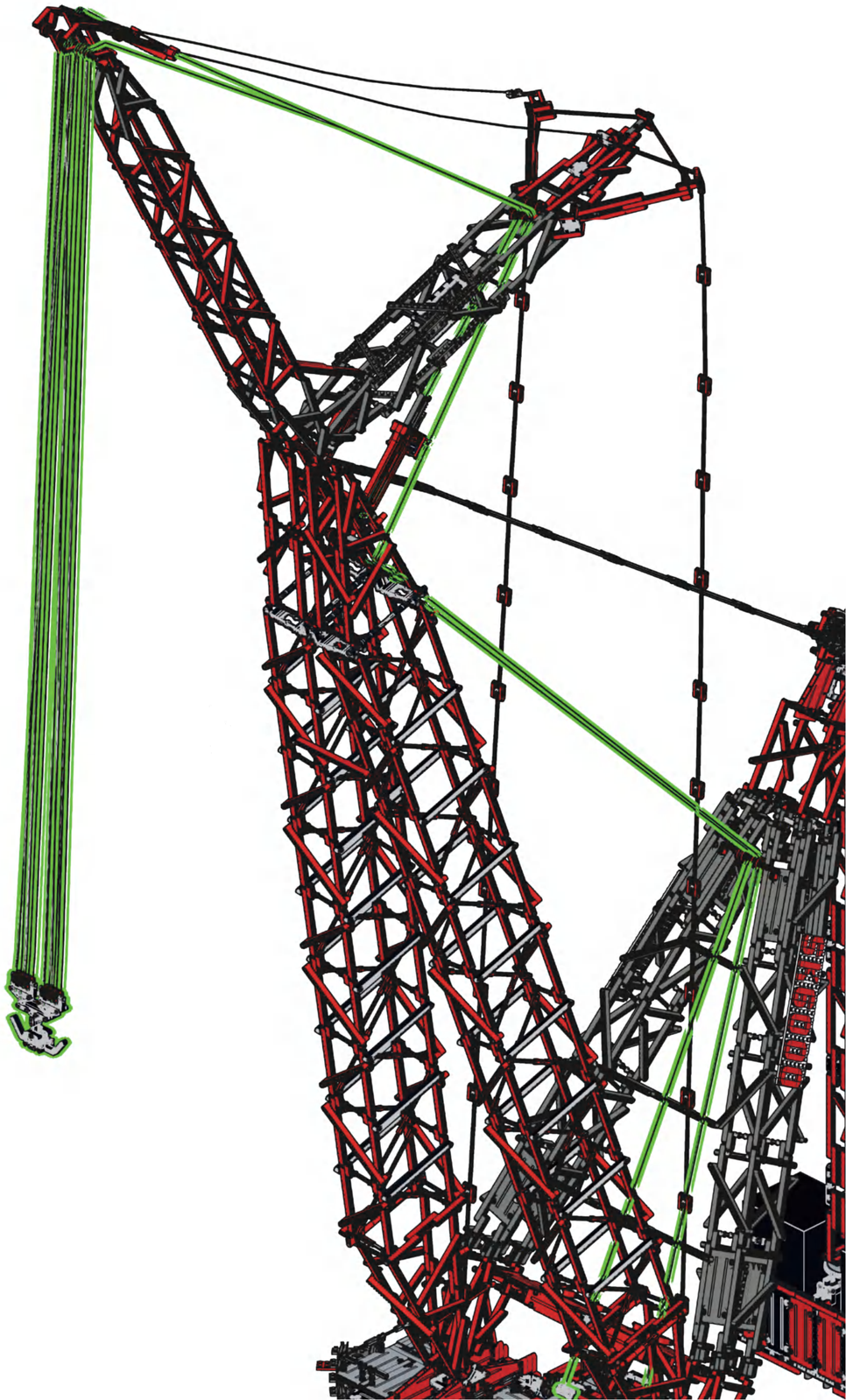

20

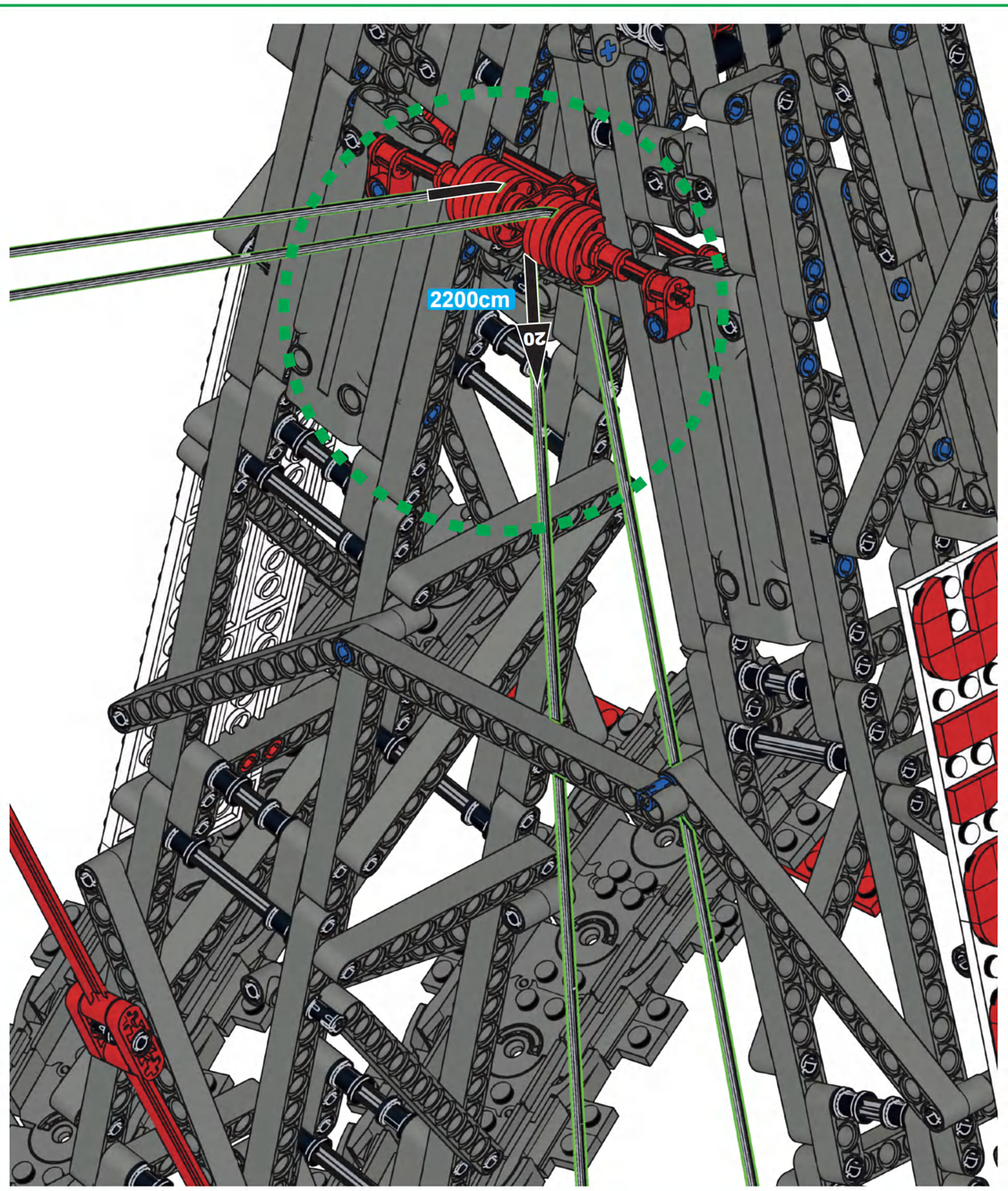

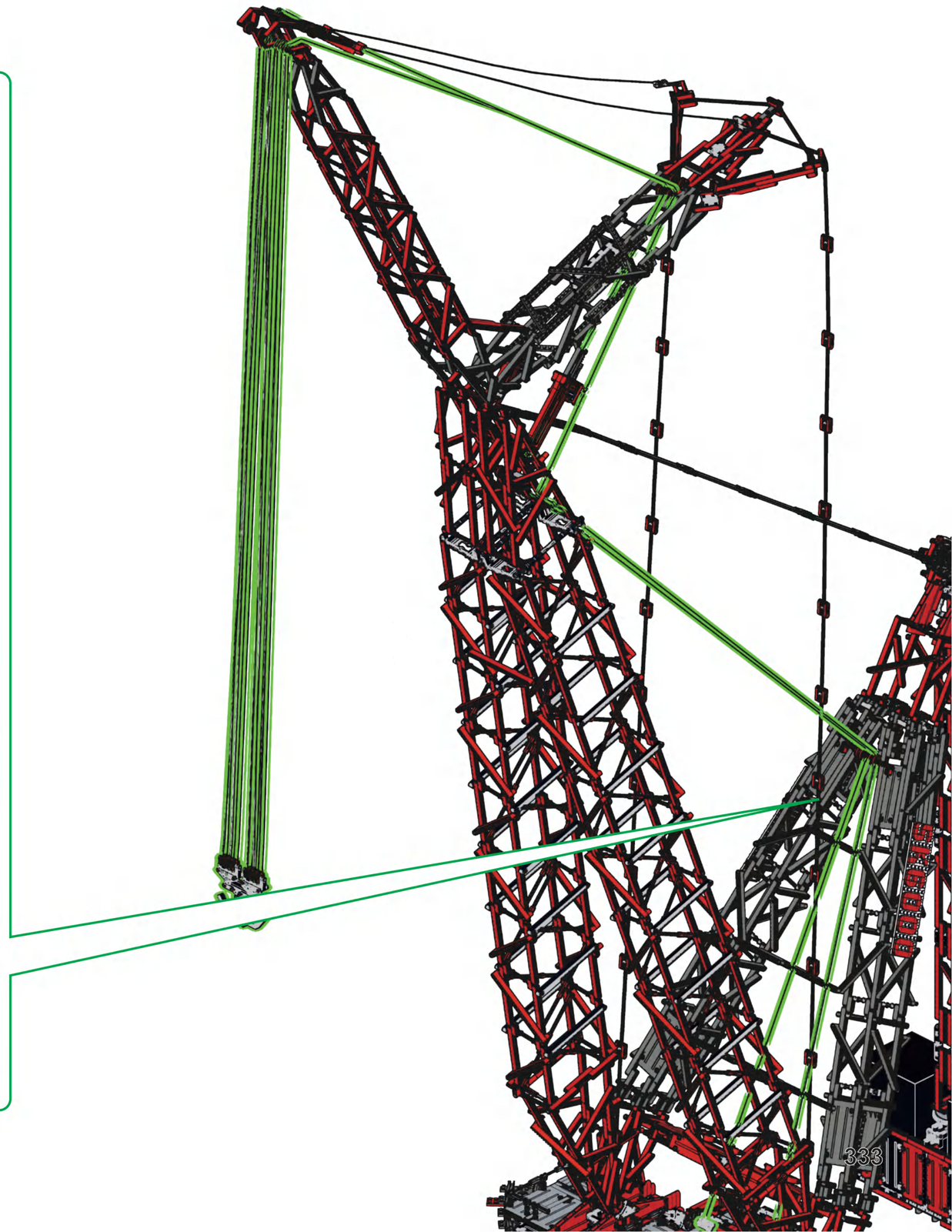

21

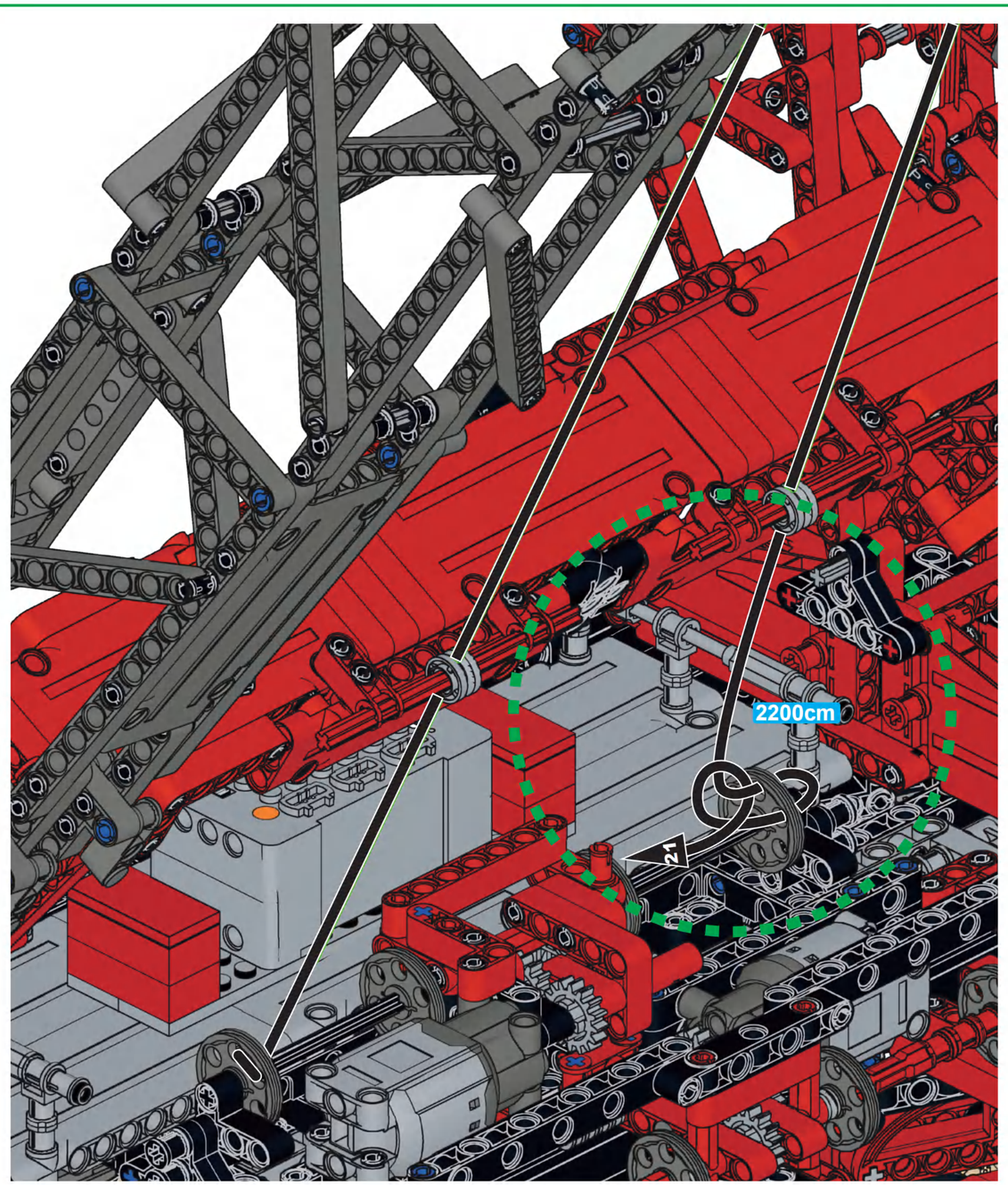

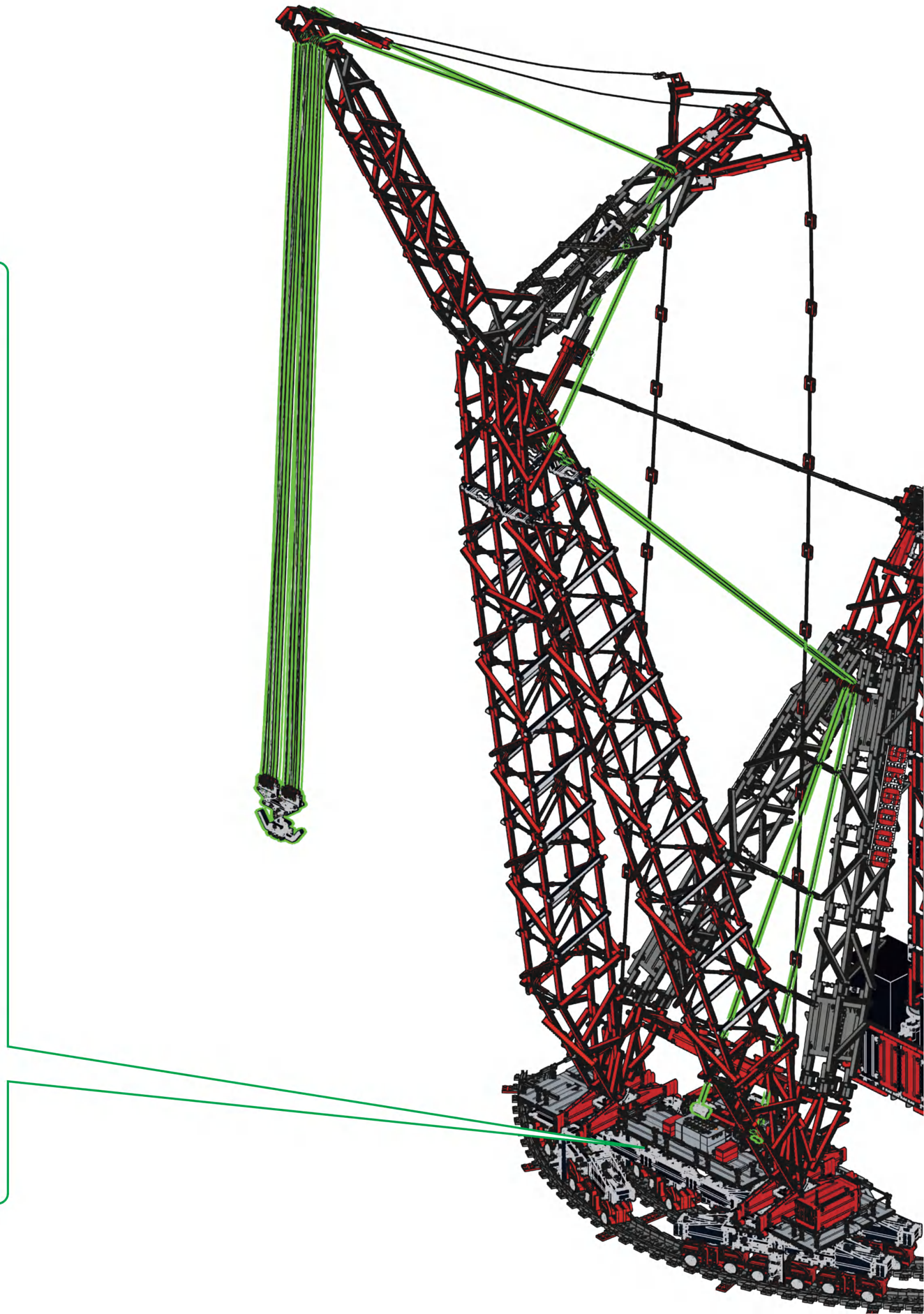

T44

1

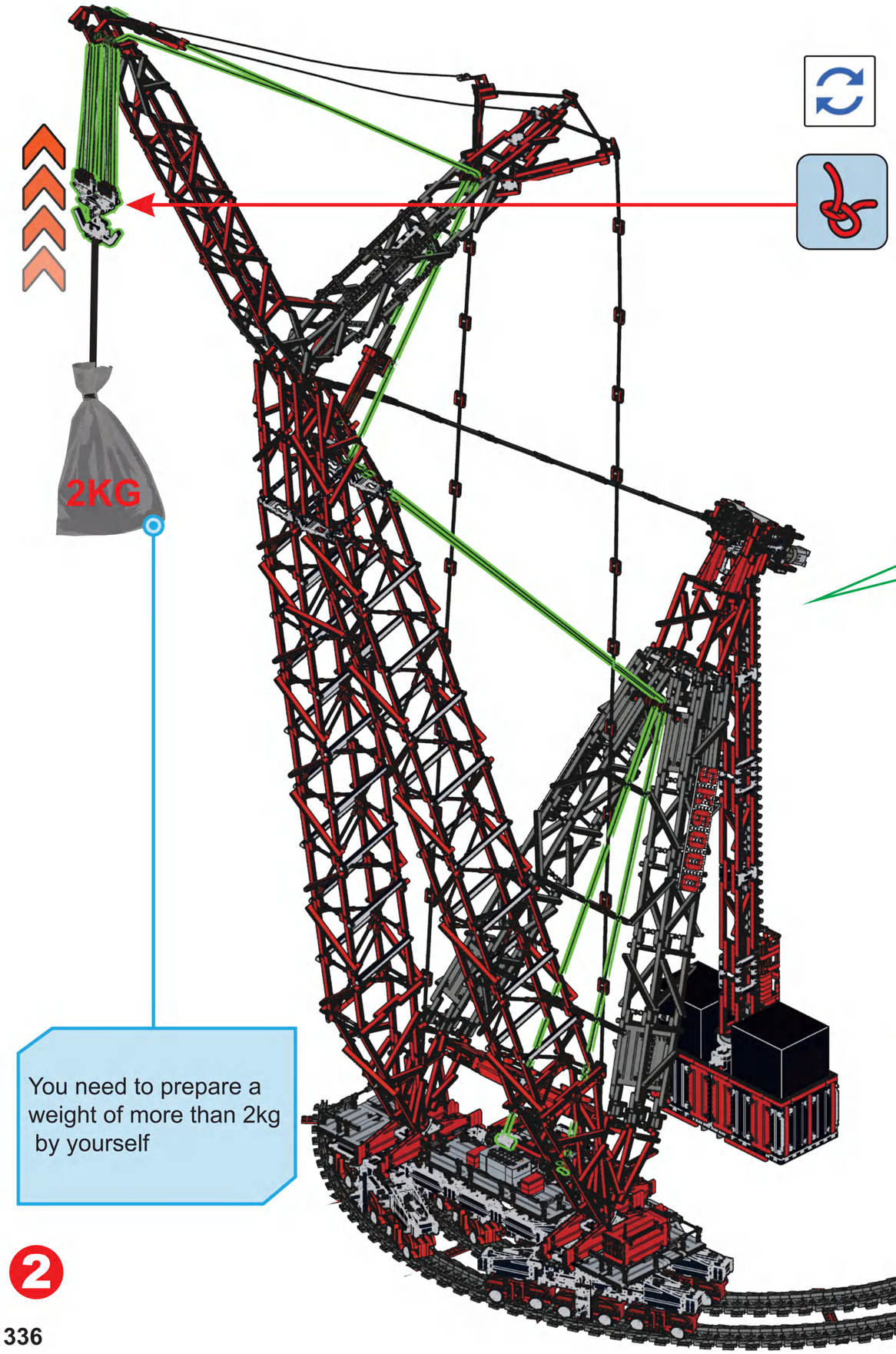

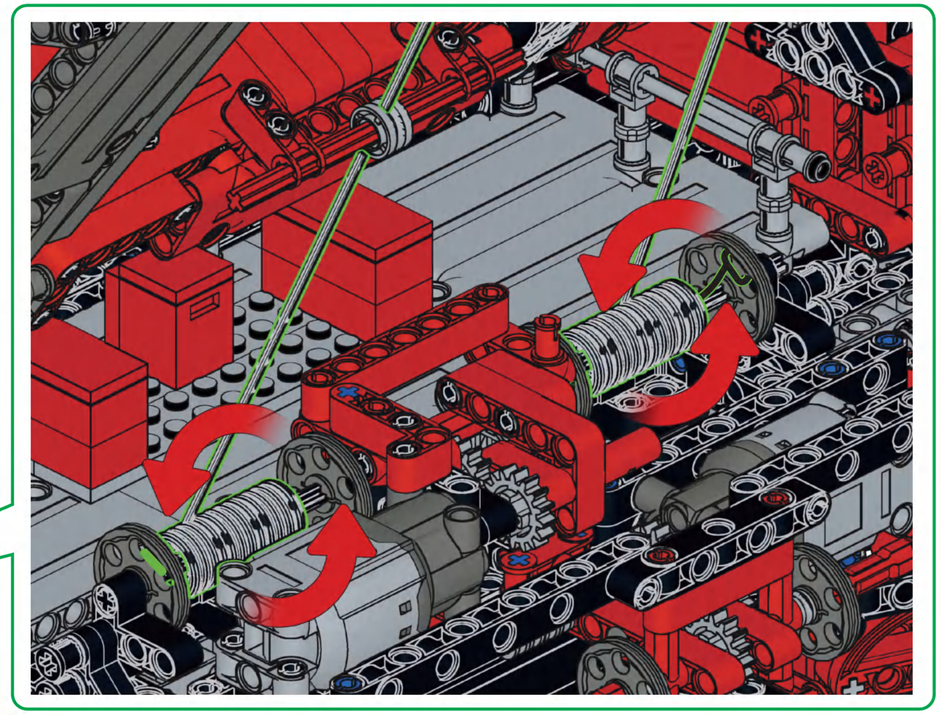

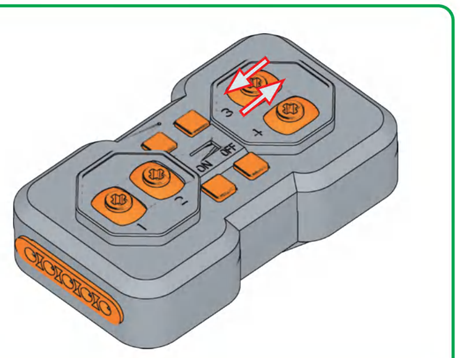

You need to prepare a weight of more than 2kg by yourself

2

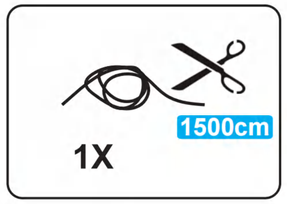

T45

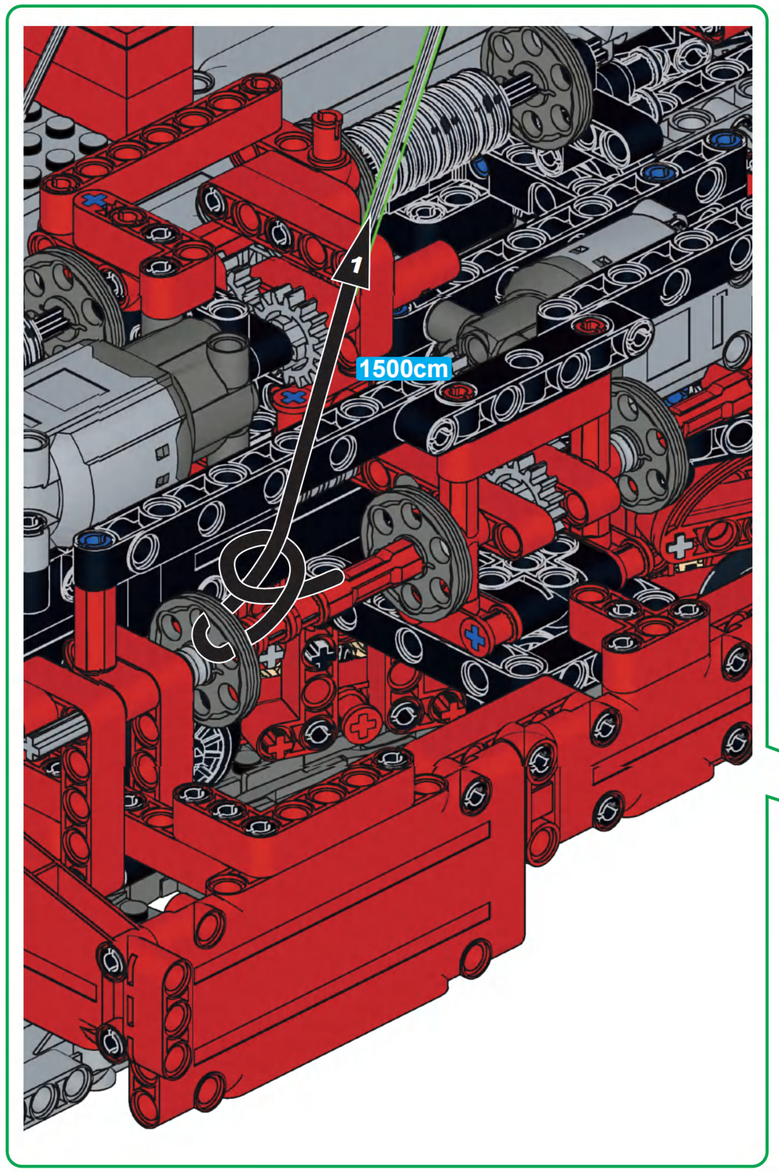

1

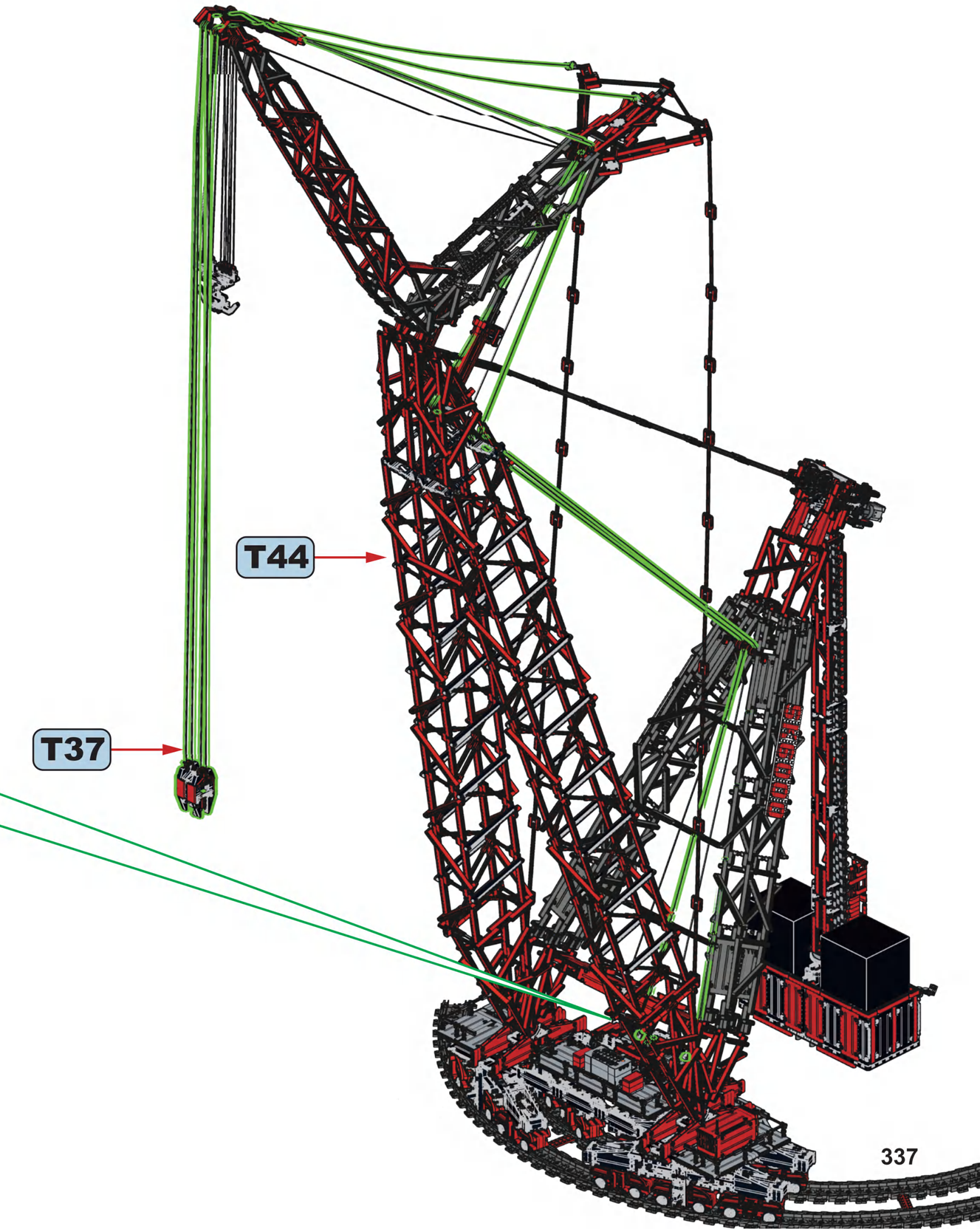

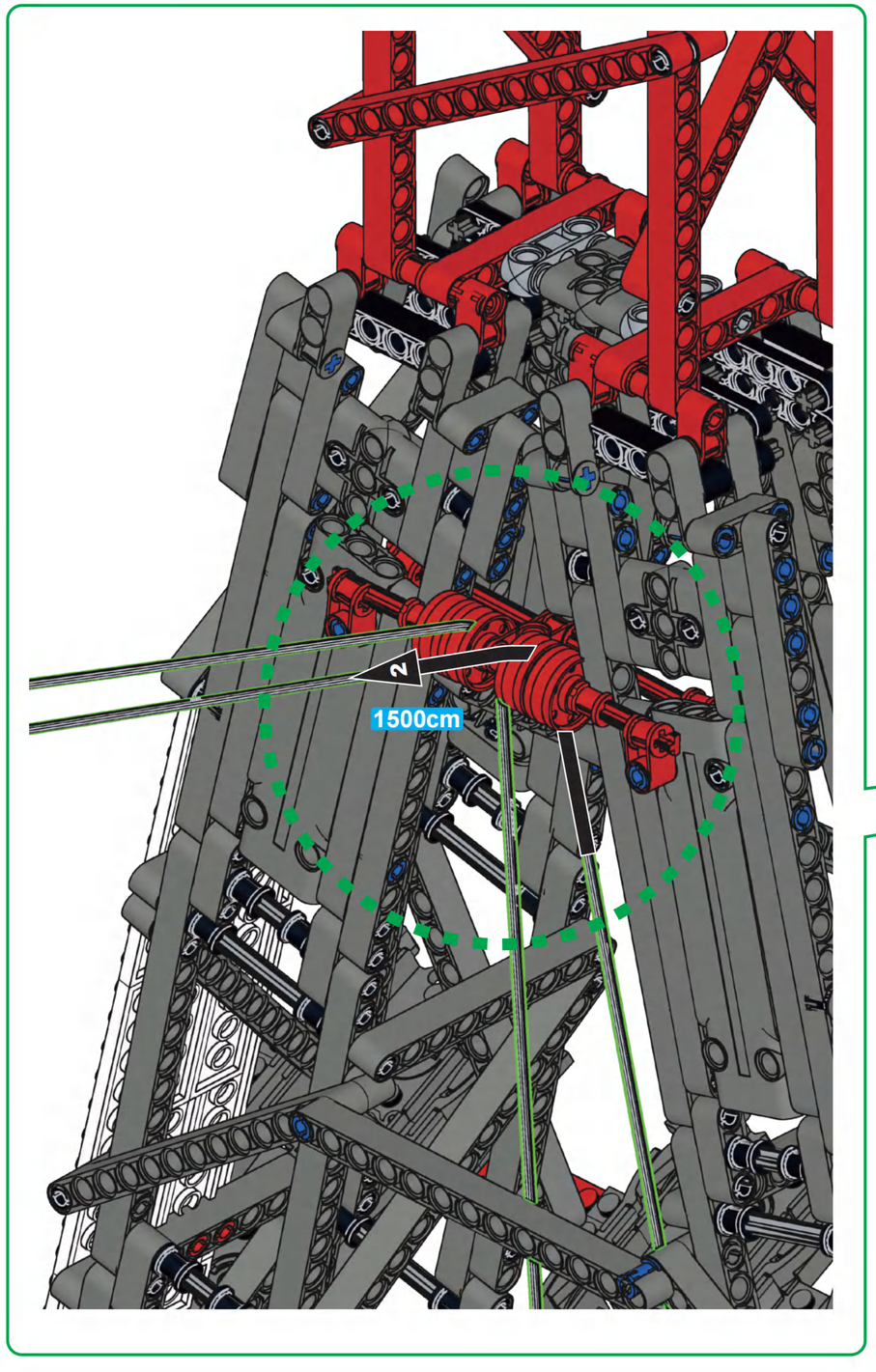
2
1500cm

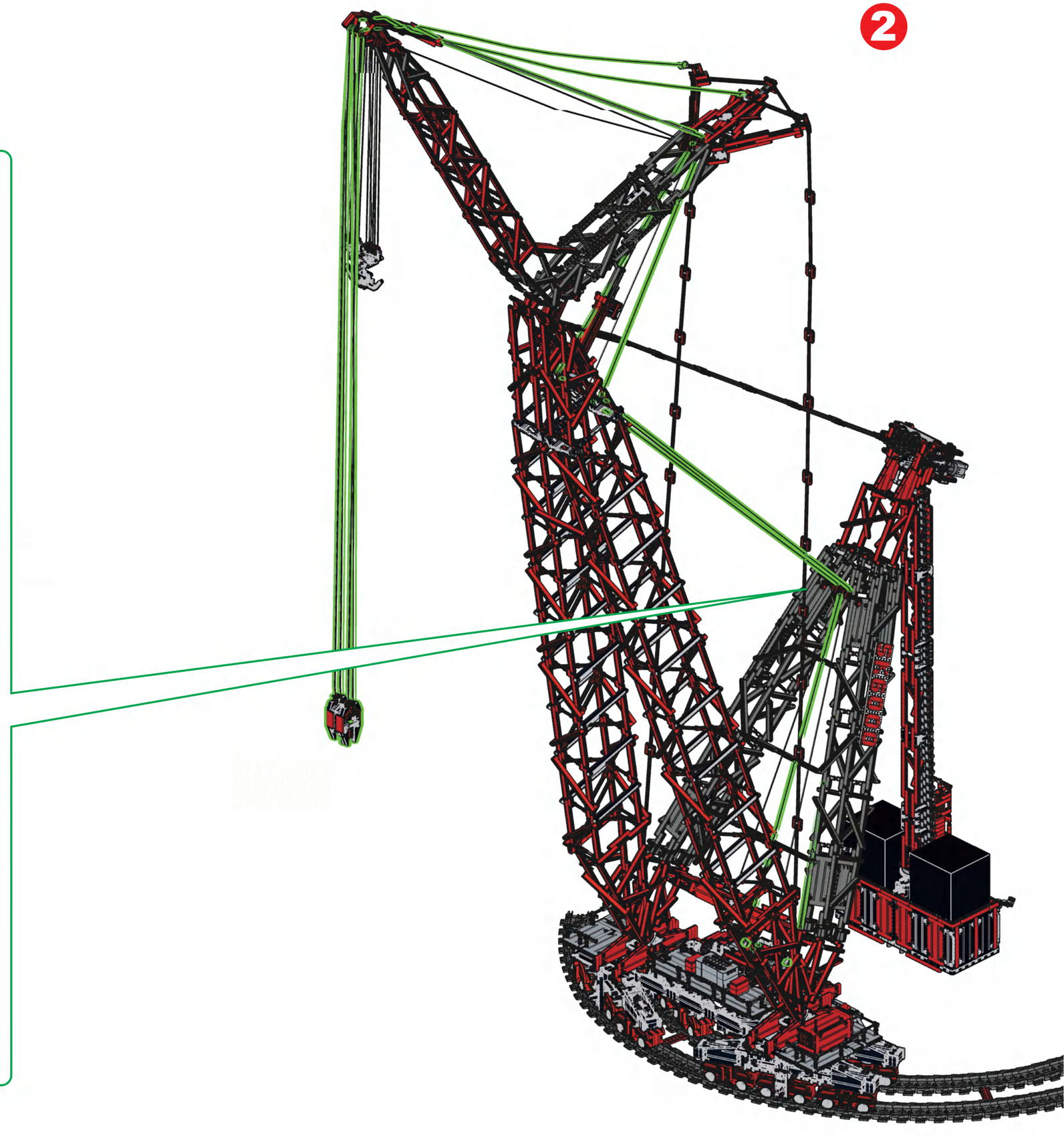
2

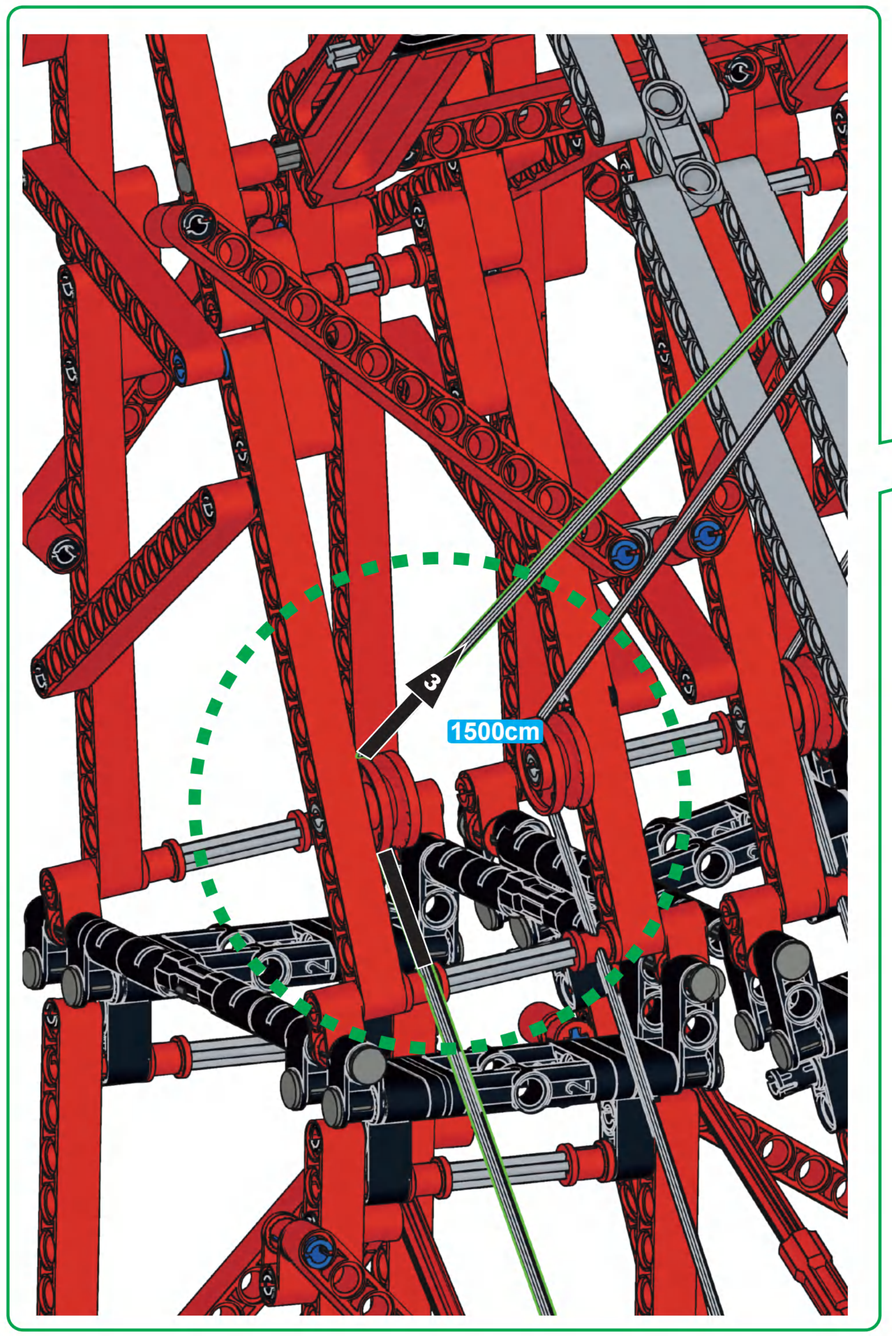
1500cm

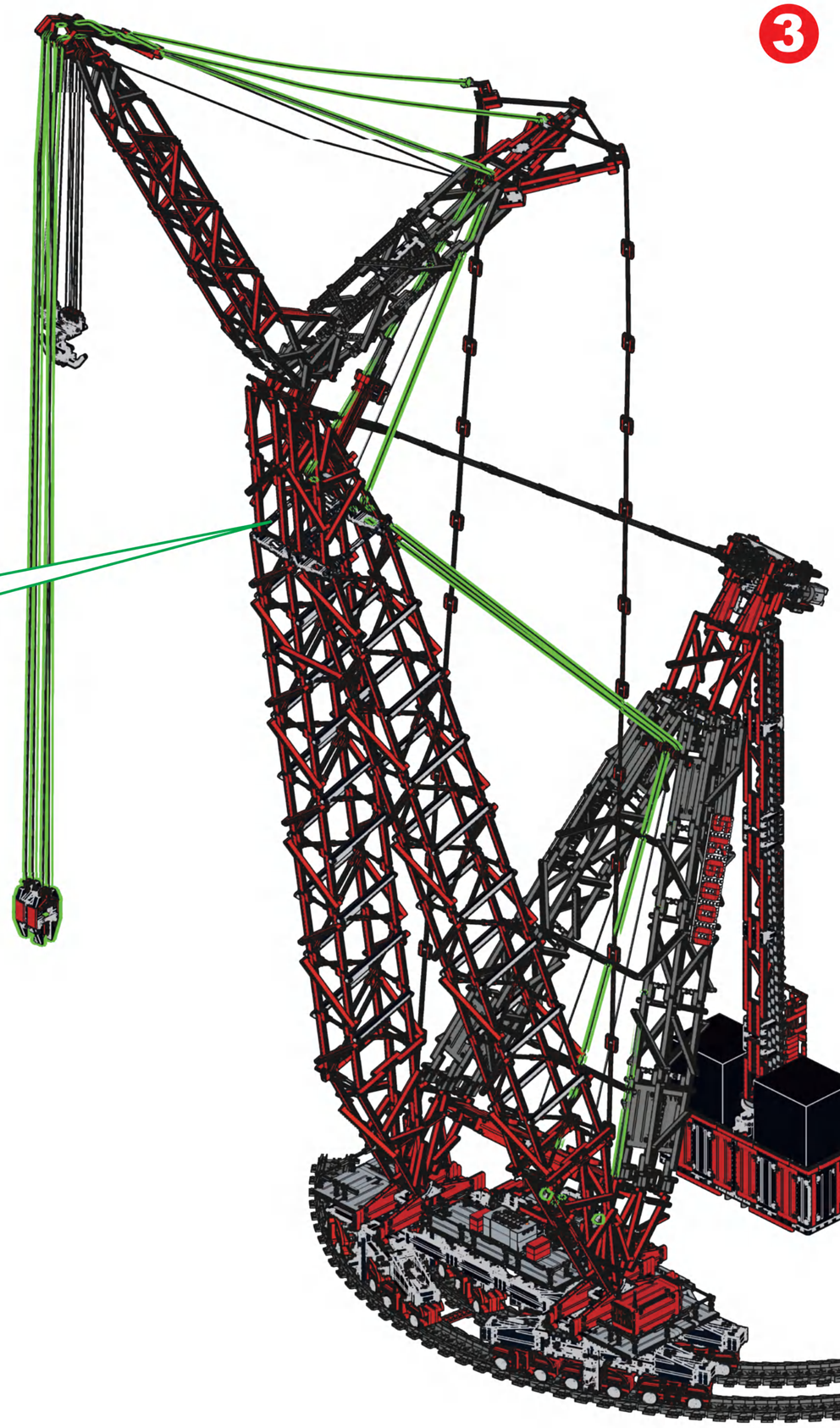

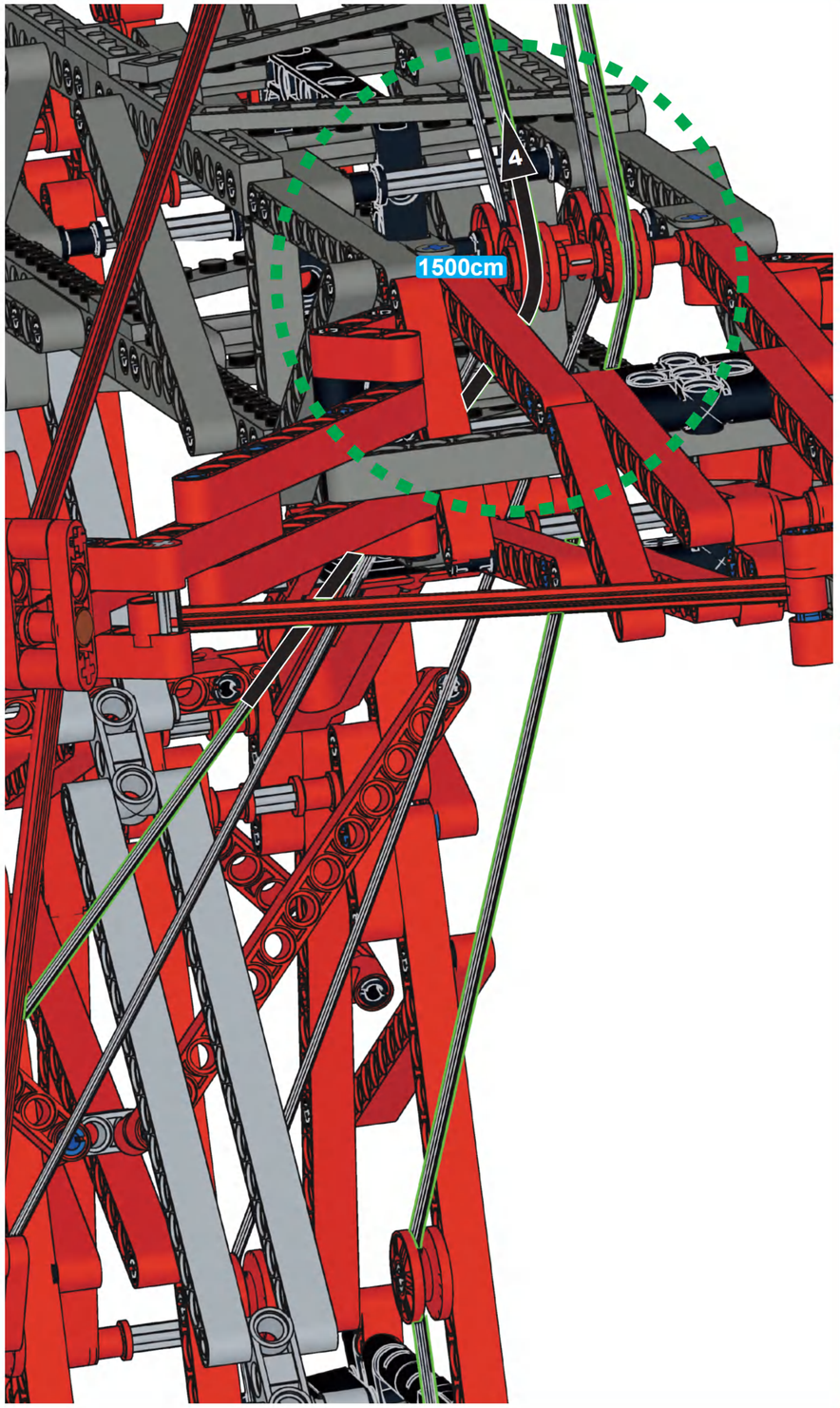
4
1500cm


4

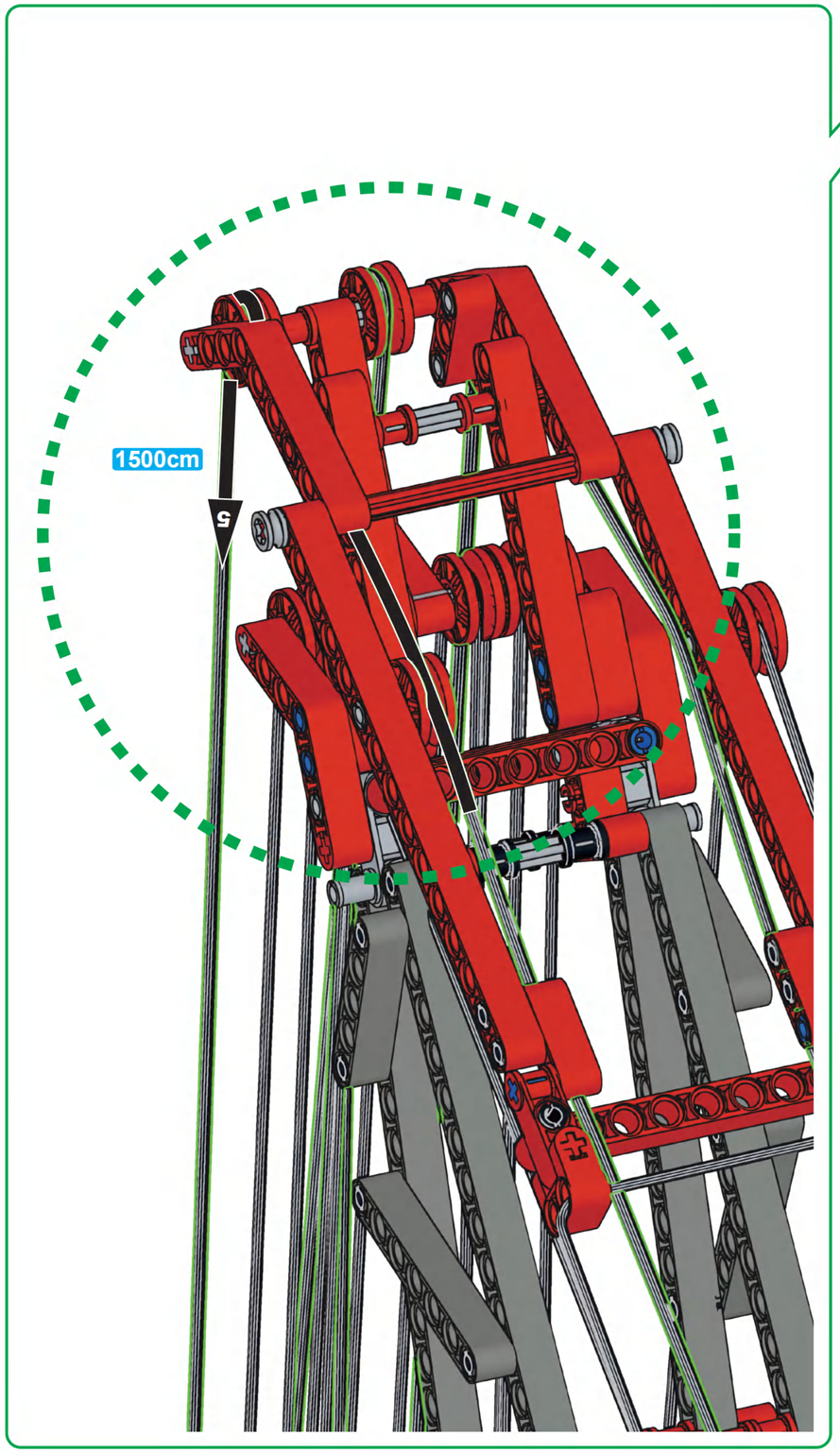
1500cm
5



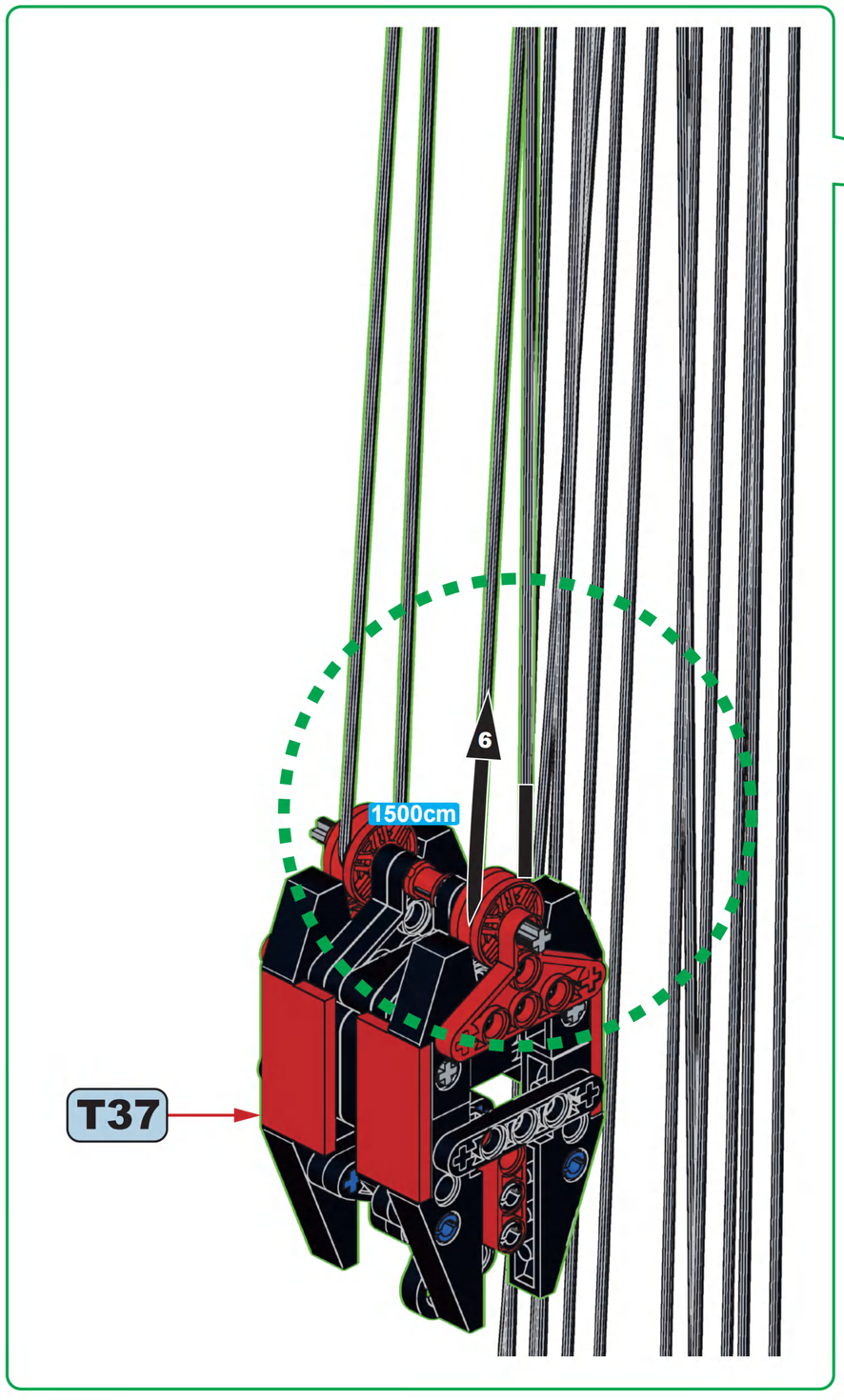
6
1500cm
T37


6

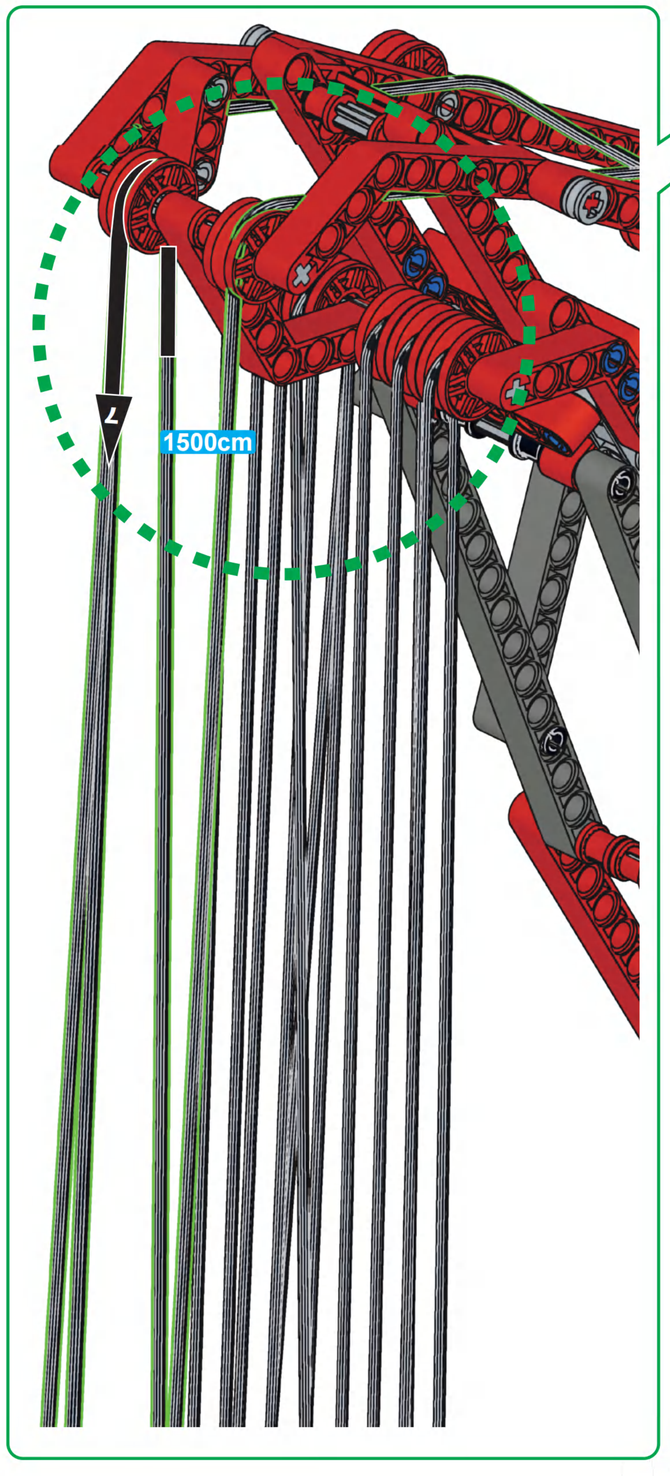
L
1500cm




8
1500cm

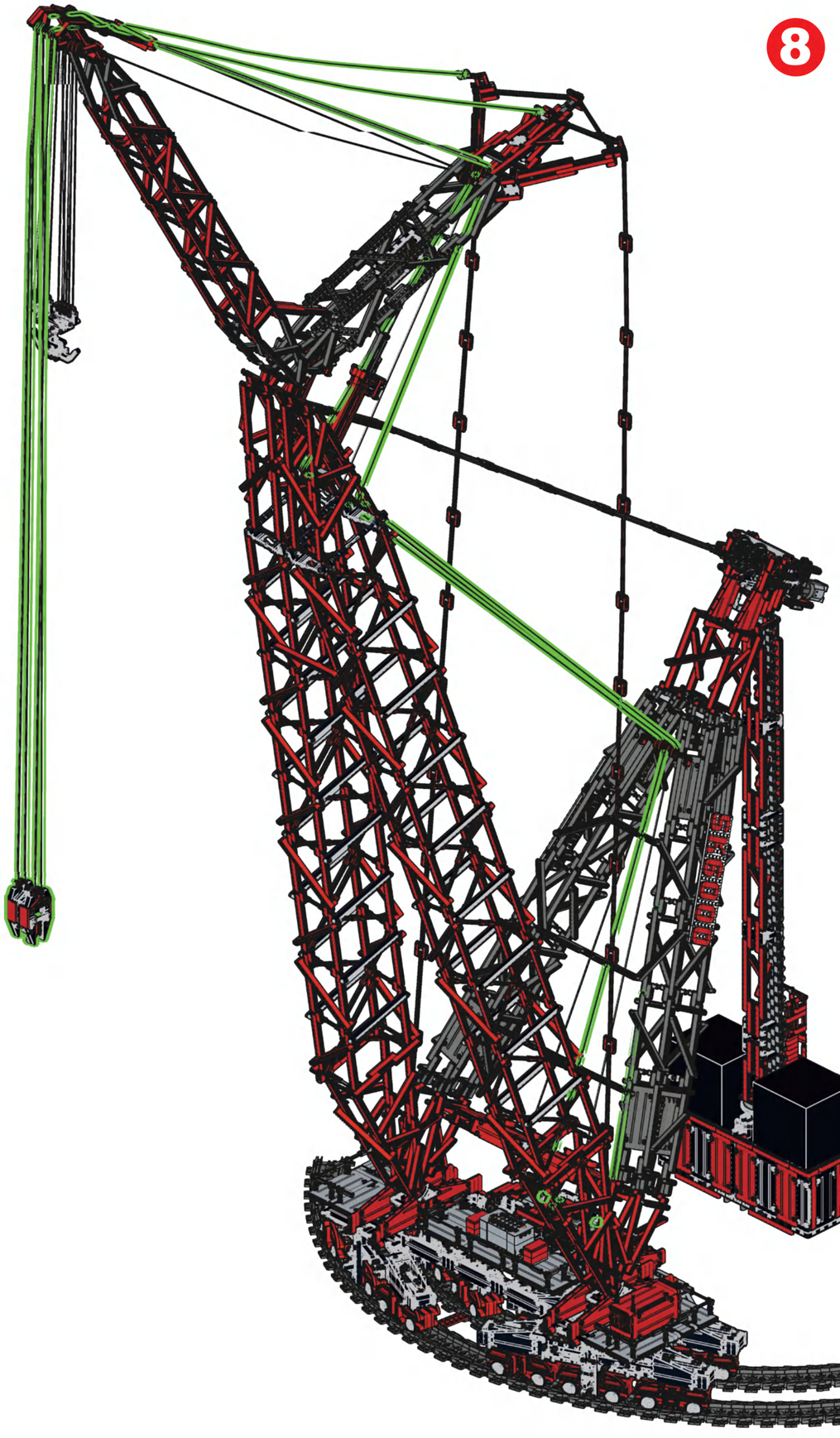

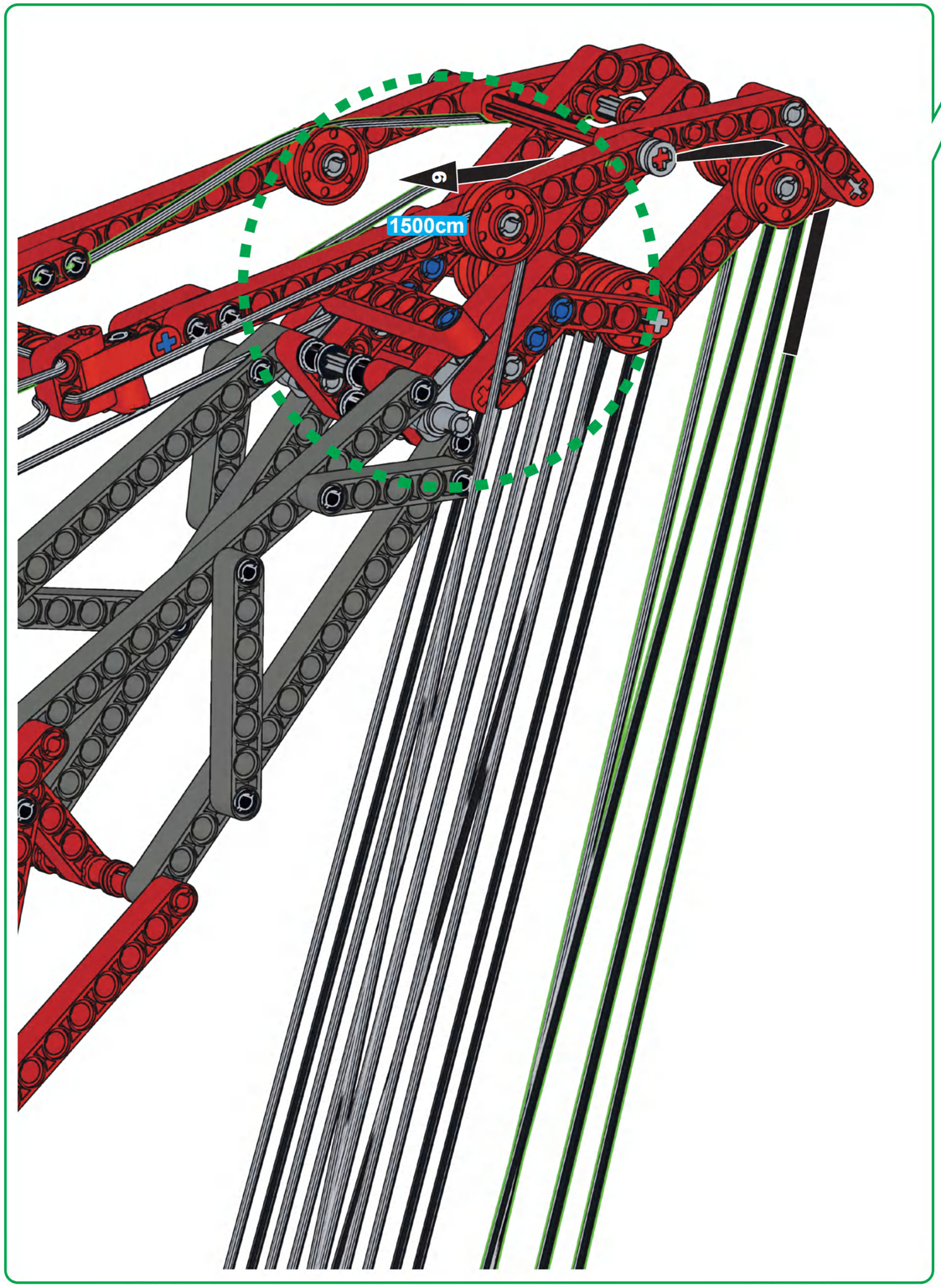
1500cm



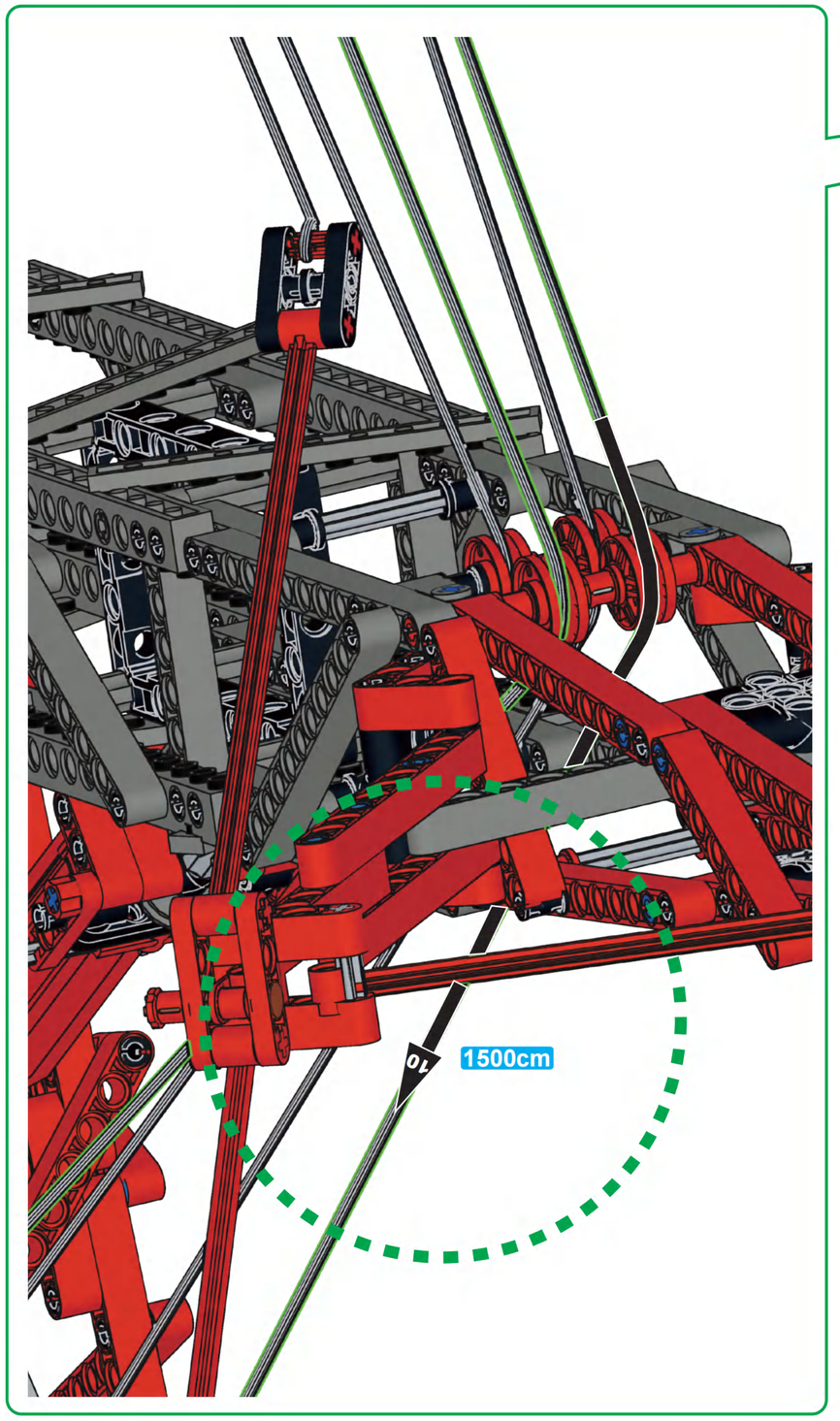
1500cm


10

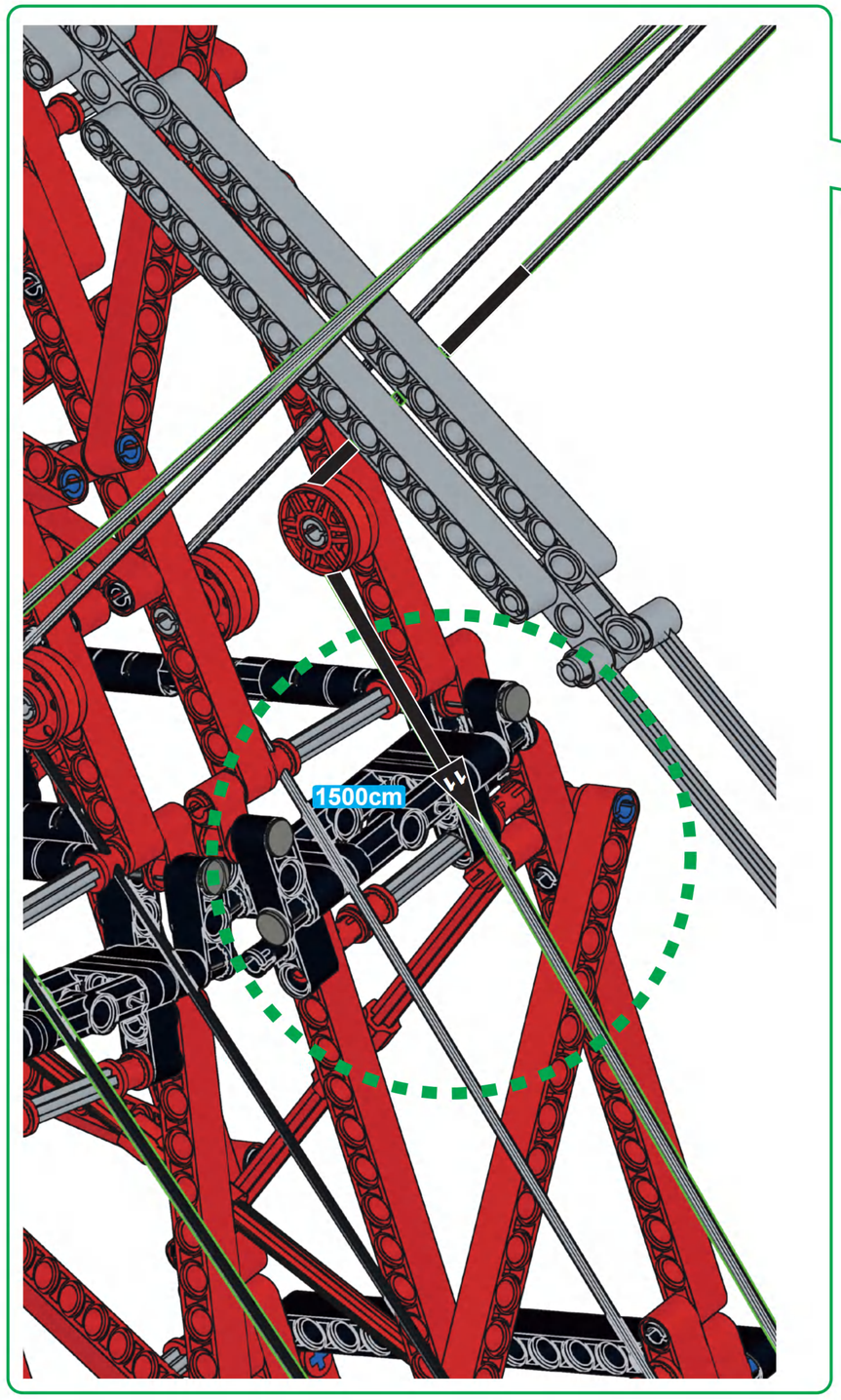
1500cm

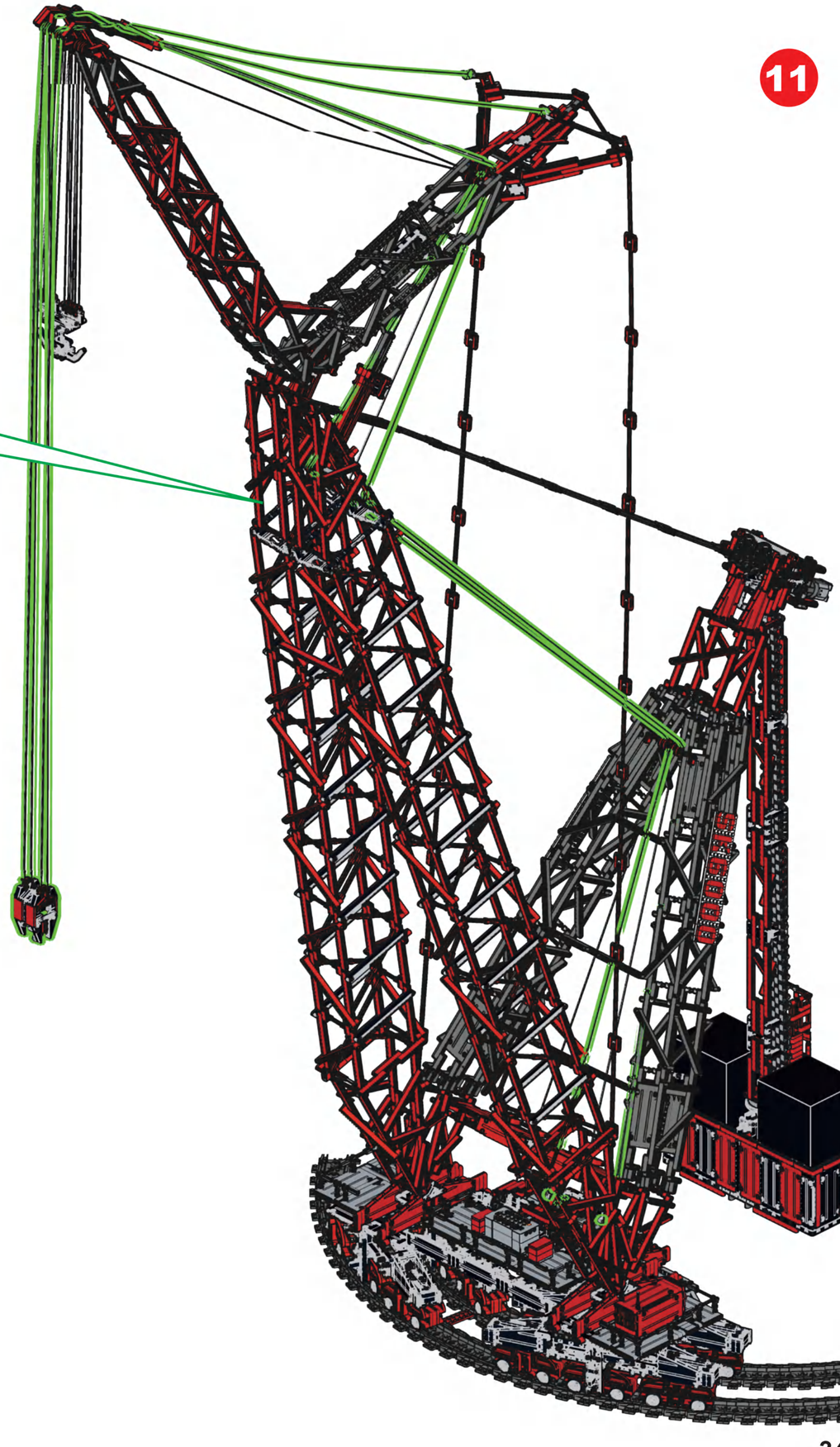

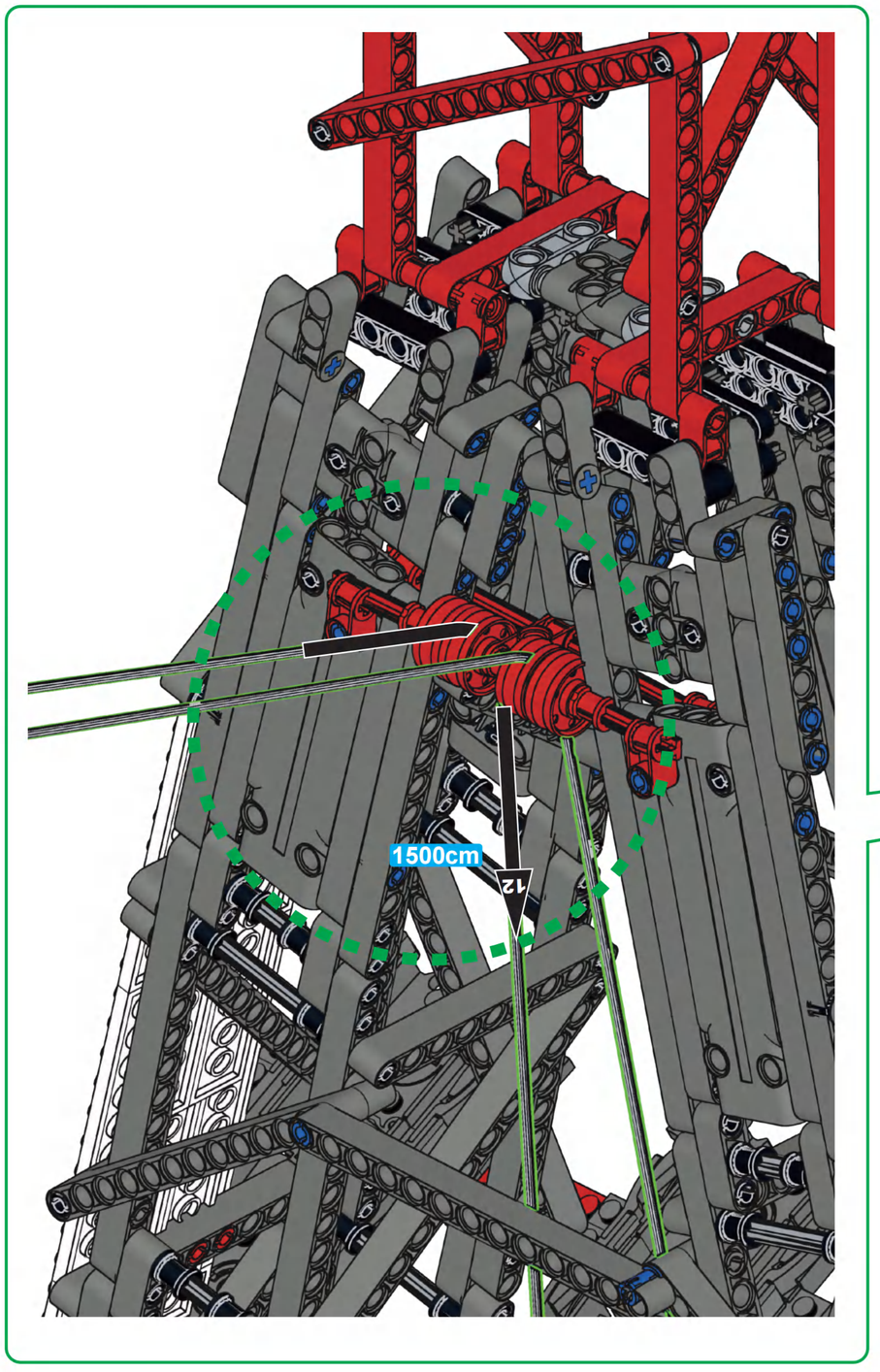
1500cm
12

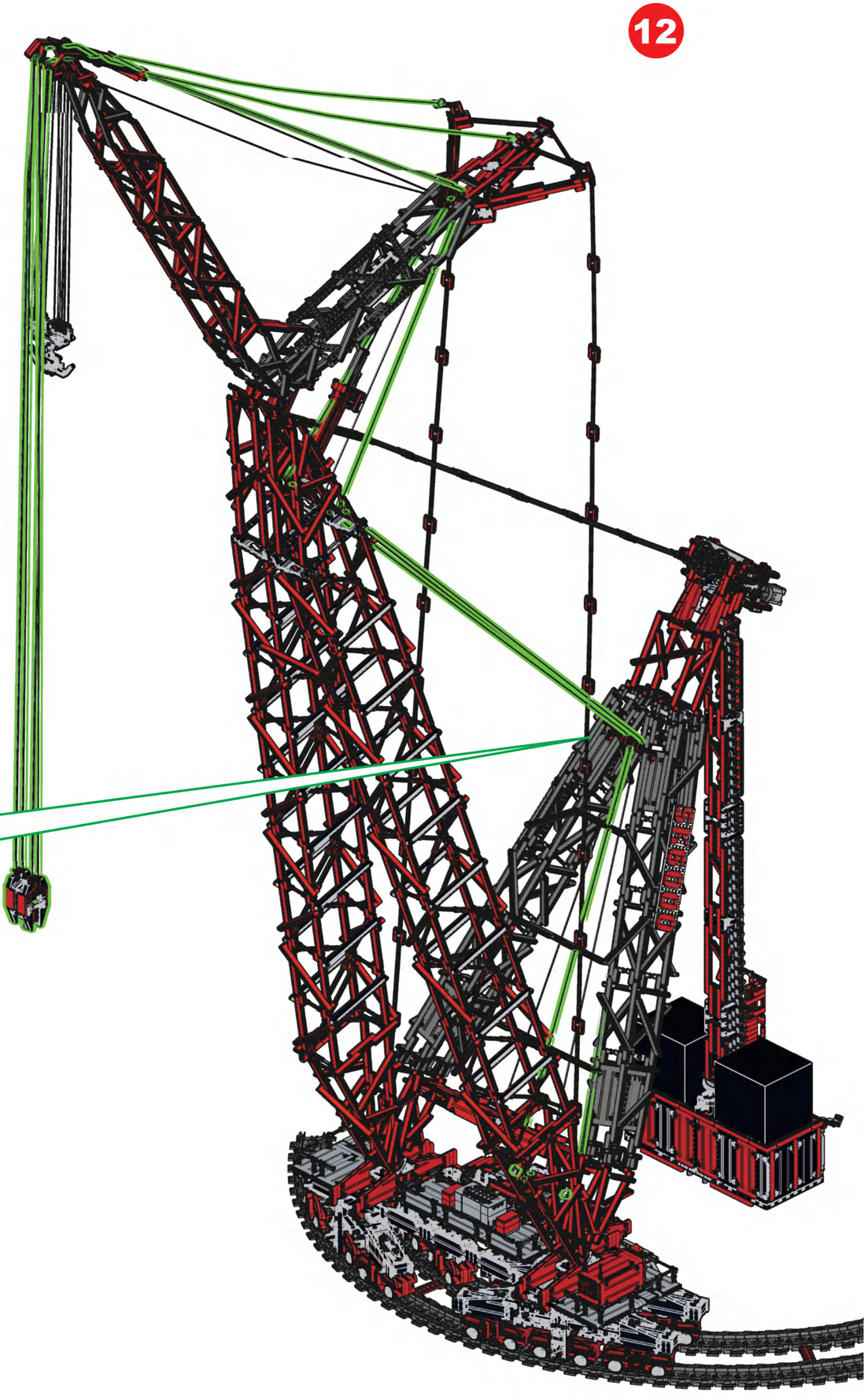
12

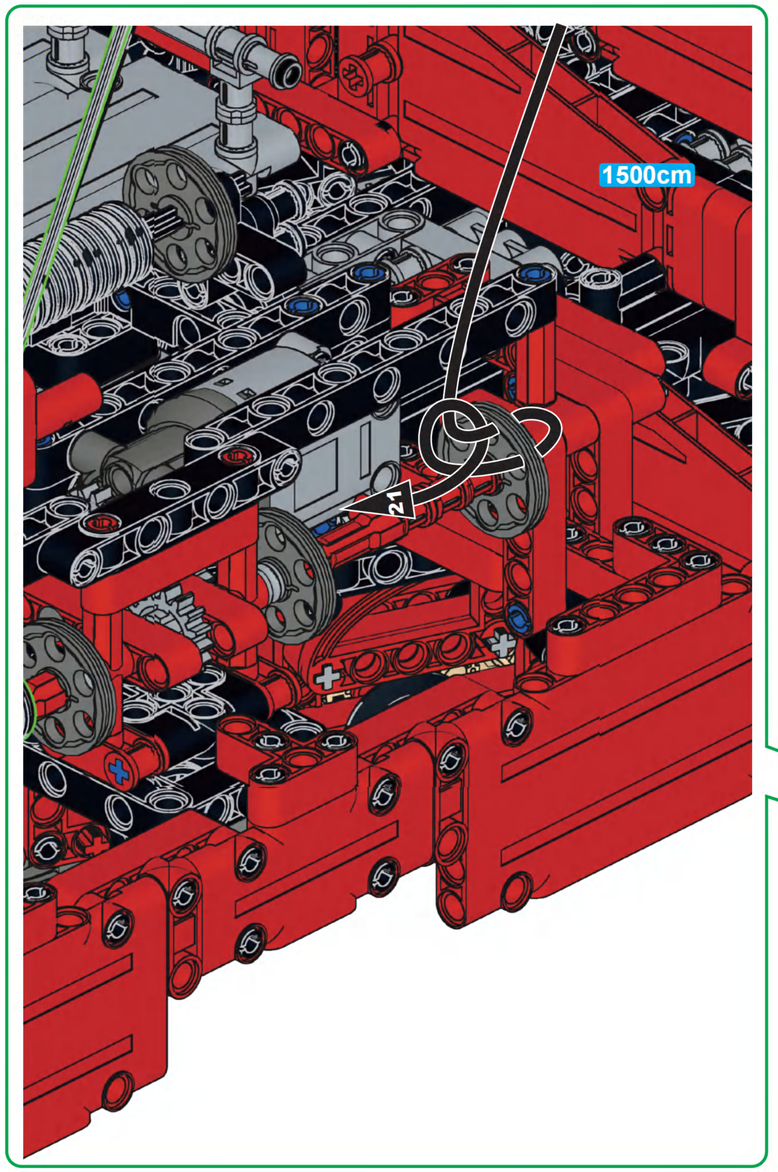
1500cm
2

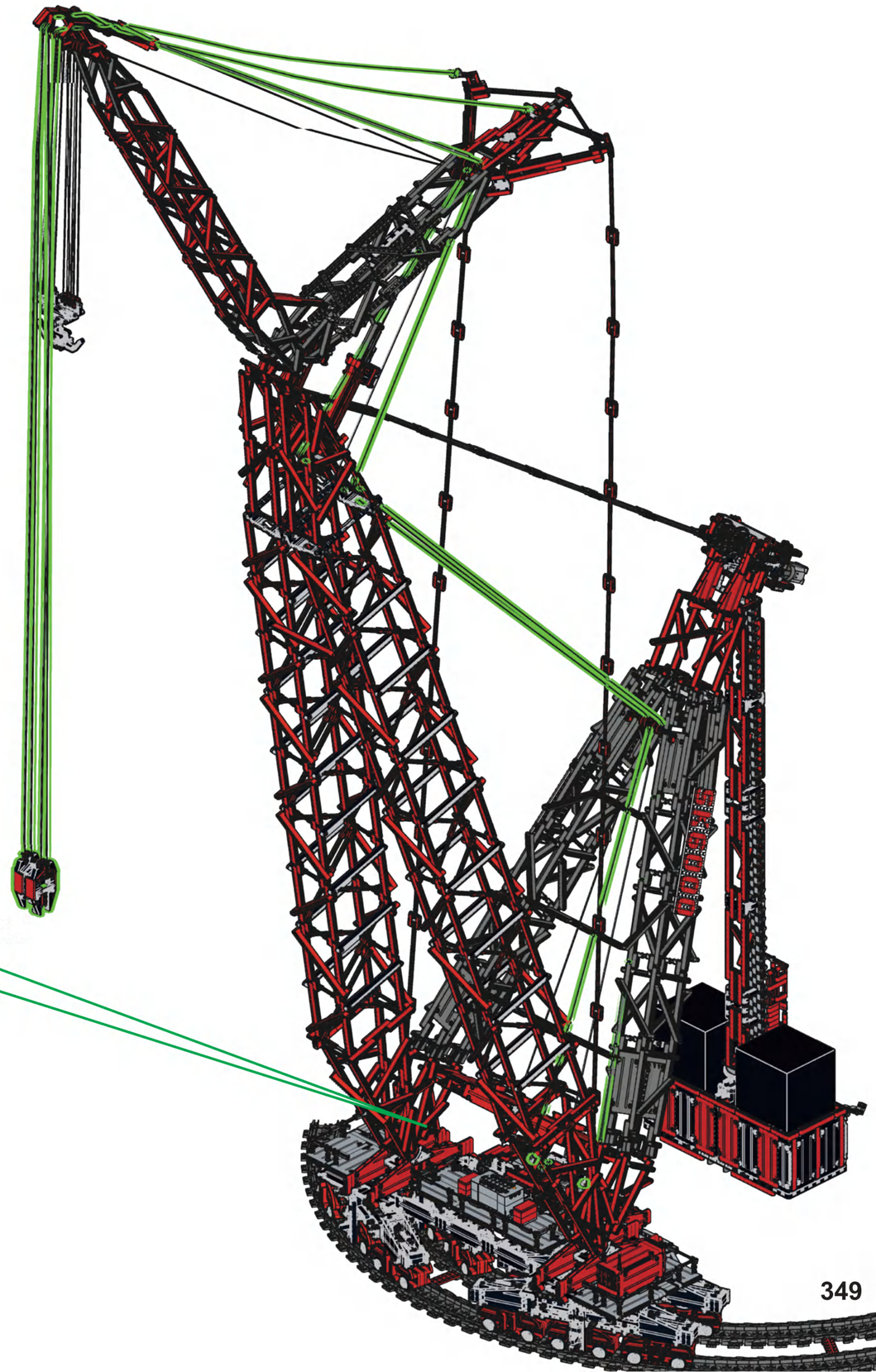

T46

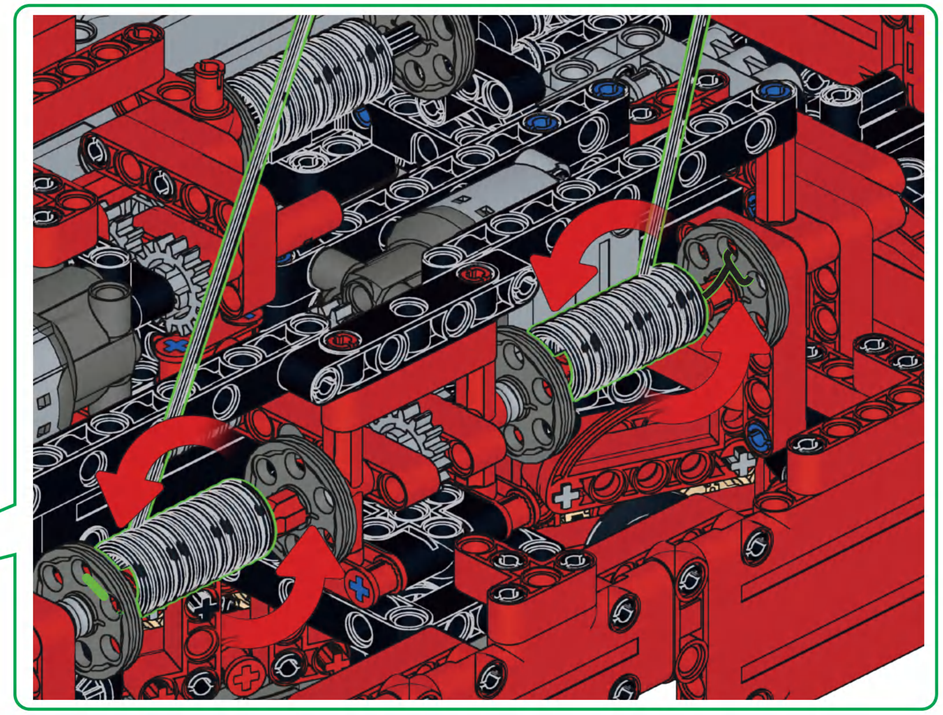

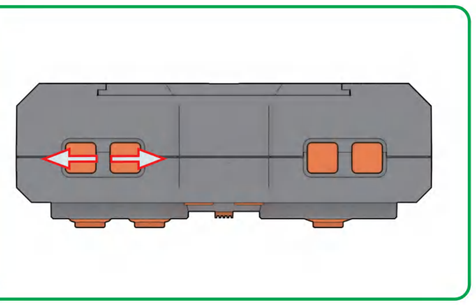

2KG

You need to prepare a weight of more than 2kg by yourself

T47

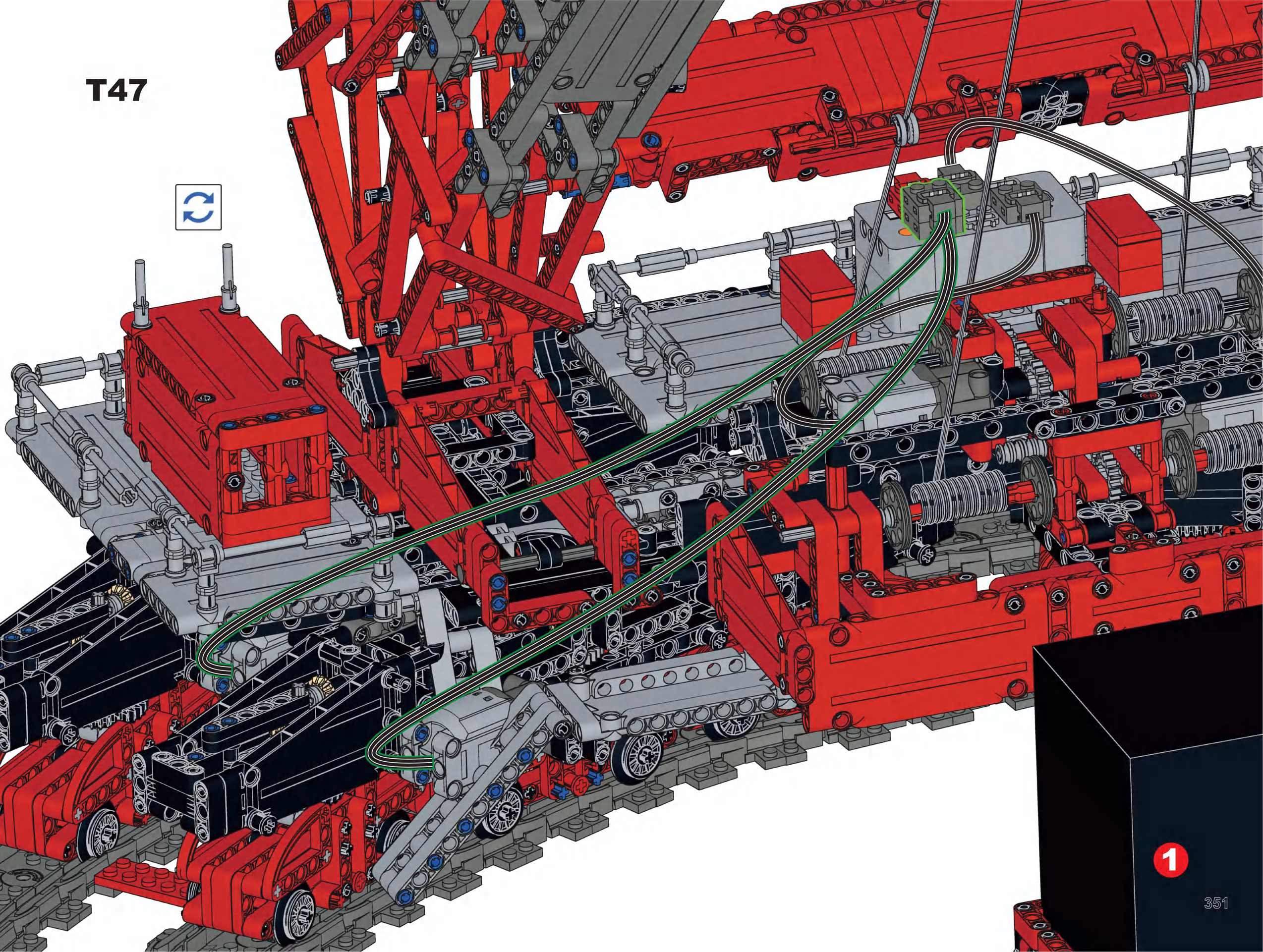

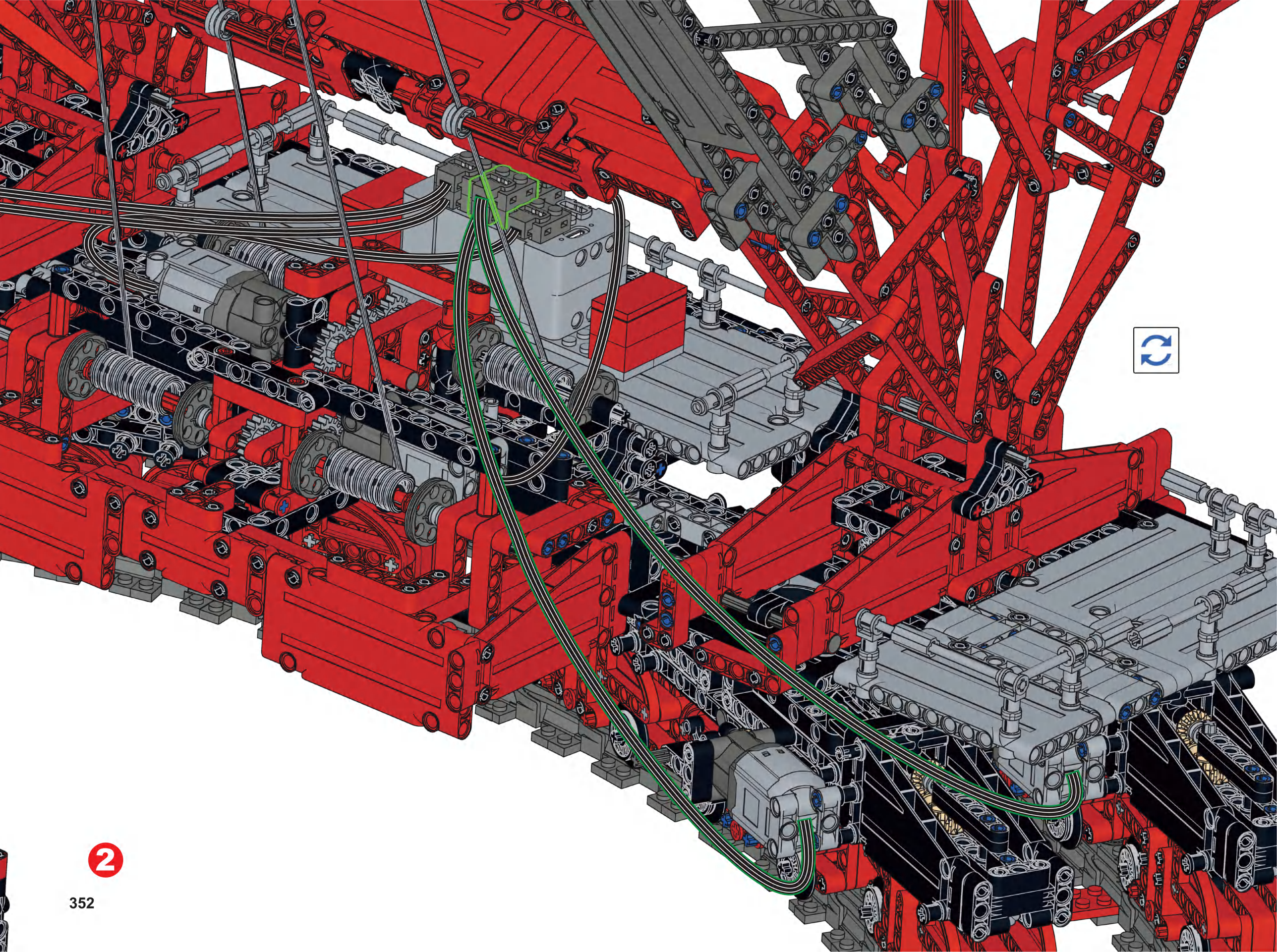


2KG

1



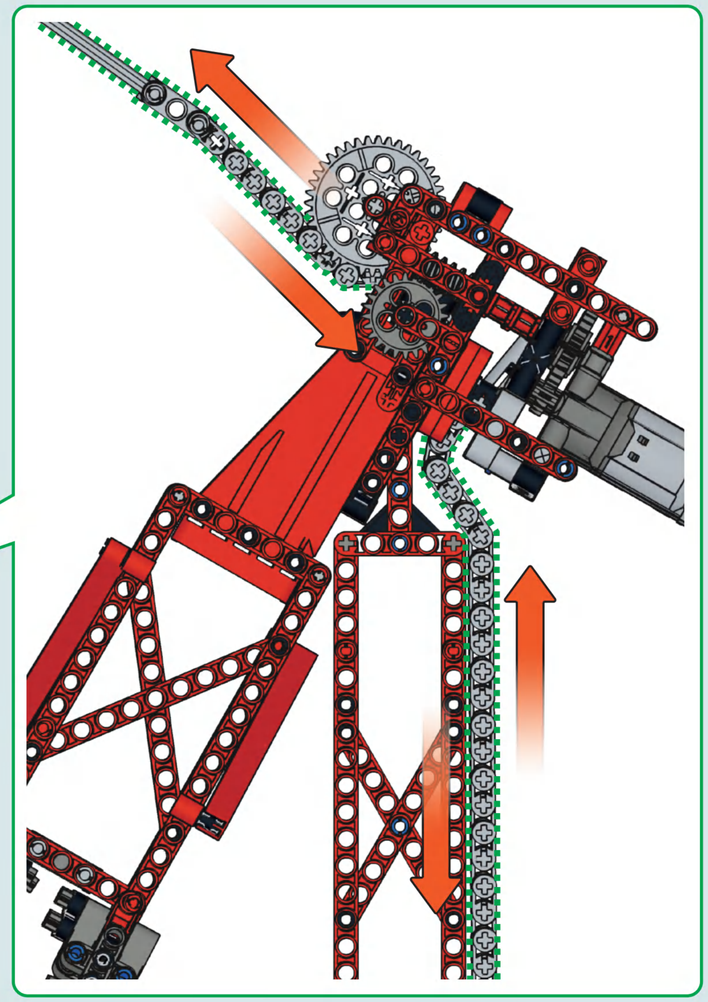

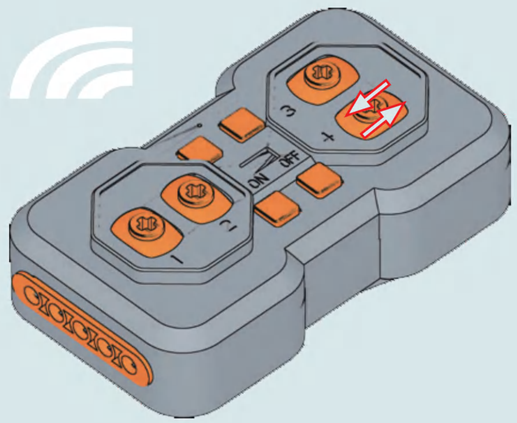

2

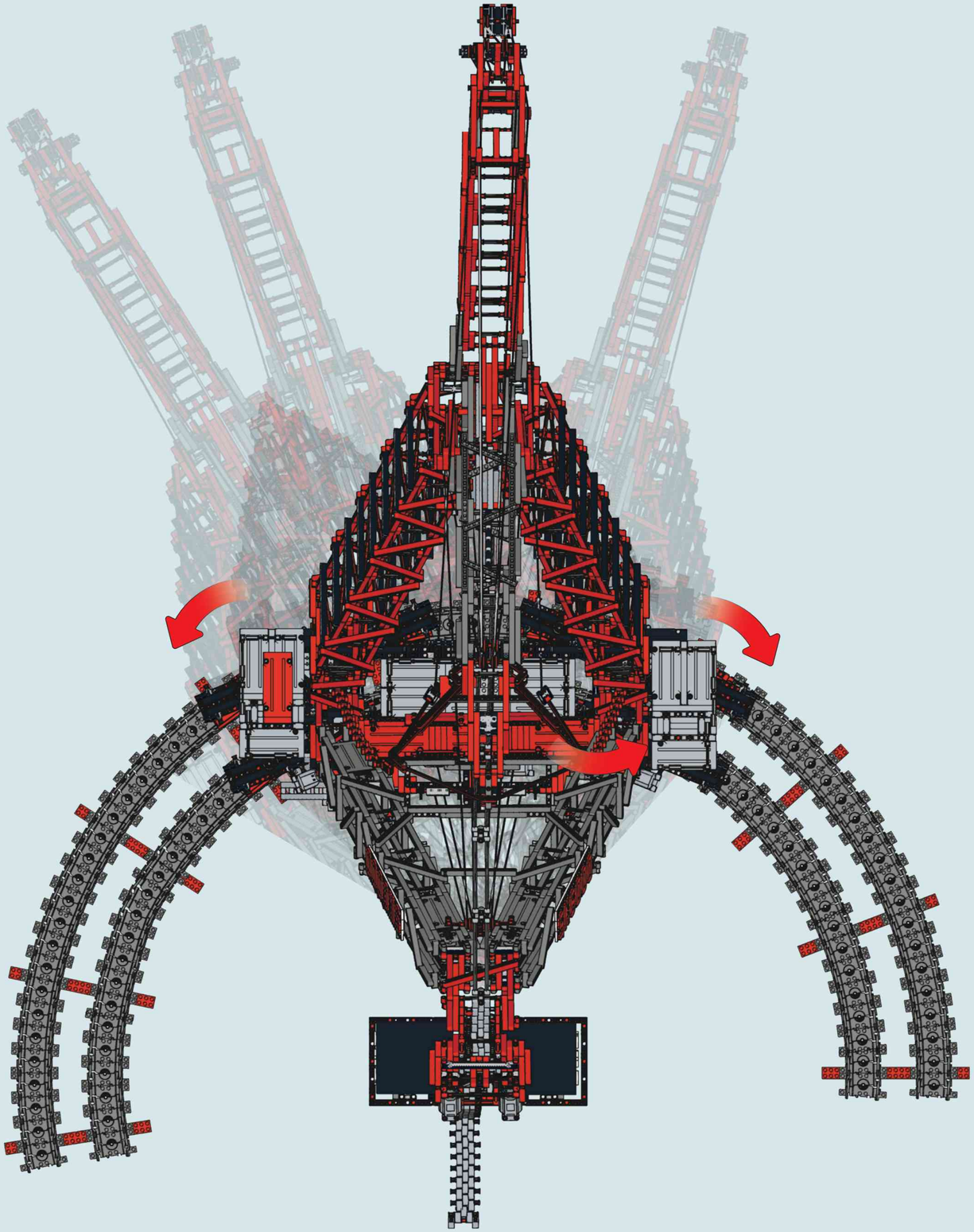

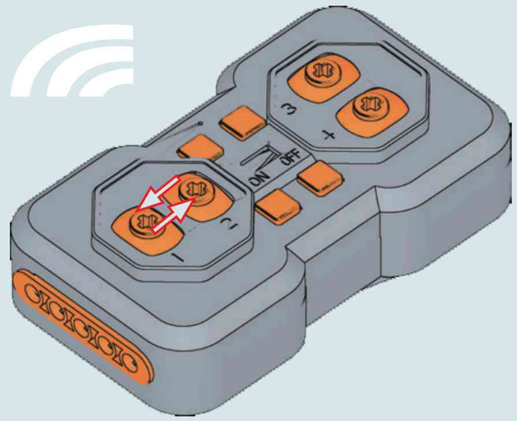

3

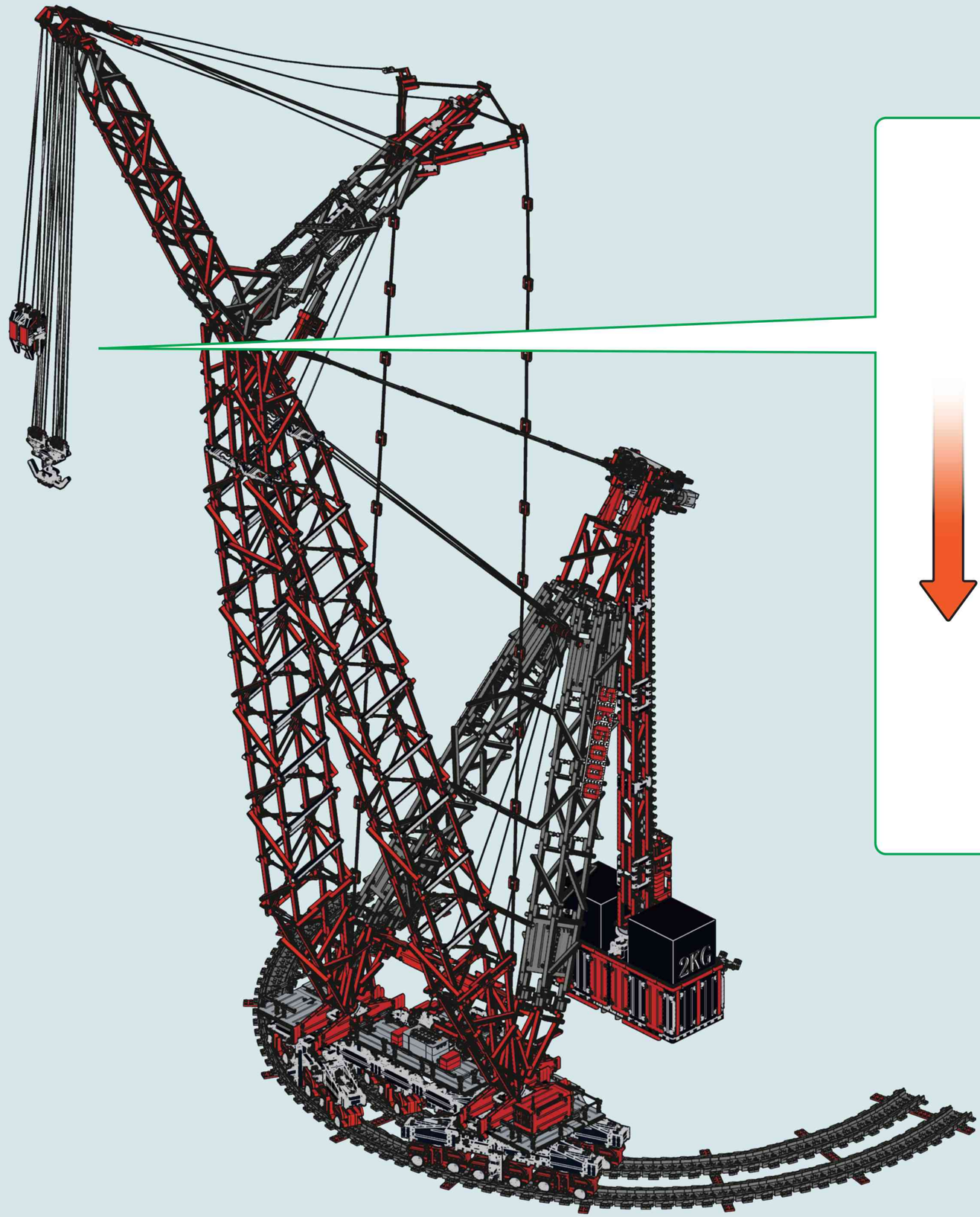

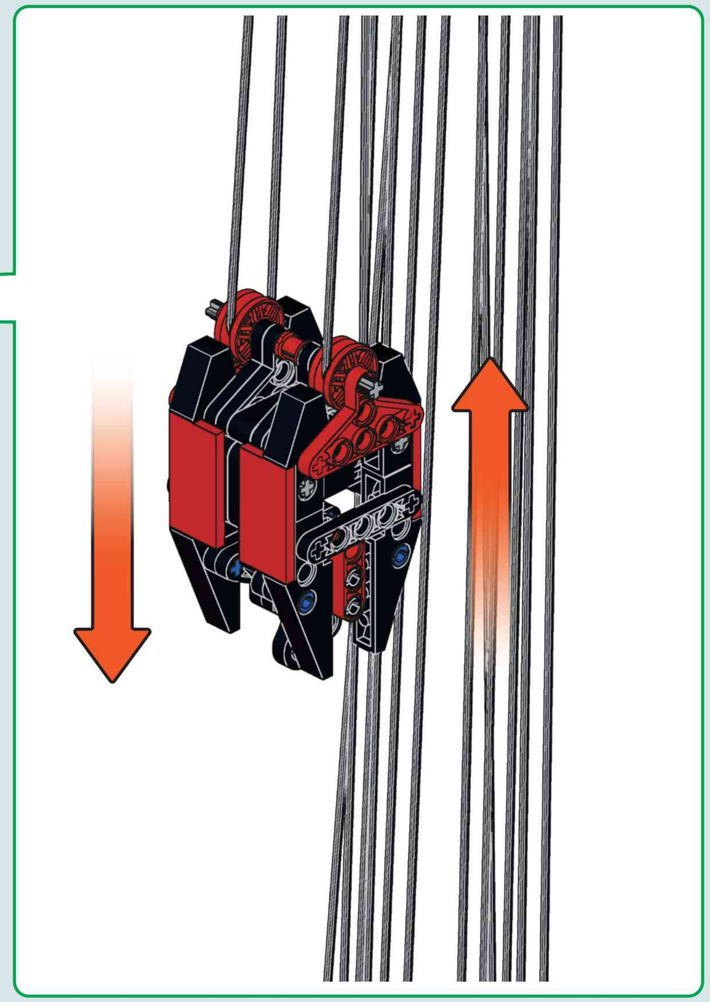

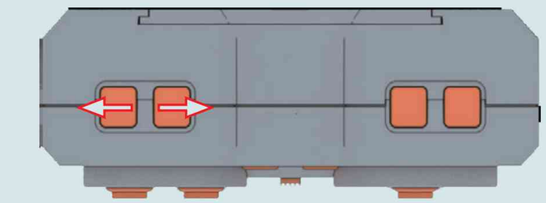

4

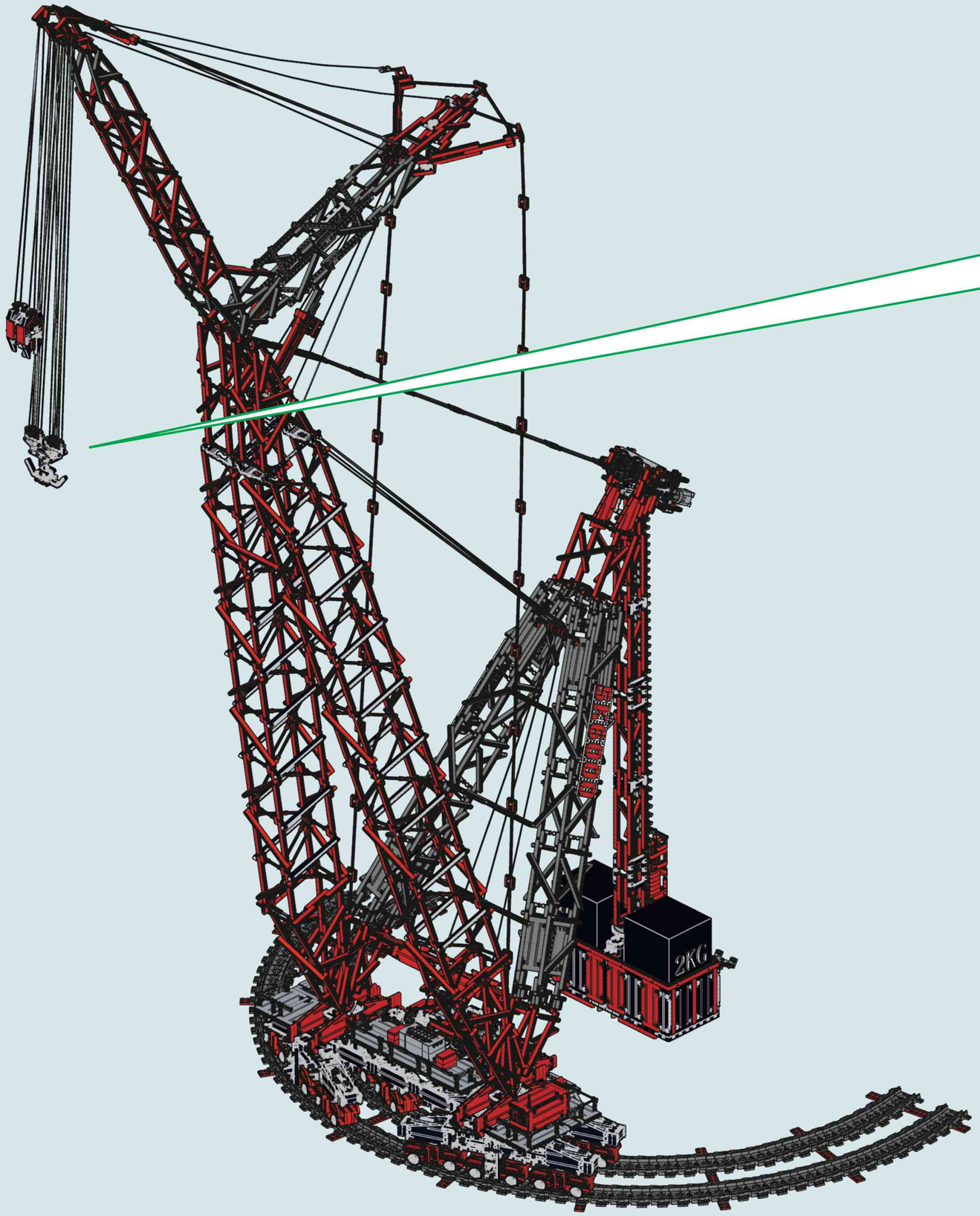

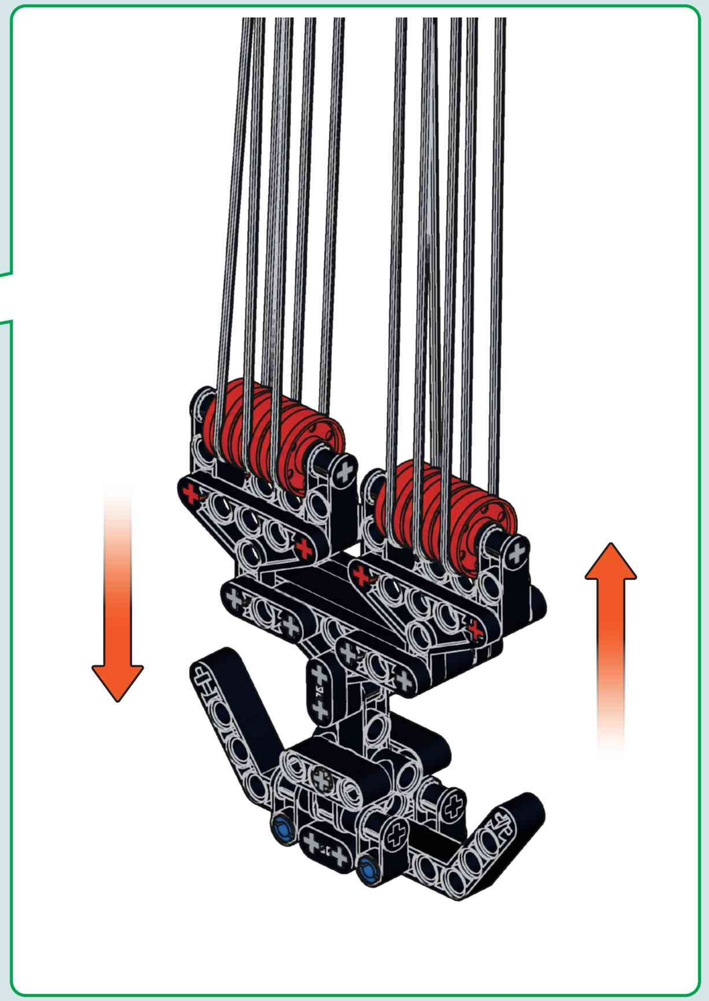

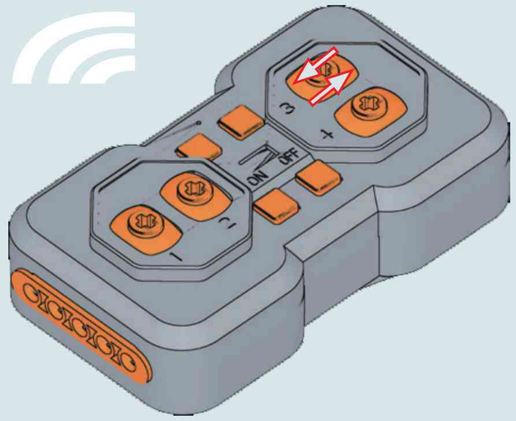


10x
1424x
2x
96x
18x
12x
11x
24x
8x
1x
1x
13x
1x
4x
2x
34x
24x
1x
16x
214x
16x
14x
13x
53x
4x
21x
4x
4x
4x
2x
39x
3
12x
52x
23x
10x
4x
29x
5
49x
9x
14x
16x
22x
16x
1x
16x
67x
6
4x
2x
1x
13x
7
6x
20x
12x
9
1x
9
4x
11
5x
7x
14x
2x
11
16x
8x
10x
13
9x
1x
16x
15
37x
16
7x
5x
8x
1x
7000cm
2x
10x
8x
24x
2x
5x
2x
32x
36x
6x

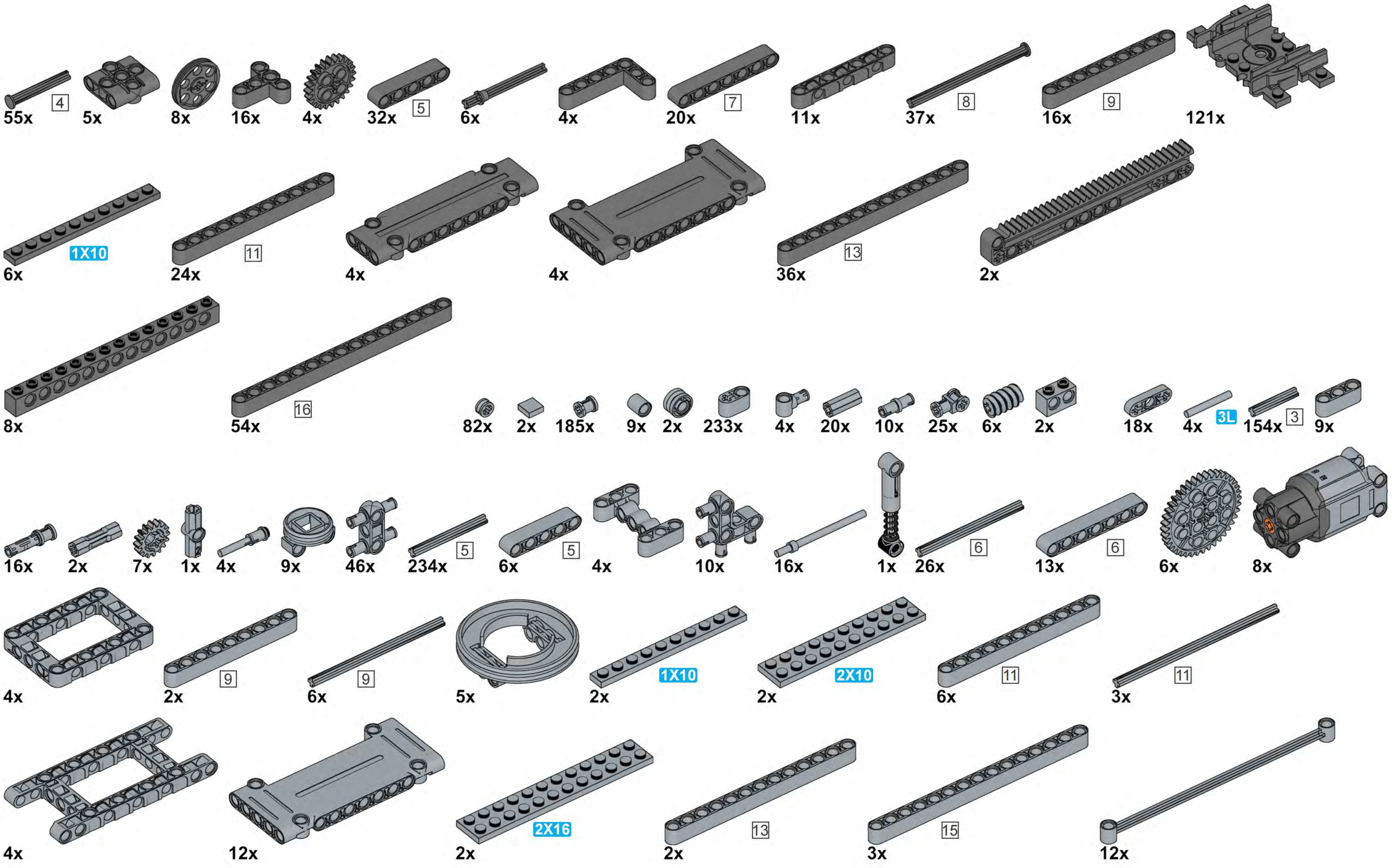
55x 4
5x
8x
16x
4x
32x 5
6x
4x
20x 7
11x
37x 8
16x 9
121x
6x 1X10
24x 11
4x
4x
36x 13
2x
8x
54x 16
82x
2x
185x
9x
2x
233x
4x
20x
10x
25x
6x
2x
18x
4x 3L
154x 3
9x
16x
2x
7x
1x
4x
9x
46x
234x 5
6x 5
4x
10x
16x
1x
26x 6
13x 6
6x
8x
4x
12x
2x 2X16
2x 13
3x 15
12x
4x 9
2x 9
6x 9
5x
2x 1X10
2x 2X10
6x 11
3x 11

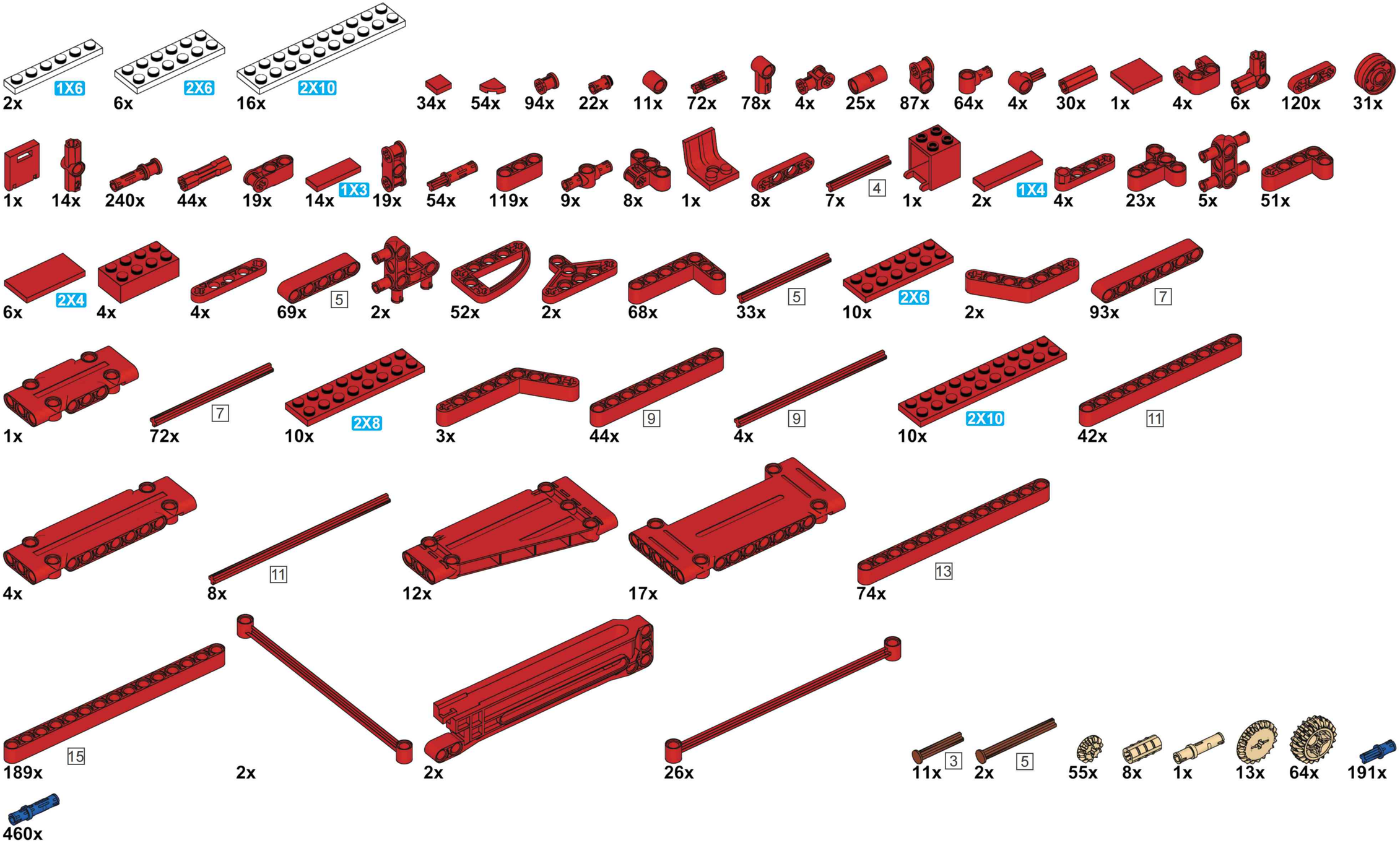
2x 1X6
6x 2X6
16x 2X10
34x
54x
94x
22x
11x
72x
78x
4x
25x
87x
64x
4x
30x
1x
4x
6x
120x
31x
1x
14x
240x
44x
19x
14x 1X3
19x
54x
119x
9x
8x
1x
8x
7x 4
1x
2x 1X4
4x
23x
5x
51x
6x 2X4
4x
4x
69x 5
2x
52x
2x
68x
33x 5
10x 2X6
2x
93x 7
1x
72x 7
10x 2X8
3x
44x 9
4x 9
10x 2X10
42x 11
4x
8x 11
12x
17x
74x 13
189x 15
2x
2x
26x
11x 3
2x 5
55x
8x
1x
13x
64x
191x
460x

Reobrix

NO.22028

MECHANICAL

Sk6000